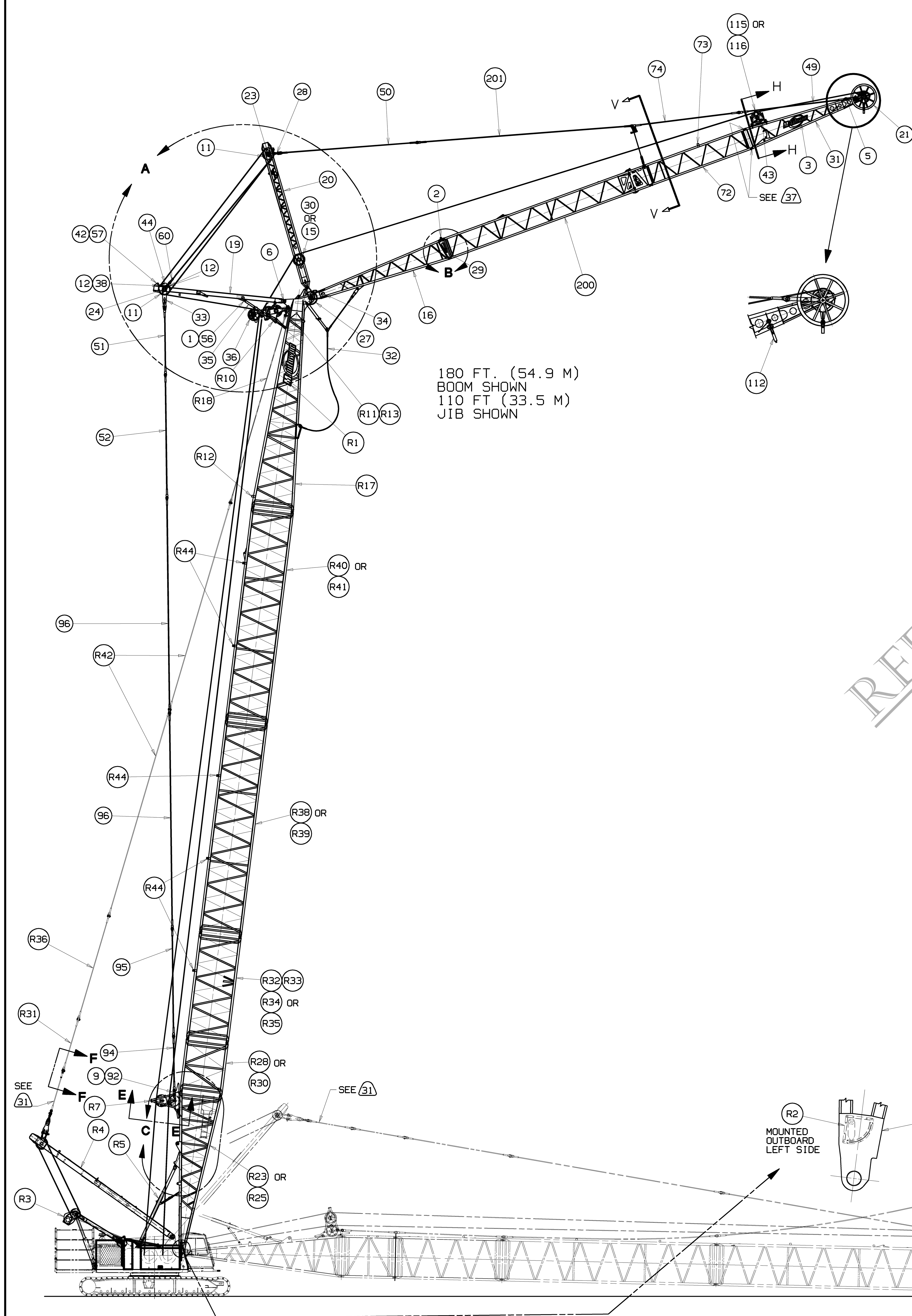

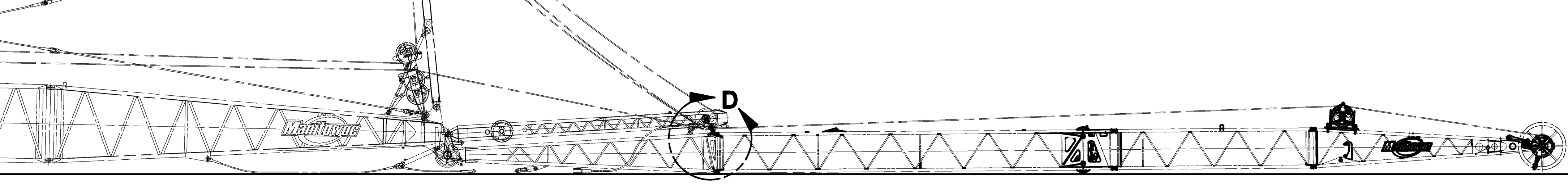

REFERENCE BOOM PARTS LIST (BOOM RIGGING ASSEMBLY #22EL WITH STOWABLE PENDANTS)

	Item	No. Reqd	Description	Code No.	Sec.
	R1		BOOM SIGN	A02735	
	R2		BOOM ANGLE INDICATOR ASSEMBLY	168779	
	R3		GANTRY ASSEMBLY	176396	
	R4		MAST ASSEMBLY	196381	
	R5		BOOM STOP ASSEMBLY	176601	
	R6		TIMBER	176831	
	R7		WIRE ROPE GUIDE ASSEMBLY	196383	
	R8		LOWER BOOM POINT SHAFT ASSEMBLY	177042	7
	R9		BOOM BUTT SUPPORT ASSEMBLY	177055	
	R10		WIRE ROPE GUIDE ASSEMBLY	177191	
	R11		PENDANT LINK	177209	
	R12		TIMBER (TOP)	177236	
	R13		PIN	177242	
	R14		WIRE ROPE GUIDE ASSEMBLY	177349	25
	R15		BOOM ASSEMBLY LADDER STORAGE	177969	
	R16		DRUM SHAFT ASSEMBLY - AUXILIARY	179491	25
	R17		BOOM TOP 40 FT. #22L	196142	6
	R18		PENDANT BASIC 36 FT.-6.00 (11.1 M)	277425	12
	R19		CLAMP	345678	
	R20		SCREW CAP HEX .50-13UNC X 5.50 LG.	612583	
	R21		WASHER FLAT .50	709460	
	R22				
OR	R23		BOOM BUTT #22E	176967	5, 26
OR	R24		BOOM BUTT #22E (AUX. DRUM)	177290	25
OR	R25		MOD. TO BOOM BUTT #22E (176967)	421262	52
OR	R26		MOD. TO BOOM BUTT #22E (177290)	421256	25, 52
	R27				
OR	R28		INSERT 10 FT. (3.05M) #22	33407-3	17, 19
OR	R29		INSERT 10 FT. (3.05M) #22E (AUX. DRUM)	177291	25
OR	R30		INSERT 10 FT. (3.05M) #22E	178758	47
	R31		PENDANT 10 FT. (3.05M)	276861	11, 19
OR	R32		INSERT 20 FT.(6.10M)#22(W/O JIB BKSTY)	33426-3	18, 19
OR	R33		INSERT 20 FT.(6.10M)#22E(W/O JIB BKSTY)	178757	47
OR	R34		INSERT 20 FT.(6.10M)#22(W/JIB BACKSTAY)	623580	18, 19
OR	R35		INSERT 20 FT.(6.10M)#22E(W/JIB BACKSTAY)	178794	47
	R36		PENDANT 20 FT.-1.5 (6.13M)	277426	11, 19
	R37				
OR	R38		INSERT 40 FT.(12.19M)#22(W/O JIB BKSTY)	50609-2	53
OR	R39		INSERT 40 FT.(12.19M)#22E(W/O JIB BKSTY)	178756	47
OR	R40		INSERT 40 FT.(12.19M)#22(W/JIB BKSTY)	623526	53
OR	R41		INSERT 40 FT.(12.19M)#22E(W/JIB BKSTY)	178793	47
	R42		PENDANT 40 FT.-3.0 (12.27M)	277427	11, 19
	R43				
OR	R44		TIMBER	192013	
OR	R45		TIMBER	192014	46
	R46				
	R47				
	R48				
	R49				
	R50				

REFERENCE ONLY!

BILL OF MATERIAL

	Item No.	No. Reqd	Sec-tion	Description	Length In.	Material	Code No. or Dwg. No	△
	BASIC JIB 110 FT. (33.5M) CONT.							
	INSERT 40 FT. (12.19) ASSEMBLY WITH INTERMEDIATE FALL							
	200	1		INSERT 40 FT.(12.19M) ASSEMBLY			A07059	27
	201	2		PENDANT 40 FT.-3.00 (12.27M)			277384	24
	202							
	203							
	204							
	205							
	INTERMEDIATE SUSPENSION FOR INTERMEDIATE FALL							
	206	2		PIN			179959	
	207	6		PIN			196297	
	208	1		LINK ASSEMBLY			A07324	
	209	2		PIN			A07330	61
	210	2		PIN			A07332	62
	211	2		COLLAR			A07451	
	212	2		PENDANT 78.0 IN (1.98M)			A07776	63
	213	2		PENDANT 21.0 IN (.53M)			A07777	64
	214	2		LINK			A07778	
	215	1		BEAM			A07779	
	216							
	217							
	218							
	219							
	220							
	LINKS & PINS - JIB BACKSTAY BOOM LENGTHS 100-130 FT. (30.5-39.6M)							
	86	2		PIN			170690	22
	87	2		PENDANT LINK 24.00 (610mm)			177553	22, 30
	88							
	LINKS & PINS - JIB BACKSTAY BOOM LENGTHS 70-90 FT. (21.3-27.4M)							
	89	2		PENDANT LINK 39.00 (991mm)			177569	30
	90	2		PENDANT 10 FT.-1.00 (3.07M)			277382	24, 41
	91							
	LINKS - JIB BACKSTAY BOOM LENGTHS 100-200 FT. (30.5-61.0M)							
	92	2		PENDANT LINK 11.00 (279mm)			177570	30
	93							
	PENDANT 10 FT. - 1.00 (3.07M) JIB BACKSTAY FOR USE WITH 10 FT. BOOM INSERT							
	94	2		PENDANT 10 FT.-1.00 (3.07M)			277382	24
	PENDANT 20 FT. - 1.50 (6.13M) JIB BACKSTAY FOR USE WITH 20 FT. BOOM INSERT							
	95	2		PENDANT 20 FT.-1.50 (6.13M)			277383	24
	PENDANT 40 FT. - 3.00 (12.27M) JIB BACKSTAY FOR USE WITH 40 FT. BOOM INSERT							
	96	2		PENDANT 40 FT.-3.00 (12.27M)			277384	24
	97							
	98							
	99							
	WIRE ROPE FOR REAR HOIST DRUM							
	100	1		1.00 X 850 FT.WIRE ROPE-CONSTRUCTEX			719394	34
	1.00 WIRE ROPE FOR REAR HOIST DRUM							
	101	1		1.00 X 850 FT. WIRE ROPE - PYTHON			719395	35
	26mm WIRE ROPE FOR REAR HOIST DRUM							
	102	1		26mm X 850 FT. WIRE ROPE - PYTHON			719396	36
	OPTIONAL JIB PARTS LIST							
	SHEAVE, SHAFT & CLAMPS FOR USE WITH OPT. AUX. DRUM							
	103	5		CLAMP			174844	
OR	104	1		SHEAVE ASSEMBLY			176799	
OR	105	1		ROPE GUARD CLAMP			177223	
OR	106	1		SHAFT			177455	
OR	107	12		NUT ST. HEX .625-11UNC			546058	
OR	108	2		PIN - HITCH .88 X 7.00 LG.			563699	
OR	109	6		SCREW CAP .625-11UNC X 6.50 LG.			612691	42
OR	110	6		WASHER LOCK .625			710307	
B	111	1		SHEAVE WIRE ROPE ASSY			81007542	
	OPTIONAL JIB PARTS ASSEMBLY LIST							
	112	1		UNIV. WIRE ROPE ANCHOR JOINT ASSEM.			92046	
	113	1		WIRE ROPE GUIDE ASSEMBLY			177364	39
	114	1		WIRE ROPE SUPPORT ASSEMBLY			179027	51
OR	115	1		W.R.GUIDE SINGLE SHEAVE BRACKET ASM			179380	56
OR	116	1		W.R.GUIDE DOUBLE SHEAVE BRACKET ASM			179381	57
	117	1		WIRE ROPE WINCH ASSEMBLY			179383	55
	118							
	119							
	120							

BILL OF MATERIAL

	Item No.	No. Reqd	Sec-tion	Description	Length In.	Material	Code No. or Dwg. No	△
	BASIC JIB 110 FT. (33.5M)							
	1	1		PIN			13368	
	2	2		PIN			14902-3	
	3	2		BOOM SIGN			A02743	
	4	1		PIN			75368	
	5	2		PENDANT PIN			137919	29
	6	2		PIN			143491	
	7	6		PIN KEEPER			169810	
	8	4		SPACER			170677	
	9							
	10	2		SPACER			171554	
	11	8		SHEAVE ASSEMBLY			171693	
	12	4		PIN			172937	
	13	4		CLAMP			174844	
	14	2		PIN			176155	
OR	15	1		SHEAVE ASSEMBLY			176799	
OR	16	1		27 FT. BUTT			177053	
OR	17	10		SLEEVE			177107	
OR	18	10		WASHER			177108	
OR	19	1		MAIN STRUT			177439	
OR	20	1		JIB STRUT			177443	
OR	21	1		JIB POINT ROLLER ASSEMBLY-2 SHEAVE			177448	
OR	22	1		SHAFT			177456	
OR	23	1		SHAFT			177457	
OR	24	1		SHAFT			177458	
OR	25	1		SPACER			177471	
OR	26	1		SPACER			177472	
OR	27	2		PIN			177479	
OR	28	1		LINK SUB-ASSEMBLY			177481	
OR	29	1		ADAPTER ASSEMBLY			177493	
A	30	1		SHEAVE WIRE ROPE ASSY			81007542	
	31	1		23 FT. TOP			177560	4
	32	1		JIB STOP ASSEMBLY			177561	
	33	1		LINK SUB-ASSEMBLY			177565	
	34	1		JIB STOP & ANGLE IND. ASSEM. (AUTO)			177573	
	35	2		STRUT STOP TUBE ASSEMBLY			177590	
	36	1		WIRE ROPE GUIDE ASSEMBLY			177612	
	37	2		CLAMP			177633	
	38	2		STRUT			177634	
	39	1		24.00 DIA. SHEAVE ASSEMBLY			177636	
	40	1		LINK			177639	
	41	1		ROLLER			177640	
	42	1		SHAFT			178149	
	43	1		WIRE ROPE GUIDE FRAME ASSEMBLY			179379	54
	44	1		LINK SUB-ASSEMBLY			179958	
	45	2		BAR - .50 X 1.00 X 6.00 LG.			221009	42
	46	4		BEARING LOCKNUT			225105	13
	47	2		BEARING LOCKWASHER			225111	
	48	1		PENDANT 11 FT.-3.00 (3.43M)			277241	
	49	2		PENDANT 20 FT.-1.50 (6.13M)			277383	23
	50	2		PENDANT 25 FT.-11.00 (7.90M)			277437	9, 28
	51	2		PENDANT 12 FT.-3.00 (3.73M)			277439	10, 20
	52	2		PENDANT 23 FT. (7.01M)			277440	8, 30
	53	12		NUT ST. HEX .625-11UNC			546058	
	54	1		PIN COTTER STEEL .375 X 3.00 LG.			562150	
	55	2		PIN - HITCH .88 X 7.00 LG.			563699	
	56	3		ROLLER			602162	
	57	1		ROLLER			602170	
	58	2		SCREW CAP HEX .625-11UNC X 6.00 LG.			612689	40
	59	4		SCREW CAP .625-11UNC X 6.50 LG.			612691	40
	60	1		WEDGE/SOCKET ASSEMBLY 1.00 WIRE ROPE			646246	
	61	6		WASHER LOCK .625			710307	
	62	10		SHIM			A00038	60
	63							
	64							
	65							
	INSERT 10 FT. (3.05M)							
	66	4		BOOM JOINT PIN			70366	22
	67	1		INSERT 10 FT. (3.05M)			180136	19
	68	1		TIMBER			192022	22
	69	2		PENDANT 10 FT.-1.00 (3.07M)			277382	24
	70							
	INSERT 20 FT. (6.10M)							
	71	4		BOOM JOINT PIN			70366	22
	72	1		INSERT 20 FT. (6.10M)			180137	19
	73	1		TIMBER			192022	22
	74	2		PENDANT 20 FT.-1.50 (6.13M)			277383	24
	75							
	INSERT 40 FT. (12.19M) WITHOUT JIB BACKSTAY LUGS							
	76	1		INSERT 40 FT. (12.19M)			48208-2	19
	77	4		BOOM JOINT PIN			70366	22
	78	2		TIMBER			192022	22
	79	2		PENDANT 40 FT.-3.00 (12.27M)			277384	24
	80							
	INSERT 40 FT. (12.19M) WITH JIB BACKSTAY LUGS							
	81	1		INSERT 40 FT. (12.19M)			48208-3	19
	82	4		BOOM JOINT PIN			77090	22
	83	2		TIMBER			192022	22
	84	2		PENDANT 40 FT.-3.00 (12.27M)			277384	24
	85							

ASSEMBLIES USED ON

REVISIONS

03-16-09 MER
A B ADDED ITEM
C WAS SHT 1 OF 8
D UPDATED MAIN VIEW

DWG. NO. A09286
SHT 1 OF 9

PRIVATE LABELING REQUIREMENT TO CONFORM TO ENGINEERING SPECIFICATION 6829103794 FOR COMPONENTS LISTED IN GDS500-05-035

DATE 11-13-03

PATTERN NO.

THIS PRINT REMAINS THE PROPERTY OF MANITOWOC CRANES, INC. ALL INFORMATION CONTAINED THEREON IS CONFIDENTIAL. IT IS LOANED, SUBJECT TO RETURN UPON DEMAND, AND ON EXPRESS CONDITION THAT IT IS NOT TO BE COPIED OR USED DIRECTLY OR INDIRECTLY IN ANY WAY WHATSOEVER DETRIMENTAL TO OUR INTERESTS.

TOLERANCE UNLESS OTHERWISE SPECIFIED				
DECIMAL PLACES	FABRICATION ≤ 10 FEET	FABRICATION > 10 FEET	MACHINING	
(1) PLACE 0.0	±.12	±.18	±.03	√= MACHINING TOLERANCE APPLIES TO THIS DIMENSION AND/OR SURFACE
(2) PLACE 0.00	±.06	±.12	±.015	
(3) PLACE 0.000			±.005	
ANGLES	±1°30'		±0°30'	

SCALE
DR. RH
CK. RH
APP BLS
MODEL 999

Manitowoc Cranes, Inc.
Manitowoc, Wisconsin

JIB LUFFING ASSEMBLY
#22EL BOOM/#135 JIB
WITH STOWABLE PENDANTS
WITH INTERMEDIATE FALL

DWG. NO. A09286

C SHT 1 OF 9

DO NOT SCALE THIS DRAWING

BILL OF MATERIAL						
ITEM NO.	SEC-TION	DESCRIPTION	LENGTH IN	MATERIAL	CODE NO. OR DWG. NO.	

ASSEMBLIES USED ON

REVISIONS
03-16-09 MER A) WAS SHT 2 OF 8

INSERTS, PENDANTS, TIMBERS AND PINS REQ'D. FOR VARIOUS JIB LENGTHS

ITEM NO.		67	72	76 OR 81	200	69 DWG. 78145	74 DWG. 78145	79,84 OR 201 DWG. 78145	68,73, 78 OR 83	66,71, 77 OR 82
JIB LENGTHS FEET	METERS	10 FT 3.05 M INSERT	20 FT 6.10 M INSERT	40 FT 12.19 M INSERT	40 FT 12.19 M INSERT ASSY SEE 27	10 FT-1.0 3.07 M PENDANT	20 FT-1.5 6.13 M PENDANT	40 FT-3.0 12.27 M PENDANT	WIRE ROPE TIMBER	BOOM JOINT PIN
110	33.5	0	1	0	1	0	2	2	3	8
120	36.6	1	1	0	1	2	2	2	4	12
130	39.6	0	2	0	1	0	4	2	4	12
		OR 0	0	1	1	0	0	4	4	8
140	42.7	1	2	0	1	2	4	2	5	16
		OR 1	0	1	1	2	0	4	5	12
150	45.7	0	1	1	1	0	2	4	5	12
160	48.8	1	1	1	1	2	2	4	6	16
170	51.8	0	2	1	1	0	4	4	6	16
		OR 0	0	2	1	0	0	6	6	12

INSERTS, PENDANTS, AND ROLLER GUIDES REQUIRED FOR VARIOUS BOOM LENGTHS

ITEM NO.		R28,R29, OR R30	R32, R33, R34 OR R35	R38, R39, R40 OR R41	R31 DWG. 76280	R36 DWG. 76280	R42 DWG. 76280	R44 OR R45
BOOM LENGTH FEET	METERS	10 FT 3.05 M INSERT SEE 17	20 FT 6.10 M INSERT SEE 18	40 FT 12.19 M INSERT SEE 3	10 FT 3.05 M PENDANT	20 FT-1.5 6.13 M PENDANT	40 FT-3.0 12.27 M PENDANT	WIRE ROPE TIMBER
70	21.3	0	0	0	0	0	0	0
80	24.4	1	0	0	4	0	0	0
90	27.4	2	0	0	8	0	0	0
		OR 0	1	0	0	4	0	1
100	30.5	1	1	0	4	4	0	1
110	33.5	2	1	0	8	4	0	1
		OR 0	2	0	0	8	0	2
		OR 0	0	1	0	0	4	2
120	36.6	1	2	0	4	8	0	2
		OR 1	0	1	4	0	4	2
130	39.6	2	0	1	8	0	4	2
		OR 0	1	1	0	4	4	3
140	42.7	1	1	1	4	4	4	3
150	45.7	2	1	1	8	4	4	3
		OR 0	2	1	0	8	4	4
		OR 0	0	2	0	0	8	4
160	48.8	1	2	1	4	8	4	4
		OR 1	0	2	4	0	8	4
170	51.8	2	0	2	8	0	8	4
		OR 0	1	2	0	4	8	5
180	54.9	1	1	2	4	4	8	5
190	57.9	2	1	2	8	4	8	5
		OR 0	2	2	0	8	8	6
		OR 0	0	3	0	0	12	6
200	61.0	1	2	2	4	8	8	6
		OR 1	0	3	4	0	12	6

JIB BACKSTAY PENDANTS, LINKS & PINS REQUIRED FOR VARIOUS BOOM LENGTHS

ITEM NO.		90 & 94	95	96	89	92	87	9 & 86
BOOM LENGTH FEET	METERS	10 FT-1.0 3.07 M PENDANT SEE 38	20 FT-1.5 6.13 M PENDANT SEE 38	40 FT-3.0 12.27 M PENDANT SEE 38	PENDANT LINK 39.00 (991mm)	PENDANT LINK 11.00 (279mm)	PENDANT LINK 24.00 (610mm)	PIN
70	21.3	2	0	0	2	0	0	2
80	24.4	4	0	0	2	0	0	2
		OR 0	2	0	2	0	0	2
90	27.4	6	0	0	2	0	0	2
		OR 2	2	0	2	0	0	2
100	30.5	2	2	0	0	2	2	4
110	33.5	4	2	0	0	2	2	4
		OR 0	4	0	0	2	2	4
		OR 0	0	2	0	2	2	4
120	36.6	2	4	0	0	2	2	4
		OR 2	0	2	0	2	2	4
130	39.6	4	0	2	0	2	2	4
		OR 0	2	2	0	2	2	4
		OR 0	6	0	0	2	2	4
140	42.7	2	2	2	0	2	0	2
150	45.7	0	0	4	0	2	0	2
		OR 0	4	2	0	2	0	2
		OR 4	2	2	0	2	0	2
160	48.8	2	4	2	0	2	0	2
		OR 2	0	4	0	2	0	2
170	51.8	4	0	4	0	2	0	2
		OR 0	2	4	0	2	0	2
180	54.9	2	2	4	0	2	0	2
190	57.9	4	2	4	0	2	0	2
		OR 0	0	6	0	2	0	2
		OR 0	4	4	0	2	0	2
200	61.0	2	4	4	0	2	0	2
		OR 2	0	6	0	2	0	2

REFERENCE ONLY!

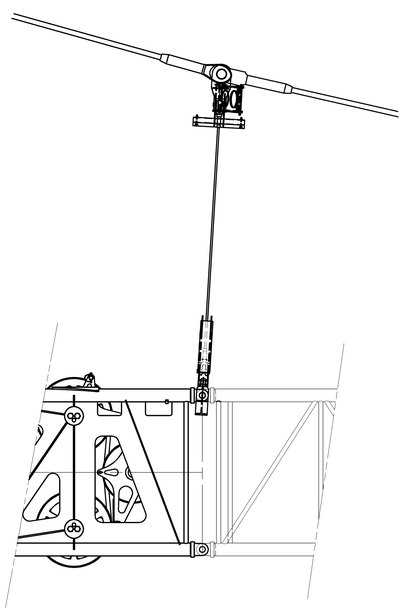

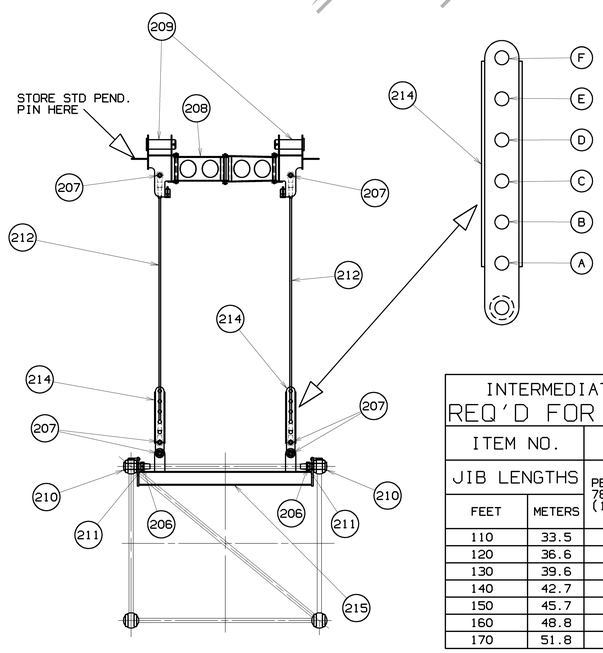

VIEW "V"-"V"

INTERMEDIATE SUSPENSION REQ'D FOR JIB LENGTHS

ITEM NO.		212	213	214
JIB LENGTHS FEET	METERS	PENDANT 78.0 IN (1.98M)	PENDANT 21.0 IN (.53M)	LINK HOLE POSITION SEE ABOVE
110	33.5	2	0	A
120	36.6	2	0	E
130	39.6	2	2	A
140	42.7	2	2	E
150	45.7	2	4	A
160	48.8	2	4	C
170	51.8	2	4	E

DWG. NO. A09286
SHT 2 OF 9

PRIVATE LABELING REQUIREMENT TO CONFORM TO ENGINEERING SPECIFICATION 6829103794 FOR COMPONENTS LISTED IN GDS500-05-035

DATE 11-13-03

PATTERN NO.

SCALE	Manitowoc Cranes, Inc. Manitowoc, Wisconsin	JIB LUFFING ASSEMBLY
DR. RH		#22EL BOOM/#135 JIB
CK. RH	MODEL 999	WITH STOWABLE PENDANTS
APP TSC		WITH INTERMEDIATE FALL

DWG. NO. A09286

DO NOT SCALE THIS DRAWING

A SHT. 2 OF 9

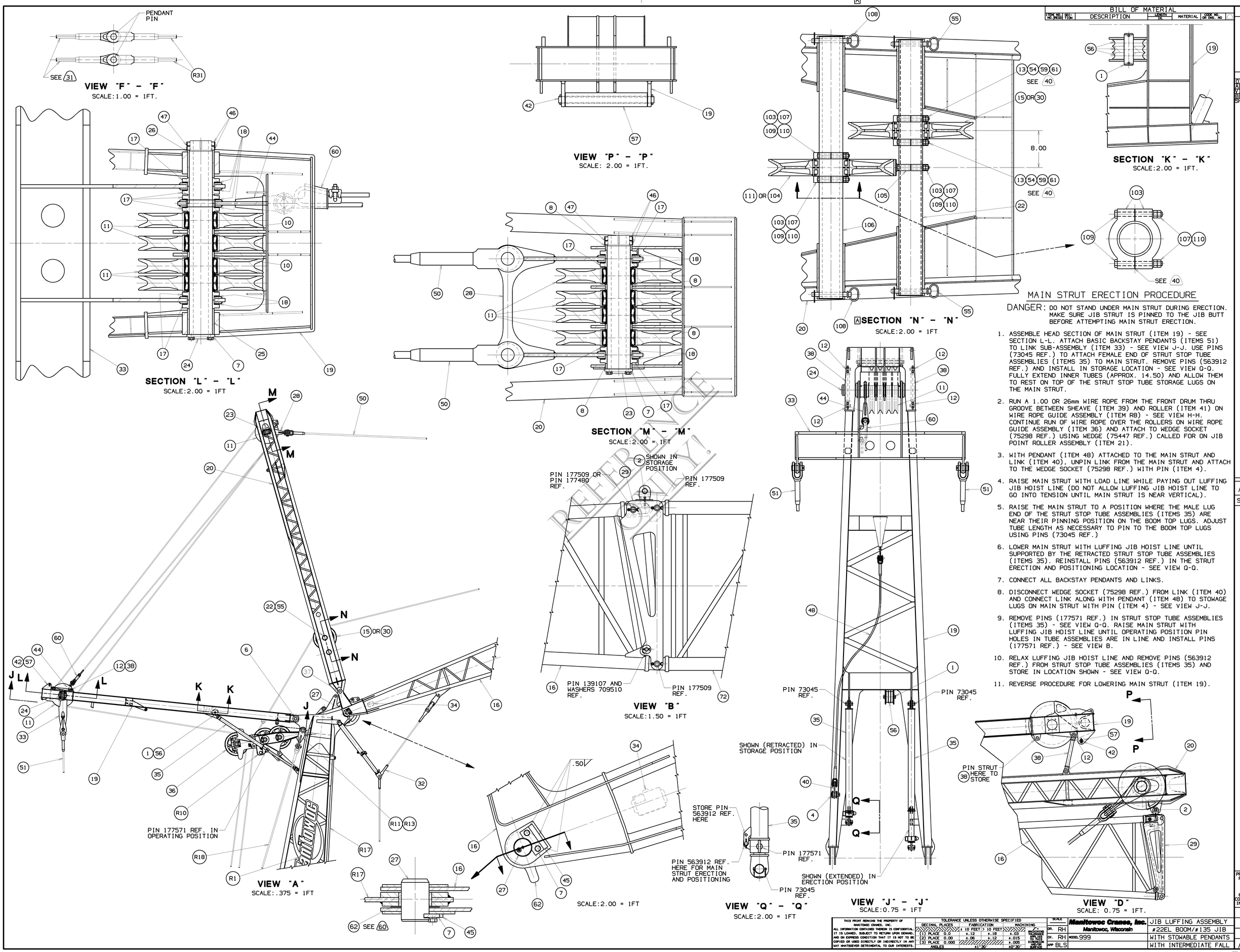

BILL OF MATERIAL

ITEM NO.	SECTION NO.	DESCRIPTION	LENGTH IN.	MATERIAL	CODE NO. OR DWG. NO.

ASSEMBLIES USED ON

REVISIONS
A 03-16-09 MER UPDATED VIEW
B WAS SHT 3 OF 8

MAIN STRUT ERECTION PROCEDURE

DANGER: DO NOT STAND UNDER MAIN STRUT DURING ERECTION. MAKE SURE JIB STRUT IS PINNED TO THE JIB BUTT BEFORE ATTEMPTING MAIN STRUT ERECTION.

1. ASSEMBLE HEAD SECTION OF MAIN STRUT (ITEM 19) - SEE SECTION L-L. ATTACH BASIC BACKSTAY PENDANTS (ITEMS 51) TO LINK SUB-ASSEMBLY (ITEM 33) - SEE VIEW J-J. USE PINS (73045 REF.) TO ATTACH FEMALE END OF STRUT STOP TUBE ASSEMBLIES (ITEMS 35) TO MAIN STRUT. REMOVE PINS (563912 REF.) AND INSTALL IN STORAGE LOCATION - SEE VIEW Q-Q. FULLY EXTEND INNER TUBES (APPROX. 14.50) AND ALLOW THEM TO REST ON TOP OF THE STRUT STOP TUBE STORAGE LUGS ON THE MAIN STRUT.
2. RUN A 1.00 OR 26mm WIRE ROPE FROM THE FRONT DRUM THRU GROOVE BETWEEN SHEAVE (ITEM 39) AND ROLLER (ITEM 41) ON WIRE ROPE GUIDE ASSEMBLY (ITEM R8) - SEE VIEW H-H. CONTINUE RUN OF WIRE ROPE OVER THE ROLLERS ON WIRE ROPE GUIDE ASSEMBLY (ITEM 36) AND ATTACH TO WEDGE SOCKET (75298 REF.) USING WEDGE (75447 REF.) CALLED FOR ON JIB POINT ROLLER ASSEMBLY (ITEM 21).
3. WITH PENDANT (ITEM 48) ATTACHED TO THE MAIN STRUT AND LINK (ITEM 40), UNPIN LINK FROM THE MAIN STRUT AND ATTACH TO THE WEDGE SOCKET (75298 REF.) WITH PIN (ITEM 4).
4. RAISE MAIN STRUT WITH LOAD LINE WHILE PAYING OUT LUFFING JIB HOIST LINE (DO NOT ALLOW LUFFING JIB HOIST LINE TO GO INTO TENSION UNTIL MAIN STRUT IS NEAR VERTICAL).
5. RAISE THE MAIN STRUT TO A POSITION WHERE THE MALE LUG END OF THE STRUT STOP TUBE ASSEMBLIES (ITEMS 35) ARE NEAR THEIR PINNING POSITION ON THE BOOM TOP LUGS. ADJUST TUBE LENGTH AS NECESSARY TO PIN TO THE BOOM TOP LUGS USING PINS (73045 REF.)
6. LOWER MAIN STRUT WITH LUFFING JIB HOIST LINE UNTIL SUPPORTED BY THE RETRACTED STRUT STOP TUBE ASSEMBLIES (ITEMS 35). REINSTALL PINS (563912 REF.) IN THE STRUT ERECTION AND POSITIONING LOCATION - SEE VIEW Q-Q.
7. CONNECT ALL BACKSTAY PENDANTS AND LINKS.
8. DISCONNECT WEDGE SOCKET (75298 REF.) FROM LINK (ITEM 40) AND CONNECT LINK ALONG WITH PENDANT (ITEM 48) TO STOWAGE LUGS ON MAIN STRUT WITH PIN (ITEM 4) - SEE VIEW J-J.
9. REMOVE PINS (177571 REF.) IN STRUT STOP TUBE ASSEMBLIES (ITEMS 35) - SEE VIEW Q-Q. RAISE MAIN STRUT WITH LUFFING JIB HOIST LINE UNTIL OPERATING POSITION PIN HOLES IN TUBE ASSEMBLIES ARE IN LINE AND INSTALL PINS (177571 REF.) - SEE VIEW B.
10. RELAX LUFFING JIB HOIST LINE AND REMOVE PINS (563912 REF.) FROM STRUT STOP TUBE ASSEMBLIES (ITEMS 35) AND STORE IN LOCATION SHOWN - SEE VIEW Q-Q.
11. REVERSE PROCEDURE FOR LOWERING MAIN STRUT (ITEM 19).

DWG. NO. A09286
SHT 3 OF 9

PRIVATE LABELING REQUIREMENT TO CONFORM TO ENGINEERING SPECIFICATION 6829103794 FOR COMPONENTS LISTED IN 6055001-05-035

DATE 11-13-03
PATTERN NO.

THIS PRINT REMAINS THE PROPERTY OF MANITOWOC CRANES, INC. ALL INFORMATION CONTAINED THEREON IS CONFIDENTIAL. IT IS LOANED, SUBJECT TO RETURN UPON DEMAND, AND ON EXPRESS CONDITION THAT IT IS NOT TO BE COPIED OR USED DIRECTLY OR INDIRECTLY IN ANY WAY WHATSOEVER DETRIMENTAL TO OUR INTERESTS.

TOLERANCE UNLESS OTHERWISE SPECIFIED				
DECIMAL PLACES	FABRICATION ≤ 10 FEET	FABRICATION > 10 FEET	MACHINING	FINISH MACHINING TOLERANCE ±.005 IN NOTE DIMENSION ON FINISH SURFACE
(1) PLACE 0.0	±.12	±.18	±.03	
(2) PLACE 0.00	±.06	±.12	±.015	
(3) PLACE 0.000			±.005	
ANGLES	±1°30'		±0°30'	

SCALE

DR.	RH
CK.	RH
APP	BLS

Manitowoc Cranes, Inc.
Manitowoc, Wisconsin
MODEL 999

JIB LUFFING ASSEMBLY
#22EL BOOM/#135 JIB
WITH STOWABLE PENDANTS
WITH INTERMEDIATE FALL

DWG. NO. A09286

DO NOT SCALE THIS DRAWING

SHT 3 OF 9

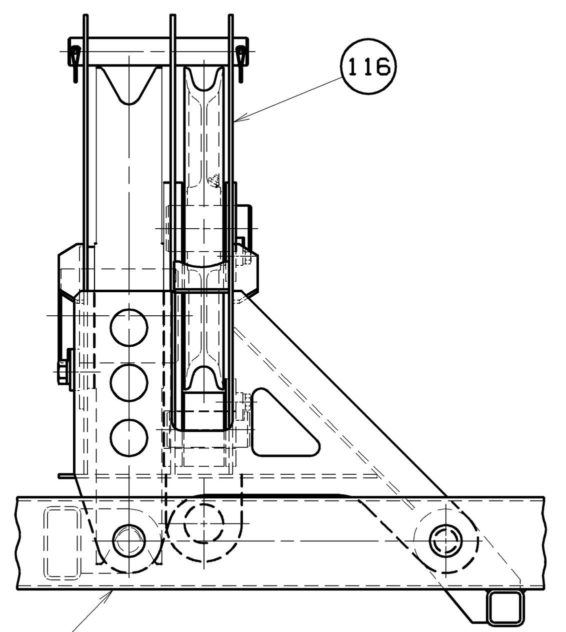

VIEW "H" - "H"
SCALE: 2.00 = 1FT

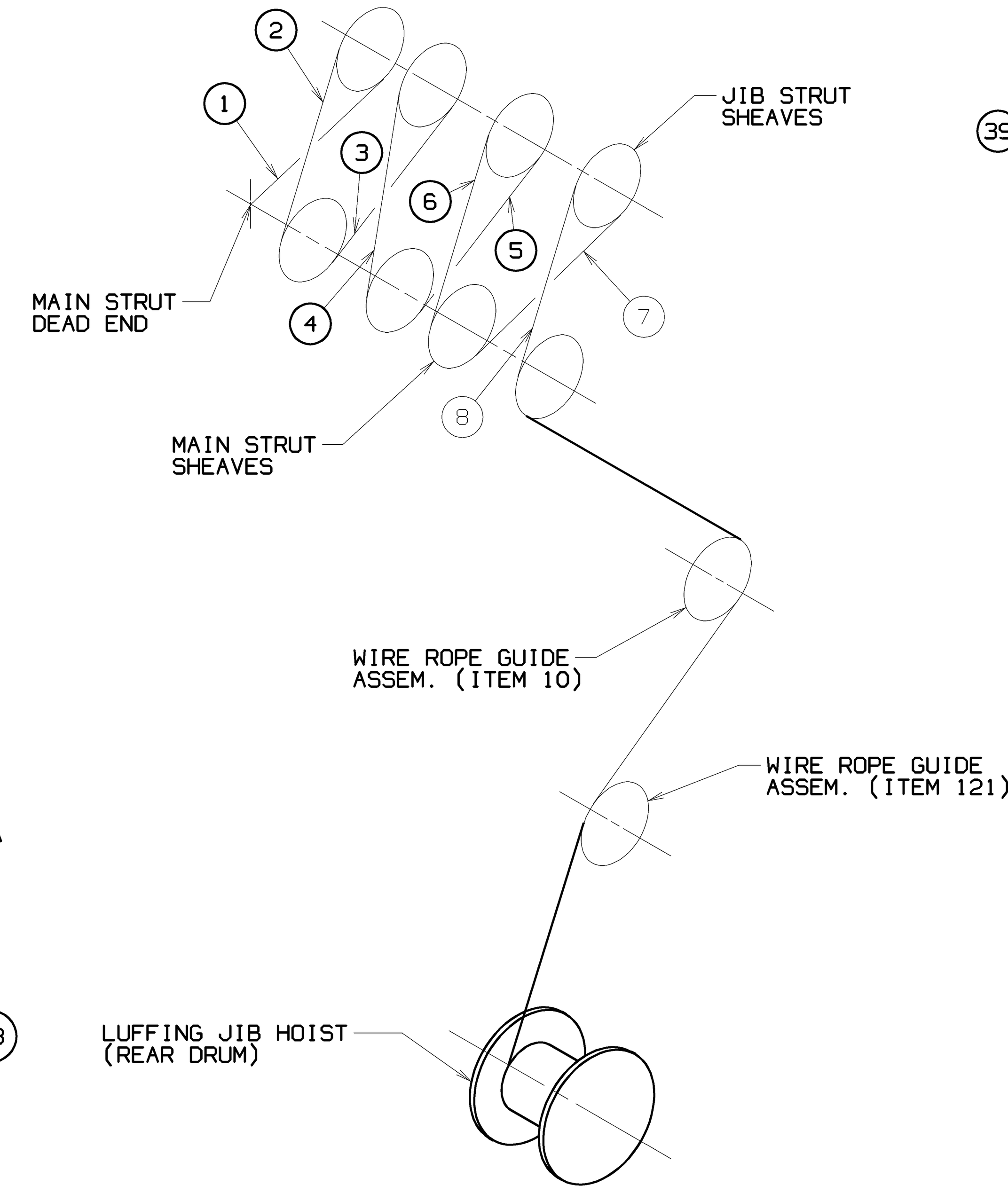

LUFFING JIB HOIST REEVING DIAGRAM FOR 8 PART LINE - SEE 34 35 AND 36

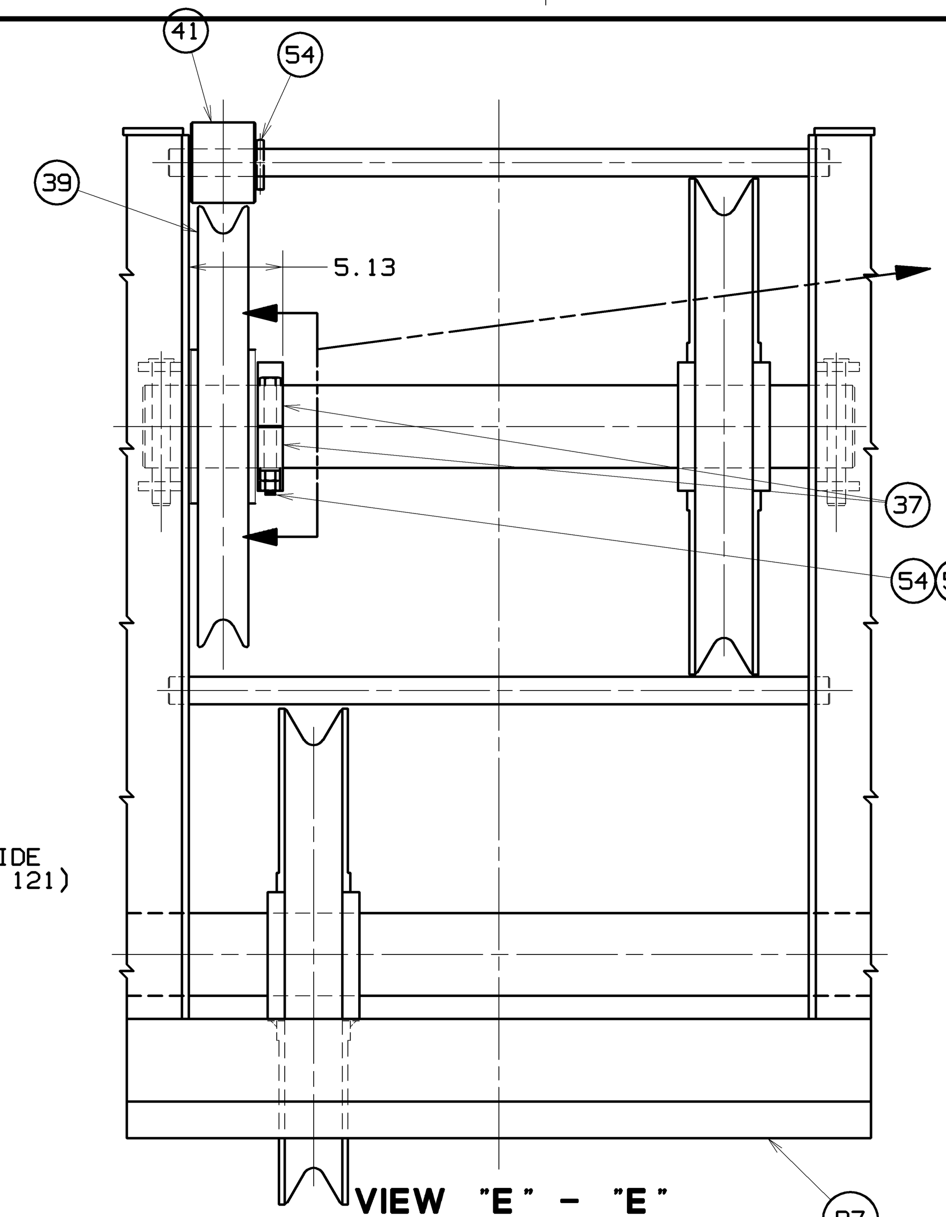

VIEW "E" - "E"
SCALE:2.00 = 1FT

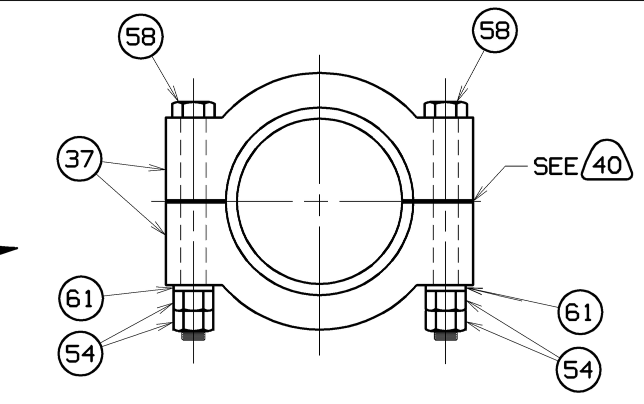

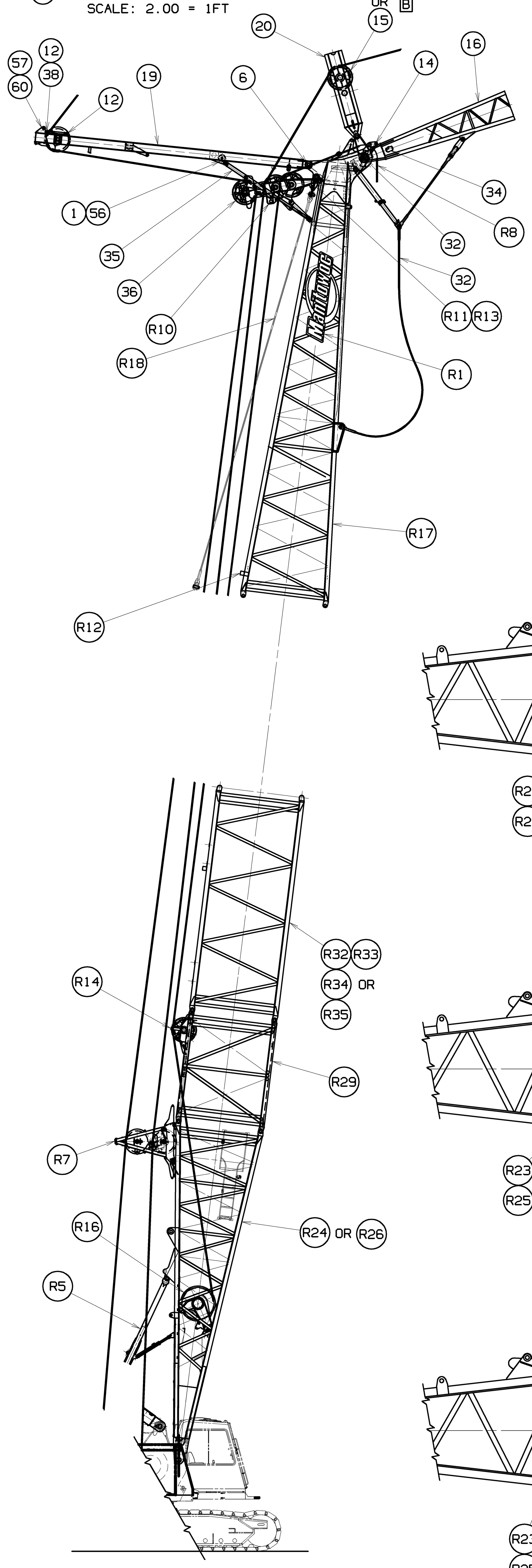

#22EL BOOM/#135 JIB ASSEMBLY
WITH AUX. DRUM SHAFT ASSEMBLY

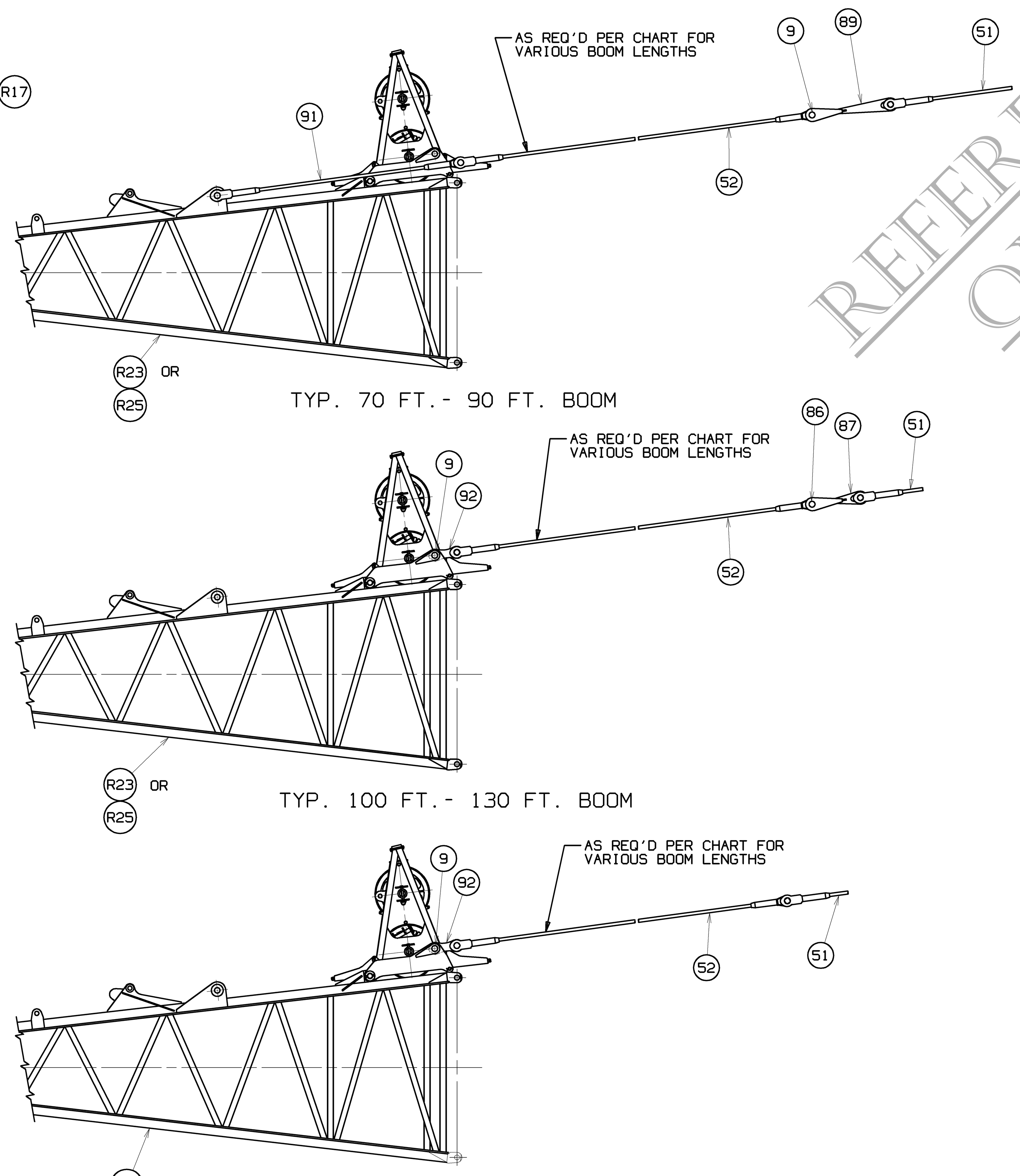

VIEW "C"
BASIC JIB BACKSTAY PENDANT ARRANGEMENTS
SCALE: .375 = 1FT

REFERENCE ONLY!

BILL OF MATERIAL

ITEM NO.	NO. REQD	SECTION	DESCRIPTION	LENGTH IN.	MATERIAL	CODE NO. OR DWG. NO

1. EXISTING 10 FT. (3.05M) BOOM INSERT (33407-2) CAN ALSO BE USED.
2. (33426-3) IS WITHOUT JIB BACKSTAY LUGS.
   (623580) IS WITH JIB BACKSTAY LUGS.
   EXISTING 20 FT. (6.10M) BOOM INSERT (623564) WITHOUT JIB BACKSTAY LUGS CAN ALSO BE USED.
3. (50609-2) IS WITHOUT JIB BACKSTAY LUGS.
   (623526) IS WITH JIB BACKSTAY LUGS.
   THE FOLLOWING EXISTING 40 FT. (12.19M) BOOM INSERTS CAN ALSO BE USED: (623532), (623533), (623534), (623535), (623536) AND (623537) ARE WITHOUT BACKSTAY LUGS.
   (623527), (623530) AND (623579) ARE WITH BACKSTAY LUGS.
4. IF #23 BOOM TOP (191029) IS TO BE USED AS THE #135 LUFFING JIB TOP, MODIFY PER (421224).
5. IF #22E BOOM BUTT (ITEM R23) IS NOT EQUIPPED WITH JIB BACKSTAY LUGS, MODIFY PER (421226).
6. IF #22L BOOM TOP (ITEM R17) IS NOT EQUIPPED WITH JIB STOP LUGS, MODIFY PER (421225).
7. (7) - 30.00 DIA. SHEAVES
8. ON DRAWING (78145).
9. ON DRAWING (147109).
10. ON DRAWING (79335).
11. ON DRAWING (76280).
12. ON DRAWING (140773).
13. TIGHTEN BEARING LOCKNUT (ITEM 46) SUFFICIENTLY TO CLAMP BEARING INNER RACE.
14. MAXIMUM NO. OF 10 FT. (3.05M) BOOM INSERTS = (2)
15. MAXIMUM NO. OF 20 FT. (6.10M) BOOM INSERTS = (2)
16. COMBINATIONS OF 10 FT. (3.05M) AND 20 FT. (6.10M) BOOM INSERTS CANNOT EXCEED (2) - 10 FT. (3.05M) PLUS (1) - 20 FT. (6.10M) OR (1) - 10 FT. (3.05M) PLUS (2) - 20 FT. (6.10M).
17. SEE 1 14 16 AND 48
18. SEE 2 15 16 AND 49
19. STARTING WITH THE BOOM OR JIB BUTT, INSERTS AND PENDANTS MUST BE ASSEMBLED IN ORDER OF ASCENDING LENGTH. THE SHORTER INSERTS AND PENDANTS MUST BE CLOSEST TO THE BOOM OR JIB BUTT. SEE 27
20. REQUIRED FOR BASIC BACKSTAY PENDANT. ATTACHES TO LINK SUB-ASSEMBLY (ITEM 33).
21. REQUIRED FOR BASIC JIB PENDANT. ATTACHES TO THE JIB TOP (ITEM 31) LINK.
22. (ITEMS 66, 71, 77, 82, 121, 126, 132 & 137) ARE THE SAME PART NO. (70366).
    (ITEMS 68, 73, 78, 83, 123, 128, 133 & 138) ARE THE SAME PART NO. (192022).
    (ITEMS 69, 90 & 94) ARE THE SAME PART NO. (277382).
    (ITEMS 49, 74 & 95) ARE THE SAME PART NO. (277383).
    (ITEMS 79, 84, 96 & 201) ARE THE SAME PART NO. (277384).
    (ITEMS 124, 141 & 144) ARE THE SAME PART NO. (276823).
    (ITEMS 129, & 145) ARE THE SAME PART NO. (276825).
    (ITEMS 134, & 146) ARE THE SAME PART NO. (276892).
23. SEE 8 21 AND 22
24. SEE 8 19 AND 22
25. WHEN AUXILIARY DRUM SHAFT ASSEMBLY (ITEM R16) IS USED, #22E BOOM BUTT (ITEM R24 OR R26), WIRE ROPE GUIDE ASSEMBLY (ITEM R14) AND 10 FT. (3.05M) #22E INSERT (ITEM R29) ARE REQUIRED. THE 10 FT. INSERT MUST BE ADJACENT TO THE BOOM BUTT AT ALL TIMES. MINIMUM BOOM LENGTH USING THESE COMPONENTS IS 80 FT. (24.38M).
26. IF BOOM BUTT (ITEM R23) IS TO BE USED WITH AUXILIARY DRUM SHAFT ASSEMBLY (ITEM R16), MODIFY PER (421218).
27. INSERT 40 FT ASSY (ITEM 200) MUST BE ATTACHED TO JIB BUTT. STARTING WITH ITEM 200, INSERTS AND PENDANTS MUST BE ASSEMBLED IN ORDER OF ASENDING LENGTH. THE SHORTER INSERTS AND PENDANTS MUST BE CLOSEST TO ITEM 200.
28. ATTACHES TO JIB STRUT LINK SUB-ASSEMBLY (ITEM 28).
29. INSTALL WITH HEAD OF PENDANT PIN (ITEM 5) TO THE INSIDE.
30. SEE VIEW "C" FOR VARIOUS JIB BACKSTAY PENDANT (ITEM 52) AND PENDANT LINK (ITEMS 87, 89 AND 92) ARRANGEMENTS.
31. PENDANTS SHOWN - SEE VIEW F-F ARE CALLED FOR ON MAST ASSEMBLY (ITEM R4).
32. REFER TO SPECIFIC CAPACITY CHART FOR APPROPRIATE BOOM AND JIB COMBINATIONS.
33. REFER TO LUFFING JIB RAISING PROCEDURE (8248A) FOR RAISING AND LOWERING BOOM AND JIB.
34. WIRE ROPE - 1.00 INCH X 850 FT. CONSTRUCTEX. BREAKING STRENGTH OF 125,000 LBS. FOR USE ON REAR HOIST DRUM.
35. WIRE ROPE - 1.00 INCH X 850 FT. PYTHON 8F7KV RIGHT HAND REGULAR LAY. BREAKING STRENGTH OF 120,600 LBS. FOR USE ON REAR HOIST DRUM.
36. WIRE ROPE - 26MM X 850 FT. PYTHON 8F7KV RIGHT HAND REGULAR LAY. BREAKING STRENGTH OF 126,400 LBS. FOR USE WITH ON REAR HOIST DRUM.
37. USE (4) PINS (70366) FROM INSERT ADJACENT TO ADAPTER ASSEMBLY (ITEM 29) FOR JIB TOP CONNECTION.
38. 10 FT. (3.05M) PENDANT (276823), 20FT. (6.10M) PENDANT (276825) AND 40 FT. (12.19M) PENDANT (276892) MAY BE USED IN PLACE OF 10 FT.-1.00 (3.07M) PENDANT (277382), 20 FT.-1.50 (6.13M) PENDANT (277383) AND 40 FT.-3.00 (12.27M) PENDANT (277384) FOR JIB/JIB BACKSTAY.
    DO NOT MIX PENDANTS OF DIFFERENT LENGTHS.
    PENDANTS MUST BE INSTALLED IN MATCHED SETS (PENDANTS ON ONE SIDE OF BOOM MUST MATCH LENGTH OF PENDANTS ON OTHER SIDE OF BOOM). FAILING TO OBSERVE THIS PRECAUTION WILL CAUSE MAST TO TWIST EXCESSIVELY WHEN BOOM IS RAISED. STRUCTURAL DAMAGE TO MAST OR BOOM WILL OCCUR.
39. REQUIRED FOR FOLD UNDER LUFFING JIB - MUST BE REMOVED FOR RAISING MAXIMUM BOOM/JIB COMBINATIONS. REFER TO LUFFING JIB RAISING PROCEDURE (8248A).
40. TIGHTEN EACH SIDE EQUALLY TO PROVIDE AN EQUAL GAP. TORQUE (ITEMS 59, 58, AND 109) TO 120 FT. LBS. AND ADD SECOND (ITEM 54 OR 107) AS A LOCKNUT. SEE VIEW E-E AND SECTION N-N.
41. ATTACHES TO BACKSTAY LUG ON BOOM BUTT.
42. MATERIAL- A-514
43. WHEN (ITEM R30) INSERT 10 FT. (3.05M) #22E IS USED, (2) TIMBERS (ITEM R45) ARE REQUIRED FOR STOWAGE DURING SHIPPING BUT MUST BE REMOVED FOR CRANE OPERATION.
44. WHEN (ITEM R33 OR R35) INSERT 20 FT. (6.10M) #22E IS USED, (2) TIMBERS (ITEM R45) ARE REQUIRED FOR STOWAGE DURING SHIPPING BUT MUST BE REMOVED FOR CRANE OPERATION. REINSTALL (1) TIMBER ON TOP OF INSERT CHORDS FOR CRANE OPERATION.
45. WHEN (ITEM R39 OR R41) INSERT 40 FT. (12.19M) #22E IS USED, (3) TIMBERS (ITEM R45) ARE REQUIRED FOR STOWAGE DURING SHIPPING BUT MUST BE REMOVED FOR CRANE OPERATION. REINSTALL (2) TIMBERS ON TOP OF INSERT CHORDS FOR CRANE OPERATION.
46. SEE 43 44 OR 45
47. EQUIPPED WITH REMOVALABLE DIAGONAL LACINGS.
48. INSERT (33407) 10 FT. (3.05M) CAN BE EQUIPPED WITH REMOVABLE DIAGONAL LACINGS PER MODIFICATION (421257).
49. INSERT (33426) 20 FT. (6.10M) CAN BE EQUIPPED WITH REMOVABLE DIAGONAL LACINGS PER MODIFICATION (421258).
50. INSERT (50609) 40 FT. (12.19M) CAN BE EQUIPPED WITH REMOVABLE DIAGONAL LACINGS PER MODIFICATION (421259).
51. FOR USE WITH FOLD UNDER LUFFING JIB WHEN BLOCK IS ATTACHED TO LOWER BOOM POINT (ITEM R8).
52. (421256) AND (421262) ARE #22E BOOM BUTT MODIFICATIONS FOR USE AS #22EL JIB BUTTS.
53. SEE 3 19 OR 50
54. BOLT TORQUE: (WITH LOCTITE #271)
    APPLY LOCTITE #271 (MCC CODE NO. 622292) TO THREADS OF CAPSCREWS WITH (ITEM 43) - SEE VIEWS "T" & "V" AND TORQUE TO 180 FT. LBS.
55. WIRE ROPE WINCH ASSEMBLY (ITEM 117) IS REQUIRED FOR FOLD-UNDER LUFFING JIB AND CAN ONLY BE USED WITH WIRE ROPE GUIDE SINGLE SHEAVE BRACKET ASSEMBLY (ITEM 115).
56. WIRE ROPE GUIDE SINGLE SHEAVE BRACKET ASSEMBLY (ITEM 115) IS OPTIONAL FOR LAYOUT OR FOLD-UNDER LUFFING JIB.
57. WIRE ROPE GUIDE DOUBLE SHEAVE BRACKET ASSEMBLY (ITEM 116) IS OPTIONAL FOR LAYOUT LUFFING JIB BUT IS REQUIRED FOR USE WITH THE #138 JIB.
58. 10 FT. (3.05M) PENDANT (277382), 20FT. (6.10M) PENDANT (277383) AND 40 FT. (12.19M) PENDANT (277384) MAY BE USED IN PLACE OF 10 FT.-1.00 (3.07M) PENDANT (276823), 20 FT.-1.50 (6.13M) PENDANT (276825) AND 40 FT.-3.00 (12.27M) PENDANT (276892) FOR JIB/JIB BACKSTAY.
    DO NOT MIX PENDANTS OF DIFFERENT LENGTHS.
    PENDANTS MUST BE INSTALLED IN MATCHED SETS (PENDANTS ON ONE SIDE OF BOOM MUST MATCH LENGTH OF PENDANTS ON OTHER SIDE OF BOOM). FAILING TO OBSERVE THIS PRECAUTION WILL CAUSE MAST TO TWIST EXCESSIVELY WHEN BOOM IS RAISED. STRUCTURAL DAMAGE TO MAST OR BOOM WILL OCCUR.
59. LINKS (ITEM 136) AND PINS (ITEM 137) ARE REQUIRED FOR BOOM LENGTHS OF 190 FT. (57.91M) AND LONGER - SEE SHEET 6.
60. ADD SHIMS (ITEM 62) AS REQUIRED (IN AREA SHOWN) TO LIMIT LATERAL MOVEMENT OF JIB BUTT. USE AN EQUAL AMOUNT OF SHIMS ON BOTH SIDES TO CENTER JIB BUTT WITH BOOM TOP.
61. USE COTTER PIN 562172.
62. REPLACES BOOM JOINT PIN 70366 WHEN INTERMEDIATE SUSPENSION IS USED.
63. ON DRAWING (A06395).
64. ON DRAWING (A02427).

ASSEMBLIES USED ON

REVISIONS
03-16-09 MER
A WAS SHT 4 OF 8
B UPDATED VIEW

DWG. NO. A09286
SHT 4 OF 9

PRIVATE LABELING REQUIREMENT TO CONFORM TO ENGINEERING SPECIFICATION 6829103794 FOR COMPONENTS LISTED IN GDS500-05-035

DATE 11-13-03
PATTERN NO.

THIS PRINT REMAINS THE PROPERTY OF MANITOWOC CRANES, INC. ALL INFORMATION CONTAINED THEREON IS CONFIDENTIAL. IT IS LOANED, SUBJECT TO RETURN UPON DEMAND, AND ON EXPRESS CONDITION THAT IT IS NOT TO BE COPIED OR USED DIRECTLY OR INDIRECTLY IN ANY WAY WHATSOEVER DETRIMENTAL TO OUR INTERESTS.

TOLERANCE UNLESS OTHERWISE SPECIFIED

DECIMAL PLACES	FABRICATION ≤ 10 FEET	FABRICATION > 10 FEET	MACHINING
(1) PLACE 0.0	±.12	±.18	±.03
(2) PLACE 0.00	±.06	±.12	±.015
(3) PLACE 0.000			±.005
ANGLES	±1°30'		±0°30'

MACHINING TOLERANCE APPLIES TO THIS DIMENSION AND/OR SURFACE

SCALE		
DR. RH	Manitowoc Cranes, Inc. Manitowoc, Wisconsin	JIB LUFFING ASSEMBLY
CK. RH	MODEL 999	#22EL BOOM/#135 JIB
APP BLS		WITH STOWABLE PENDANTS WITH INTERMEDIATE FALL

DWG. NO. A09286

DO NOT SCALE THIS DRAWING

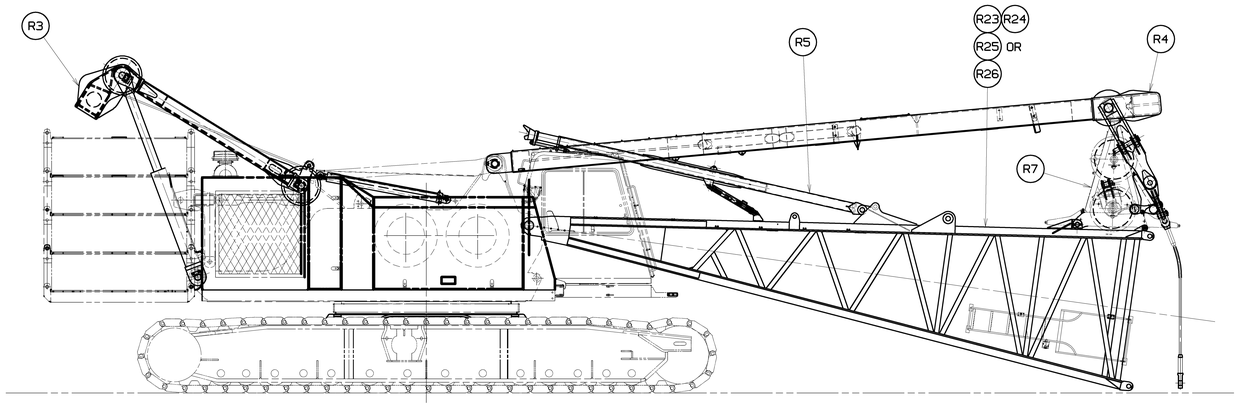

MAST RESTING ON BOOM BUTT WIRE ROPE GUIDE

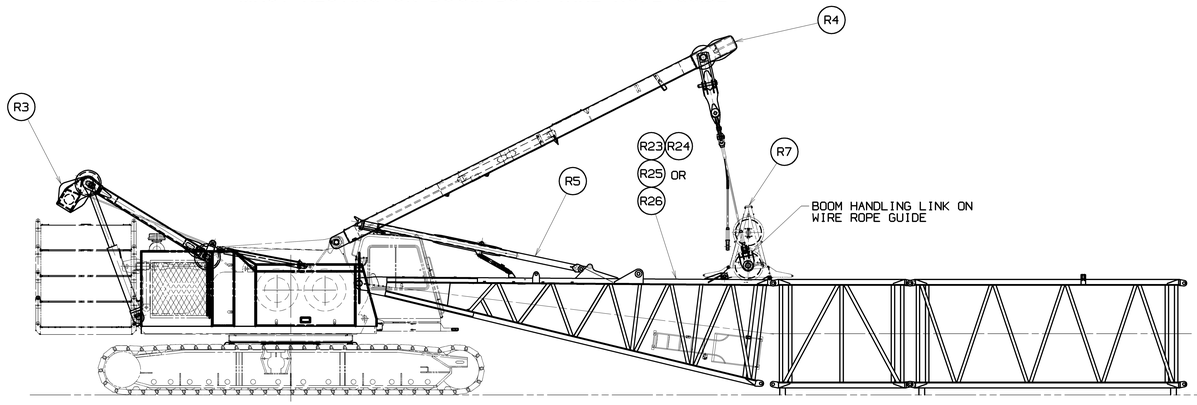

BOOM ASSEMBLY WITH MAST

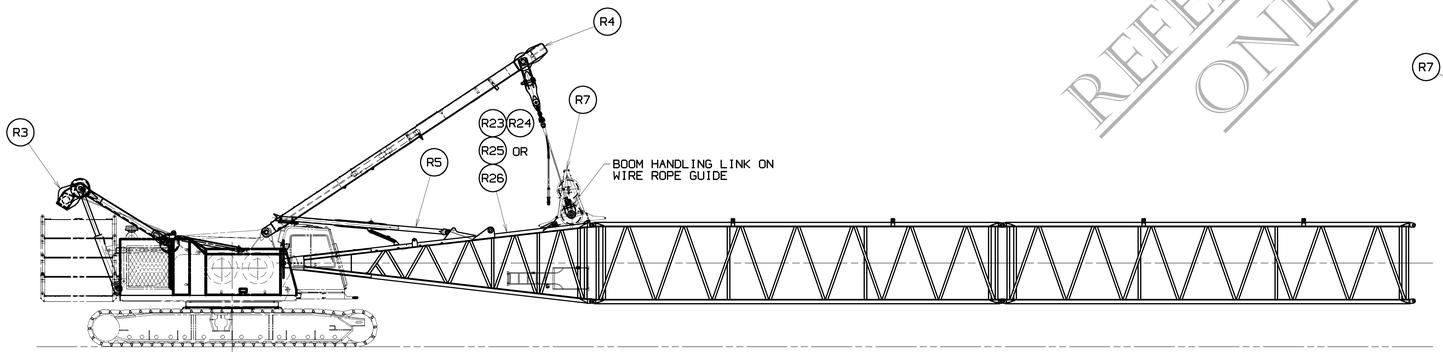

BOOM ASSEMBLY WITH MAST

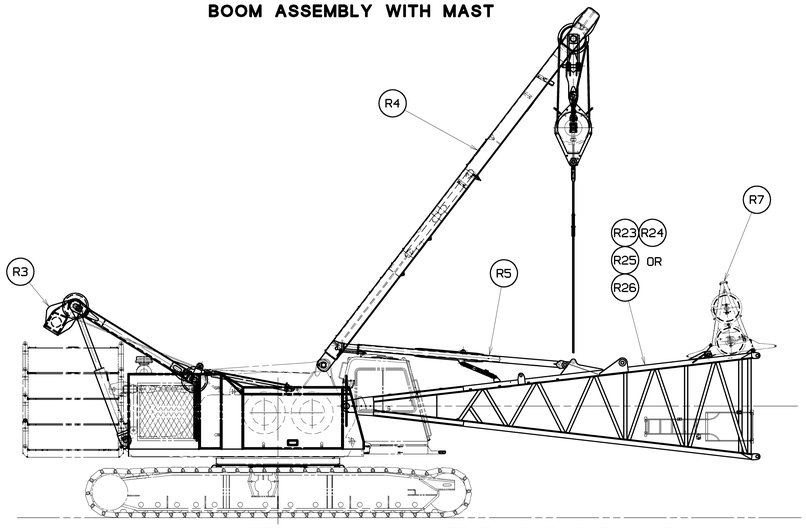

ATTACHING BOOM BUTT TO ROTOTATING BED USING AUXILIARY BLOCK IN MAST

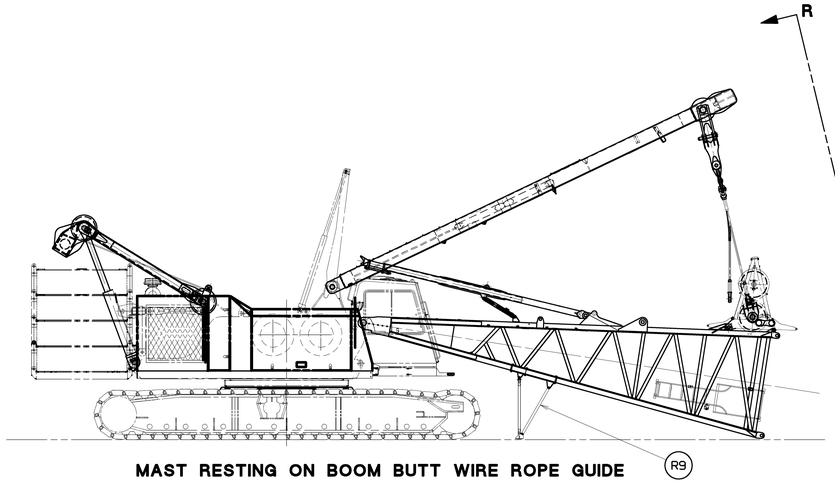

MAST RESTING ON BOOM BUTT WIRE ROPE GUIDE

REFERENCE ONLY!

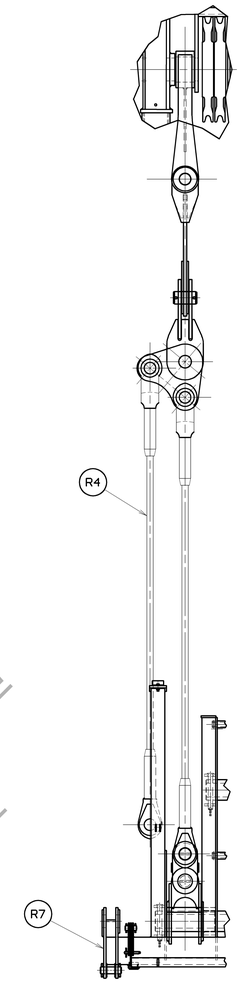

VIEW "R" - "R"
SCALE: 1.00 = 1FT

BILL OF MATERIAL						
ITEM NO. / NO. REQD.	SEC-TION	DESCRIPTION	LENGTH IN	MATERIAL	CODE NO. OR DWG. NO.	

ASSEMBLIES USED ON

BOOM ASSEMBLY PROCEDURE

(MAST CAN BE USED TO ASSEMBLE ALL RIGGING COMPONENTS.)

1. ASSEMBLE BOOM COMPLETE, WITHOUT BUTT.
2. ATTACH ROPE GUIDES, PENDANTS, LINKS AND PINS AS REQ'D.
3. USING THE MAST WITH AUXILIARY BLOCK OR THE OPTIONAL BOOM BUTT SUPPORT, INSTALL THE BOOM BUTT WITH ROPE GUIDE AND BOOM STOPS TO ROTATING BED. (BOOM STOPS MUST BE IN SHIPPING (LOWER) POSITION.)
4. BOOM DOWN AND ATTACH INSIDE MAST PENDANT TO BOOM HANDLING LINK ON ROPE GUIDE (ITEM R7) - SEE VIEW "R"-"R"
5. BOOM UP TO CLEAR GROUND WITH BUTT.
6. POSITION MACHINE TO ALIGN UPPER PIN CONNECTOR HOLES ON BOOM BUTT WITH UPPER PIN CONNECTOR HOLES ON FIRST BOOM INSERT AND INSERT PINS.
7. SLOWLY BOOM UP TO ALIGN LOWER PIN CONNECTOR HOLES ON BOOM BUTT WITH LOWER PIN CONNECTOR HOLES IN FIRST BOOM INSERT AND INSERT PINS.

WARNING:

DO NOT BOOM UP PAST LOWER CONNECTOR HOLES. IF BOOMING UP CONTINUES AFTER CONNECTORS BOTTOM OUT OR AFTER PINS ARE INSERTED, DAMAGE TO ROPE GUIDE AND BOOM BUTT WILL OCCUR.

8. BOOM DOWN TO DISCONNECT MAST PENDANT FROM ROPE GUIDE LINKS.
9. ATTACH MAST PENDANT TO BOOM PENDANTS.
10. BOOM UP TO REMOVE SOME SLACK FROM PENDANTS.
11. CONNECT HANDLING PENDANTS TO BOOM STOPS AND RAISE BOOM STOPS INTO POSITION. PIN STRUTS IN EXTENDED POSITION. STOW HANDLING PENDANTS.
12. BOOM UP TO DESIRED BOOM ANGLE.

TO DISASSEMBLE BOOM

1. BOOM DOWN AND SUPPORT BOOM ON BLOCKING.
2. LOWER BOOM STOPS.
3. DISCONNECT MAST PENDANT FROM BOOM PENDANTS
4. CONNECT INSIDE MAST PENDANTS TO HANDLING LINK ON ROPE GUIDE (ITEM R7) - SEE VIEW "R"-"R"
5. BOOM UP TO REMOVE SLACK FROM MAST PENDANT.

WARNING:

DO NOT BOOM UP TO PUT TENSION INTO MAST PENDANT. (REMOVE SLACK ONLY) TENSION IN MAST PENDANT WILL DAMAGE ROPE GUIDE AND BOOM BUTT.

6. REMOVE LOWER AND THEN UPPER BOOM BUTT CONNECTOR TO BOOM INSERT CONNECTOR PINS.

WARNING:

BOOM MUST BE PROPERLY BLOCKED TO PREVENT SHIFTING DURING PIN REMOVAL.

7. SLOWLY BOOM UP TO SUPPORT BOOM BUTT WITH MAST PENDANT AND BACK AWAY FROM BOOM.
8. REMOVE BOOM BUTT FROM ROTATING BED WITH MAST.
9. DISASSEMBLE BOOM WITH MAST.

BOOM HANDLING WITH MAST
WITH MAST PENDANTS PINNED TO ROPE GUIDE LINKS; MAXIMUM BOOM THAT CAN BE CANTILEVERED IS AS FOLLOWS:

LENGTH	10 FT. (3.05 M) INSERT	20 FT. (6.10 M) INSERT	40 FT. (12.2 M) INSERT
40 FT. (12.2 M)	2	1	0
50 FT. (15.2 M)	1	2	0
60 FT. (18.3 M)	2	0	1
60 FT. (18.3 M)	0	1	1
80 FT. (24.4 M)	0	0	2

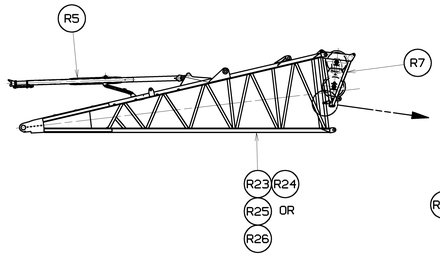

BOOM BUTT SHIPPING ARRANGEMENT

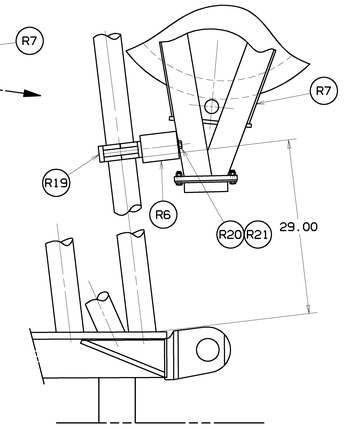

REVISIONS
03-16-09 MER A) WAS SHT 5 OF 8

DWG. NO. A09286
SHT 5 OF 9

PRIVATE LABELING REQUIREMENT TO CONFORM TO ENGINEERING SPECIFICATION 6829103794 FOR COMPONENTS LISTED IN 6055000-05-035

DATE 11-13-03
PATTERN NO.

THIS PRINT REMAINS THE PROPERTY OF MANITOWOC CRANES, INC. ALL INFORMATION CONTAINED THEREON IS CONFIDENTIAL. IT IS LOANED, SUBJECT TO RETURN UPON DEMAND, AND ON EXPRESS CONDITION THAT IT IS NOT TO BE COPIED OR USED DIRECTLY OR INDIRECTLY IN ANY WAY WHATSOEVER DETRIMENTAL TO OUR INTERESTS.

TOLERANCE UNLESS OTHERWISE SPECIFIED				
DECIMAL PLACES	FABRICATION ≤ 10 FEET	FABRICATION > 10 FEET	MACHINING	
(1) PLACE 0.0	±.12	±.18	±.03	±1° MACHINING TOLERANCE ON ANGLE ON NOTE DIMENSION AND/OR SURFACE
(2) PLACE 0.00	±.06	±.12	±.015	
(3) PLACE 0.000			±.005	
ANGLES	±1°30'		±0°30'	

SCALE
DR. RH
CK. RH
APP BLS

Manitowoc Cranes, Inc.
Manitowoc, Wisconsin
MODEL 999

JIB LUFFING ASSEMBLY
#22EL BOOM/#135 JIB
WITH STOWABLE PENDANTS
WITH INTERMEDIATE FALL

DWG. NO. A09286

DO NOT SCALE THIS DRAWING

A SHT 5 OF 9

BILL OF MATERIAL						
ITEM NO. / NO. REQD.	SEC-TION	DESCRIPTION	LENGTH IN	MATERIAL	CODE NO. OR DWG. NO.	

ASSEMBLIES USED ON

REVISIONS

03-16-09 MER
A) WAS SHT 6 OF 8
B) UPDATED VIEW

FOLD-UNDER LUFFING JIB RAISING CONDITIONS

(SEE LUFFING JIB RAISING PROCEDURE 8248A)

NOTE: THE FOLLOWING IS REQUIRED FOR FOLD-UNDER OPERATION.

A) WIRE ROPE GUIDE ASSEMBLY (ITEM 113) MUST BE INSTALLED.

B) ADAPTER ASSEMBLY (ITEM 29) MUST BE EQUIPPED WITH PIN PULLER COMPONENTS CALLED FOR ON (ITEM 29 REF.).

C) WIRE ROPE WINCH ASSEMBLY (ITEM 117) AND WIRE ROPE GUIDE SINGLE SHEAVE BRACKET ASSEMBLY (ITEM 115) MUST BE INSTALLED.

NOTE: WHEN JIB BUTT IS FOLDED UNDER BOOM TOP (JIB PENDANTS NOT ATTACHED) USE CAUTION DURING ASSEMBLY AND RAISING OR LOWERING OF JIB THAT JIB STRUT DOES NOT CRASH INTO WIRE ROPE GUIDE ON FRONT OF BOOM TOP OR DAMAGE WILL OCCUR (SEE VIEW "P").

BOOM UP UNTIL THERE IS ENOUGH CLEARANCE TO CONNECT INTERMEDIATE SUSPENSION PENDANTS AND LINK TO BEAM (ITEM 215). CONTINUE TO BOOM UP UNTIL THERE IS ENOUGH CLEARANCE FOR WIRE ROPE GUIDE MOUNTED TO THE JIB TOP TO BE LOWERED WITH THE POSITIONING WINCH AND PINNED IN ITS WORKING POSITION. CONTINUE TO BOOM UP UNTIL JIB STRUT CAN HANG APPROXIMATELY VERTICAL. CONNECT JIB PENDANTS AND LINKS TO JIB POINT AND JIB STRUT TOP (EXCESS PENDANT SLACK SHOULD BE AT THE JIB STRUT END). LUFF UP TO REMOVE EXCESS JIB PENDANT SLACK ONLY (NEVER PUT JIB PENDANTS INTO TENSION). CONTINUE TO BOOM UP AND PERIODICALLY LUFF UP TO REMOVE EXCESS JIB PENDANT SLACK.

CAUTION: FAILURE TO MAINTAIN A MINIMUM ANGLE OF 74° BETWEEN JIB BUTT AND JIB STRUT WHILE RAISING MAY CAUSE JIB STRUT TO SNAP OVER CENTER AND CRASH THE JIB BUTT CAUSING DAMAGE.

NOTE: MAXIMUM BOOM ANGLE ALLOWED WITH JIB HANGING VERTICAL IS 75°.

INSTALL BLOCK/HOOK AND WEIGHT BALL. CONTINUE TO BOOM UP TO DESIRED ANGLE AND LUFF UP TO DESIRED WORKING RADIUS (SEE LUFFING JIB RAISING PROCEDURE 8248A FOR BOOM TO JIB ANGLE REQUIREMENTS).

NOTE: REVERSE SEQUENCE TO LOWER AND FOLD LUFFING JIB. BOOM TO JIB CLEARANCE WILL DETERMINE TO WHAT DEGREE BOOM AND JIB CAN BE LOWERED. CLEARANCE POINTS WILL VARY DEPENDING ON BOOM/JIB COMBINATION, GROUND CONDITIONS AND BLOCKING USED. CLEARANCE POINTS AT JIB STOP STRUT TO JIB BUTT AND BOOM TOP, JIB INSERT TO BOOM LACING, JIB POINT WHEEL TO BOOM LACING AND JIB TOP WIRE ROPE GUIDE ASSEMBLY TO GROUND SHOULD BE MONITORED AS BOOM/JIB IS LOWERED. A MEANS TO START JIB UNDER BOOM WHEN FOLDING MAY BE REQUIRED.

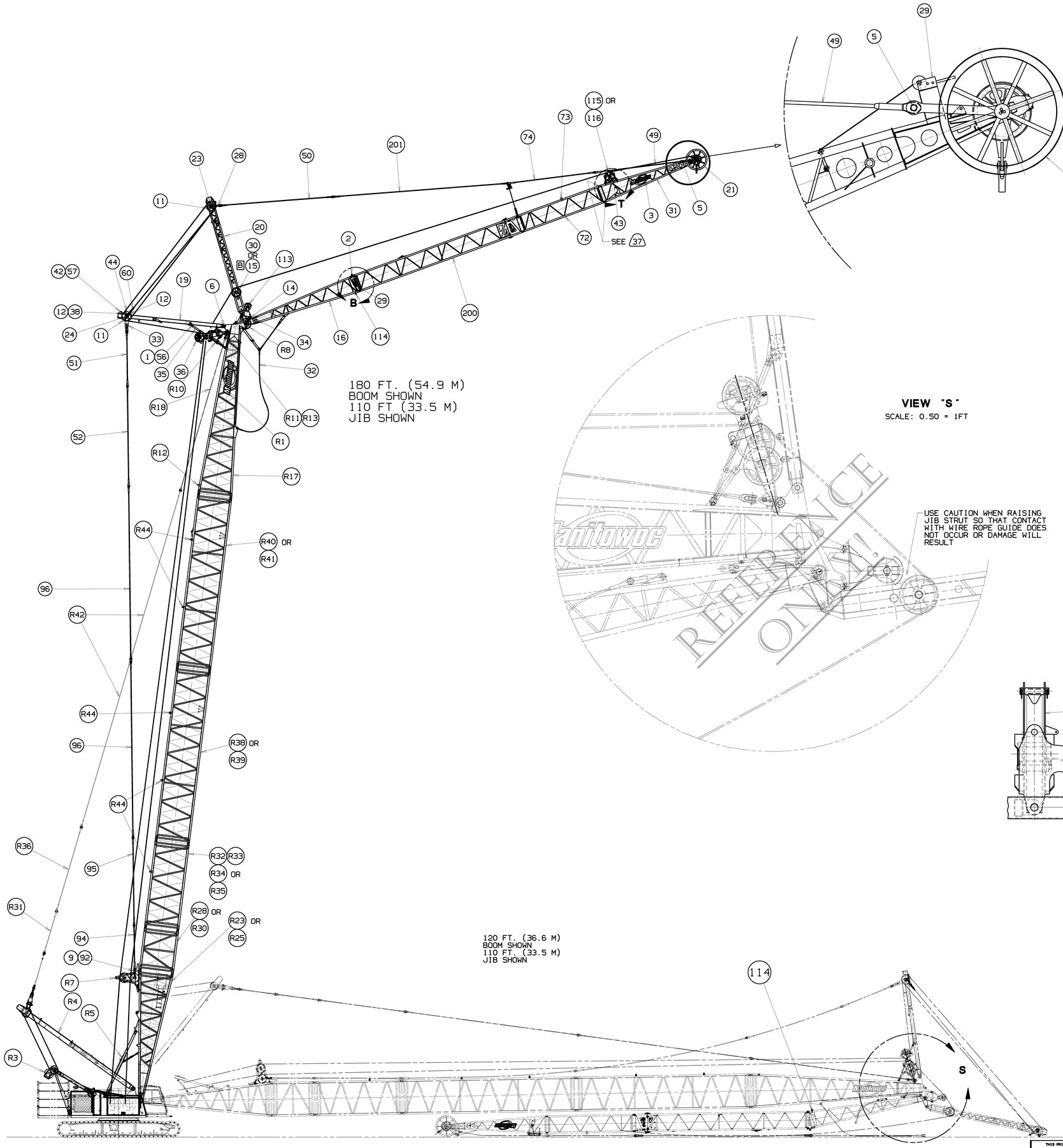

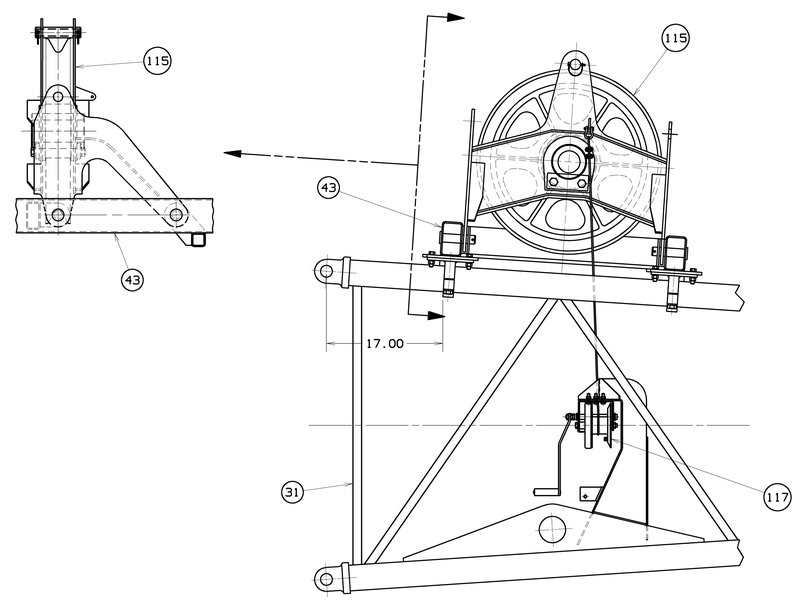

DWG. NO. A09286

SHT 6 OF 9

PRIVATE LABELING REQUIREMENT TO CONFORM TO ENGINEERING SPECIFICATION 6829103794 FOR COMPONENTS LISTED IN GDS500-05-035

DATE 11-13-03

PATTERN NO.

THIS PRINT REMAINS THE PROPERTY OF MANITOWOC CRANES, INC. ALL INFORMATION CONTAINED THEREON IS CONFIDENTIAL. IT IS LOANED, SUBJECT TO RETURN UPON DEMAND, AND ON EXPRESS CONDITION THAT IT IS NOT TO BE COPIED OR USED DIRECTLY OR INDIRECTLY IN ANY WAY WHATSOEVER DETRIMENTAL TO OUR INTERESTS.

TOLERANCE UNLESS OTHERWISE SPECIFIED			
DECIMAL PLACES	FABRICATION ≤ 10 FEET	FABRICATION > 10 FEET	MACHINING
(1) PLACE 0.0	±.12	±.18	±.03
(2) PLACE 0.00	±.06	±.12	±.015
(3) PLACE 0.000			±.005
ANGLES	±1°30'		±0°30'

MACHINING TOLERANCE APPLIES TO THIS DRAWING ONLY

SCALE 1:25 IF

Manitowoc Cranes, Inc.
Manitowoc, Wisconsin

DR. RH
CK. RH
APP. BLS
MODEL 999

JIB LUFFING ASSEMBLY
FOLD UNDER JIB #135
#22EL BOOM WITH STOW
PEND W/INTERMED FALL

DWG. NO. A09286

DO NOT SCALE THIS DRAWING

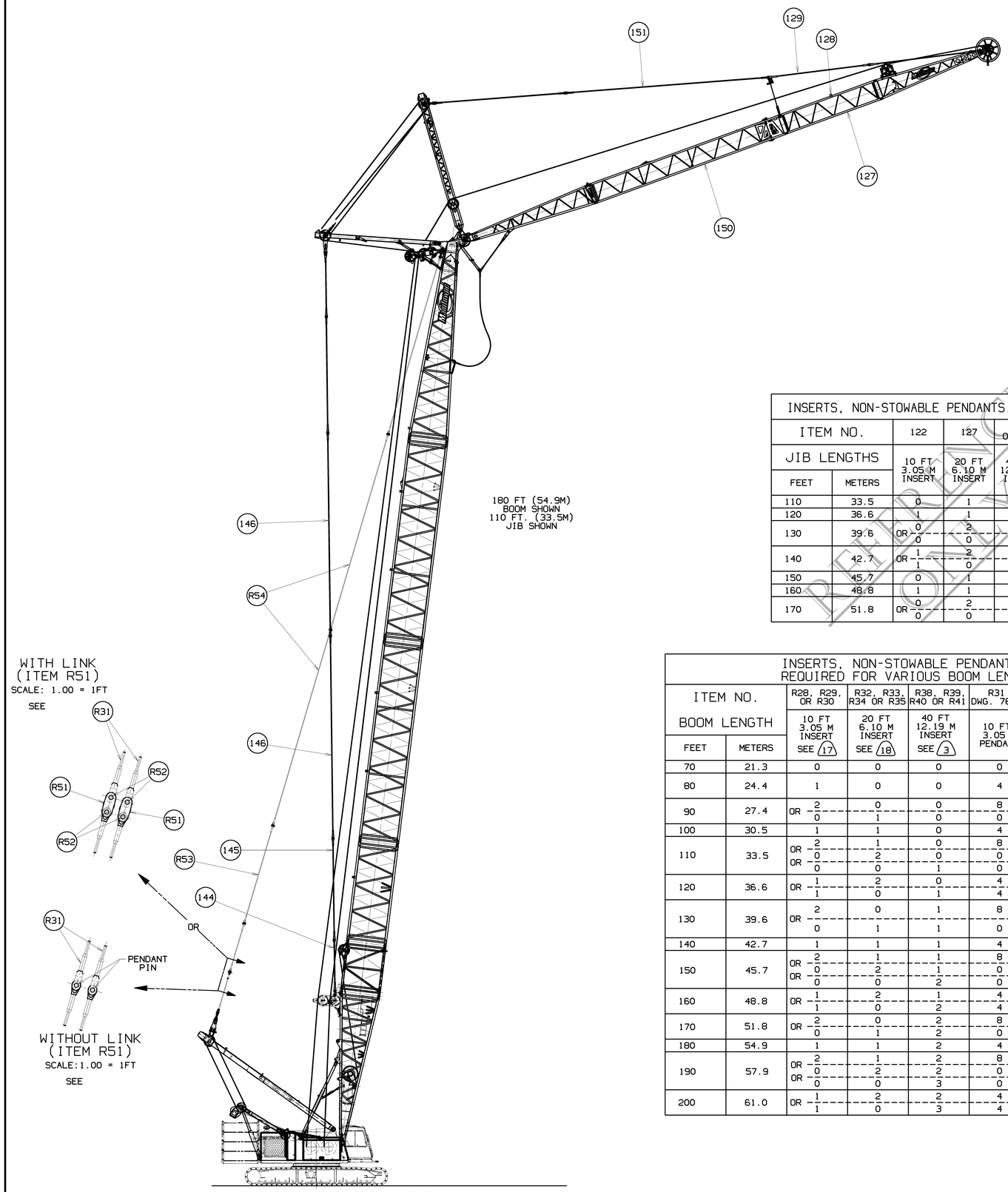

#22EL BOOM/#135 JIB ASSEMBLY WITH NON-STOWABLE PENDANTS

BILL OF MATERIAL					
ITEM NO.	NO. REQ'D	SEC-TION	DESCRIPTION	MATERIAL	CODE NO. OR DWG. NO
REFERENCE BOOM PARTS LIST (BOOM RIGGING ASSEMBLY #22EL WITH NON-STOWABLE PENDANTS					
R51			LINK	177609	59
R52			PIN	177613	59
R53			PENDANT 20 FT. (6.10M)	276862	11, 19
R54			PENDANT 40 FT. (12.19M)	276863	11, 19
R55					

BILL OF MATERIAL					
ITEM NO.	NO. REQ'D	SEC-TION	DESCRIPTION	MATERIAL	CODE NO. OR DWG. NO
INSERT 10 FT. (3.05M) WITH NON-STOWABLE PENDANTS					
121	4		BOOM JOINT PIN	70366	22
122	1		INSERT 10 FT. (3.05M)	180136	19
123	1		TIMBER	192022	22
124	2		PENDANT 10 FT. (3.05M)	276823	24
125					
INSERT 20 FT. (6.10M) WITH NON-STOWABLE PENDANTS					
126	4		BOOM JOINT PIN	70366	22
127	1		INSERT 20 FT. (6.10M)	180137	19
128	1		TIMBER	192022	22
129	2		PENDANT 20 FT. (6.10M)	276825	24
130					
INSERT 40 FT. (12.19M) W/OUT JIB BACKSTAY LUGS & W/ NON-STOWABLE PENDANTS					
131	1		INSERT 40 FT. (12.19M)	48208-2	19
132	4		BOOM JOINT PIN	70366	22
133	1		TIMBER	192022	22
134	2		PENDANT 40 FT. (12.19M)	276892	24
135					
INSERT 40 FT. (12.19M) WITH JIB BACKSTAY LUGS & WITH NON-STOWABLE PENDANTS					
136	1		INSERT 40 FT. (12.19M)	48208-3	19
137	4		BOOM JOINT PIN	70366	22
138	1		TIMBER	192022	22
139	2		PENDANT 40 FT. (12.19M)	276892	24
140					
INSERT 40 FT. (12.19) ASSEMBLY WITH INTERMEDIATE FALL & WITH NON-STOWABLE PENDANTS					
150	1		INSERT 40 FT.(12.19M) ASSEMBLY	A07059	27
151	2		PENDANT 40 FT. (12.19M)	276892	24
152					
153					
154					
155					
PENDANTS & LINKS - JIB BACKSTAY BOOM LENGTHS 70-90 FT. (21.3-27.4M)					
141	2		PENDANT 10 FT. (3.05M)	276823	24, 42
142					
143					
PENDANT 10 FT. (3.05M) JIB BACKSTAY FOR USE WITH 10 FT. BOOM INSERT					
144	2		PENDANT 10 FT. (3.05M)	276823	24
PENDANT 20 FT. (6.10M) JIB BACKSTAY FOR USE WITH 20 FT. BOOM INSERT					
145	2		PENDANT 20 FT. (6.10M)	276825	24
PENDANT 40 FT. (12.19M) JIB BACKSTAY FOR USE WITH 40 FT. BOOM INSERT					
146	2		PENDANT 40 FT. (12.19M)	276892	24

ASSEMBLIES USED ON

REVISIONS

03-16-09 MER
A1 WAS
SHT 7 OF 8

DWG. NO.
A09286
SHT 7 OF 9

INSERTS, NON-STOWABLE PENDANTS, TIMBERS AND PINS REQ'D. FOR VARIOUS JIB LENGTHS

ITEM NO.		122	127	131 OR 136	150	124 DWG. 78145	129 DWG. 78145	134, 139 OR 151 DWG. 78145	123,128, 133 OR 138	121,126, 132 OR 137
JIB LENGTHS		10 FT 3.05 M INSERT	20 FT 6.10 M INSERT	40 FT 12.19 M INSERT	40 FT 12.19 M INSERT ASSY SEE 38	10 FT 3.05 M PENDANT	20 FT 6.10 M PENDANT	40 FT 12.19 M PENDANT	WIRE ROPE TIMBER	BOOM JOINT PIN
FEET	METERS									
110	33.5	0	1	0	1	0	2	2	3	8
120	36.6	1	1	0	1	2	2	2	4	12
130	39.6	0 OR 0	2	0	1	0	4	2	4	12
			0	1	1	0	0	4	4	8
140	42.7	1 OR 1	2	1	1	2	4	2	5	16
			0	1	1	2	0	4	5	12
150	45.7	0	1	1	1	0	2	4	5	12
160	48.8	1	1	1	1	2	2	4	6	16
170	51.8	0 OR 0	2	1	1	0	4	4	6	16
			0	2	1	0	0	6	6	12

REFERENCE ONLY

INSERTS, NON-STOWABLE PENDANTS, AND ROLLER GUIDES REQUIRED FOR VARIOUS BOOM LENGTHS

ITEM NO.		R28, R29, OR R30	R32, R33, R34 OR R35	R38, R39, R40 OR R41	R31 DWG. 76280	R53 DWG. 76280	R54 DWG. 76280	R44 OR R45	R51	R52
BOOM LENGTH		10 FT 3.05 M INSERT SEE 17	20 FT 6.10 M INSERT SEE 18	40 FT 12.19 M INSERT SEE 3	10 FT 3.05 M PENDANT	20 FT 6.10 M PENDANT	40 FT 12.19 M PENDANT	WIRE ROPE TIMBER	9.00 0.23 M LINK	PIN
FEET	METERS									
70	21.3	0	0	0	0	0	0	0	0	0
80	24.4	1	0	0	4	0	0	0	0	0
90	27.4	OR 2	0	0	8	0	0	0	0	0
		0	1	0	0	4	0	1	0	0
100	30.5	1	1	0	4	4	0	1	0	0
110	33.5	OR 2	1	0	8	4	0	1	0	0
		OR 0	2	0	0	8	0	2	0	0
		0	0	1	0	0	4	2	0	0
120	36.6	OR 1	2	0	4	8	0	2	0	0
		1	0	1	4	0	4	2	0	0
130	39.6	OR 2	0	1	8	0	4	2	0	0
		0	1	1	0	4	4	3	0	0
140	42.7	1	1	1	4	4	4	3	0	0
150	45.7	OR 2	1	1	8	4	4	3	0	0
		OR 0	2	1	0	8	4	4	0	0
		0	0	2	0	0	8	4	0	0
160	48.8	OR 1	2	1	4	8	4	4	0	0
		1	0	2	4	0	8	4	0	0
170	51.8	OR 2	0	2	8	0	8	4	0	0
		0	1	2	0	4	8	5	0	0
180	54.9	1	1	2	4	4	8	5	0	0
190	57.9	OR 2	1	2	8	4	8	5	4	8
		OR 0	2	2	0	8	8	6	4	8
		0	0	3	0	0	12	6	4	8
200	61.0	OR 1	2	2	4	8	8	6	4	8
		1	0	3	4	0	12	6	4	8

JIB BACKSTAY PENDANTS, LINKS & PINS REQUIRED FOR VARIOUS BOOM LENGTHS

ITEM NO.		141 & 144	145	146	89	92	87	9 & 86
BOOM LENGTH		10 FT 3.05 M PENDANT SEE 38	20 FT 6.10 M PENDANT SEE 38	40 FT 12.19 M PENDANT SEE 38	PENDANT LINK 39.00 (991mm)	PENDANT LINK 11.00 (279mm)	PENDANT LINK 24.00 (610mm)	PIN
FEET	METERS							
70	21.3	2	0	0	2	0	0	2
80	24.4	OR 4	0	0	2	0	0	2
		0	2	0	2	0	0	2
90	27.4	OR 6	0	0	2	0	0	2
		2	2	0	2	0	0	2
100	30.5	2	2	0	0	2	2	4
110	33.5	OR 4	2	0	0	2	2	4
		OR 0	4	0	0	2	2	4
		0	0	2	0	2	2	4
120	36.6	OR 2	4	0	0	2	2	4
		2	0	2	0	2	2	4
130	39.6	OR 4	0	2	0	2	2	4
		OR 0	2	2	0	2	2	4
		0	6	0	0	2	2	4
140	42.7	2	2	2	0	2	0	2
150	45.7	OR 0	0	4	0	2	0	2
		OR 0	4	2	0	2	0	2
		4	2	2	0	2	0	2
160	48.8	OR 2	4	2	0	2	0	2
		2	0	4	0	2	0	2
170	51.8	OR 4	0	4	0	2	0	2
		0	2	4	0	2	0	2
180	54.9	2	2	4	0	2	0	2
190	57.9	OR 4	2	4	0	2	0	2
		OR 0	0	6	0	2	0	2
		0	4	4	0	2	0	2
200	61.0	OR 2	4	4	0	2	0	2
		2	0	6	0	2	0	2

THIS PRINT REMAINS THE PROPERTY OF MANITOWOC CRANES, INC. ALL INFORMATION CONTAINED THEREON IS CONFIDENTIAL. IT IS LOANED, SUBJECT TO RETURN UPON DEMAND, AND ON EXPRESS CONDITION THAT IT IS NOT TO BE COPIED OR USED DIRECTLY OR INDIRECTLY IN ANY WAY WHATSOEVER DETRIMENTAL TO OUR INTERESTS.

TOLERANCE UNLESS OTHERWISE SPECIFIED

DECIMAL PLACES	FABRICATION ≤ 10 FEET	FABRICATION > 10 FEET	MACHINING
(1) PLACE 0.0	±.12	±.18	±.03
(2) PLACE 0.00	±.06	±.12	±.015
(3) PLACE 0.000			±.005
ANGLES	±1°30'		±0°30'

MACHINING TOLERANCES TO BE ADDED TO SITE DIMENSION AND/OR SURFACE

SCALE 1/2=1F
DR. RH
CK. RH
APP BLS

Manitowoc Cranes, Inc.
Manitowoc, Wisconsin
MODEL 999

JIB LUFFING ASSEMBLY
#22EL BOOM/#135 JIB
NON-STOWABLE PENDANTS
WITH INTERMEDIATE FALL

PRIVATE LABELING REQUIREMENT TO CONFORM TO ENGINEERING SPECIFICATION 6829103794 FOR COMPONENTS LISTED IN 605500-05-035

DATE 11-13-03

PATTERN NO.

DWG. NO. A09286

A SHT 7 OF 9

DO NOT SCALE THIS DRAWING

BILL OF MATERIAL						
ITEM NO.	NO. REQD.	SEC-TION	DESCRIPTION	LENGTH IN	MATERIAL	CODE NO. OR DWG. NO.

ASSEMBLIES USED ON

REVISIONS

03-16-09 MER
A WAS
SHT 8 OF 8

FOLD-UNDER LUFFING JIB RAISING CONDITIONS

(SEE LUFFING JIB RAISING PROCEDURE 8248A)

NOTE: THE FOLLOWING IS REQUIRED FOR FOLD-UNDER OPERATION.

A) WIRE ROPE GUIDE ASSEMBLY (ITEM 113) MUST BE INSTALLED.

B) ADAPTER ASSEMBLY (ITEM 29) MUST BE EQUIPPED WITH PIN PULLER COMPONENTS CALLED FOR ON (ITEM 29 REF.).

C) WIRE ROPE WINCH ASSEMBLY (ITEM 117) AND WIRE ROPE GUIDE SINGLE SHEAVE BRACKET ASSEMBLY (ITEM 115) MUST BE INSTALLED.

NOTE: WHEN JIB BUTT IS FOLDED UNDER BOOM TOP (JIB PENDANTS NOT ATTACHED) USE CAUTION DURING ASSEMBLY AND RAISING OR LOWERING OF JIB THAT JIB STRUT DOES NOT CRASH INTO WIRE ROPE GUIDE ON FRONT OF BOOM TOP OR DAMAGE WILL OCCUR (SEE VIEW "P").

BOOM UP UNTIL THERE IS ENOUGH CLEARANCE TO CONNECT INTERMEDIATE SUSPENSION PENDANTS AND LINK TO BEAM (ITEM 215). CONTINUE TO BOOM UP UNTIL THERE IS ENOUGH CLEARANCE FOR WIRE ROPE GUIDE MOUNTED TO THE JIB TOP TO BE LOWERED WITH THE POSITIONING WINCH AND PINNED IN ITS WORKING POSITION. CONTINUE TO BOOM UP UNTIL JIB STRUT CAN HANG APPROXIMATELY VERTICAL. CONNECT JIB PENDANTS AND LINKS TO JIB POINT AND JIB STRUT TOP (EXCESS PENDANT SLACK SHOULD BE AT THE JIB STRUT END). LUFF UP TO REMOVE EXCESS JIB PENDANT SLACK ONLY (NEVER PUT JIB PENDANTS INTO TENSION). CONTINUE TO BOOM UP AND PERIODICALLY LUFF UP TO REMOVE EXCESS JIB PENDANT SLACK.

CAUTION: FAILURE TO MAINTAIN A MINIMUM ANGLE OF 74° BETWEEN JIB BUTT AND JIB STRUT WHILE RAISING MAY CAUSE JIB STRUT TO SNAP OVER CENTER AND CRASH THE JIB BUTT CAUSING DAMAGE.

NOTE: MAXIMUM BOOM ANGLE ALLOWED WITH JIB HANGING VERTICAL IS 75°.

INSTALL BLOCK/HOOK AND WEIGHT BALL. CONTINUE TO BOOM UP TO DESIRED ANGLE AND LUFF UP TO DESIRED WORKING RADIUS (SEE LUFFING JIB RAISING PROCEDURE 8248A FOR BOOM TO JIB ANGLE REQUIREMENTS).

NOTE: REVERSE SEQUENCE TO LOWER AND FOLD LUFFING JIB. BOOM TO JIB CLEARANCE WILL DETERMINE TO WHAT DEGREE BOOM AND JIB CAN BE LOWERED. CLEARANCE POINTS WILL VARY DEPENDING ON BOOM/JIB COMBINATION, GROUND CONDITIONS AND BLOCKING USED. CLEARANCE POINTS AT JIB STOP STRUT TO JIB BUTT AND BOOM TOP, JIB INSERT TO BOOM LACING, JIB POINT WHEEL TO BOOM LACING AND JIB TOP WIRE ROPE GUIDE ASSEMBLY TO GROUND SHOULD BE MONITORED AS BOOM/JIB IS LOWERED. A MEANS TO START JIB UNDER BOOM WHEN FOLDING MAY BE REQUIRED.

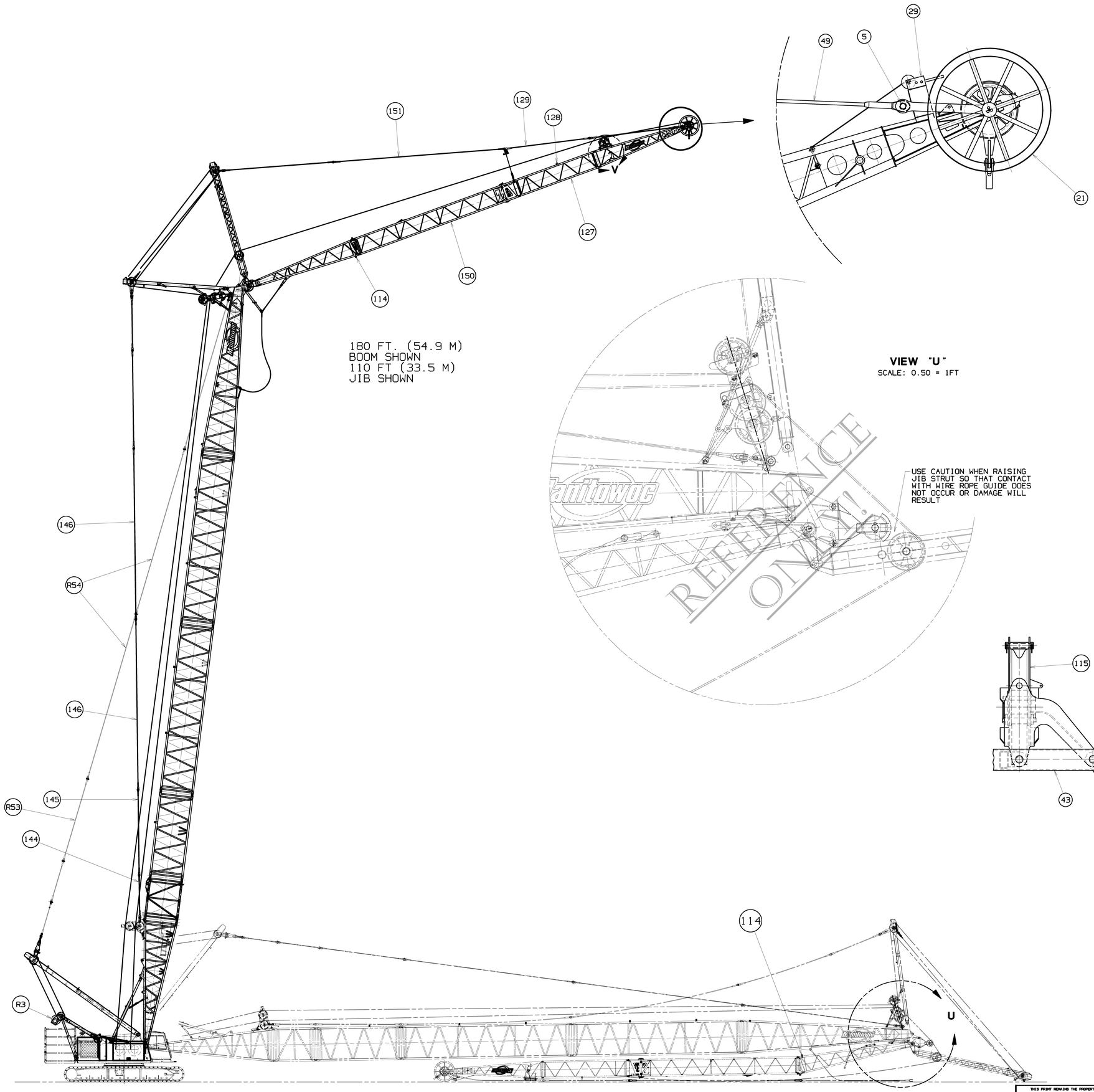

VIEW "U"
SCALE: 0.50 = 1FT

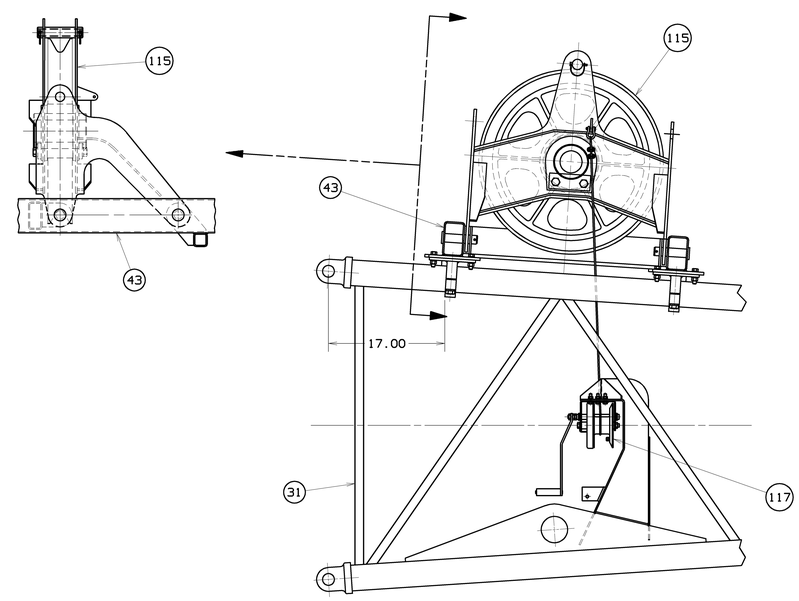

VIEW "V"
SCALE: 1.50 = 1FT

DWG. NO.
A09286

SHT 8 OF 9

PRIVATE LABELING REQUIREMENT TO CONFORM TO ENGINEERING SPECIFICATION 6829103794 FOR COMPONENTS LISTED IN GDS500-05-035

DATE
11-13-03

PATTERN NO.

THIS PRINT REMAINS THE PROPERTY OF MANITOWOC CRANES, INC. ALL INFORMATION CONTAINED THEREON IS CONFIDENTIAL. IT IS LOANED, SUBJECT TO RETURN UPON DEMAND, AND ON EXPRESS CONDITION THAT IT IS NOT TO BE COPIED OR USED DIRECTLY OR INDIRECTLY IN ANY WAY WHATSOEVER DETRIMENTAL TO OUR INTERESTS.

TOLERANCE UNLESS OTHERWISE SPECIFIED			
DECIMAL PLACES	FABRICATION ≤ 10 FEET	FABRICATION > 10 FEET	MACHINING
(1) PLACE 0.0	±.12	±.18	±.03
(2) PLACE 0.00	±.06	±.12	±.015
(3) PLACE 0.000			±.005
ANGLES	±1°30'		±0°30'

MACHINING TOLERANCE APPLIES TO THE FINISHED DIMENSION AND/OR SURFACE

SCALE 1/2=1'

DR. RH
CK. RH
APP BLS

Manitowoc Cranes, Inc.
Manitowoc, Wisconsin

MODEL 999

JIB LUFFING ASSEMBLY
FOLD UNDER #135 JIB
#22EL BOOM NON-STOW
PEND-W/INTERMED FALL

DWG. NO. A09286

DO NOT SCALE THIS DRAWING

A SHT 8 OF 9

BILL OF MATERIAL						
ITEM NO.	NO. REQD.	SEC-TION	DESCRIPTION	LENGTH IN	MATERIAL	CODE NO. OR DWG. NO.

ASSEMBLIES USED ON

REVISIONS

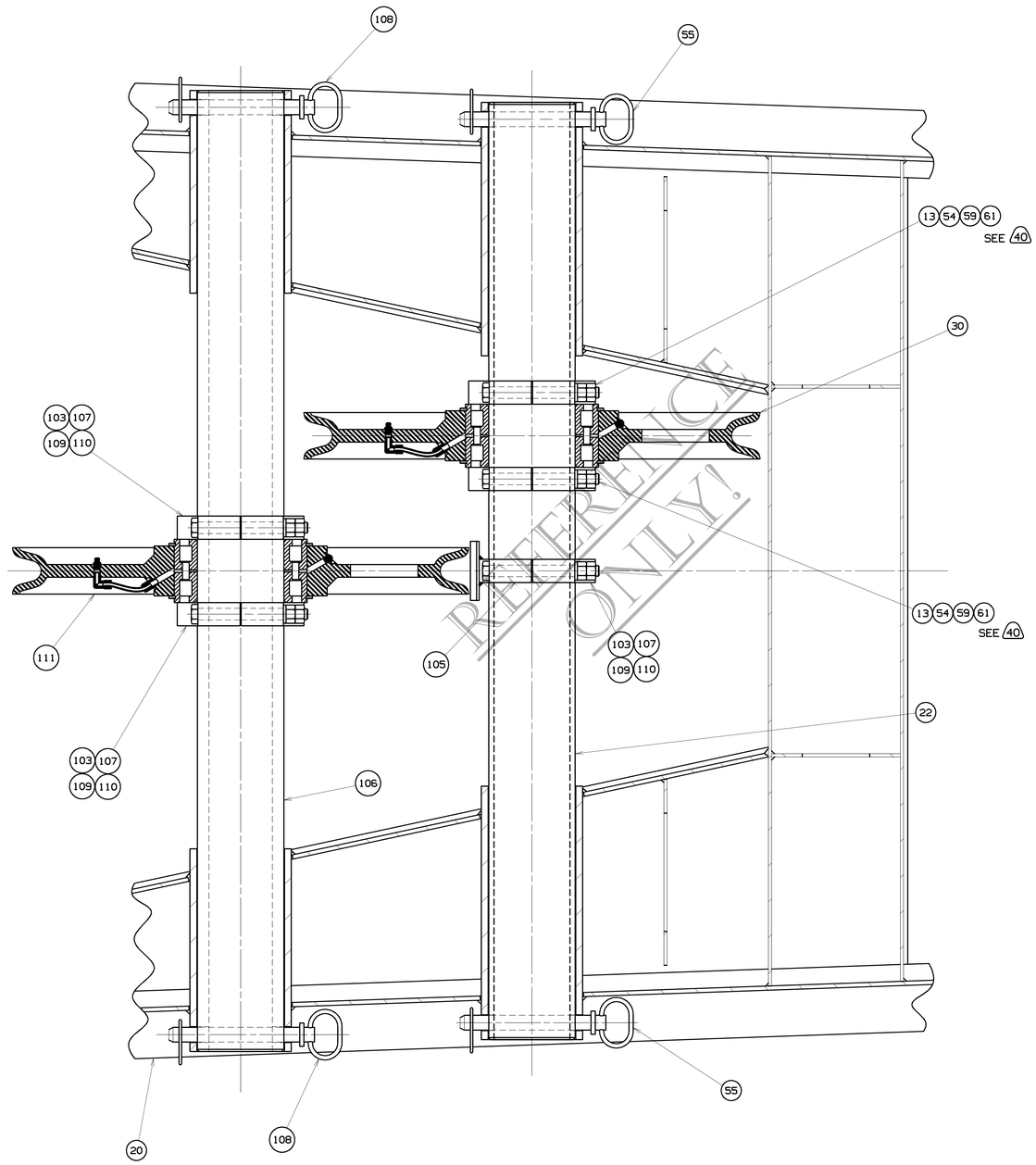

REFERENCE ONLY!

SECTION "N" - "N"

SHOWN ITEMS 30 & 111. FOR ORIENTATION OF GREASING ONLY

SCALE:2.00 = 1FT

DWG. NO. A09286

SHT 9 OF 9

PRIVATE LABELING REQUIREMENT TO CONFORM TO ENGINEERING SPECIFICATION 6829103734 FOR COMPONENTS LISTED IN GOS500-05-035

DATE 03-16-09

PATTERN NO.

THIS PRINT REMAINS THE PROPERTY OF MANITOWOC CRANES, INC. ALL INFORMATION CONTAINED THEREON IS CONFIDENTIAL. IT IS LOANED, SUBJECT TO RETURN UPON DEMAND, AND ON EXPRESS CONDITION THAT IT IS NOT TO BE COPIED OR USED DIRECTLY OR INDIRECTLY IN ANY WAY WHATSOEVER DETRIMENTAL TO OUR INTERESTS.

TOLERANCE UNLESS OTHERWISE SPECIFIED				
DECIMAL PLACES	FABRICATION		MACHINING	
	≤ 10 FEET	> 10 FEET		
(1) PLACE 0.0	±.12	±.18	±.03	ON MACHINING TOLERANCE SEE NOTE ON DIMENSION AND/OR SURFACE
(2) PLACE 0.00	±.06	±.12	±.015	
(3) PLACE 0.000			±.005	
ANGLES	±1°30'		±0°30'	

SCALE

DR. MER

CK. MER

APP PMP

Manitowoc Cranes, Inc.
Manitowoc, Wisconsin

MODEL 999

JIB LUFFING ASSEMBLY
#22EL BOOM/#135 JIB
WITH STOWABLE PENDANTS
WITH INTERMEDIATE FALL

DWG. NO. A09286

DO NOT SCALE THIS DRAWING

SHT 9 OF 9