REQ'D FOR VARIOUS JIB LENGTHS				
ITEM NUMBER		63	64 (5)	65
JIB LENGTH		20 FT INSERT (6.1m)	19 FT-2.00 PENDANT (5.8m)	WIRE ROPE TIMBER GUARD
FEET	METERS			
60	18.3	1	2	1
80	24.4	2	4	2
100	30.5	3	6	3
120	36.6	4	8	4

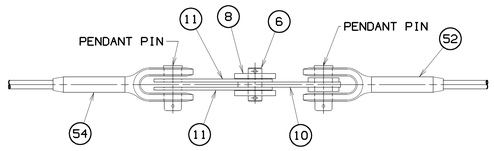

VIEW "C"-"C"
SCALE: 1.50=1FT

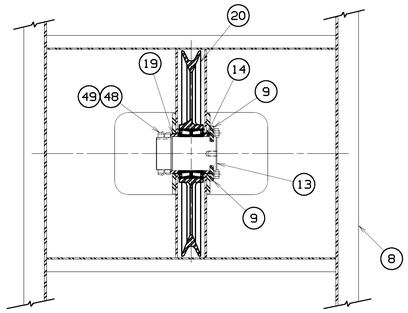

SECTION "B"-"B"
SCALE: 1.50=1FT

(1) APPLY LOCTITE 242 (MANITOWOC NO. 622293) OR EQUIVALENT TO SCREW 614083 AT ASSEMBLY.

(2) ON DWG. 73026

(3) CAN BE USED FOR DEAD END WITH 2 PART LINE. MUST BE REMOVED WHEN 2, 3 OR 4 PART LINE AND/OR UPPER DEAD END LUG IS USED.

(4) TIGHTEN BEARING LOCKNUT (ITEM 48) SUFFICIENTLY TO CLAMP BEARING INNER RACE.

(5) ON DWG. 77535

C (6) INSTALL TIMBERS SO THEY ARE FREE TO SLIDE UNDER THERMAL EXPANSION/CONTRACTION OF PLASTIC.

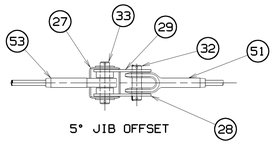

VIEW "E"-"E"
SCALE: 1.50=1FT

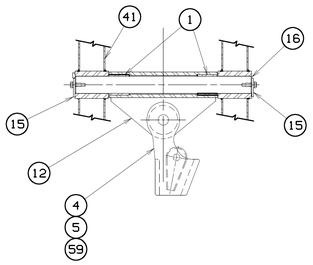

SECTION "F"-"F"
SCALE: 1.50=1FT.
(3)

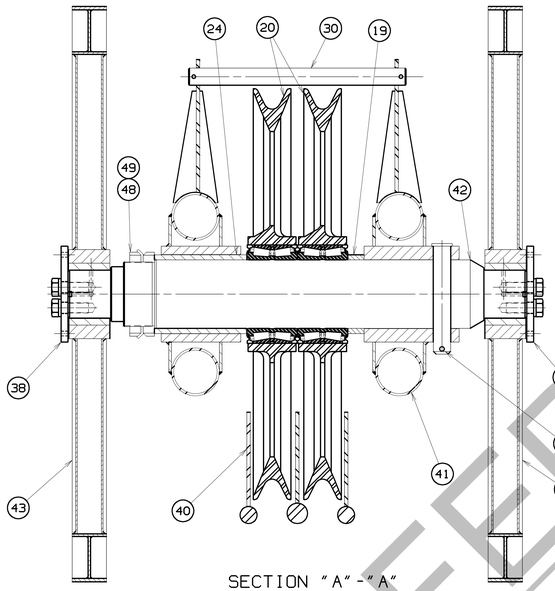

SECTION "A"-"A"
SCALE:3.00=1FT

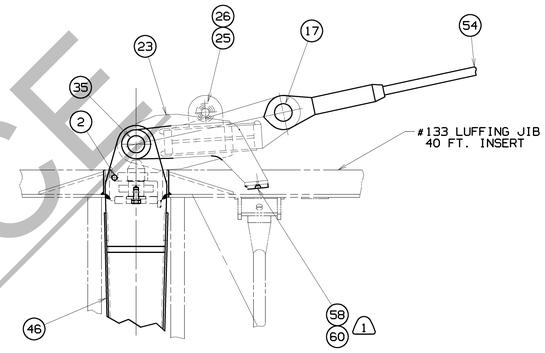

A VIEW "D"
SCALE: 1.50=1FT

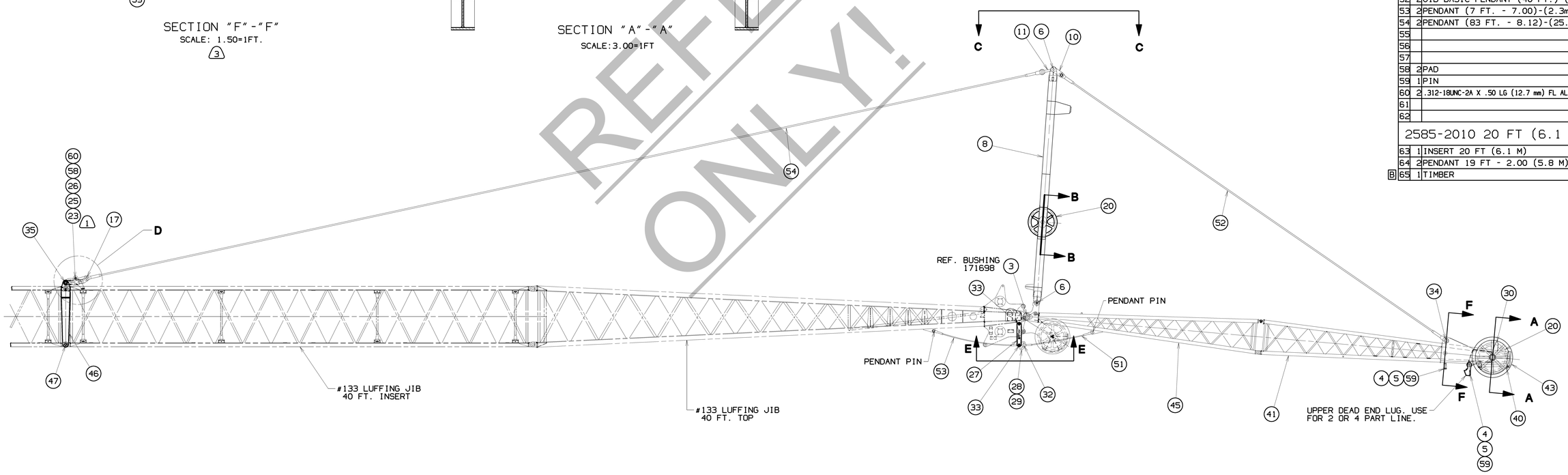

BASIC 40 FT. (12.19m) JIB W/5° OFFSET SHOWN

REFERENCE ONLY!

BILL OF MATERIAL

ITEM NO.	NO. REQD.	DESCRIPTION	MATERIAL	CODE NO. OR DWG. NO.	
		2585-2000 BASIC 40 FT. (12.2 M) JIB ASSEMBLY			
1	2	BUSHING		18129	
2	1	PIN		75465	
3	2	PIN		139102	
4	1	SOCKET		162233	
5	1	WEDGE		162234	
6	4	PIN		166901	
7					
8	1	JIB STRUT (20 FT)-(6.1m)		169803	
9	2	PIN KEEPER		169810	
10	2	LINK		169824	
11	4	LINK		169825	
12	1	DEAD END BAIL		169832	3
13	1	PIN		169836	
14	1	SPACER		169837	
15	2	END PLATE		169838	
16	1	PIN		169846	3
17	2	PIN		169849	
18					
19	2	SPACER		170677	
20	3	SHEAVE ASSEMBLY FOR 1.125 WIRE ROPE		171250	
21					
22					
23	1	BACKSTAY SUPPORT		192327	
24	1	SPACER		171845	
25	2	ROLLER		171848	
26	1	SHAFT		171849	
27	1	STRUT		192488	
28	2	LINK		171857	
29	2	LINK		171858	
30	1	ROPE GUARD		171863	
31	1	PIN		171864	
32	2	PIN		171867	
33	4	PIN		171868	
34	2	PIN		171869	
35	2	PIN		171870	
36					
37					
38	2	END PLATE		172110	
39					
40	1	ROPE GUARD		172222	
41	1	JIB TOP (20 FT)-(6.1m)		172680	
42	1	SHAFT		179171	
43	2	WHEEL ASSEMBLY		179175	
44					
45	1	JIB BUTT #140 (20 FT)- (6.1m)		192318	
46	2	LINK		193021	
47	2	BOOM JOINT PIN		192366	
48	4	BEARING LOCKNUT		225105	4
49	2	BEARING LOCKWASHER		225111	
50					
51	2	PENDANT (6 FT. - 0.00)-(1.8m)		276785	2
52	2	JIB BASIC PENDANT (40 FT.)-(12-19m)		276935	5
53	2	PENDANT (7 FT. - 7.00)-(2.3m)		277317	2
54	2	PENDANT (83 FT. - 8.12)-(25.5m)		277469	5
55					
56					
57					
58	2	PAD		554165	
59	1	PIN		563960	
60	2	.312-18UNC-2A X .50 LG (12.7 mm) FL AL HD CAPSCR		614083	1
61					
62					
		2585-2010 20 FT (6.1 M) INSERT			
63	1	INSERT 20 FT (6.1 M)		172679	
64	2	PENDANT 19 FT - 2.00 (5.8 M)		277360	5
B 65	1	TIMBER		193273	6

ASSEMBLIES USED ON

REVISIONS
10-03-06 JRK
A UPDATED VIEW PER REV OF 192327
09-27-11 RDA
B WAS 171477
C ADDED NOTE

DWG. NO. 193022

PRIVATE LABELING REQUIREMENT TO CONFORM TO ENGINEERING SPECIFICATION 6829103794 FOR COMPONENTS LISTED IN 605500-05-035

DATE 12-16-98

PATTERN NO.

DWG. NO. 193022

THIS PRINT REMAINS THE PROPERTY OF MANITOWOC CRANES, INC. ALL INFORMATION CONTAINED THEREON IS CONFIDENTIAL. IT IS LOANED, SUBJECT TO RETURN UPON DEMAND, AND ON EXPRESS CONDITION THAT IT IS NOT TO BE COPIED OR USED DIRECTLY OR INDIRECTLY IN ANY WAY WHATSOEVER DETRIMENTAL TO OUR INTERESTS.

TOLERANCE UNLESS OTHERWISE SPECIFIED				
DECIMAL PLACES	FABRICATION		MACHINING	
	≤ 10 FEET	> 10 FEET		FOR MACHINING TOLERANCE REFER TO SITE DIMENSION AND/OR SURFACE
(1) PLACE 0.0	±.12	±.18	±.03	
(2) PLACE 0.00	±.06	±.12	±.015	
(3) PLACE 0.000			±.005	
ANGLES	±1°30'		±0°30'	

SCALE .31=1FT
DR. CJW
CK. DP
APP. GMP

Manitowoc Cranes, Inc.
Manitowoc, Wisconsin
MODEL 2250, M-250,
MAXER 225

JIB ASSEMBLY
#140 JIB
1.25 SWAGED PENDANTS
WITH 133 LUFFING JIB

DWG. NO. 193022

DO NOT SCALE THIS DRAWING