JIB WORKING RANGE - TABLE "A"			
APPROX. JIB ANGLE	JIB LENGTH		
	80 FT	100 FT	120 FT
6°	9 FT 0	13 FT 0	15 FT 6
12°	17 FT 0	23 FT 0	27 FT 6
20°	27 FT 0	35 FT 6	42 FT 6

REQ'D. FOR VARIOUS JIB LENGTHS					
JIB LENGTH	20 FT. INSERT DWG. NO. 181662-2	40 FT. INSERT ~~DWG. 49682-2~~ OR 49682-3	18 FT. 3½ PENDANT 277115 DWG. NO. 136526	WIRE ROPE GUIDE DWG. NO. 93799	WIRE ROPE ROLLER GUIDE DWG. NO. 73907
80 FT.	0	0	0	0	0
100 FT.	1	0	4	1	0
120 FT.	0	1	8	1	1

REQ'D. FOR VARIOUS BOOM LENGTHS - TABLE "B" (F)				
BOOM LENGTH	19 FT. 7¾ PENDANT 277130 DWG. NO. 136526	39 FT. 3½ PENDANT 277131 DWG. NO. 136526	DIM "B"	
			*63 BOOM	*65 BOOM
180 FT.	0	0	80 FT.	80 FT.
200 FT.	0	0	100 FT.	100 FT.
220 FT.	4	0	120 FT.	120 FT.
240 FT.	0	4	140 FT.	140 FT.
260 FT.	4	4	160 FT.	160 FT.
280 FT.	4	4	160 FT.	180 FT.
300 FT.	4	4	160 FT.	160 FT.
320 FT.	4	4	160 FT.	180 FT.
340 FT.	4	4	160 FT.	160 FT.
360 FT.	4	4	160 FT.	160 FT.
380 FT.	4	4	160 FT.	160 FT.

REQ'D FOR VARIOUS JIB OFFSETS - TABLE "C"			
DWG NO.	145071	146123	136526
CODE NO.			277134
APPROX JIB ANGLE	LINK 15-1/2" LG	LINK 61-3/4" LG	PENDANT 8'-8" LG
6°	2	0	0
12°	0	2	0
20°	2	0	4

BILL OF MATERIAL

ITEM NO.	NO. REQ'D	SEC. NO.	DESCRIPTION	LENGTH FT	LENGTH IN	MATERIAL	CODE NO. OR DWG. NO.	REMARKS

ASSEMBLIES USED ON

REVISIONS

5-17-79 D.W.D.
(A) NO. REQ'D. CORR.
6-24-81 CRP
(B) NOTE ADDED
8-17-81 CRP
(C) *65 BOOM ADDED
(D) DELETED
6-10-83 DCB
(E) MOVED FROM BASIC
11-29-83 CRP
(F) CHART REVISED
(G) NOTE ADDED

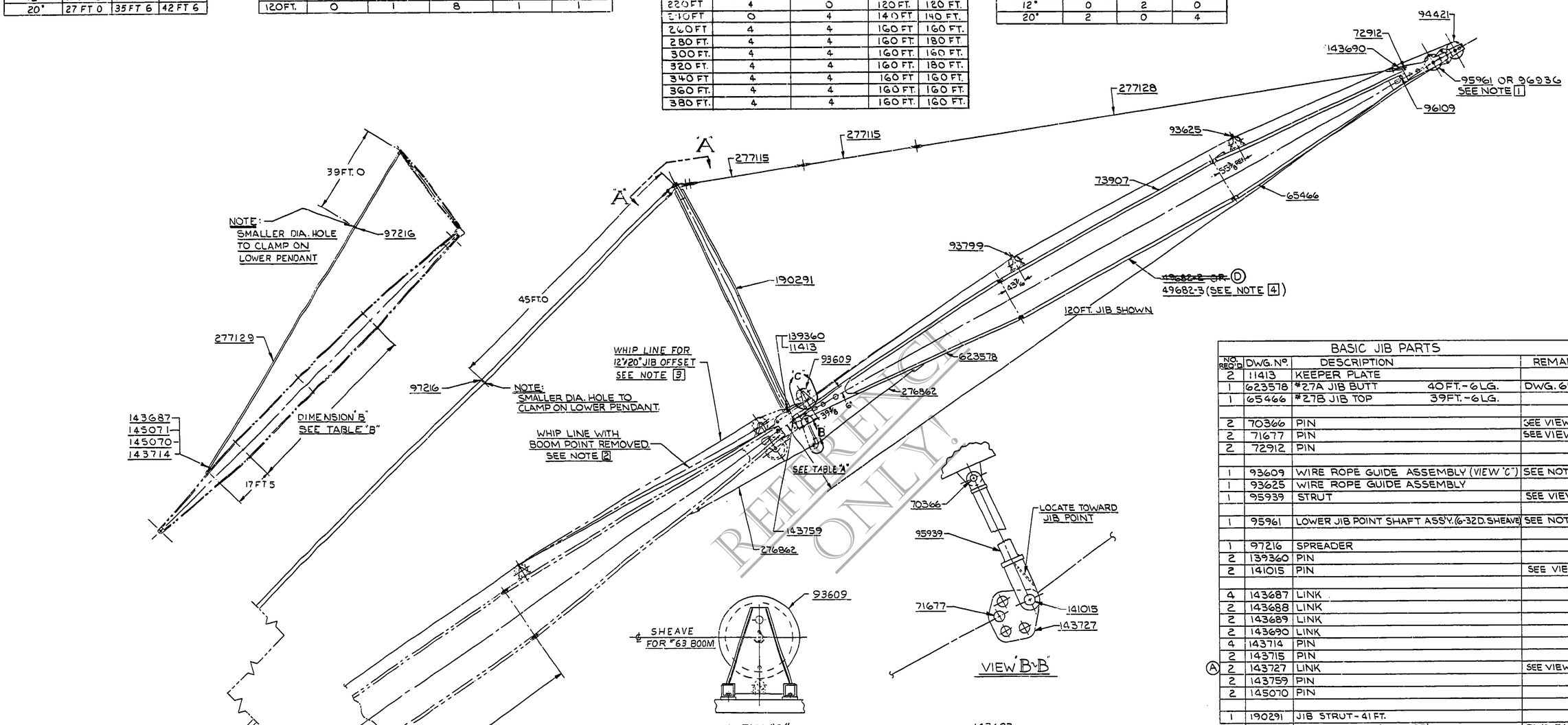

BASIC JIB PARTS				
NO. REQ'D	DWG. Nº.	DESCRIPTION		REMARKS
2	11413	KEEPER PLATE		
1	623578	#27A JIB BUTT	40 FT.-6 LG.	DWG. 65049
1	65466	#27B JIB TOP	39 FT.-6 LG.	
2	70366	PIN		SEE VIEW "B"
2	71677	PIN		SEE VIEW "B"
2	72912	PIN		
1	93609	WIRE ROPE GUIDE ASSEMBLY (VIEW "C")		SEE NOTE 2 & 3
1	93625	WIRE ROPE GUIDE ASSEMBLY		
1	95939	STRUT		SEE VIEW "B"
1	95961	LOWER JIB POINT SHAFT ASS'Y. (6-32 D. SHEAVE)		SEE NOTE 1
1	97216	SPREADER		
2	139360	PIN		
2	141015	PIN		SEE VIEW "B"
4	143687	LINK		
2	143688	LINK		
2	143689	LINK		
2	143690	LINK		
4	143714	PIN		
2	143715	PIN		
(A) 2	143727	LINK		SEE VIEW "B"
2	143759	PIN		
2	145070	PIN		
1	190291	JIB STRUT - 41 FT.		
4	276862	PENDANT 20 FT. (JIB STOP)		DWG. 76280
4	277128	PENDANT 79 FT. 2 (BASIC JIB)		DWG. 143671
4	277129	PENDANT 161 FT. 4 (BASIC BACKSTAY)		DWG. 143671

OPTIONAL PARTS			
1	94421	UPPER JIB POINT SHAFT ASSEMBLY	ONE 36 DIA. SHEAVE
1	96936	LOWER JIB POINT SHAFT ASS'Y. (4-32 D. SHEAVE)	USE WITH BLOCK #183057
(E) 1	96109	WIRE ROPE ANCHOR JOINT ASSEMBLY	

NOTE 3 (FOR 12°/20° OFFSET)
BOOM POINT & WIRE ROPE GUIDE #93609 MUST BE INSTALLED WITH WIRE ROPE OVER BOOM POINT GUIDE SHEAVE & UNDER WIRE ROPE GUIDE #93609 (SEE VIEW "C")

(B) NOTE 4
49682-3 REQUIRED FOR MACH. WITH JIB EXTENSION.

(G) NOTE 5
FOR *65 BOOM LENGTHS OF 280 AND 320 FT. JIB BACKSTAY LUGS ARE LOCATED 22 FT 3 FROM CONNECTOR ON 40 FT. INSERT.

NOTE 1:
EIGHT SHEAVE BOOM POINT ASSEMBLY #94395 MAY BE SUBSTITUTED FOR SIX SHEAVE ASSEMBLY #95961 OR FOUR SHEAVE ASSEMBLY #96936.

NOTE 2: (FOR 6° OFFSET)
INSTALL #93609 WITH BOOM POINT REMOVED.
REMOVE #93609 WITH BOOM POINT INSTALLED.

SUPERSEDES 190645 OF 10-24-78

SCALE 1/4" = 1'-0"
DR. R.A.D.
CK. [illegible]
APP. [illegible]
DWG. NO. 190645

MANITOWOC ENGINEERING CO.
MANITOWOC, WISCONSIN

MODEL 60FT FLATFORM RINGER, 4600 S-4 & RINGER S-3

#27A-27B JIB ASSEMBLY
80, 100, 120 FT.
ON 180 TO 380 FT. *63 BOOM
OR *65 BOOM (C)

DWG. NO. 190645

DATE 4-5-79
PATTERN NO.
CODE NO.
DWG. NO. 190645
60' PR-4

REFERENCE ONLY

DESIGN PRODUCTS CO. S-1-1-2 S-1-0 # 78
DO NOT SCALE THIS DRAWING