| RECOMMENDED FOR VARIOUS BOOM LENGTHS | | | | | | |
|---|---|---|---|---|---|---|
| DWG. NO. | 183158 | 190471 | 277124 | 277125 | 277126 | Ⓒ Ⓓ 97872 |
| | | | DWG. 144600 | | | |
| BOOM LENGTH | 20 FT INSERT | 40 FT. INSERT | 125 FT 10 PENDANT | 145 FT 0 PENDANT | 164 FT 4 PENDANT | WIRE ROPE TIMBER GUIDE ASSY. |
| 160 | 0 | 2 | 4 | 0 | 0 | 5 |
| 180 | 1 | 2 | 0 | 4 | 0 | 6 |
| 200 | 0 | 3 | 0 | 0 | 4 | 7 |

## INSERT NOTES

1. MAXIMUM NUMBER OF 20 FT. INSERTS - 2
2. 20 FT INSERTS TO BE LOCATED ADJACENT TO 40 FT. BOOM BUTT #65590

## PENDANT NOTE

1. PENDANTS FURNISHED IN SETS OF FOUR

## GENERAL NOTE

Ⓑ 1 BEND A MINIMUM OF TWO TABS ON EACH LOCKWASHER TO SECURE BOLTS - FOR REPLACEMENT OF BOOM JOINT LOCKWASHERS ORDER PARTS - 3": 145575 OR 3¼": 145576.

Ⓗ 2 TORQUE BOOM JOINT BOLTS TO 4500 FT LBS USING SAE #20 OIL LUBRICATION

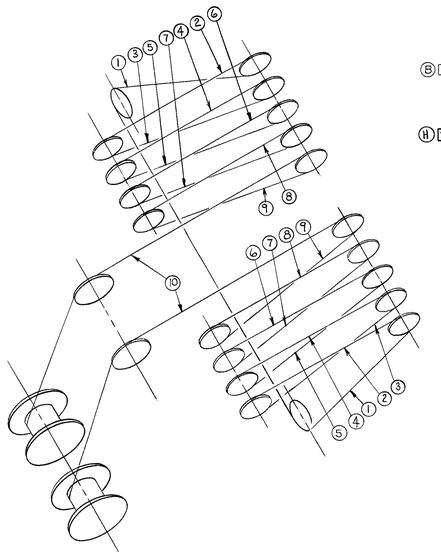


Ⓐ BOOM HOIST REEVING FOR 20 PART LINE
1900 FT. OF 1.125 - 6 X 26 WARRINGTON - SEALE
EXTRA IMPROVED PLOW STEEL. REGULAR LAY. IWRC
BREAKING STRENGTH 130,000 LBS. (719288)

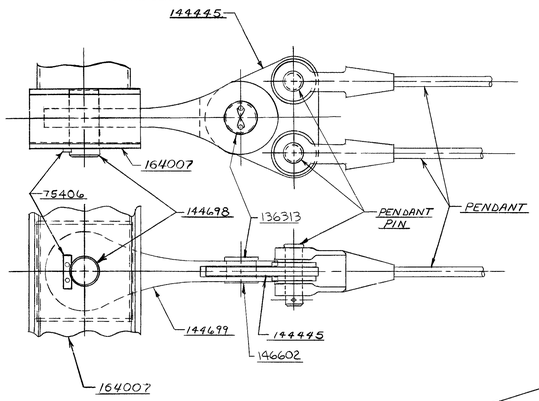


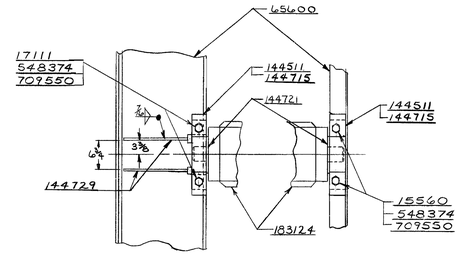


SECTION "C"-"C"

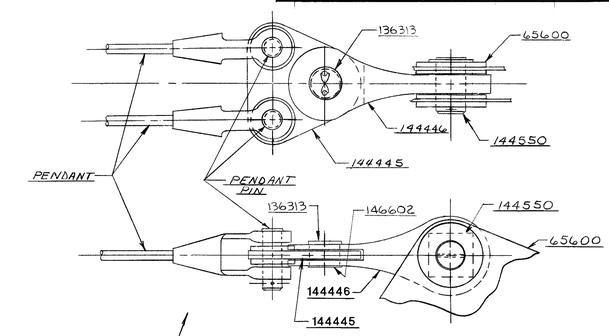


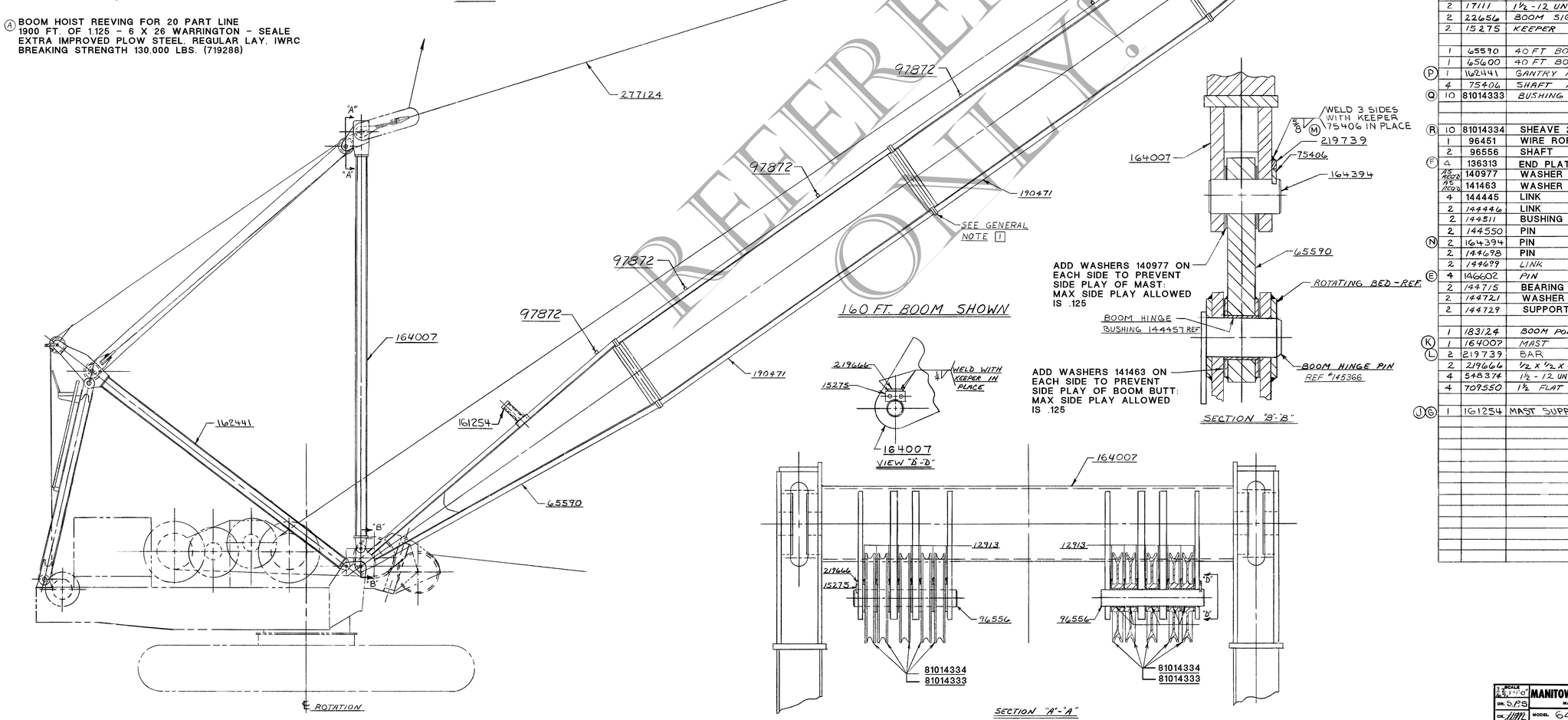


160 FT. BOOM SHOWN




VIEW "D"-"D"




SECTION "A"-"A"




SECTION "B"-"B"

| BILL OF MATERIAL | | | | | | | | |
|---|---|---|---|---|---|---|---|---|
| ITEM NO. | NO. REQ'D | SECTION | DESCRIPTION | LENGTH FT. | LENGTH IN. | MATERIAL | CODE NO. OR DWG. NO. | REMARKS |

| BASIC PARTS | | | |
|---|---|---|---|
| NO. REQ'D | DWG. NO | DESCRIPTION | REMARKS |
| 16 | 12913 | THRUST WASHER | |
| 2 | 15560 | 1½-12 UNF-2A HEX. HD BOLT-6½ LG | |
| 2 | 17111 | 1½-12 UNF-2A HEX. HD BOLT-13¾ LG | |
| 2 | 22656 | BOOM SIGN | |
| 2 | 15275 | KEEPER PLATE | |
| | | | |
| 1 | 65590 | 40 FT BOOM BUTT | |
| 1 | 65600 | 40 FT BOOM TOP | |
| (P) 1 | 162441 | GANTRY ASSEMBLY | |
| 4 | 75406 | SHAFT ANCHOR | |
| (Q) 10 | 81014333 | BUSHING | |
| | | | |
| (R) 10 | 81014334 | SHEAVE 24.00 DIA - 1.125 W.R. | |
| 1 | 96451 | WIRE ROPE GUIDE ASSEMBLY | |
| 2 | 96556 | SHAFT | |
| (F) 4 | 136313 | END PLATE | |
| AS REQ'D | 140977 | WASHER | |
| AS REQ'D | 141463 | WASHER | |
| 4 | 144445 | LINK | |
| 2 | 144446 | LINK | |
| 2 | 144511 | BUSHING | |
| 2 | 144550 | PIN | |
| (N) 2 | 164394 | PIN | |
| 2 | 144698 | PIN | |
| 2 | 144699 | LINK | |
| (E) 4 | 146602 | PIN | |
| 2 | 144715 | BEARING BLOCK | |
| 2 | 144721 | WASHER | |
| 2 | 144729 | SUPPORT | |
| | | | |
| 1 | 183124 | BOOM POINT SHEAVE CARRIER ASSEMBLY | |
| (K) 1 | 164007 | MAST | |
| (L) 2 | 219739 | BAR | |
| 2 | 219666 | ½ X ½ X 4 BAR | |
| 4 | 548374 | 1½-12 UNF-2B ELASTIC STOP NUT | |
| 4 | 709550 | 1½ FLAT WASHER | |
| | | | |
| (J)(G) 1 | 161254 | MAST SUPPORT ASSEMBLY | |

ASSEMBLIES USED ON

REVISIONS

- 3-27-78 R.A.D. (A) LENGTH CORRECTED
- 7-11-78 R.A.D. (B) ADDED REV PRIOR TO MFG
- 10-10-79 CRP (C) WAS #144712
- 11-7-79 J.B. (D) WAS #146554
- 1-28-80 JN (E) WAS 144701 (F) ADDED
- 4-22-81 S.P.S (G)(H) ADDED
- 9-17-82 CRP (J) WAS 96563
- 8-6-84 CRP (K) WAS 190493
- 10-11-84 JHS (L)(M) ADDED (N) WAS 144697
- 12-14-84 SPS (P) WAS 65620
- 01-13-11 JAS (Q) WAS 76605 (R) WAS 94573

DWG. NO. 656626

REFERENCE ONLY!

| | | | |
|---|---|---|---|
| SCALE 1/8, 1"=1'0" | MANITOWOC ENGINEERING CO. MANITOWOC, WISCONSIN | | DATE 6-21-77 |
| DR. S.P.S | | BOOM RIGGING ASSEMBLY #62 BOOM | PATTERN NO. |
| CK. | MODEL 6400 | | CODE NO. |
| APP. | | | DWG. NO. 656626 |

DESIGN PRODUCTS CO. 21-31-01 250-9-77
DO NOT SCALE THIS DRAWING