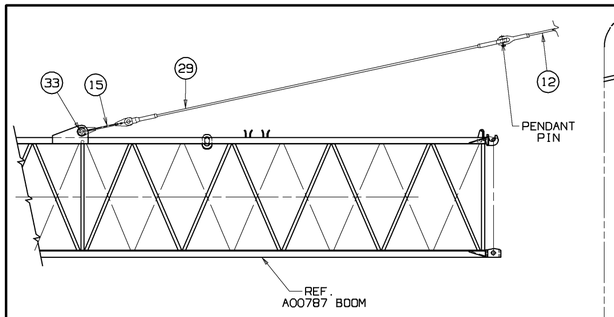

15° JIB ANGLE

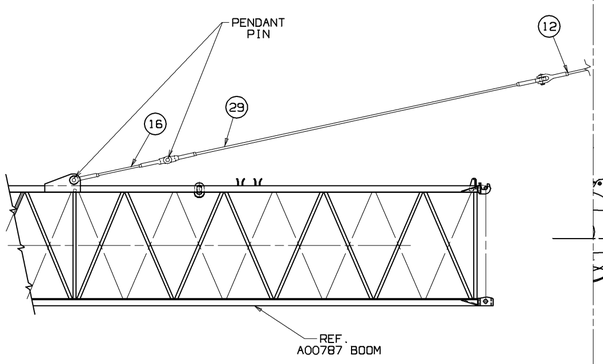

25° JIB ANGLE

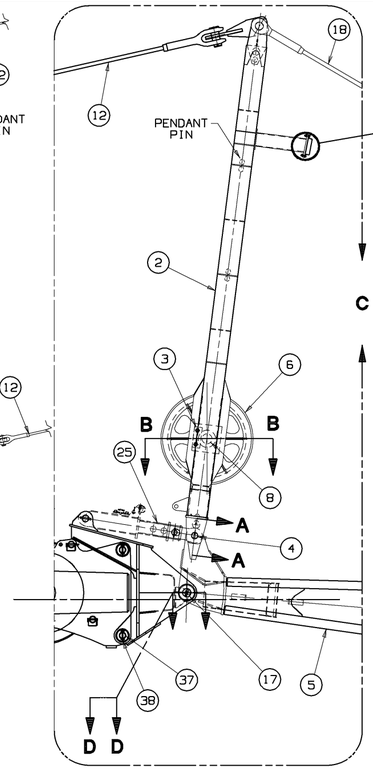

VIEW C

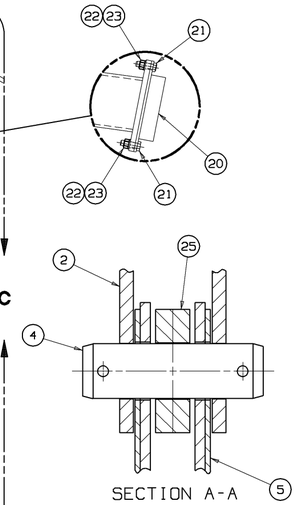

SECTION A-A

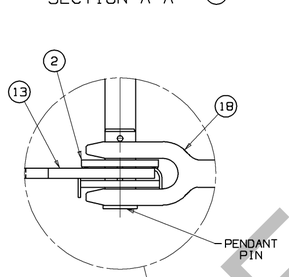

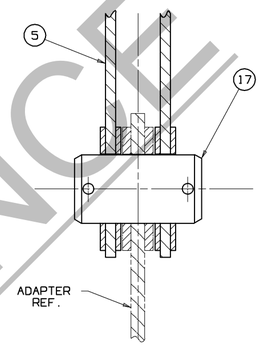

SECTION D-D

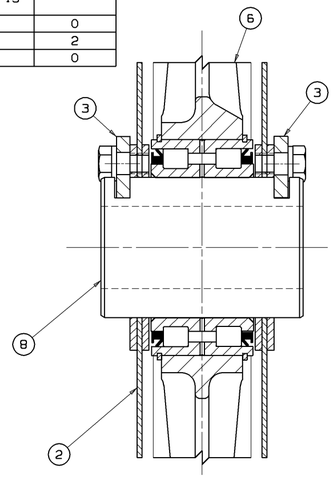

SECTION B-B

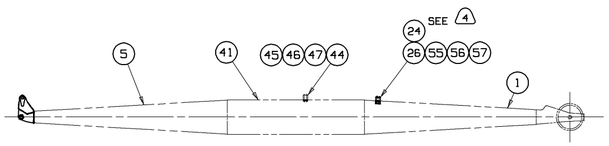

VIEW OF 40 FT JIB

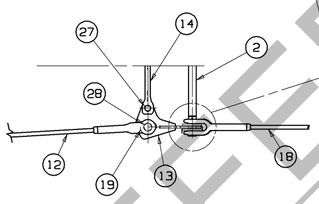

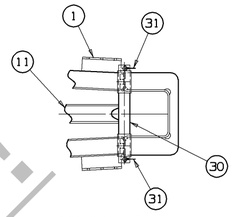

VIEW E-E
SCALE: 1.50=1FT

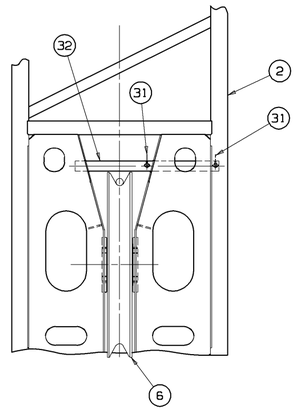

VIEW F-F
SCALE: 1.50=1FT

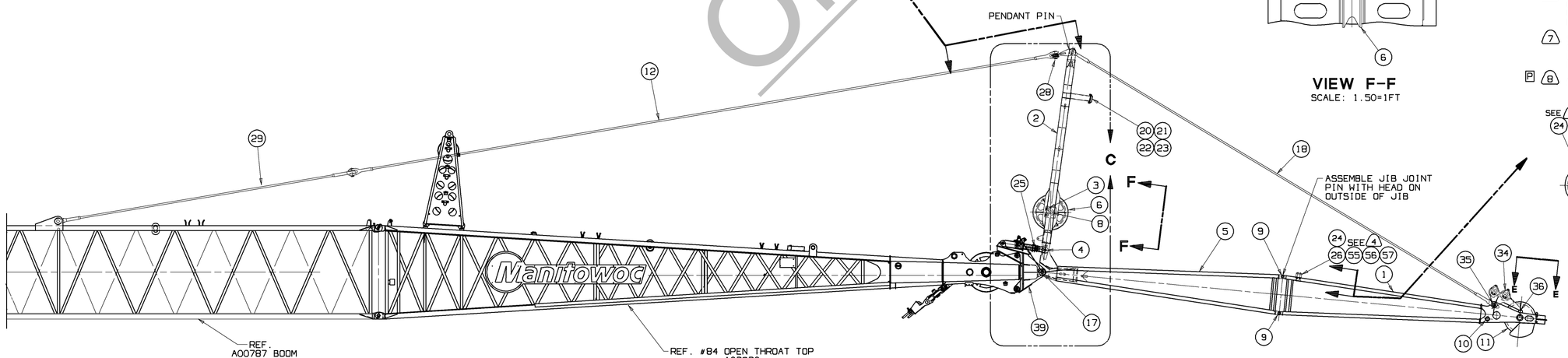

30 FT. (9.15M) JIB WITH
5° JIB ANGLE SHOWN

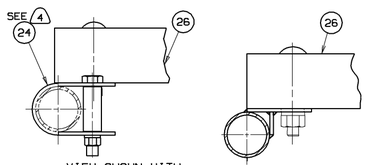

VIEW SHOWN WITH CLAMP (ITEM 24)
SEE 4

REQUIRED FOR VARIOUS JIB LENGHTS 5

DESCRIPTION

JIB LENGTH FEET	JIB LENGTH METERS		INSERT 10 FT-00 (3.05 M) ITEM 41	INSERT 20 FT-00 (6.10 M) ITEM 48	PENDANT 9 FT-6.00 (2.89 M) ITEM 42	PENDANT 19 FT-00 (5.79 M) ITEM 49	PIN JIB JOINT ITEM 43 OR 50	TIMBER ITEM 44 OR 51
40	12.19		1	0	2	0	4	1
50	15.24		2	0	4	0	8	2
		OR	0	1	0	2	4	
60	18.29		1	1	2	2	8	3
		OR	3	0	6	0	12	
70	21.33		0	2	0	4	8	4
		OR	2	1	4	2	12	
80	24.38		1	2	2	4	12	5
		OR	3	1	6	2	16	

REQUIRED FOR VARIOUS JIB ANGLES

DESCRIPTION

JIB ANGLE	PENDANT 44 FT-7.00 (15.59) M ITEM 12	PENDANT 18 FT-8.00 (5.69 M) ITEM 29	PENDANT 4 FT-8.00 (1.42 M) ITEM 16	LINK 28.00 (711 mm) ITEM 15	PIN ITEM 33
5°	2	2	0	0	0
15°	2	2	0	2	2
25°	2	2	2	0	0

BILL OF MATERIAL

ITEM NO.	NO. REQD.	REC-TION	DESCRIPTION	LENGTH IN	MATERIAL	CODE NO. OR DWG. NO.	△
			FIXED JIB ASSEMBLY #134				
1	1		JIB TOP 15 FT-0 (4.57 m)			A01810	6
2	1		STRUT 12 FT-6 (3.81 m)			A01797	7
3	2		KEEPER			169810	
4	2		PIN			170851	
5	1		JIB BUTT 15 FT-0 (4.57m)			177054	
6	1		SHEAVE ASSEMBLY			176799	
7							
8	1		PIN			177219	
9	4		PIN			76225	
10	1		UNIVERSAL WIRE ROPE ANCHOR JOINT			90317	
11	1		JIB POINT SHAFT ASSEMBLY			90318	
12	2		PENDANT 44 FT-7 (13.59m)			277432	2
13	2		LINK			177295	
14	1		LINK			177296	
15	2		LINK 28-0 IN. (711mm)			177298	
16	2		PENDANT 4 FT-8.00 (1.42m)			277431	1
17	2		PIN HINGE			177397	
18	2		PENDANT 30 FT-9.00			277430	1
19	4		SPACER			196278	
20	2		RUBBER BUMPER			285220	
21	4		SCR. HEX..375-16 UNC-2A X 1.25 LG. GR.5			612456	
22	4		NUT HEX .375-16 UNC-2B			546054	
23	4		WASHER, LOCK .375Ø			710304	
24	2		CLAMP			177473	4
25	1		JIB STOP ASSY			179332	
26	1	B	TIMBER 27.00 LG X 3.50 W			81017676	8
27	2		PIN			177301	
28	2		PIN			177303	
29	2		PENDANT 18 FT-8 (5.69m)			A06408	3
30	1		WIRE ROPE GUARD			A02370	
31	4		PIN, SNAP			563823	
32	1		GUARD WIRE ROPE			A02066	
33	2		PIN			177302	
34	1		INDICATOR LOAD SENSOR			179353	
35	1		PIN			179352	
36	2		WASHER, FLAT			709460	
37	4		PIN COTTER 1 HOLE W/HEAD			A05838	
38	4		PIN SNAP .38 X 2.25			563803	
39	1		ADAPTER FRAME MACHINING			A05255	
55	4	RE	HHCS 5/8-11UNC X 5.00 GR 5			612685	
56	4	F	HEX LOCK NUT 5/8-11UNC Gr5.2			7660201601	
57	8	G	WASHER FLAT .625			709747	
			10 FT INSERT (3.04m)				
41	1		INSERT- 10 FT-0 (3.05m)			32938	
42	2		PENDANT 9 FT-0 (2.89m)			276729	1
43	4		PIN- JIB JOINT			76225	
44	1	D	TIMBER 27.00 LG X 3.50 W			81017676	8
45	4	TH	HHCS 5/8-11UNC X 5.00 GR 5			612685	
46	4	J	HEX LOCK NUT 5/8-11UNC Gr5.2			7660201601	
47	8	K	WASHER FLAT .625			709747	
			20 FT INSERT (6.09m)				
48	1		INSERT- 20 FT-0 (6.09m)			176938	
49	2		PENDANT 19 FT-0 (5.79m)			277422	1
50	4		PIN- JIB JOINT			76225	
51	2	C	TIMBER 27.00 LG X 3.50 W			81017676	8
52	4	VL	HHCS 5/8-11UNC X 5.00 GR 5			612685	
53	4	M	HEX LOCK NUT 5/8-11UNC Gr5.2			7660201601	
54	8	N	WASHER FLAT .625			709747	

ASSEMBLIES USED ON

REVISIONS
06-12-10 JAS
A UPDATED BOOM SIGN
09-23-11 RDA
B WAS 177221
C D WAS 192028
E F G H J K L M N ADDED
P ADDED NOTE
10-18-11 RDA
R T V WAS 7115204050

1. ON DWG. A02422
2. ON DWG. A02308
3. ON DWG. A02421
4. REQ'D. FOR JIB TOPS NOT EQUIPPED WITH TIMBER MOUNTING BRACKETS.(MAY BE REQUIRED ON TOP 32948)
5. INSERTS AND CORRESPONDING PENDANTS MUST BE INSTALLED IN ORDER OF ASCENDING LENGTH STARTING AT JIB BUTT.
6. TOP 32948 CAN BE USED IN PLACE OF TOP A01810. GUARD WIRE ROPE A02370 AND PIN SNAP 563823. USE OF 32948 REQUIRES THAT THE WEDGE SOCKET BE REMOVED FROM THE LOAD LINE TO REEVE.
7. STRUT 177131 CAN BE USED IN PLACE OF STRUT A01797. GUARD WIRE ROPE A02066 AND PIN SNAP 563823. USE OF 177131 REQUIRES THAT THE WEDGE SOCKET BE REMOVED FROM THE LOADLINE TO REEVE.
8. P ATTACH TIMBERS SO THEY ARE FREE TO SLIDE UNDER THERMAL EXPANSION/CONTRACTION OF PLASTIC

DWG. NO. A05262

PRIVATE LABELING REQUIREMENT TO CONFORM TO ENGINEERING SPECIFICATION 6829103794 FOR COMPONENTS LISTED IN G05500-05-035

DATE 12-26-02

PATTERN NO.

REFERENCE ONLY!

THIS PRINT REMAINS THE PROPERTY OF MANITOWOC CRANES, INC. ALL INFORMATION CONTAINED THEREIN IS CONFIDENTIAL. IT IS LOANED, SUBJECT TO RETURN UPON DEMAND, AND ON EXPRESS CONDITION THAT IT IS NOT TO BE COPIED OR USED DIRECTLY OR INDIRECTLY IN ANY WAY WHATSOEVER DETRIMENTAL TO OUR INTERESTS.

TOLERANCE UNLESS OTHERWISE SPECIFIED			
DECIMAL PLACES	FABRICATION < 10 FEET	FABRICATION > 10 FEET	MACHINING
(1) PLACE 0.0	±.12	±.19	±.03
(2) PLACE 0.00	±.06	±.12	±.015
(3) PLACE 0.000			±.005
ANGLES	±1°30'		±0°30'

MACHINING TOLERANCE APPLIES TO THE FINISHED SURFACE

SCALE .38=1FT
DR. ER
CK. TSC
APP. TSC

Manitowoc Cranes, Inc.
Manitowoc, Wisconsin
MODEL 555

JIB ASSEMBLY
#134 JIB
FOR OTT BOOM

DWG. NO. A05262

DO NOT SCALE THIS DRAWING