DWG.NO.	(21) 911700	(22) 911701	(23) 911698	(24) 911699	(25) 910836	(26) 910837	(27) 276737 DWG.#75002	(28) 276738 DWG.#75002	(29) 276810 DWG.#75002
BOOM LENGTH	10FT. INSERT (W222HD)	10FT. INSERT WITH JIB BACKSTAY (HD) (SEE INSERT NOTES) (9)	20FT. INSERT (W222HD)	20FT. INSERT WITH JIB BACKSTAY (HD)	40FT. INSERT (W222)	40FT. INSERT WITH JIB BACKSTAY (W222)	PENDANT 10 FT.	PENDANT 20 FT.	PENDANT 40 FT.
50 FT.	(1) REQUIRED						10 FT. OF PENDANT SETS		
60 FT.	(2) REQUIRED						20 FT. OF PENDANT SETS		
70 FT.	(1) REQUIRED		(1) REQUIRED				30 FT. OF PENDANT SETS		
80 FT.	(2) REQUIRED		(1) REQUIRED				40 FT. OF PENDANT SETS		
90 FT.	(1) REQUIRED		(2) REQUIRED				50 FT. OF PENDANT SETS		
100 FT.	OR (2) REQUIRED / (0) REQUIRED	— — —	(0) REQUIRED / (1) REQUIRED	— — —	(1) REQUIRED / (1) REQUIRED	— — —	60 FT. OF PENDANT SETS		
110 FT.	(1) REQUIRED		(1) REQUIRED		(1) REQUIRED	(1) OPTIONAL	70 FT. OF PENDANT SETS		
120 FT.	(2) REQUIRED		(1) REQUIRED		(1) REQUIRED	(1) OPTIONAL	80 FT. OF PENDANT SETS		
130 FT.	(1) REQUIRED		(2) REQUIRED		(1) REQUIRED	(1) OPTIONAL	90 FT. OF PENDANT SETS		
140 FT.	OR (2) REQUIRED / (0) REQUIRED	— — —	(0) REQUIRED / (1) REQUIRED	— — —	(2) REQUIRED / (2) REQUIRED	(1) OPTIONAL	100 FT. OF PENDANT SETS		
150 FT.	(1) REQUIRED		(1) REQUIRED		(2) REQUIRED	(1) OPTIONAL	110 FT. OF PENDANT SETS		
160 FT.	(2) REQUIRED		(1) REQUIRED		(2) REQUIRED	(1) OPTIONAL	120 FT. OF PENDANT SETS		
170 FT.	(1) REQUIRED		(2) REQUIRED		(2) REQUIRED	(1) OPTIONAL	130 FT. OF PENDANT SETS		
180 FT.	OR (2) REQUIRED / (0) REQUIRED	— — —	(0) REQUIRED / (1) REQUIRED	— — —	(3) REQUIRED / (3) REQUIRED	(1) OPTIONAL	140 FT. OF PENDANT SETS		
190 FT.	(1) REQUIRED		(1) REQUIRED		(3) REQUIRED	(1) OPTIONAL	150 FT. OF PENDANT SETS		
200 FT.	(2) REQUIRED		(1) REQUIRED		(3) REQUIRED	(1) OPTIONAL	160 FT. OF PENDANT SETS		

BOOM HANDLING INSTRUCTIONS

TRAVEL SPEED NOT TO EXCEED 1/2 MPH WITH BOOM ANGLE AT 10° OR LESS

ATTACHMENT ARRANGEMENT	GANTRY POSITION	MAX. LENGTH OF BOOM HANDLED	BOOM MAKE UP	BOOM CONDITIONS OR LIMITATIONS	SWING ALLOWED: CRAWLERS RETRACTED CTWTS INSTALLED	SWING ALLOWED: CRAWLERS EXTENDED CTWTS INSTALLED
EQUALIZER PINNED TO LUGS ON BOOM BUTT	UP	59 FT.	BUTT & INSERTS ONLY	CAN CANTILEVER 40 FT. OF INSERTS.	NO*	YES
	DOWN	59 FT.	BUTT & INSERTS ONLY	CAN CANTILEVER 40 FT. OF INSERTS.	NO*	YES
PENDANTS ATTACHED TO BOOM TOP	DOWN	80 FT WITHOUT JIB	BUTT, INSERTS & TOP	LOAD BLOCK, HOOK AND WEIGHT BALL MAY BE SUSPENDED BELOW BOOM POINTS	NO*	YES
		70 FT WITHOUT JIB			NO*	YES

* MACHINE MUST BE FACING FRONT OR REAR (SWING NOT ALLOWED)

BILL OF MATERIAL

ITEM NO.	NO. REQD.	SEC-TION	DESCRIPTION	LENGTH IN.	MATERIAL	CODE NO. OR DWG. NO.	
1	4		WASHER			12535	7
2	2		PIN			74079	
3	1		EQUALIZER ASSEMBLY			912004	
4	2		PENDANT (DWG. 73025)			276938	3
5	2		BASIC PENDANT (21 FT 0" DWG. 75002)			277214	1
6	6		SNAP PIN			563823	6
7	1		BOOM TOP ASSY (W222)			911207	
8	1		BOOM BUTT ASSY (W222HD)			911715	
9	1		BOOM STOP ASSY (W222HD)			912639	
10	1		GANTRY ASSEMBLY			911164	
11	1		WIRE ROPE TIMBER GUARD ASSY			168494	
12	2		PENDANT			277512	
21	AR		10 FT INSERT (W222HD)			911700	9
22	AR		10 FT INSERT WITH JIB BACKSTAY (W222HD)			911701	9
23	AR		20 FT INSERT (W222HD)			911698	9
24	AR		20 FT INSERT WITH JIB BACKSTAY (W222HD)			911699	9
25	AR		40 FT INSERT (W222)			910836	9
26	AR		40 FT INSERT WITH JIB BACKSTAY (W222)			910837	9
27	AR		10 FT PENDANT			276737	9
28	AR		20 FT PENDANT			276738	9
29	AR		40 FT PENDANT			276810	9
40	AR		WIRE ROPE ROLLER GUIDE ASSY			164766	
41	1		UNIV. WIRE ROPE ANCHOR JOINT ASSY			166936	4
42	1		UPPER BOOM POINT ASSEMBLY			911103	2
43	1		LWR BOOM PT. SFT. ASSY (PILE DRVG)			911108	
44	1		LWR. BOOM PT. SFT. & ROPE GUARD ASSY (CLAM ROLLERS)			913015	

ASSEMBLIES USED ON

REVISIONS

9-6-01 DW
A CORRECTED INSERT QUANTITIES
09-27-01 BB
B QTY WAS 4
C ADDED ITEM 12 W/ DELTA NOTE
D ADDED ITEM 44
08-05-03 TMO
E ADDED

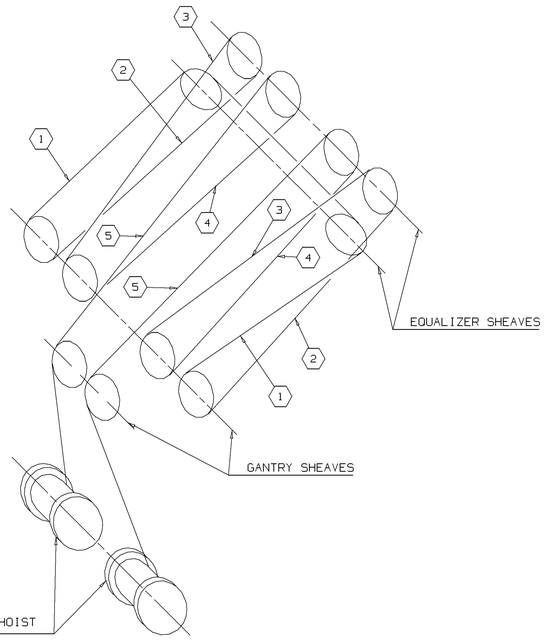

BOOM HOIST REEVING DIAGRAM FOR 10 PART LINE.

430 FEET OF .625 -6 X 26 WARRINGTON SEALE, EXTRA IMPROVED PLOW STEEL, ALTERNATE LAY, I.W.R.C. (719343) - B.S. 41,200 LBS.

OR

ALTERNATE WIRE ROPE

430 FEET OF .625 - 6 X 26 WARRINGTON SEALE, EXTRA IMPROVED PLOW STEEL, REGULAR LAY, I.W.R.C. (719344) - B.S. 41,200 LBS.

OR

430 FEET OF .625 - DYFORM-6, (719345) - B.S. 45,400 LBS.

OR

430 FEET OF .625 - CONSTRUCTEX (A00121) - B.S. 51.000 LBS. RIGHT HAND REGULAR LAY

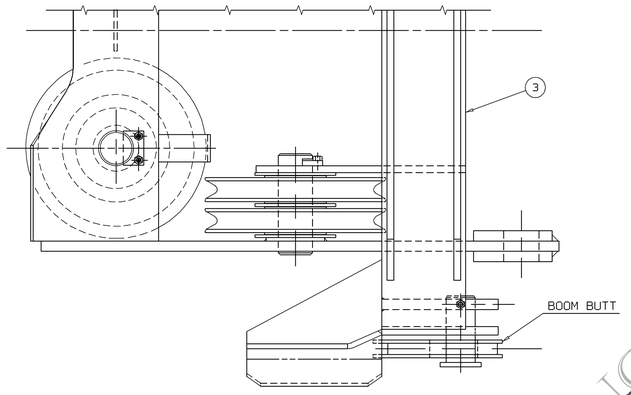

VIEW OF EQUALIZER PINNED TO BOOM BUTT

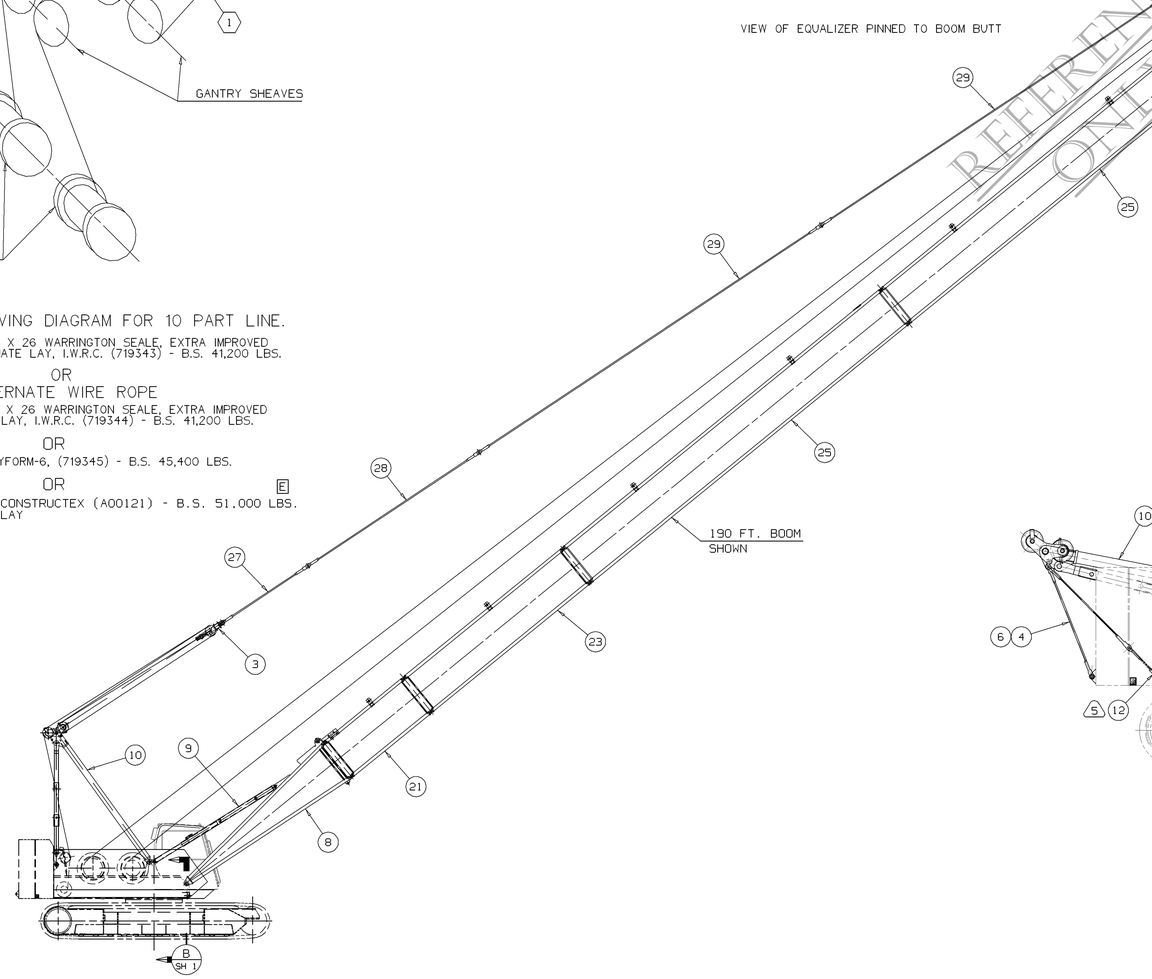

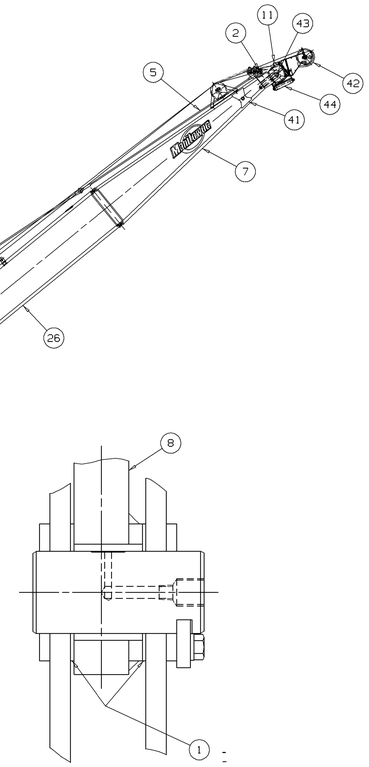

SECTION B
SCALE 1/2 SH 1

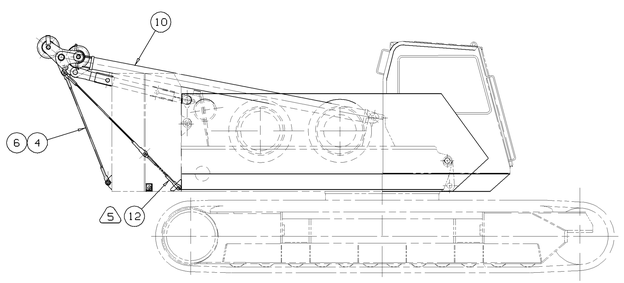

VIEW C
SCALE 1/32 SH 1

(STANDARD COUNTERWEIGHTS)

(1) ON DWG. 75002

(2) .875 WIRE ROPE.

(3) REQ'D FOR BOOM HANDLING. SEE VIEW "A" & "C". THIS PENDANT IS ALSO USED FOR CTWT. HANDLING & RAISING THE GANTRY WITH 40 FT. BASIC BOOM.

(4) THE WIRE ROPE ANCHOR JOINT ASSY. MUST BE REMOVED WHEN USING MULTIPLE PARTS OF LINE.

(5) SEE VIEW "C". REQUIRED FOR GANTRY TIE-DOWN W/O COUNTERWEIGHTS INSTALLED.

(6) USED TO REPLACE PENDANT PIN COTTER PIN FOR PENDANT 276938.

(7) QUANTITY AS REQUIRED.

(8) WEIGHT FOR 2 SHV WIRE ROPE GUIDE ASS'Y.

(9) INSERT NOTES:

1- MAXIMUM NUMBER OF 10 FT. INSERTS = 2.

2- MAXIMUM NUMBER OF 20 FT. INSERTS = 2.

3- COMBINATION OF 10 FT. AND 20 FT. INSERTS CANNOT EXCEED 2-10 FT. + 1-20 FT. OR 1-10 FT. + 2-20 FT.

4- THE SHORTER INSERTS MUST BE CLOSEST TO THE BUTT. (10 FT. INSERTS FIRST, THEN THE 20 FT. INSERTS)

PENDANT NOTES:

1- PENDANT SETS DO NOT INCLUDE BASIC PENDANTS 277214.

2- PENDANTS FURNISHED IN SETS OF TWO.

3- MATCH LENGTHS OF PENDANT SETS TO LENGTHS OF INSERTS FURNISHED.

GENERAL NOTES:

1- MINIMUM BOOM LENGTH REQUIRED FOR JIB = 70 FT.

2- WHEN AUX. DRUM 911206 OR 911175 IS USED, REFER TO RIGGING ASSY. 911172 FOR ADDITIONAL PARTS.

3- BOOM SECTIONS WITH JIB BACKSTAY LUGS MAY BE FREELY SUBSTITUTED FOR SECTIONS WITHOUT JIB BACKSTAY LUGS.

RIGGING AND HANDLING NOTE

WITH THE GANTRY DOWN AND THE BOOM BUTT ONLY ATTACHED TO THE MACHINE, THE BRAKE GUARD(S) WILL BE DAMAGED IF THE BUTT SECTION CENTER LINE IS NOT HORIZONTAL OR ABOVE.

REFERENCE ONLY

THIS PRINT REMAINS THE PROPERTY OF MANITOWOC CRANES, INC. ALL INFORMATION CONTAINED THEREON IS CONFIDENTIAL. IT IS LOANED, SUBJECT TO RETURN UPON DEMAND, AND ON EXPRESS CONDITION THAT IT IS NOT TO BE COPIED OR USED DIRECTLY OR INDIRECTLY IN ANY WAY WHATSOEVER DETRIMENTAL TO OUR INTERESTS.

TOLERANCE UNLESS OTHERWISE SPECIFIED	DECIMAL PLACES	FABRICATION ≤ 10 FEET	FABRICATION > 10 FEET	MACHINING
	(1) PLACE 0.0	±.12	±.18	±.03
	(2) PLACE 0.00	±.06	±.12	±.015
	(3) PLACE 0.000			±.005
	ANGLES	±1°30'		±0°30'

MACHINING TOLERANCE APPLIES TO DATA DIMENSION ON MACHINED SURFACE

SCALE 3/16"=1 FT
DR. SLD
CK. SLD
APP SLD

Manitowoc Cranes, Inc.
Manitowoc, Wisconsin

MODEL

BOOM RIGGING ASSEMBLY.
222HD BOOM, 222TOP
1.25 SWAGED PENDANTS

DWG. NO. 913235

DATE 10-13-98

PATTERN NO.

DWG. NO. 913235

DO NOT SCALE THIS DRAWING