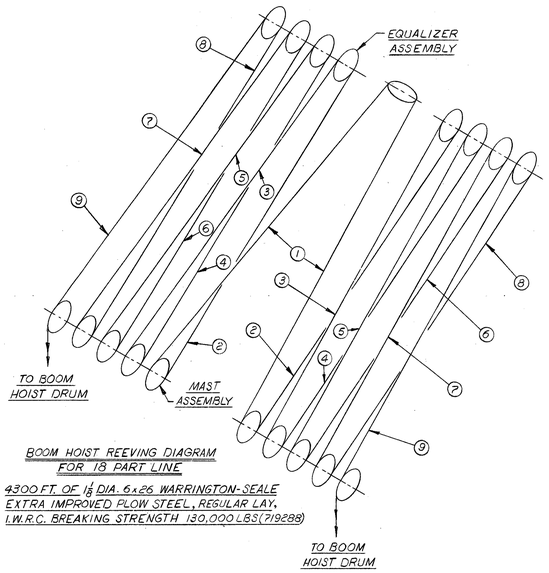


BOOM HOIST REEVING DIAGRAM FOR 18 PART LINE

4300 FT. OF 1 1/8 DIA. 6x26 WARRINGTON-SEALE EXTRA IMPROVED PLOW STEEL, REGULAR LAY, I.W.R.C. BREAKING STRENGTH 130,000 LBS (719288)

183350-2 PLAIN INSERT
183350-9 WITH J18 BACKSTAY LUGS
190610-2 PLAIN INSERT
190610-9 WITH J18 BACKSTAY LUGS
A17180-2 PLAIN INSERT
A17180-9 WITH J18 BACKSTAY LUGS

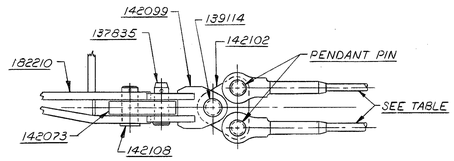


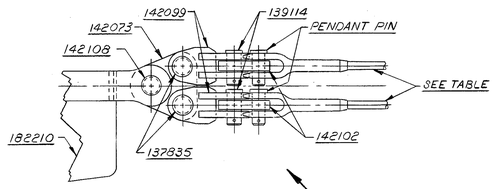


RECOMMENDED FOR VARIOUS BOOM LENGTHS

| DWG. NO. | 183350-2 183350-9 (P)81013333 | (N) A17180-2 A17180-9 190610-2 190610-9 | 276861 DWG. 76280 | 276862 DWG. 76280 | 276863 DWG. 76280 | 96855 | 183406 SEE GEN. NOTE 1 | 144712 |
|---|---|---|---|---|---|---|---|---|
| BOOM LENGTH | 20 FT. INSERT | 40 FT. INSERT | PENDANT (G) 10 FT. | PENDANT 20 FT. | PENDANT 40 FT. | WIRE ROPE GUIDE | EQUALIZER PLATFORM | WIRE ROPE ROLLER GUIDE |
| 140 BASIC | 40 FT. OF INSERTS | | 0 FT. OF PEND. SETS | | | 0 | 0 | 3 |
| 160 | 60 FT. OF INSERTS | | 20 FT. OF PEND. SETS | | | 1 | 1 | 4 |
| 180 | 80 FT. OF INSERTS | | 20 FT. OF PEND. SETS | | | 1 | 1 | 5 |
| 200 | 100 FT. OF INSERTS | | 40 FT. OF PEND. SETS | | | 1 | 1 | 6 |
| 220 | 120 FT. OF INSERTS | | 60 FT. OF PEND. SETS | | | 1 | 1 | 7 |
| 240 | 140 FT. OF INSERTS | | 80 FT. OF PEND. SETS | | | 1 | 1 | 8 |
| 260 | 160 FT. OF INSERTS | | 100 FT. OF PEND. SETS | | | 1 | 1 | 9 |
| 280 | 180 FT. OF INSERTS | | 110 FT. OF PEND. SETS | | | 1 | 1 | 10 |
| 300 | 200 FT. OF INSERTS | | 130 FT. OF PEND. SETS | | | 1 | 1 | 11 |
| 320 | 220 FT. OF INSERTS | | 150 FT. OF PEND. SETS | | | 1 | 1 | 12 |
| 340 | 240 FT. OF INSERTS | | 170 FT. OF PEND. SETS | | | 1 | 1 | 13 |
| 360 | 260 FT. OF INSERTS | | 190 FT. OF PEND. SETS | | | 1 | 1 | 14 |
| 380 | 280 FT. OF INSERTS | | 210 FT. OF PEND. SETS | | | 1 | 1 | 15 |
| 400 | 300 FT. OF INSERTS | | 230 FT. OF PEND. SETS | | | 1 | 1 | 16 |

PENDANT NOTES

1. "PENDANT SETS" DO NOT INCLUDE BASIC PENDANTS # 276978
2. PENDANTS FURNISHED IN SETS OF EIGHT.
3. MAXIMUM NUMBER OF 20 FT. PENDANTS = 16
4. (H) MAXIMUM NUMBER OF 10 FT. PENDANTS = 8

INSERT NOTES

1. MAXIMUM NUMBER OF 20 FT. INSERTS = 2
2. 20 FT. INSERTS TO BE LOCATED ADJACENT TO 50 FT. BUTT # 65238 OR A17185
3. SEE J18 ASSEMBLY FOR LOCATION OF INSERT WITH J18 BACKSTAY LUG.
4. (R) 81013333 MUST BE ADJACENT TO 50FT BUTT IF USED WITH ANOTHER 20FT INSERT

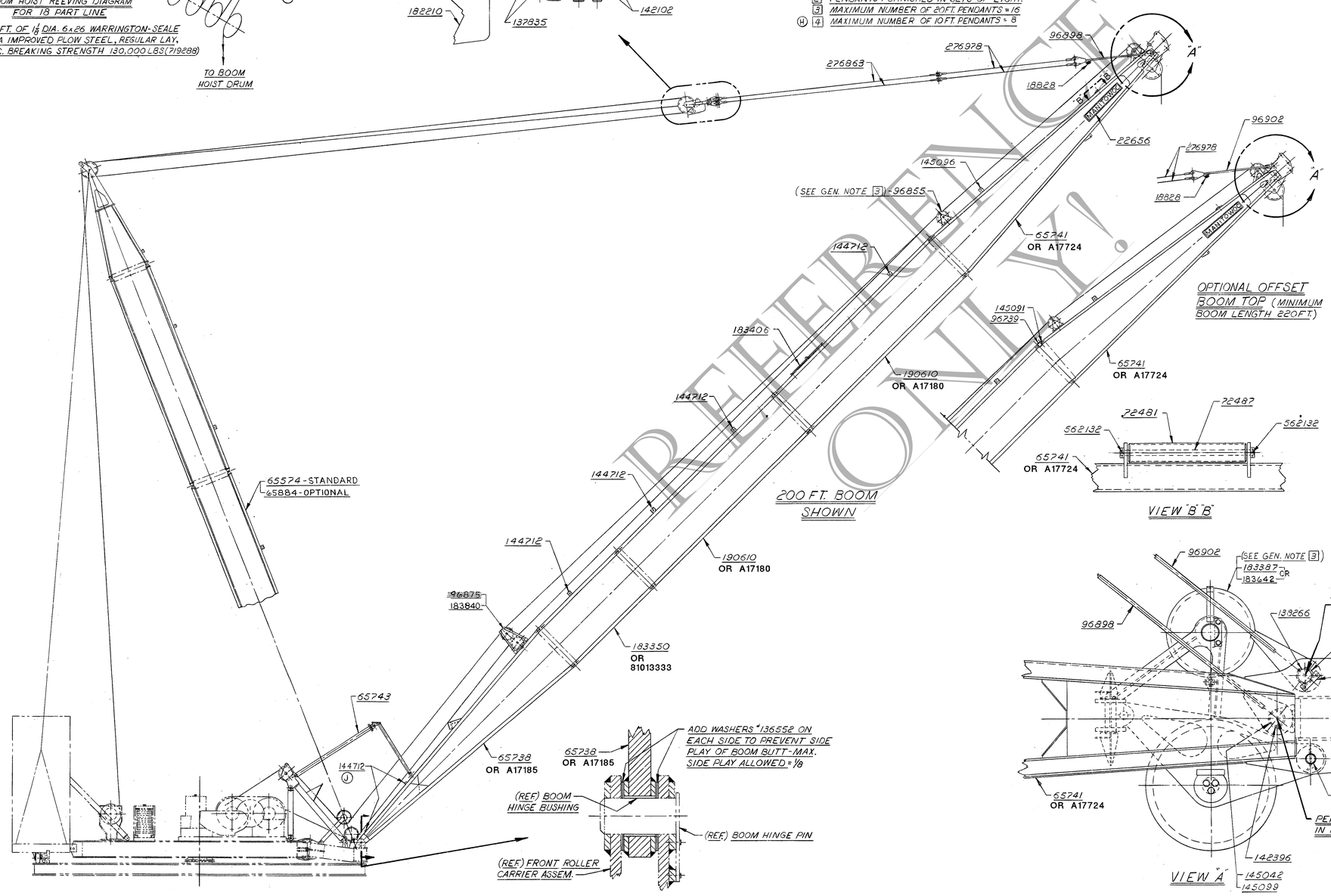


OPTIONAL OFFSET BOOM TOP (MINIMUM BOOM LENGTH 220 FT.)




VIEW "B"

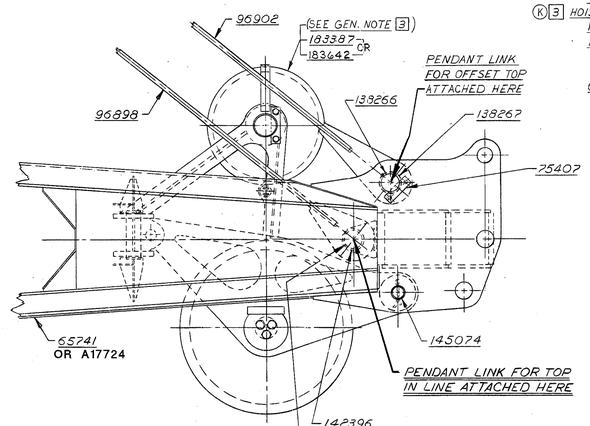


VIEW "A"

BILL OF MATERIAL

| ITEM NO. | NO. REQ'D | SEC. DESIGNATION | DESCRIPTION | LENGTH FT. | LENGTH IN. | MATERIAL | CODE NO. OR DWG. NO. | REMARKS |
|---|---|---|---|---|---|---|---|---|
| | | | BASIC PARTS | | | | | |
| | 2 | | 18828 RUBBER BUMPER | | | | | |
| | 2 | | 22656 BOOM SIGN | | | | | |
| | 1 | | 65574 MAST ASSEMBLY | | | | | |
| (L) | 1 | | A17185 BOOM ASSY #63 BOOM 50 FT. | | | | | |
| OR | 1 | | 65738 BOOM BUTT (50 FT) | | | | | |
| | 1 | | 65741 BOOM TOP (50 FT) | | | | | |
| (M) OR | 1 | | A17724 TOP WELDMENT #63 BOOM 50 FT. | | | | | |
| | 1 | | 65743 BOOM STOP ASSEMBLY | | | | | |
| | 1 | | 72481 ROLLER | | | | | |
| | 1 | | 72487 PIN | | | | | |
| | | | | | | | | |
| (C) | ~~1~~ | | ~~96875 WIRE ROPE GUIDE ASSEMBLY~~ | | | | | |
| | 2 | | 96898 PENDANT LINK | | | | | |
| | | | | | | | | |
| | AS REQ'D. | | 136552 WASHER | | | | | |
| | 4 | | 137835 PIN | | | | | |
| | 4 | | 139114 PIN | | | | | |
| | | | | | | | | |
| | 2 | | 142073 EQUALIZER LINK | | | | | |
| | 4 | | 142099 INTERMEDIATE LINK | | | | | |
| | 4 | | 142102 EQUALIZER LINK | | | | | |
| | | | | | | | | |
| | 2 | | 142108 PIN | | | | | |
| | 4 | | 142396 BUSHING | | | | | |
| | 2 | | 145042 PIN | | | | | |
| | 2 | | 145074 PIN | | | | | |
| | 1 | | 145096 WIRE ROPE ROLLER GUIDE ASSEMBLY | | | | | |
| | 2 | | 145099 KEEPER PLATE | | | | | |
| | 1 | | 182210 EQUALIZER ASSEMBLY | | | | | |
| | 1 | | 183387 BOOM POINT SHEAVE ASSEM. FOR 1 1/8" WIRE ROPE | | | | | SEE GEN. NOTE 2 |
| (D) OR | 1 | | 183642 BOOM POINT SHEAVE ASS'D FOR 1 1/8" WIRE ROPE | | | | | SEE GEN. NOTE 2 |
| (E) | 1 | | 183840 WIRE ROPE GUIDE ASS'D ADDED | | | | | |
| | | | | | | | | |
| | 8 | | 276978 BASIC PENDANT (25 FT. O) | | | | | DWG. 139353 |
| | | | | | | | | |
| | | | | | | | | |
| | 2 | | 562132 9/16 x 4 LG. COTTER PIN | | | | | |
| | | | | | | | | |
| | | | | | | | | |
| | | | OPTIONAL | | | | | |
| (A) | 1 | | 48875 10 FT. UPPER BOOM POINT ASSEMBLY | | | | | NOT SHOWN |
| (F) | 1 | | 65884 MAST ASSEM. (SELF-ERECTING) | | | | | |
| | | | | | | | | |
| | | | OPTIONAL PARTS FOR OFFSET BOOM TOP | | | | | |
| | 2 | | 18828 RUBBER BUMPER | | | | | |
| | 2 | | 75407 KEEPER PLATE | | | | | |
| | | | | | | | | |
| | 2 | | 96739 OFFSET LINK | | | | | |
| | 2 | | 96902 PENDANT LINK | | | | | |
| | | | | | | | | |
| | 2 | | 138266 PIN | | | | | |
| | 2 | | 138267 BUSHING | | | | | |
| (B) | 4 | | 145091 PIN | | | | | |

ASSEMBLIES USED ON

REVISIONS

1-4-78 CRP (4) ADDED
7-17-78 S.P.S. (B) NO. REQ'D CORRECTED
1-9-79 D.W.D. PENDANT SETS INCREASED 10 FT. ON 280 FT. THRU 400 FT. BOOMS D.P.
(C) DELETED
(D)(E)(F)(G)(H) ADDED
2-14-79 R.A.D. (J)(K) ADDED
07-02-07 TMO (L)(M) ADDED (N) ADDED A17180
07-30-10 BDR (P)(R) ADDED

GENERAL NOTES

1. PLATFORM ASSEMBLY IS DESIGNED SOLELY TO FACILITATE GREASING OF EQUALIZER SHEAVES. DO NOT APPLY TENSION TO BOOM HOIST LINE WHEN EQUALIZER IS PINNED TO PLATFORM.
2. TO INSTALL BOOM POINT SHEAVE CARRIER ASSEMBLY (SEE VIEW A). ENGAGE CARRIER IN SUPPORTS; RAISE CARRIER AND SLIDE TOWARD BOOM REAR UNTIL PIN HOLES ALIGN; INSTALL PINS #145074.
   TO REMOVE BOOM POINT SHEAVE CARRIER ASSEMBLY (SEE VIEW A). REMOVE PINS #145074; SLIDE CARRIER TO BOOM FRONT TO DISENGAGE; LOWER CARRIER FROM BOOM.
3. (K) HOIST & WHIP LINES TO BE REEVED AS FOLLOWS:
   RIGHT HAND SHEAVE - HOIST LEAD LINE
   LEFT HAND SHEAVE - HOIST LEAD LINE (BLOCK REEVED WITH 2 DRUMS) OR WHIP LINE (2 LINES OVER JIB OR UPPER POINT)
   CENTER SHEAVE - WHIP LINE

DWG. NO. 65742

| | | |
|---|---|---|
| SCALE 1/8" = 1 FT. | MANITOWOC ENGINEERING CO. MANITOWOC, WISCONSIN | |
| DR. CRP | | BOOM RIGGING ASSEMBLY |
| CK. | MODEL 60 FT. PLATFORM | #63 BOOM |
| APP. | RINGER | |

DATE 12-7-77
PATTERN NO.
CODE NO.
DWG. NO. 65742

REFERENCE ONLY!

DESIGN PRODUCTS CO. 21-31-01 250-3-77
DO NOT SCALE THIS DRAWING