TABLE "A"				
REQ'D FOR VARIOUS JIB LENGTHS				
DRAWING NUMBER		172679	277360 DWG. 77535	171477 WIRE ROPE TIMBER GUARD OPTIONAL
JIB LENGTH		20 FT INSERT (6.1m)	19 FT-2.00 PENDANT (5.8m)	
FEET	METERS			
60	18.3	1	2	1
80	24.4	2	4	2
100	30.5	3	6	3
120	36.6	4	8	4

TABLE "B"										
REQ'D FOR VARIOUS JIB OFFSETS HEAVY LIFT TOP										
DRAWING NUMBER	3 277362 DWG.77535	LINK		2 LINK	PIN	PIN	PIN	PIN	LINK
JIB OFFSET 4	7 FT-4.00 PENDANT (2.2m)	171857	171858	171794	171867	169849	75465	170844	171761
5°	0	2	2	2	4	4	2	2	2
15°	2	0	0	0	2	C 2	2	2	2
30°	2	0	0	2	2	4	2	2	2

TABLE "C"										
REQ'D FOR VARIOUS JIB OFFSETS LONG REACH TOP										
DRAWING NUMBER	3 277362 DWG.77535	LINK		276785 DWG.73026	PIN	PIN	PIN	STRUT	2 LINK
JIB OFFSET 4	7 FT-4.00 PENDANT (2.2m)	171857	171858	6 FT-0.00 PENDANT (1.8m)	171868	171867	169849	171850	171794
5°	0	2	2	2	4	2	2	1	0
15°	0	0	0	2	4	0	D 4	1	2
30°	2	0	0	2	4	0	2	1	0

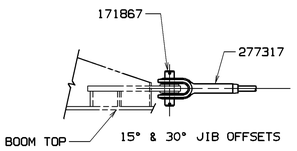

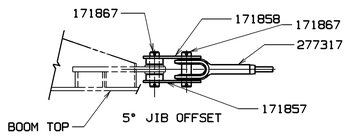

VIEW "E"-"E"

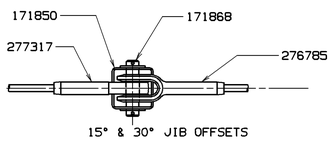

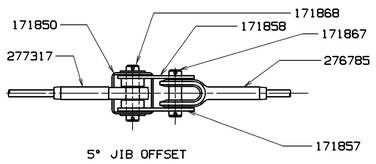

VIEW "F"-"F"

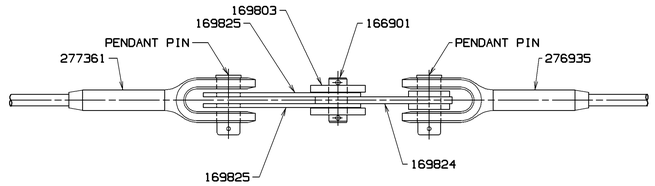

VIEW "C"-"C"

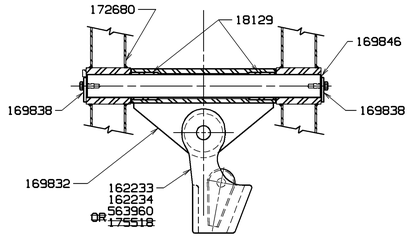

SECTION "D"-"D"

SEE 7

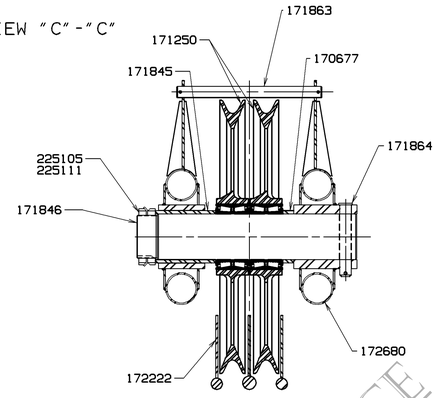

SECTION "A"-"A"

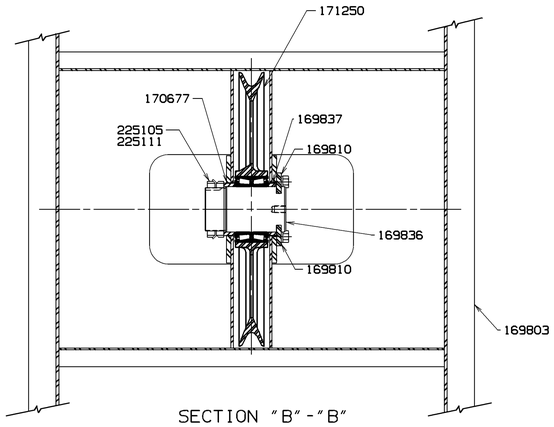

SECTION "B"-"B"

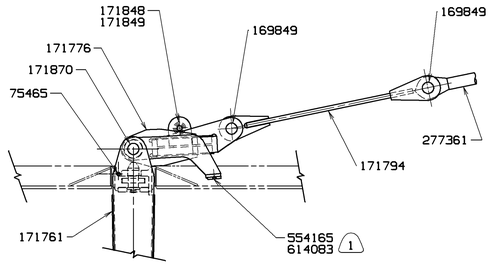

VIEW "G"

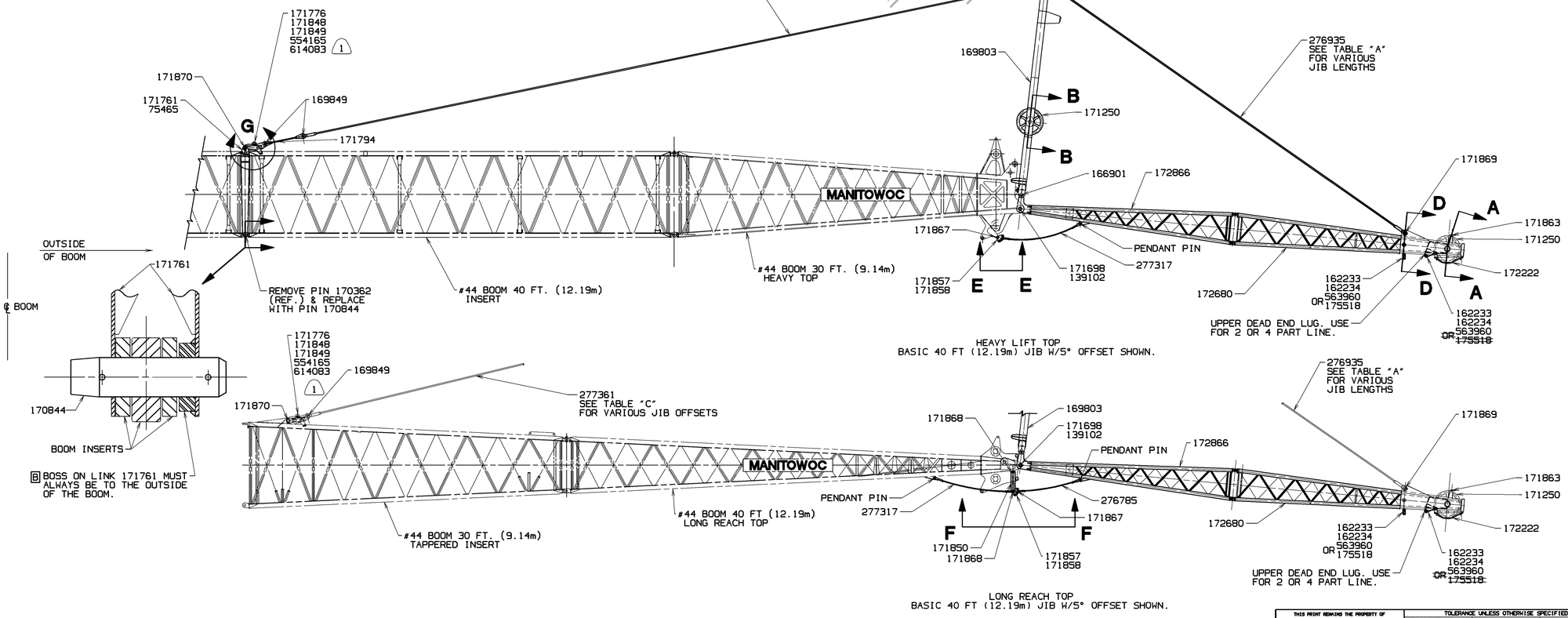

REFERENCE ONLY!

BILL OF MATERIAL

ITEM NO.	NO. REQ'D	SECTION	DESCRIPTION	LENGTH IN.	MATERIAL	CODE NO. OR DWG. NO	
	2		BUSHING			18129	
	2		PIN			139102	
	1		SOCKET			162233	
	1		WEDGE			162234	
	4		PIN			166901	
	1		JIB STRUT (20 FT)-(6.1m)			169803	
	2		PIN KEEPER			169810	
	2		LINK			169824	
	4		LINK			169825	
	1		DEAD END BAIL			169832	7
	1		PIN			169836	
	1		SPACER			169837	
	2		END PLATE			169838	
	1		PIN			169846	7
	2		SPACER			170677	
	3		SHEAVE ASSEMBLY			171250	
	2		BUSHING			171698	
	1		BACKSTAY SUPPORT			171776	
	1		SPACER			171845	
	1		SHAFT			171846	
	2		ROLLER			171848	
	1		SHAFT			171849	
	1		ROPE GUARD			171863	
	1		PIN			171864	
	2		PIN			171869	
	2		PIN			171870	
	1		ROPE GUARD			172222	
	1		JIB TOP (20 FT)-(6.1m)			172680	
	1		JIB BUTT (20 FT)-(6.1m)			172866	
	4		LOCKNUT			225105	
	2		LOCKWASHER			225111	
	2		JIB BASIC PENDANT (40 FT)-(12.19m)			276935	5
	2		PENDANT (7 FT. - 7.00)-(2.3m)			277317	6
	2		BACKSTAY BASIC PENDANT			277361	5
	2		PAD			554165	
	1		PIN			563960	
	2		.312-18UNC-2A X .50 LG (12.7 mm) FL AL HD CAPSCR			614083	1

ASSEMBLIES USED ON

REVISIONS

- 12-2-93 LS
- A ADDED
- 1-11-94 LS
- B ADDED
- C WAS 4 REQ'D
- D WAS 2 REQ'D
- 1-19-94 RAH
- E MULTIPLE PART REEVING ADDED.
- F MULTIPLE PART AND SINGLE PART REEVING ADDED
- 3-7-96 DH
- GH DELETED
- 5-6-98 CHP
- J ADDED

1. APPLY LOCTITE 242 OR EQUAVALENT TO SCREW 614083 AT ASSEMBLY.
2. LOCATE ADJACENT TO BACKSTAY SUPPORT 171776.
3. LOCATE BETWEEN BACKSTAY LINK 171794 OR BACKSTAY SUPPORT 171776 & PENDANT 277361
4. JIB OFFSETS ARE NOMINAL.
5. ON DWG. 77535-(69 FT.-9.00)-(21.3m) LG.
6. ON DWG. 73026
7. CAN BE USED FOR DEAD END WITH 2 PART LINE. MUST BE REMOVED WHEN 2,3, OR 4 PART LINE AND/OR UPPER DEAD END LUG IS USED.

E A	OPTIONAL-REQ'D. FOR MULTIPLE PART REEVING WITH 28 mm DYFORM 34LR (MEC CODE NO. 719367) OR 28 mm CASAR EUROLIFT (MEC CODE NO. 719368) WIRE ROPE.			
	ADD			
G	1	DEAD END LOCKING SWIVEL ASSEMBLY	175518	8
	DELETE			
	1	WEDGE SOCKET 1.125 WIRE ROPE	162233	
	1	WEDGE 1.125 WIRE ROPE	162234	
	1	PIN	563960	

HF ~~8 SEE ASSEMBLY DWG. FOR SWIVEL OPERATIONAL DIRECTIONS FOR MULTIPLE PART AND SINGLE PART REEVING.~~

J SUPERSEDED BY 192352

SUPERSEDES 172693 OF 4-24-92

DWG. NO. 172693

DATE 12-22-92

PATTERN NO.

THIS PRINT REMAINS THE PROPERTY OF MANITOWOC CRANES, INC. ALL INFORMATION CONTAINED THEREON IS CONFIDENTIAL. IT IS LOANED, SUBJECT TO RETURN UPON DEMAND, AND ON EXPRESS CONDITION THAT IT IS NOT TO BE COPIED OR USED DIRECTLY OR INDIRECTLY IN ANY WAY WHATSOEVER DETRIMENTAL TO OUR INTERESTS.

TOLERANCE UNLESS OTHERWISE SPECIFIED			
DECIMAL PLACES	FABRICATION ≤ 10 FEET	FABRICATION > 10 FEET	MACHINING
(1) PLACE 0.0	±.120	±.180	±.030
(2) PLACE 0.00	±.060	±.120	±.015
(3) PLACE 0.000			±.005
ANGLES	±1°30'		±0°30'

FOR MACHINING TOLERANCE ON THIS DRAWING REFER TO DIMENSION AND/OR SURFACE

SCALE 1/4=FT	Manitowoc Cranes, Inc.	JIB ASSEMBLY (USA)	
DR. DJS	Manitowoc, Wisconsin	#132 JIB	
CK. DJS	MODEL M-250	1.25 SWAGED PENDANTS	
APP TSC			DWG. NO. 172693

DO NOT SCALE THIS DRAWING