NATIONAL CRANE®

500E2 Series
Product Guide

ASME B30.5 • Imperial 85%

Features

- 16,3 t (18 USt) rating
- 21,6 m (71 ft) three-section full power boom
- Standard hydraulic capacity alert system
- Internal anti-two block

NATIONAL CRANE 500E2 SERIES

Features

The 500E2 stand-up boom truck is great for owner/operator businesses and rental fleets featuring a 16,3 t (18 USt) maximum capacity, 36,9 m (121 ft) maximum vertical reach, and 24,7 m (81 ft) maximum vertical hydraulic reach.

> Three-section boom

With a capacity of 16,3 t (18 USt) the Series 500E2 is equipped with a three-section 21,6 m (71 ft) boom. The long boom allows the operator to perform more lifts without the use of a jib, reducing setup time and improving efficiency.

> Innovative outrigger design

The Series 500E2 comes equipped "A" frame boxed slide outriggers with swivel pads and ASH type stabilizers. An optional single front outrigger is also available for 360° operation.

Front outriggers: 6,19 m (20.25 ft) span
Rear stabilizers: 3 m (10 ft) span

> NEW Electronic throttle and OMS system

New electronic pedals utilizing J1939 communication for easy set up and reliable engine communication. Outrigger monitoring system (OMS) with improved system feedback at the hands of the operator.

> Productivity increasing options and Lift Solutions™

- Hydraulic hose reels
- Factory-installed toolbox options
- Additional valve section and controls for hydraulic accessories
- Fixed and rotating 2-person platforms
- Four function radio remote controls
- Continuous rotation

Lift Solutions™

> Chassis customization options

- Steel and aluminum tool boxes
- 15 or 30 ton pintle hitch integrated in rear of machine
- Polymeric outrigger cribbing and cribbing stowage

Truck Mod Center™

Jobsite benefits

- The steel torsion box and flatbed further reduce frame flex
- Speedy-reeve boom tip and sheave blocks simplify rigging changes by decreasing the time needed to change line reeving
- Crane components painted before assembly reduce the chance of rust, improve serviceability and enhance the appearance of the crane
- A control knob located on the swing motor brake release valve can be easily adjusted to the crane operator's swing speed preference
- Rear stabilizers include an independent stabilizer control and bolt/clamp on mounting
- Engine start/stop switches
- Outriggers are equipped with a motion alarm and an outrigger monitoring system
- Emergency stop overrides located at control station
- Crane function control knobs use ISO symbols for language independence

Serviceability

- Bearings on the boom extension and retract cables can be greased through access holes in the boom side plates
- Removable winch allows the internal telescoping cylinder to be removed quickly, without dismantling the boom
- Internal anti-two-block wire routing eliminates external reel and wire to protect crane components
- The boom sheave case is open, allowing access to replace the internal anti-two-block wire and to observe internal boom components
- Internal boom parts have been reduced, decreasing service time when rebuilding the machine

What you need, when you need it.

Get right to work with the right equipment — Manitowoc Finance gives you access to flexible, affordable financing you can use to seize profitable new opportunities as they arise.

Feel confident in your investment — rest easy with the assurance of the world's most advanced crane service and support network.

Contents

Dimensions 5

Mounting configurations 6

Working range - Series 571E2 8

Load chart - Series 571E2 9

Working range - Series 571E2 with jib 10

Load chart - Series 571E2 with jib 11

Specifications 12

Symbols glossary 15

Dimensions

Series	Retracted length	Extended length	G (wet)	Dry/Wt	With oil/Wt
571E2	8,4 m (27 ft 6 in)	21,64 m (71 ft)	1,91 m (75 in)	6677 kg (14,721 lb)	6947 kg (15,316 lb)

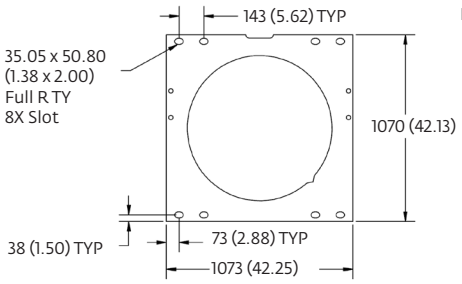

Reference 208154 Frame Base Plate
Scale:1/12

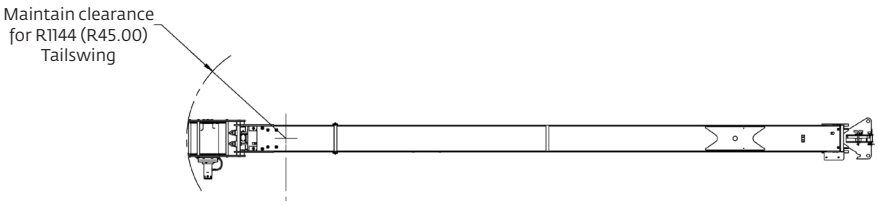

Dimensions are in mm (in) unless otherwise specified.

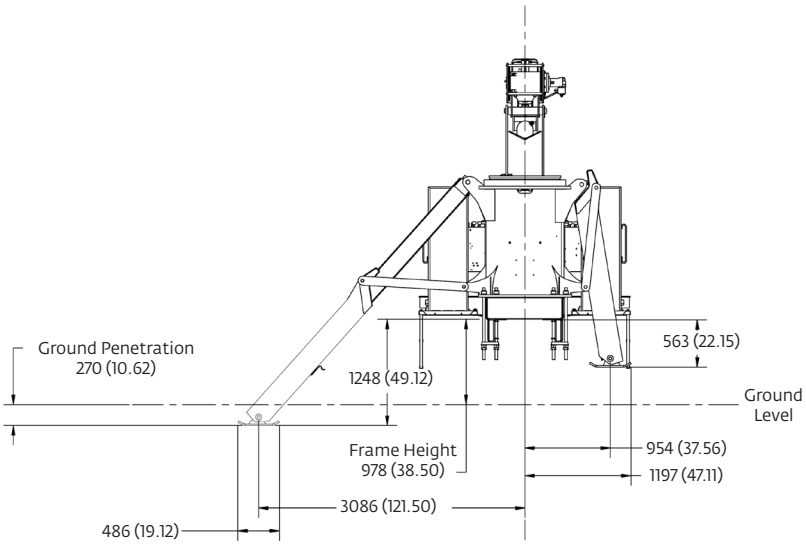

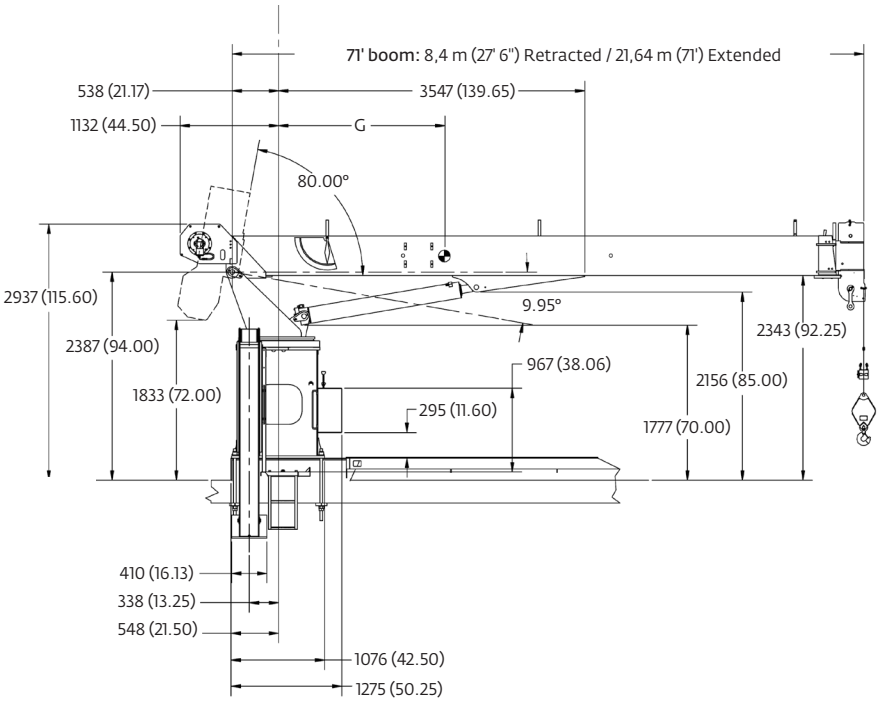

Mounting configurations

The configurations are based on the Series 500E2 with an 85% stability factor. The complete unit must be installed in accordance with factory requirements and a test performed to determine actual stability and counterweight requirements since individual truck chassis vary.

Configuration 1 with Torsion Box - 180˚ Full capacity work area

Working area: 180˚
Gross Axle Weight Rating Front: 5443 kg (12,000 lb)
Gross Axle Weight Rating Rear: 9525 kg (21,000 lb)
Gross Vehicle Weight Rating: 14 968 kg (33,000 lb)
Wheelbase: 602 cm (237 in)
Cab to Axle/trunnion (CA/CT): 427 cm (168 in)
Frame Strength: 758 MPa (110,000 PSI):

- Frame Section Modulus (SM) under crane – 261 cm^3 (15.9 in^3)
- Frame Section Modulus (SM) over rear stabilizers – 213 cm^3 (13 in^3)

Stability Weight, Front: 3130 kg (6900 lb) minimum*
Stability Weight, Rear: 2767 kg (6100 lb) minimum*
Estimated Average Final Weight: 13 608 kg (30,000 lb)

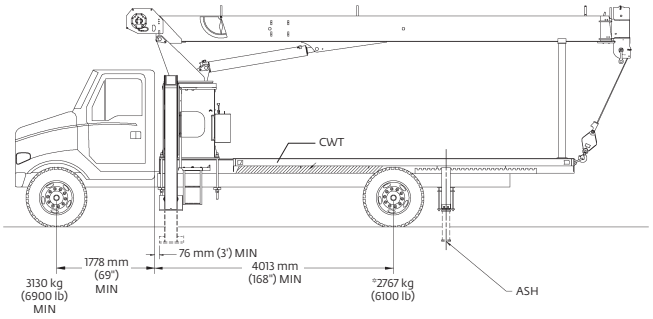

This configuration is the least expensive method for the Model 571E2. This mount, with the crane mounted behind the cab, requires the least weight of all mounts for stability; thus, you can haul larger payloads on your truck. It requires standard subbase and rear (ASH) stabilizers.

Configuration 2 with Torsion Box - 360˚ Full capacity work area

(Extended front frame rails required for SFO installation.)
Working area: 360˚
Gross Axle Weight Rating Front: 5443 kg (12,000 lb)
Gross Axle Weight Rating Rear: 9525 kg (21,000 lb)
Gross Vehicle Weight Rating: 14 968 kg (33,000 lb)
Wheelbase: 602 cm (237 in)
Cab to Axle/trunnion (CA/CT): 427 cm (168 in)
Frame Strength: 758 MPa (110,000 PSI):

- Frame Section Modulus (SM) under crane – 261 cm^3 (15.9 in^3)
- Frame Section Modulus (SM) over rear stabilizers – 213 cm^3 (13 in^3)

Stability Weight, Front: 3130 kg (6900 lb) minimum*
Stability Weight, Rear: 3175 kg (7000 lb) minimum*
Estimated Average Final Weight: 13 835 kg (30,500 lb)

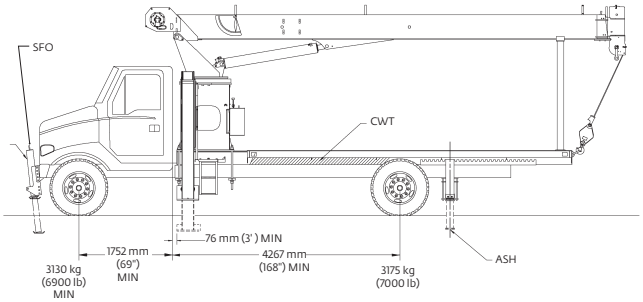

Requires front SFO stabilizer to give machine full capacity 360˚ around the truck. Truck must meet the minimum requirements above. Front stabilizer gives the machine a solid base, helping the operator control loads precisely.

**Estimated axle scale rates prior to installation of crane, stabilizers and subbase for 85% stability.*

Mounting configurations

Minimum truck requirements

Many factors must be considered in the selection of proper truck for an 500E2 crane. Items which must be considered are:

1. Axle Rating. Axle ratings are determined by the axles, tires, rims, springs, brakes, steering and frame strength of the truck. If any one of these components is below the required rating, the gross axle rating is reduced to its weakest component value.

2. Wheelbase (WB), Cab-to-Trunnion (CT) and Bare Chassis Weight. The wheelbase, CT and chassis weights shown are required so the basic 500E2 can be legally driven in most states and meet stability requirements. The dimensions given assume the sub-base is installed properly behind the truck cab. If exhaust stacks, transmission protrusions, etc., do not allow a close installation to the cab, the WB and CT dimensions must be increased. Refer to the Mounting Configuration pages for additional information.

3. Truck Frame. Try to select a truck frame that will minimize or eliminate frame reinforcement or extension of the after frame (AF). Many frames are available that have the necessary after frame (AF) section modulus (SM) and resistance to bending moment (RBM) so that reinforcing is not required. The front hydraulic jack is used for a 360˚ working range around the truck. The frame under the cab through the front suspension must have the minimum S.M. and RBM because reinforcing through the front suspension is often difficult because of engine, radiator mounts and steering mechanics. See “Truck Requirements” and “Frame Strength” pages for the necessary section modulus and resistance to bending moment values. Integral extended front frame rails are required for front center stabilizer installation.

4. Additional Equipment. In addition to the axle ratings, wheelbase, cab-to-axle requirements and frame, it is recommended that the truck is equipped with electronic engine control, increased cooling and a transmission with a PTO opening available with an extra heavy duty PTO. A conventional cab truck should be used for standard crane mounts.

5. Neutral Start Switch. The chassis must be equipped with a switch that prevents operation of the engine starter when the transmission is in gear.

Notes:

- Gross Vehicle Weight rating (GVWR) is dependent on all components of the vehicle (axles, tires, springs, frame, etc.) meeting manufacturers’ recommendations: always specify GVWR when purchasing trucks
- Diesel engines require a variable speed governor for smooth crane operation; electronic fuel injection requires EET engine remote throttle
- All mounting data is based on a National Series 500E2 with an 85% stability factor
- The complete unit must be installed in accordance with factory requirements, and a test performed to determine actual stability and counterweight requirements per SAE J765; contact the factory for details
- Transmission neutral safety interlock switch is required

Working range

Series 571E2

21,6 m (71 ft) 100% 360°

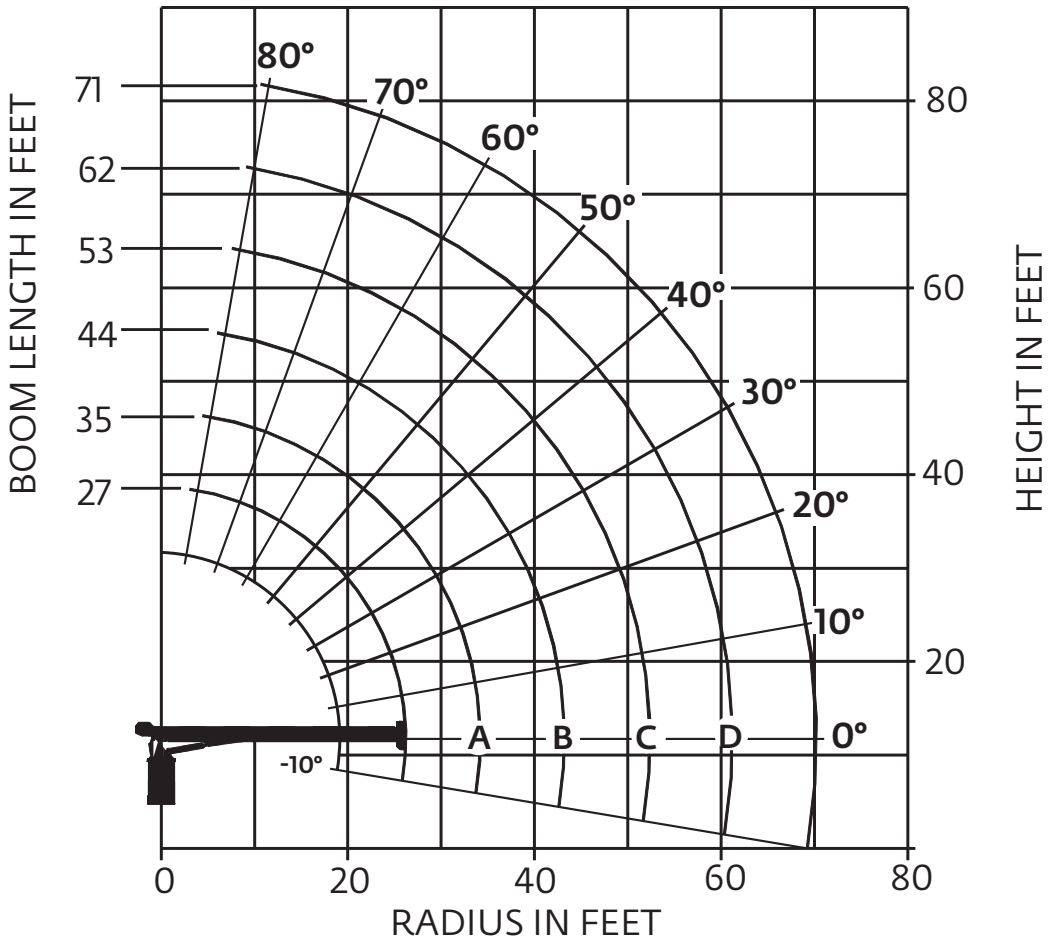

CAUTION:

- **Do not operate crane booms, jib extensions, any accessories or loads within 3 m (10 ft) of live power lines or other conductors of electricity.**
- Jib and boom capacities shown are maximum for each section.
- Do not exceed capacities at reduced radii
- Load ratings shown on the load rating charts are maximum allowable loads with the outriggers properly extended on a firm, level surface and the crane leveled and mounted on a factory recommended truck.
- Always level the crane with the level indicator located on the crane.
- The operator must reduce load to allow for factors such as wind, ground conditions, operating speeds and their effects on freely suspended loads.
- Overloading this crane may cause structural collapse or instability.
- Weights on any accessories attached to the boom or loadline must be deducted from the load chart capacities.
- Do not exceed jib capabilities at any reduced boom lengths.
- Do not deadhead lineblock against boom tip when extending boom or winching up.
- Keep at least three wraps of loadline on drum at all times.
- Use only specified cable with this machine.

THIS CHART IS ONLY A GUIDE AND SHOULD NOT BE USED TO OPERATE THE CRANE.
The individual crane's load chart, operating instructions and other instructional plates must be read and understood prior to operating the crane.

Load chart

Series 571E2

21,6 m (71 ft) 100% 360°

Pounds

LOAD RADIUS (FEET)	LOADED BOOM ANGLE	27 FT BOOM	LOADED BOOM ANGLE	A 35 FT BOOM	LOADED BOOM ANGLE	B 44 FT BOOM	LOADED BOOM ANGLE	C 53 FT BOOM	LOADED BOOM ANGLE	D 62 FT BOOM	LOADED BOOM ANGLE	71FT BOOM
5	77.5	36,000										
8	70.5	24,650	75.5	20,550								
10	66	19,500	72	17,250	76.5	16,700	79.5	16,350				
12	61	16,250	68.5	14,850	73.5	14,350	77	14,000				
14	56	14,250	64.5	13,050	71	12,600	75	12,250	77.5	12,000		
16	50.5	12,600	61	11,600	68	11,200	72.5	10,850	75.5	10,650	78	9600
20	38.5	9950	53	9450	62	9150	68	8850	72	8650	75	8000
25	16	6300	41	7450	55	7350	62	7150	67	6950	70.5	6750
30			26.5	5650	46	6060	55.5	5950	62	5800	66.5	5700
35					35.5	4900	48.5	5000	56.5	4900	61.5	4800
40					20	3600	40.5	4150	50.5	4200	57	4100
45							30.5	3400	43.5	3450	51.5	3500
50							14	2300	36	2800	46	2850
55									26	2300	39.5	2350
60											32	1950
65											22.5	1650
	0	4100	0	2650	0	1750	0	1200	0	750	0	400

THIS CHART IS ONLY A GUIDE AND SHOULD NOT BE USED TO OPERATE THE CRANE.
The individual crane's load chart, operating instructions and other instructional plates must be read and understood prior to operating the crane.

Working range

Series 571E2 with jib

21,6 m
(71 ft)

7.0 m-12.5 m
(23 ft-41 ft)

100%

360°

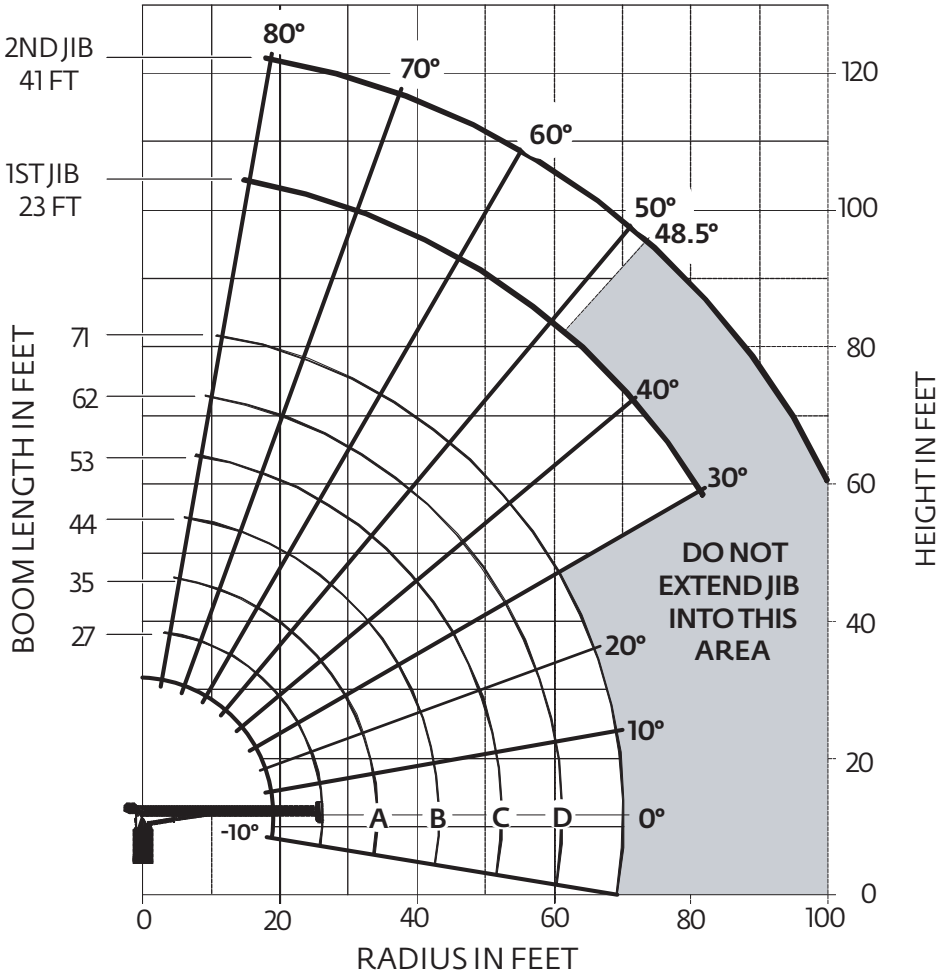

CAUTION:

- **Do not operate crane booms, jib extensions, any accessories or loads within 3 m (10 ft) of live power lines or other conductors of electricity.**
- Jib and boom capacities shown are maximum for each section.
- Do not exceed capacities at reduced radii
- Load ratings shown on the load rating charts are maximum allowable loads with the outriggers properly extended on a firm, level surface and the crane leveled and mounted on a factory recommended truck.
- Always level the crane with the level indicator located on the crane.
- The operator must reduce load to allow for factors such as wind, ground conditions, operating speeds and their effects on freely suspended loads.
- Overloading this crane may cause structural collapse or instability.
- Weights on any accessories attached to the boom or loadline must be deducted from the load chart capacities.
- Do not exceed jib capabilities at any reduced boom lengths.
- Do not deadhead lineblock against boom tip when extending boom or winching up.
- Keep at least three wraps of loadline on drum at all times.
- Use only specified cable with this machine.

THIS CHART IS ONLY A GUIDE AND SHOULD NOT BE USED TO OPERATE THE CRANE.
The individual crane's load chart, operating instructions and other instructional plates must be read and understood prior to operating the crane.

Load chart

Series 571E2 with jib

21, 6 m
(71 ft)

7.0 m-12.5 m
(23 ft-41 ft)

100%

360°

Pounds

LOAD RADIUS (FEET)	LOADED BOOM ANGLE	27 FT BOOM	LOADED BOOM ANGLE	A 35 FT BOOM	LOADED BOOM ANGLE	B 44 FT BOOM	LOADED BOOM ANGLE	C 53 FT BOOM	LOADED BOOM ANGLE	D 62 FT BOOM	LOADED BOOM ANGLE	71 FT BOOM
5	77.5	36,000										
8	70.5	24,050	75.5	20,100								
10	66	18,900	72	16,800	76.5	16,300	79.5	16,050				
12	61	15,650	68.5	14,400	73.5	13,950	77	13,700				
14	56	13,650	64.5	12,600	71	12,200	75	11,950	77.5	11,750		
16	50.5	12,000	61	11,150	68	10,800	72.5	10,550	75.5	10,400	78	9350
20	37.5	9350	53	9000	62	8750	68	8550	72	8400	75	7750
25	14	5700	41	7000	55	6950	62	6850	67	6700	70.5	6500
30			26.5	5200	46	5660	55.5	5650	62	5550	66.5	5450
35					35.5	4500	48.5	4700	56.5	4650	61.5	4550
40					20	3200	40.5	3850	50.5	3950	57	3850
45							30.5	3100	43.5	3200	51.5	3250
50							14	2000	36	2550	46	2600
55									26	2050	39.5	2100
60											32	1700
65											22.5	1400
	0	3500	0	2200	0	1350	0	900	0	500		

LOAD RADIUS (FEET)	LOADED BOOM ANGLE	23 FT JIB	LOADED BOOM ANGLE	41 FT JIB
20	77	3400		
25	74.3	2900	77.3	2050
30	70.6	2450	74.5	1800
35	67.5	2100	72.2	1550
40	64.1	1800	69.5	1400
45	60.3	1600	66.4	1200
50	57.5	1450	63.4	1050
55	53.8	1250	60.9	950
60	49.8	1100	57.8	850
65	46	950	55.2	750
70	41.6	850	51.7	600
75	36.6	750	48.1	500

NOTE:
1. Capacities do not exceed 85% stability.
2. Shaded areas are structurally limited capacities.

THIS CHART IS ONLY A GUIDE AND SHOULD NOT BE USED TO OPERATE THE CRANE.
The individual crane's load chart, operating instructions and other instructional plates must be read and understood prior to operating the crane.

Specifications

Superstructure

Boom

8,2 m – 21,6 m (27 ft – 71 ft), three-section boom with a max tip height of 24,69 m (81 ft). Includes Proportional extension via multi-stage hydraulic cylinder and cable operation; four-plate, high-strength steel construction; two-sheave, quick reeve boom nose and Easy-glide wear pads.

Boom elevation

One (1) double-acting, hydraulic cylinder with holding valve with a -10^0 to $+80^0$.

Hydraulic Capacity Alert System (HCAS) and Anti-Two Block System (ATB)

Hydraulic capacity alert (HCA) system to assist the operator in preventing crane overload when making lifts on main boom. This HCA system is a hydraulically operated, maximum capacity sensing device designed to stop all of the normal crane functions that can cause overload when maximum capacity is exceeded on the main boom. Any function that will increase the load radius plus winch up of load is interrupted when maximum capacity is exceeded. Color-coded load range gauge located at each operator station. Two indicator lights provide an alert to the operator of function power loss and distinguish whether the hydraulic capacity alert or anti-two block system is activated. A momentary override key switch for emergency repositioning of boom. Audio visual warning and crane function lockout. Hard-wired ATB circuit routed internally to the boom.

Operator station

Dual-station ASME B30.5 compliant proportional crane controls with mechanical direct-to-valve control of hoist, lift, telescope and swing functions on both the driver and passenger sides of the crane. Mechanical direct-to-valve control of all outrigger functions on both the driver and passenger sides of the crane. HCA system: Color-coded load range gauge located at each operator station; A momentary override key switch for emergency repositioning of boom. Sealed electric switches for control of engine start/stop and horn. Throttle pedal located at each side. Load chart(s) located at each side.

Slewing

One (1) planetary slewing gear with a low speed high torque motor. Integrated holding valves and spring applied, pressure released brake release circuit; 375° non-continuous rotation; manually adjustable swing speed needle valve.

Hydraulic system

Open-center hydraulics system allowing for multifunction operation of all crane functions. One (1) SAE-BB mounted, three-section gear pump for all functions and optimized system performance.

Shaft input of 2400 RPM generating:

Section #1 (Boom/Telescope/Outriggers): 68 lpm (18 gpm) max flow

Section #2 (Hoist): 128.7 lpm (34 gpm) max flow

Section #3 (Swing): 37.9 lpm (10 gpm)

66 gallon (249,8 L) hydraulic reservoir with SAE o-ring connections and integrated suction shut-off ball valve for easy maintenance and SAE o-ring hydraulic fittings and hoses.

Electrical system

Automotive grade, fully wire harnessed 12 VDC electrical system using sealed connectors.

Lower

Chassis mounting

Torsion resistant, high-strength steel subframe. Crane frame and subframe attached using threaded mounting bolts and drilled and bolted clamp plates for secure attachment to the truck chassis. Rear bumper underride protection standard on factory mounted cranes.

Mounting configurations

Standard Mount: Crane frame located behind the truck cab; Crane frame supported by a torsion resistant subframe; Subframe designed for a 20 ft (6,1 m) flatbed; A-frame style front outriggers at the crane frame; A-frame stabilizers; Full span outriggers load chart operation; boom stows over rear of truck; Removable boom rest fabricated from structural steel, located at the rear of the flatbed

Outriggers

Outrigger monitoring system for A-frame outriggers and A-frame stabilizers.

**Denotes optional equipment.*

Specifications

Optional items

- **Outriggers, Subframe and Flatbed**
  - > Single Front Outrigger (SFO) option
  - > Center mount front stabilizer with 25 in vertical stroke

- **Hook blocks**
  - > 6,35 t (7 USt) Overhaul ball for single-part-line operation
  - > Single-sheave, 11,3 t (12.5 USt) hook block for two to three part reeving
  - > Two-sheave, 19,9 t (22 USt) hook block for four to five part reeving (includes auxiliary lineblock and pendant link)

- **Jib**
  - > 7,0 m - 12,5 m (23 ft - 41 ft) telescoping boom extension (side fold for stowing), includes 5,5 m (18 ft) manual pull out section
  - > Max tip height with 21,6 m (71 ft) boom is 37,2 m (122 ft)
  - > RCL calibration for future jib option

- **Duty Cycle Package**
  - > Burst-of-speed winch control option, with dual standup control and hydraulic oil cooler, self-contained radiator system with electric fan

- **Hydraulics**
  - > Oil cooler option for duty-cycle operation
  - > One-option control circuit including valve and control lever

- **Operator Aids**
  - > Four-function wireless radio remote control
  - > Metric capacity charts
  - > Spanish documentation and decals

- **Heavy-Duty Personnel Basket**
  - > 544 kg (1200 lb) capacity steel basket with safety loops for two passengers
  - > Gravity leveling 183 cm x 107 cm (72 in x 42 in) platform
  - > Fast attachment and secure locking systems

  ** Load chart must show 1043 kg (2300 lb) minimum to operate this accessory)*

- **Bulkhead**
  - > Steel 30 in solid wall bulkhead

Specifications

Hoist

10,200 lb (4627 kg) planetary gear with a single speed motor;
Integrated motor manifold and spring applied, pressure released brake

Parts of Line	1 part line	2 part line	3 part line	4 part line	5 part line	6 part line
Max boom length (ft) at max elevations with stated rigging and load block and ground level	27,43 m (90 ft)	27,43 m (90 ft)	16,46 m (54 ft)	12,8 m (42 ft)	8,23 m (27 ft)	8,23 m (27 ft)
Lift and speed	3493 kg (7700 lb) 30 m/min (100 fpm)	6985 kg (15,400 lb) 15 m/min (50 fpm)	10 478 kg (23,100 lb) 10 m/min (33 fpm)	13 971 kg (30,800 lb) 7,6 m/min (25 fpm)	17 463 kg (38,500 lb) 6,1 m/min (20 fpm)	18 144 kg (40,000 lb) 5,1 m/min (16.7 fpm)

NOTE: All hoist lifts and speeds in this chart are shown on the fourth layer. Hoist lifts would increase on the lower layers and hoist speeds would increase on the higher layers.

Line Pulls and Reeving Information			
Hoists	**Cable specs.**	**Permissible line pulls**	**Nominal cable length**
Main	Standard 9/16" (14 mm) diameter rotation resistant Min. Breaking Strength 17 463 kg (38,500 lb)	3493 kg (7700 lb)	99,1 m (325 ft)

The approximate weight of 9/16 (14 mm) in wire rope is 1,04 kg/m (0.70 lb/ft).
*With certain boom and hoist tackle combinations, the allowable line pull may be limited by hoist performance. Refer to Hoist Performance table for lift planning to ensure adequate hoist performance on drum rope layer required.

Hoist Performance			
Wire rope layer	**Hoist Line Pull**	**Line speed**	**Drum Capacity**
1	4627 kg (10,200 lb)	33,8 m /min (111 ft/min)	19,5 m (64 ft)
2	4173 kg (9200 lb)	37,5 m /min (123 ft/min)	41,5 m (136 ft)
3	3810 kg (8400 lb)	41,2 m /min (135 ft/min)	65,5 m (215 ft)
4	3493 kg (7700 lb)	44,8 m /min (147 ft/min)	91,7 m (301 ft)
5	3221 kg (7100 lb)	48,5 m /min (159 ft/min)	120,1 m (394 ft)

*Refer to Line Pulls and Reeving Information table for max. lifting capacity of wire rope.

Synthetic rope layer height may vary and may reduce available line pull per layer.

Weight Reductions for Load Handling Devices	
Hook blocks and headache balls	
6,35 t (7 USt) overhaul ball	77,6 kg (171 lb)+
11,3 t (12.5 USt) single-sheave hook block	85 kg (187 lb)+
19,9 t (22 USt) two-sheave hook block	161 kg (355 lb)+

+ Refer to rating plate for actual weight

When lifting over boom extension, deduct total weight of all load handling devices reeved over main boom nose directly from boom extension capacity.

NOTE: All load handling devices and boom attachments are considered part of the load and suitable allowances MUST BE MADE for their combined weights. Weights are for Manitowoc furnished equipment.

Symbols glossary

Axles

Drive

Heavy duty jib

Radius

Boom

Electrical system

Hoist

Rotation

Boom elevation

Engine

Hook block

Speed

Boom extension

Extension

Hydraulic system

Steering

Boom length

Frame

Insert

Suspension

Boom nose

Fuel tank capacity

Lights

Swing

Brakes

Gear

Oil

Tires

Operators station

Grade

Outrigger controls

Transmission

Counterweight

Height (no max)

Outriggers

The Manitowoc Company, Inc.

Regional headquarters

Americas
Milwaukee, Wisconsin, USA
Tel: +1 414 760 4600

Shady Grove, Pennsylvania, USA
Tel: +1 717 597 8121

Europe and Africa
Dardilly, France - TOWERS
Tel: +33 (0) 4 72 18 20 20

Wilhelmshaven, Germany - MOBILE
Tel: +49 (0) 4421 294 0

APAC
Shanghai, China
Tel: +86 21 6457 0066

Singapore
Tel: +65 6264 1188

Middle East and India
Dubai, UAE
Tel: +971 4 8862677

This document is non-contractual. Constant improvement and engineering progress make it necessary that we reserve the right to make specification, equipment, and price changes without notice. Illustrations shown may include optional equipment and accessories and may not include all standard equipment.

©2022 The Manitowoc Company, Inc.

Form No. 500E2 Series PG
Part No. PDF/1022

www.manitowoc.com