NATIONAL CRANE®

600E2

Product Guide

ASME B30.5 • Imperial 85%

Features

- 18,1 t (20 USt) rating
- 27,4 m (90 ft) four-section boom
- Internal anti-two block
- Mounting configurations available for any application including standard, rear mount and tractor mount.

NATIONAL CRANE 600E2

The 600E2 Series delivers 18,14 t (20 USt) maximum capacity and a 30,5 m (100 ft) maximum vertical hydraulic reach with main boom.

Features

> Boom options for any application

At 90 ft, the 600E2 four-section boom is the longest in its size range. The long boom allows the operator to perform more lifts without the use of a jib, reducing setup time and improving efficiency. Other boom options include such 3-section offerings as 11,6 m (38 ft) boom, 18,3 m (60 ft) and 21,6m (71 ft) boom. The 4-section 14,9 m (49 ft) boom is great for a tractor mounted application with its short retracted length.

> Versatile outrigger system

The 600E2 comes equipped with A-frame outriggers and ASH rear stabilizers. An optional single front stabilizer is available for 360° stability. Rear stabilizers include an independent stabilizer control and bolt/clamp-on mounting. Outriggers are equipped with a motion alarm and outrigger monitoring system.

> NEW Electronic throttle and OMS system

New electronic pedals utilizing J1939 communication for easy set up and reliable engine communication. Outrigger monitoring system (OMS) with improved system feedback at the hands of the operator.

> Productivity increasing options and Lift Solutions™

- Hydraulic hose reels
- Factory-installed toolbox options
- Additional valve section and controls for hydraulic accessories
- Fixed and rotating 2-person platforms
- Four function radio remote controls
- Continuous rotation

Lift Solutions™

> Chassis customization options

- Steel and aluminum tool boxes
- 15 or 30 ton pintle hitch integrated in rear of machine
- Polymeric outrigger cribbing and cribbing stowage

Truck Mod Center™

Jobsite benefits

> Best in class performance and serviceability

- The steel torsion box and flatbed further reduce frame flex
- Speedy-reeve boom tip and sheave blocks simplify rigging changes by decreasing the time needed to change line reeving
- Crane components painted before assembly reduce the chance of rust, improve serviceability and enhance the appearance of the crane
- A control knob located on the swing motor brake release valve can be easily adjusted to the crane operator's swing speed preference
- Engine start/stop switches
- Emergency stop overrides located at control station
- Crane function control knobs use ISO symbols for language independence

> Serviceability

- Bearings on the boom and retract cables can be greased through access holes in the boom side plates.
- Removable winch allows the internal telescoping cylinder to be removed quickly, without dismantling the boom
- Internal anti-two-block wire routing eliminates external reel and wire to protect crane components
- The boom sheave case is open, allowing access to replace the internal anti-two-block wire and to observe internal boom components
- Internal boom parts have been reduced, decreasing service time when rebuilding the machine

What you need, when you need it.

Get right to work with the right equipment — Manitowoc Finance gives you access to flexible, affordable financing you can use to seize profitable new opportunities as they arise.

Feel confident in your investment — rest easy with the assurance of the world's most advanced crane service and support network.

Contents

Dimensions 5

Recommended truck specifications 6

Mounting configurations 7

Working range / load charts 8

Specifications 18

Symbols glossary 21

Dimensions

Dimensions are in mm (in) unless otherwise specified.

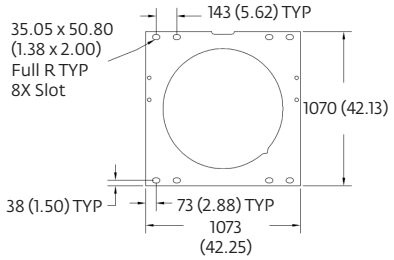

Scale: 1/12

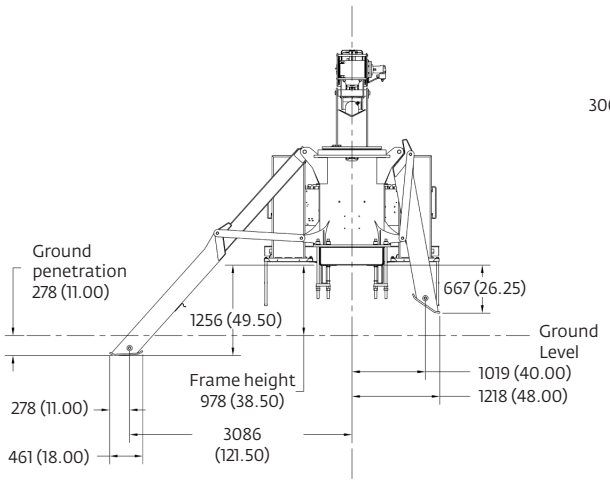

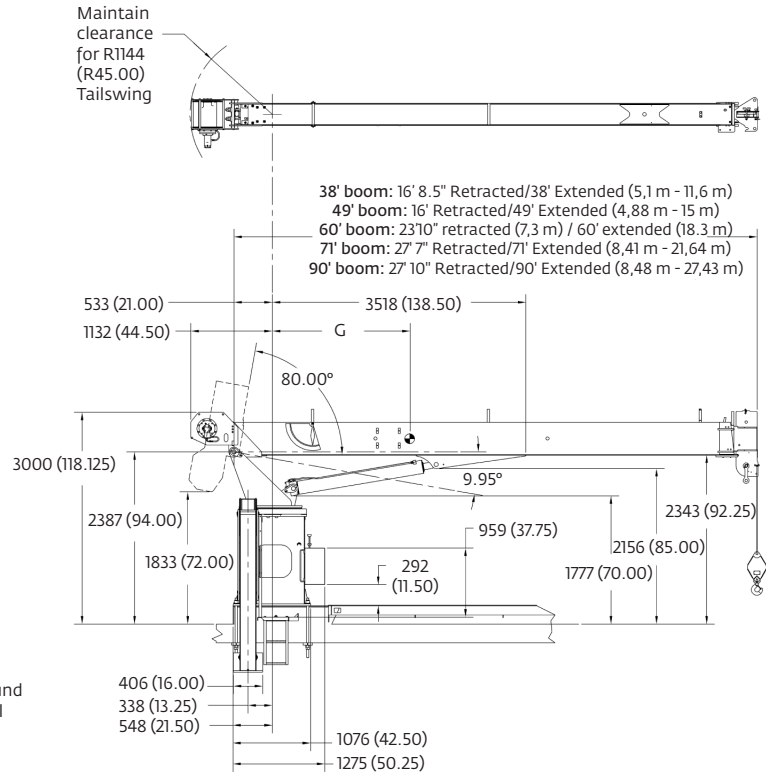

Weight includes all items except Ash 363 kg (830 lb) and bed.

Series	Retracted length	Extended length	Subbase	G (wet)	Dry/Wt	With oil/ wt
638E2	5,1 m (16 ft 7 in)	11,7 m (38 ft 3 in)	5,5 m (18 ft)	1,23 m (48.3 in)	6192 kg (13,651 lb)	6462 kg (14,246 lb)
649E2	4,9 m (16 ft)	14,9 m (49 ft)	5,5 m (18 ft)	1,28 m (50.7 in)	6481 kg (14,289 lb)	6751 kg (14,884 lb)
660E2	7,3 m (23 ft 10 in)	18,3 m (60 ft)	6,1 m (20 ft)	1,60 m (62.8 in)	6863 kg (15,131 lb)	7133 kg (15,726 lb)
671E2	8,4 m (27 ft 7 in)	21,6 m (71 ft)	6,1 m (20 ft)	1,90 m (74.7 in)	7181 kg (15,831 lb)	7451 kg (16,426 lb)
690E2	8,5 m (27 ft 10 in)	27,4 m (90 ft)	6,1 m (20 ft)	1,98 m (78.1 in)	7700 kg (16,976 lb)	7970 kg (17,571 lb)

Subbase	Weight	C.G. length
Standard 20 ft	1345 kg (2965 lb)	2,87 m (113 ft)
Standard 22 ft	1444 kg (3184 lb)	3,18 m (125 ft)

Subbase C.G. are located from center of rotation

Recommended truck specifications

The configurations are based on the Series 600E2 with an 85% stability factor. The complete unit must be installed in accordance with factory requirements and a test performed to determine actual stability and counterweight requirements since individual truck chassis vary.

Configuration 1 with Torsion Box - 180° Full capacity work area

Working area: 180°
Gross Axle Weight Rating Front: 6350 kg (14,000 lb)
Gross Axle Weight Rating Rear: 15 442 kg (34,000 lb)
Gross Vehicle Weight Rating: 21 773 kg (48,000 lb)
Wheelbase: 589 cm (232 in)
Cab to Axle/trunnion (CA/CT): 417 cm (164 in)
Frame strength: (758 MPa (110,000 PSI)
Frame Section Modulus (SM) under crane: 261 cm^3 (15.9 in^3)
Frame Section Modulus (SM) over rear stabilizers: 213 cm^3 (13 in^3)
Stability Weight, Front: 3629 kg (8000 lb) minimum*
Stability Weight, Rear: 4763 kg (10,500 lb) minimum*
Estimated Average Final Weight: 13 608 kg (30,000 lb)

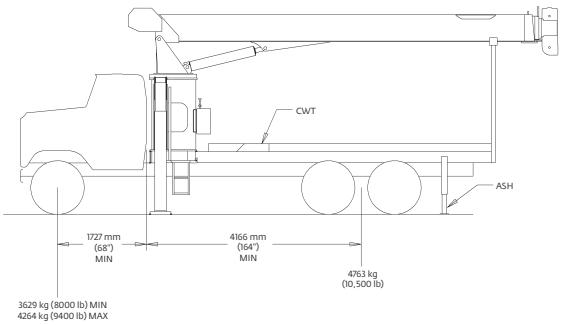

Requires front SFO stabilizer to give machine full capacity 360° around the truck. Truck must meet the minimum requirements above. Front stabilizer gives the machine a solid base, helping the operator control loads precisely. Extended front frame rails required for SFO installation.

Configuration 2 with Torsion Box - 360° Full capacity work area

Working area: 360°
Gross Axle Weight Rating Front: 6350 kg (14,000 lb)
Gross Axle Weight Rating Rear: 15 442 kg (34,000 lb)
Gross Vehicle Weight Rating: 21 773 kg (48,000 lb)
Wheelbase: 589 cm (232 in)
Cab to Axle/trunnion (CA/CT): 417 cm (164 in)
Frame strength: (758 MPa 110,000 PSI)
Frame Section Modulus (SM) under crane: 328 cm^3 (20 in^3)
Frame Section Modulus (SM) over rear stabilizers: 213 cm^3 (13 in^3)
Stability Weight, Front: 3130 kg (7700 lb) minimum*
Stability Weight, Rear: 3175 kg (10,500 lb) minimum*
Estimated Average Final Weight: 13 879 kg (30,600 lb)

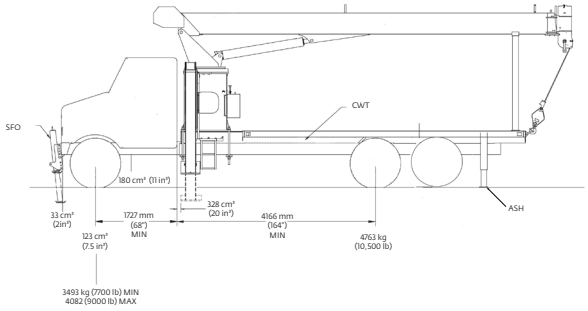

Allows the installation of the Model 600E2 on a chassis. In most cases, the chassis will not require reinforcing, and the amount of counterweight required is minimized, increasing payload capacities. Extended front frame rails required for SFO installation.

Configuration 3 with Torsion Box - Rear mount

Working area: 360°
Gross Axle Weight Rating Front: 5443 kg (12,000 lb)
Gross Axle Weight Rating Rear: 15 442 kg (34,000 lb)
Gross Vehicle Weight Rating: 20 865 kg (46,000 lb)
Wheelbase: 564 cm (222 in)
Cab to Axle/trunnion (CA/CT): 396 cm (156 in)
Frame strength: (758 MPa 110,000 PSI)
Frame Section Modulus (SM) under crane: 261 cm^3 (15.9 in^3)
Frame Section Modulus (SM) over rear stabilizers: 213 cm^3 (15.9 in^3)
Stability Weight, Front: 3629 kg (6500 lb) minimum*
Stability Weight, Rear: 4763 kg (9500 lb) minimum*
Estimated Average Final Weight: 13 040 kg (28,750 lb)

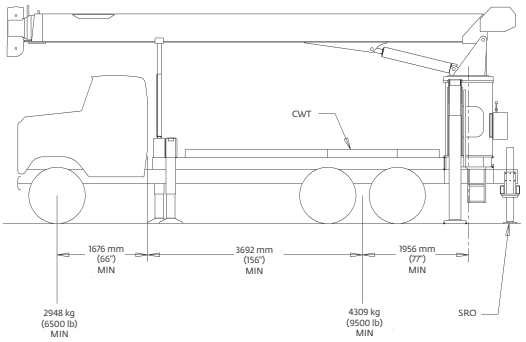

**Estimated axle scale rates prior to installation of crane, stabilizers and subbase for 85% stability.*

Minimum truck requirements

Many factors must be considered in the selection of proper truck for an 600E2 crane. Items which must be considered are:

1. Axle Rating. Axle ratings are determined by the axles, tires, rims, springs, brakes, steering and frame strength of the truck. If any one of these components is below the required rating, the gross axle rating is reduced to its weakest component value.

2. Wheelbase (WB), Cab-to-Trunnion (CT) and Bare Chassis Weight. The wheelbase, CT and chassis weights shown are required so the basic 600E2 can be legally driven in most states and meet stability requirements. The dimensions given assume the sub-base is installed properly behind the truck cab. If exhaust stacks, transmission protrusions, etc., do not allow a close installation to the cab, the WB and CT dimensions must be increased. Refer to the Mounting Configuration pages for additional information.

3. Truck Frame. Try to select a truck frame that will minimize or eliminate frame reinforcement or extension of the after frame (AF). Many frames are available that have the necessary after frame (AF) section modulus (SM) and resistance to bending moment (RBM) so that reinforcing is not required. The front hydraulic jack is used for a 360˚ working range around the truck. The frame under the cab through the front suspension must have the minimum S.M. and RBM because reinforcing through the front suspension is often difficult because of engine, radiator mounts and steering mechanics. See "Truck Requirements" and "Frame Strength" pages for the necessary section modulus and resistance to bending moment values. Integral extended front frame rails are required for front center stabilizer installation.

4. Additional Equipment. In addition to the axle ratings, wheelbase, cab-to-axle requirements and frame, it is recommended that the truck is equipped with electronic engine control, increased cooling and a transmission with a PTO opening available with an extra heavy duty PTO. A conventional cab truck should be used for standard crane mounts.

5. Neutral Start Switch. The chassis must be equipped with a switch that prevents operation of the engine starter when the transmission is in gear.

Notes:

- Gross Vehicle Weight Rating (GVWR) is dependent on all components of the vehicle (axles, tires, springs, frame, etc.) meeting manufacturers' recommendations; always specify GVWR when purchasing trucks
- Diesel engines require a variable speed governor for smooth crane operation; electronic fuel injection requires EET engine remote throttle
- All mounting data is based on a National Crane 600E2 with an 85% stability factor
- The complete unit must be installed in accordance with factory requirements, and a test performed to determine actual stability and counterweight requirements per SAE J765; contact the factory for details

Working range

Series 638E2

11,58 m (38 ft)

100%

360°

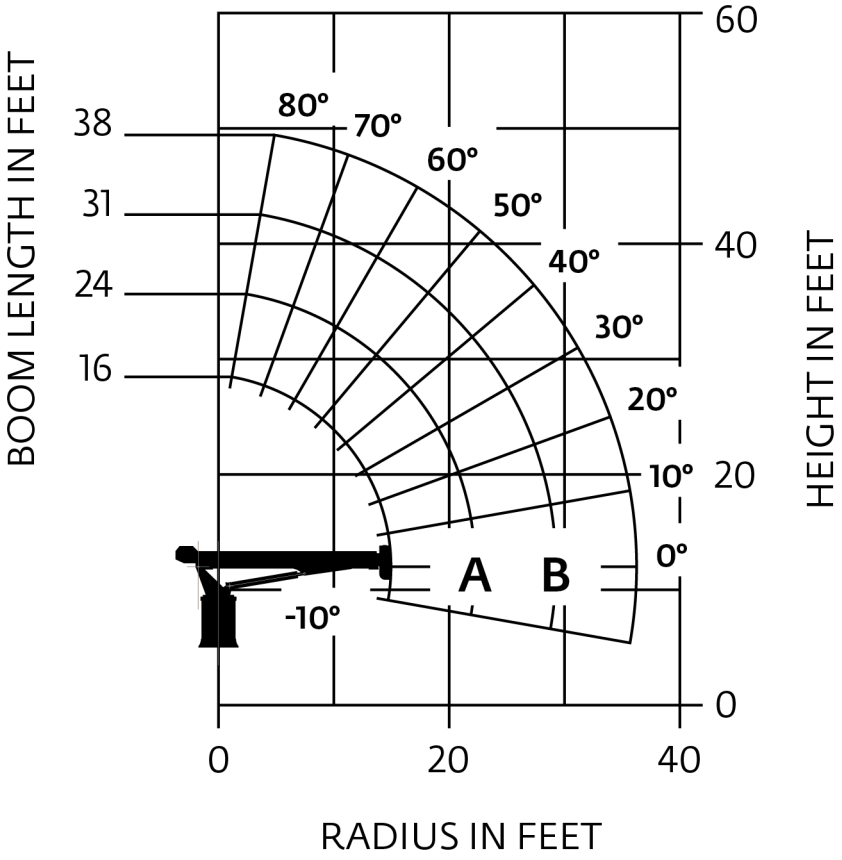

THIS CHART IS ONLY A GUIDE AND SHOULD NOT BE USED TO OPERATE THE CRANE.
The individual crane's load chart, operating instructions and other instructional plates must be read and understood prior to operating the crane.

Series 638E2

11,58 m (38 ft)

100%

360°

Pounds

LOADED RADIUS (ft)	LOADED BOOM ANGLE (deg)	16 ft BOOM (lb)	LOADED BOOM ANGLE (deg)	A 24 ft BOOM (lb)	LOADED BOOM ANGLE (deg)	B 31 ft BOOM (lb)	LOADED BOOM ANGLE (deg)	38 ft BOOM (lb)
5	67	40,000						
6	63	36,150						
8	55.5	30,250	68	28,550	74	27,500	77	25,750
10	45.5	25,600	62.5	24,300	69	23,450	73	22,200
12	34	21,900	56.5	20,900	65	20,150	70.5	19,200
14	15	16,750	50	18,150	60.5	17,800	66.5	17,050
16			43	16,200	56	15,800	64.5	15,200
18			34.5	14,200	51.5	14,150	59.5	13,750
20			26.5	12,200	47	12,900	57	12,500
25					31.5	10,150	46	9950
30							35.5	8350
35							18.5	6200
	0	10,850	0	7050	0	5100	0	3850

NOTE:
1. All capacities are in pounds, angles in degrees, radius in feet.
2. Loaded boom angles are given as reference only.
3. Shaded areas are structurally limited capacities.

THIS CHART IS ONLY A GUIDE AND SHOULD NOT BE USED TO OPERATE THE CRANE.
The individual crane's load chart, operating instructions and other instructional plates must be read and understood prior to operating the crane.

Working range

Series 649E2

15m (49 ft)

100%

360°

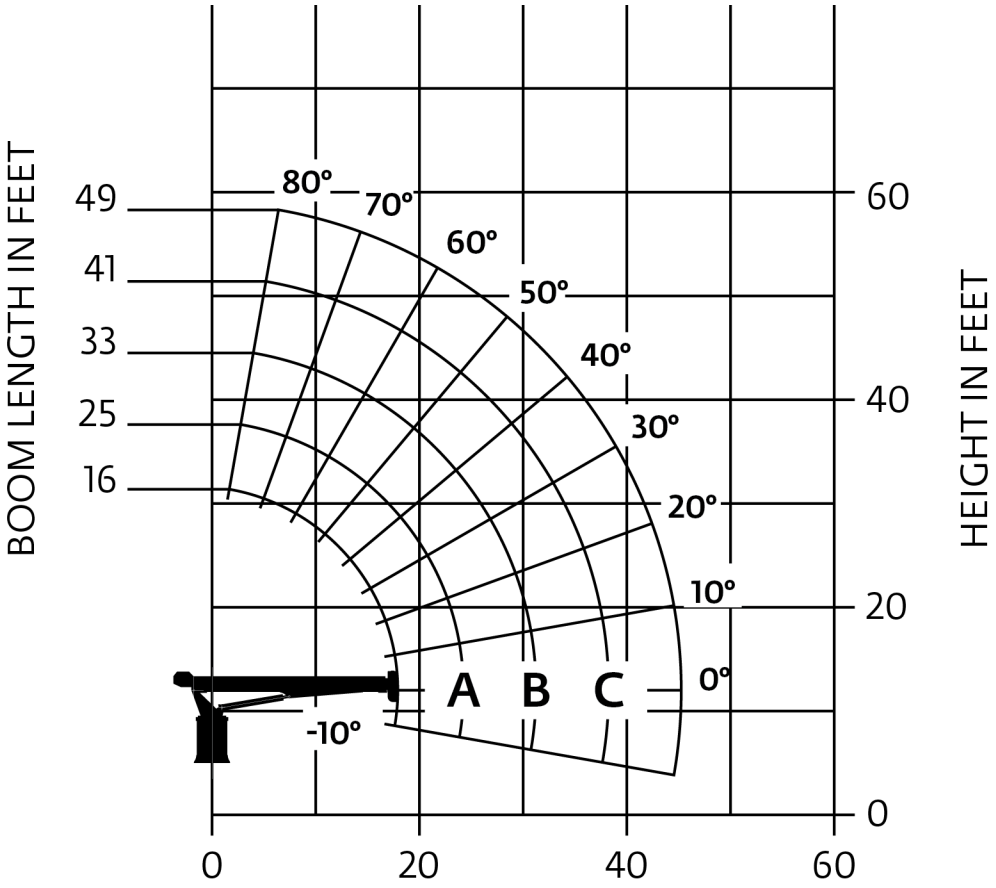

THIS CHART IS ONLY A GUIDE AND SHOULD NOT BE USED TO OPERATE THE CRANE.
The individual crane's load chart, operating instructions and other instructional plates must be read and understood prior to operating the crane.

Series 649E2

15 m (49 ft)

100%

360°

Pounds

LOADED RADIUS (ft)	LOADED BOOM ANGLE (deg)	16 ft BOOM (lb)	LOADED BOOM ANGLE (deg)	A 25 ft BOOM (lb)	LOADED BOOM ANGLE (deg)	B 33 ft BOOM (lb)	LOADED BOOM ANGLE (deg)	C 41 ft BOOM (lb)	LOADED BOOM ANGLE (deg)	49 ft BOOM (lb)
5	67	40,000	76	38,100						
8	54	29,600	68	27,400	74	26,200	77.5	25,300		
10	44	24,700	63	23,200	70.5	22,200	74.5	21,300	77.5	19,500
12	31.5	20,400	57.5	20,200	66.5	19,250	71.5	18,450	75	17,500
14	8.5	13,750	51.5	17,750	62.5	17,000	68.5	16,300	72.5	15,000
16			45	15,750	58.5	15,200	65.5	14,550	70	13,750
20			29	12,100	49.5	12,500	59	12,050	65	11,750
25					36	9850	50	9800	58	9600
30					16.5	6950	40	8050	50.5	8050
35							27.5	6450	43	6800
40									33	5650
45									18.5	4300
	0	10,950	0	6350	0	4350	0	3200	0	2600

THIS CHART IS ONLY A GUIDE AND SHOULD NOT BE USED TO OPERATE THE CRANE.
The individual crane's load chart, operating instructions and other instructional plates must be read and understood prior to operating the crane.

Working range

Series 660E2

18,3 m (60 ft) | 100% | 360°

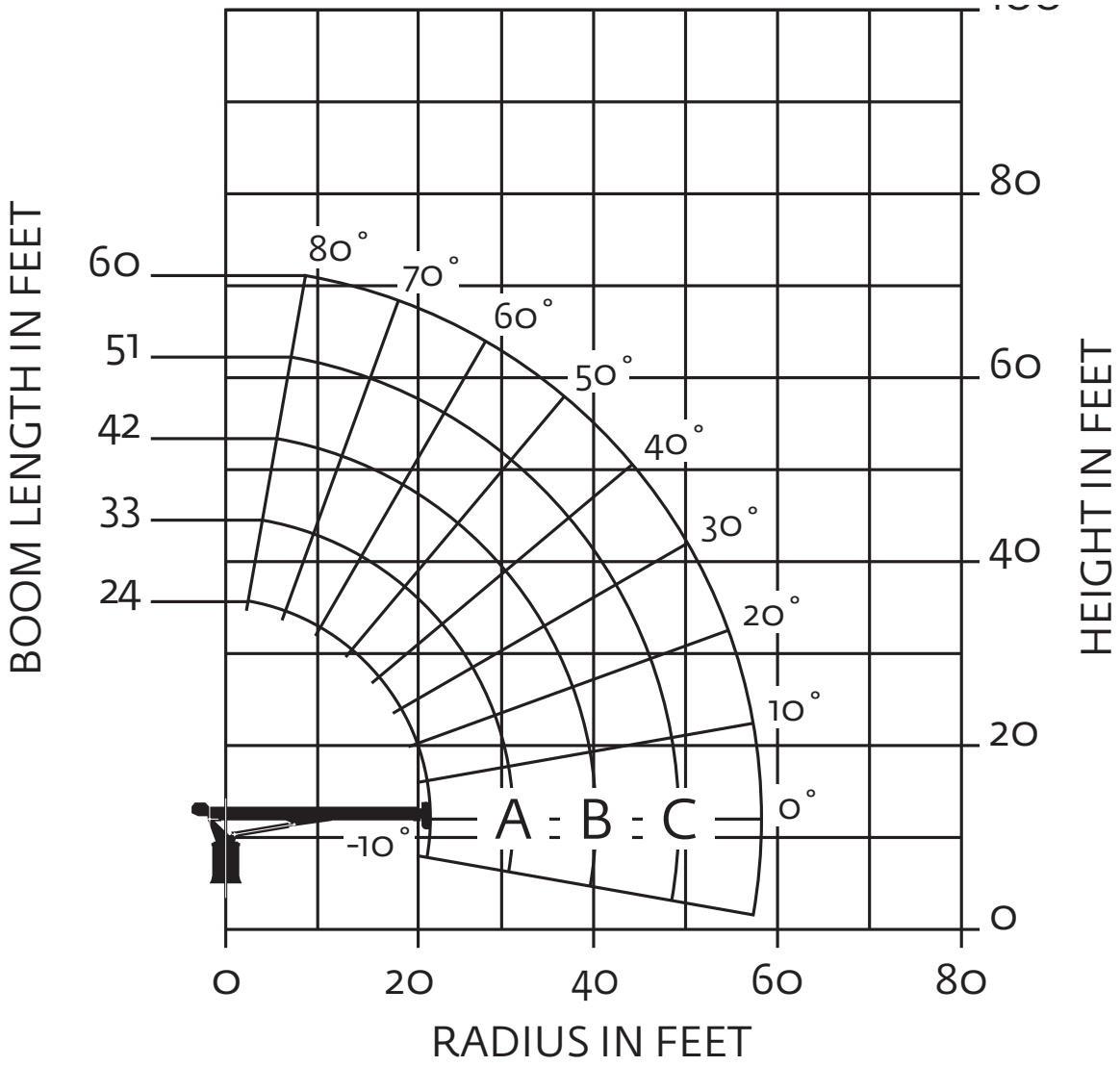

THIS CHART IS ONLY A GUIDE AND SHOULD NOT BE USED TO OPERATE THE CRANE.
The individual crane's load chart, operating instructions and other instructional plates must be read and understood prior to operating the crane.

Series 660E2

7,3 m - 18,3 m
(23 ft 10 in - 60 ft)

100%

360°

Pounds

LOADED RADIUS (ft)	LOADED BOOM ANGLE (deg)	24 FT BOOM (lb)	LOADED BOOM ANGLE (deg)5	A 33 FT BOOM (lb)	LOADED BOOM ANGLE (deg)	B 42 FT BOOM (lb)	LOADED BOOM ANGLE (deg)	C 51 FT BOOM (lb)	LOADED BOOM ANGLE (deg)	60 FT BOOM (lb)
5	75.5	40,000								
8	67.5	27,200	74	25,800	77.5	25,000				
10	62	22,800	70	21,600	75	20,700	78	20,400		
12	56	19,650	67	18,700	72	17,800	75.5	17,400	78.5	17,150
14	49.5	17,150	62.5	16,400	69	15,750	73	15,250	76.5	14,950
16	43	15,150	58.5	14,600	66	14,050	71	13,600	74.5	13,200
20	24.5	11,150	49.5	11,950	60	11,550	66	11,200	70.5	10,850
25			37.5	9400	51.5	9350	59.5	9100	65.5	8800
30			14.5	6600	42	7700	53	7600	60	7400
35					30.5	6100	45.5	6400	54.5	6200
40							36.5	5350	48	5400
45							25	4250	41	4550
50									33	3900
55									21.5	3000
	0	6150	0	3950	0	2700	0	1950	0	1300

NOTE:
1. All capacities are in pounds, angles in degrees, radius in feet.
2. Loaded boom angles are given as reference only.

THIS CHART IS ONLY A GUIDE AND SHOULD NOT BE USED TO OPERATE THE CRANE.
The individual crane's load chart, operating instructions and other instructional plates must be read and understood prior to operating the crane.

Working range

Series 671E2

21,64 m (71 ft)

100%

360°

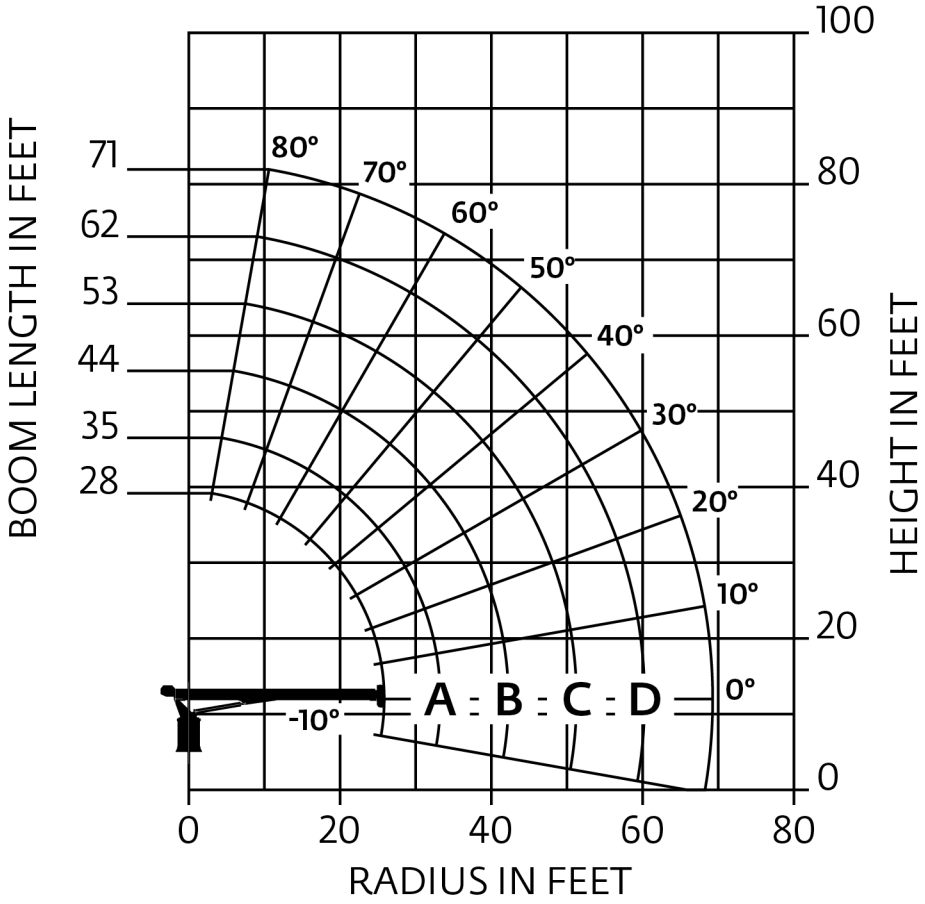

THIS CHART IS ONLY A GUIDE AND SHOULD NOT BE USED TO OPERATE THE CRANE.
The individual crane's load chart, operating instructions and other instructional plates must be read and understood prior to operating the crane.

Series 671E2

21,64 m (71 ft) 100% 360°

Pounds

LOADED RADIUS (ft)	LOADED BOOM ANGLE (deg)	28 ft BOOM (lb)	LOADED BOOM ANGLE (deg)	A 35 ft BOOM (lb)	LOADED BOOM ANGLE (deg)	B 44 ft BOOM (lb)	LOADED BOOM ANGLE (deg)	C 53 ft BOOM (lb)	LOADED BOOM ANGLE (deg)	D 62 ft BOOM (lb)	LOADED BOOM ANGLE (deg)	71 ft BOOM (lb)
5	77	40,000										
8	70.5	26,150	75	25,200	78.5	24,600						
10	65.5	21,600	71.5	21,450	76	20,800	79	20,400				
12	61	18,500	68	18,400	73	17,800	76.5	17,450	79	16,800		
14	56	16,600	64.5	16,000	70.5	15,850	74.5	15,300	77	14,650		
16	50.5	14,900	60.5	14,200	67.5	14,000	72	13,550	75	13,000	77.5	12,650
20	38	11,900	52.5	11,600	61.5	11,350	67	11,000	71	10,600	74	10,300
25	15.5	8250	40.5	9400	53.5	9100	61	8800	66	8550	69.5	8300
30			26	7100	45.5	7500	55	7300	61	7100	65.5	6850
35					35	6200	48.0	6150	55.5	6000	61	5950
40					20	4500	40.0	5200	49.5	5100	56	5050
45							29.5	4350	43	4350	51	4400
50							14.0	2800	35	3700	45.5	3800
55									25.5	3000	39	3250
60									5.5	1800	31.5	2750
65											22	2150
	0	4800	0	3600	0	2250	0	1500	0	950	0	550

THIS CHART IS ONLY A GUIDE AND SHOULD NOT BE USED TO OPERATE THE CRANE.
The individual crane's load chart, operating instructions and other instructional plates must be read and understood prior to operating the crane.

Working range

Series 690E2

27,43 m (90 ft)

100%

360°

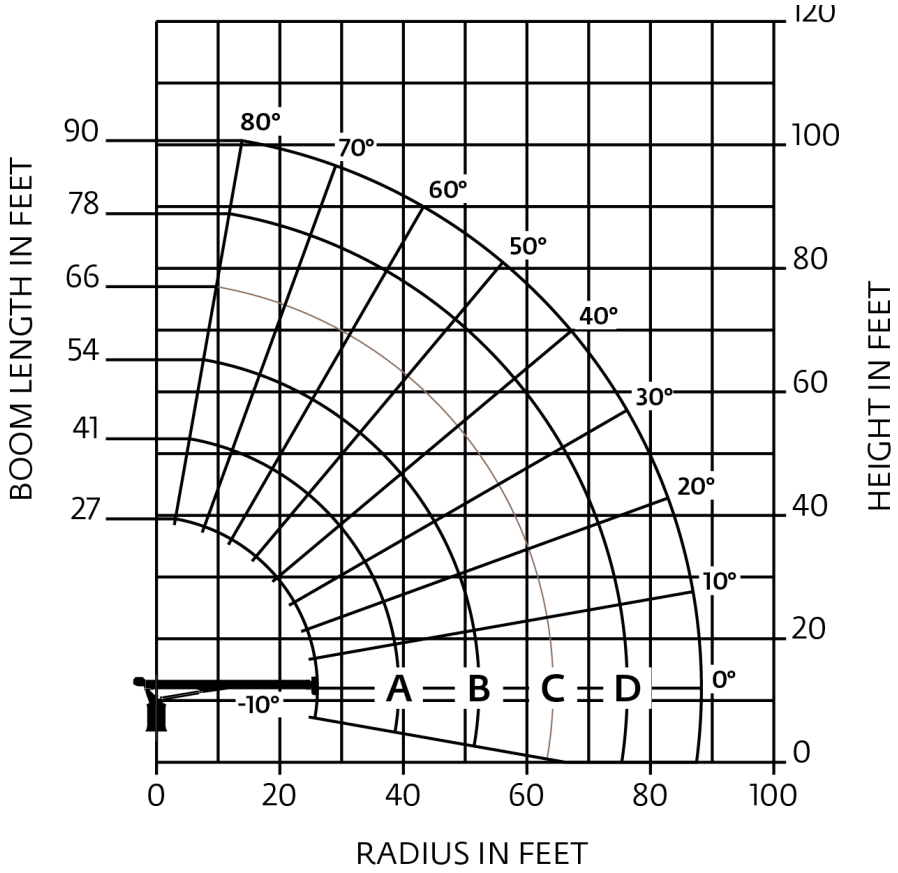

THIS CHART IS ONLY A GUIDE AND SHOULD NOT BE USED TO OPERATE THE CRANE.
The individual crane's load chart, operating instructions and other instructional plates must be read and understood prior to operating the crane.

Series 690E2

27,43 m
90 ft)

100%

360°

Pounds

LOADED RADIUS (ft)	LOADED BOOM ANGLE (deg)	27 ft BOOM (lb)	LOADED BOOM ANGLE (deg)	A 41 ft BOOM (lb)	LOADED BOOM ANGLE (deg)	B 54 ft BOOM (lb)	LOADED BOOM ANGLE (deg)	C 66 ft BOOM (lb)	LOADED BOOM ANGLE (deg)	D 78 ft BOOM (lb)	LOADED BOOM ANGLE (deg)	90 ft BOOM (lb)
5	77	40,000										
8	70	25,750										
10	66	21,400	74	20,950								
12	61.5	18,450	71	17,750	76	17,000						
14	57	16,400	68	15,250	74	15,000	77.5	14,450				
16	51	14,750	65.5	13,300	71.5	13,200	75.5	12,600				
20	40	11,250	58.5	10,800	67.5	10,500	72	9950	76	9700	77.5	7850
25	19	7500	50	9050	61.5	8150	67	7900	71.5	7750	74.5	7550
30			40	7550	55	6750	62.5	6450	68	6250	71.5	6150
35			26.5	5250	48	5700	58	5450	63.5	5200	68	5050
40					40	4600	52	4550	59.5	4400	64.5	4200
45					32	3850	46.5	3850	54.5	3700	61	3550
50					16.5	2450	39.5	3150	50	3150	57	3000
55							31	2550	44.5	2650	53.0	2550
60							21.5	1800	39.5	2250	48.5	2150
65									32.5	1750	44	1850
70									24	1250	39	1500
75									11	450	33	1150
80											26.5	800
	0	4150	0	1950	0	850						

THIS CHART IS ONLY A GUIDE AND SHOULD NOT BE USED TO OPERATE THE CRANE.
The individual crane's load chart, operating instructions and other instructional plates must be read and understood prior to operating the crane.

Specifications

Superstructure

Boom

Five boom length options:

- 4,9 m – 11,6 m (16 ft – 38 ft), three-section with a max tip height of 14,63 m (48 ft)
- 4,96 m – 14,9 m (16 ft – 49 ft), four-section with a max tip height of 17,98 m (59 ft)
- 7,3 m - 18,3 m (24 ft – 60 ft), three-section with a max tip height of 21 m (70 ft)
- 8,2 m – 21,6 m (27 ft – 71 ft), three-section with a max tip height of 24,69 m (81 ft)
- 8,23 m – 27,4 m (27 ft – 90 ft), four-section with a max tip height of 30,48 m (100 ft)

Proportional extension via multi-stage hydraulic cylinder and cable operation; four-plate, high-strength steel construction; two-sheave, quick reeve boom nose and Easy-glide wear pads.

Boom elevation

One (1) double-acting, hydraulic cylinder with holding valve with a -10^0 to $+80^0$

Hydraulic Capacity Alert System (HCAS) and Anti-Two Block System (ATB)

Hydraulic capacity alert (HCA) system to assist the operator in preventing crane overload when making lifts on main boom. This HCA system is a hydraulically operated, maximum capacity sensing device designed to stop all of the normal crane functions that can cause overload when maximum capacity is exceeded on the main boom. Any function that will increase the load radius plus winch up of load is interrupted when maximum capacity is exceeded. Color-coded load range gauge located at each operator station. Two indicator lights provide an alert to the operator of function power loss and distinguish whether the hydraulic capacity alert or anti-two block system is activated. A momentary override key switch for emergency repositioning of boom. Audio visual warning and crane function lockout. Hard-wired ATB circuit routed internally to the boom.

Operator station

Dual-station ASME B30.5 compliant proportional crane controls with mechanical direct-to-valve control of hoist, lift, telescope and swing functions on both the driver and passenger sides of the crane. Mechanical direct-to-valve control of all outrigger functions on both the driver and passenger sides of the crane. HCA system: Color-coded load range gauge located at each operator station; A momentary override key switch for emergency repositioning of boom. Sealed electric switches for control of engine start/stop and horn. Throttle pedal located at each side. Load chart(s) located at each side.

Slewing

One (1) planetary slewing gear with a low speed high torque motor. Integrated holding valves and spring applied, pressure released brake release circuit; 375° non-continuous rotation; manually adjustable swing speed needle valve.

Hydraulic system

Open-center hydraulics system allowing for multifunction operation of all crane functions. One (1) SAE-BB mounted, three-section gear pump for all functions and optimized system performance.

Shaft input of 2400 RPM generating:

Section #1 (Boom/Telescope/Outriggers): 68 lpm (18 gpm) max flow

Section #2 (Hoist): 128.7 lpm (34 gpm) max flow

Section #3 (Swing): 37.9 lpm (10 gpm)

66 gallon (249,8 L) hydraulic reservoir with SAE o-ring connections and integrated suction shut-off ball valve for easy maintenance and SAE o-ring hydraulic fittings and hoses.

Electrical system

Automotive grade, fully wire harnessed 12VDC electrical system using sealed connectors.

**Denotes optional equipment.*

Lower

Chassis mounting

Torsion resistant, high-strength steel subframe. Crane frame and subframe attached using threaded mounting bolts and drilled and bolted clamp plates for secure attachment to the truck chassis. Rear outriggers attached using Huck® fasteners to both the truck frame and subframe to ensure a secure and maintenance-free connection. Rear bumper underride protection standard on factory mounted cranes.

Mounting configurations

Standard Mount: Crane frame located behind the truck cab; Crane frame supported by a torsion resistant subframe; Subframe designed for a 20ft (6,1m) flatbed; A-frame style front outriggers at the crane frame; A-frame stabilizers; Full span outriggers load chart operation; boom stows over rear of truck; Removable boom rest fabricated from structural steel, located at the rear of the flatbed

Rear mount: Crane frame located at the rear of the truck chassis; Crane frame supported by a torsion resistant subframe; Subframe designed for a 14ft (4,26m) flatbed; A-frame style front outriggers at the crane frame; Out and Down style over-frame outriggers behind truck cab; Full span outriggers load chart operation; Boom stows over front of truck; Fixed boom rest fabricated from structural steel, located on the top of the front outrigger box

Tractor Mount: Crane frame located behind the truck cab on a short wheelbase, fifth wheel equipped truck; Crane frame supported by a torsion resistant subframe; A-frame style front outriggers at the crane frame; A-frame stabilizers; Full span outriggers load chart operation; Boom stows over front of truck; Pivoting front boom carrying rack or "A" frame style boom carrying rack for stowing boom over the rear.

Outriggers

Outrigger monitoring system for A-frame outriggers and rear stabilizer beam extension standard.

Optional items

- **Outriggers, Subframe and Flatbed**
  - > Single Front Outrigger (SFO) option
  - > Wood and super-duty wood beds
- **Hook blocks**
  - > 6,35 t (7 USt) Overhaul ball for single-part-line operation
  - > Single-sheave, 11,3 t (12.5 USt) hook block for two to three part reeving
  - > Two-sheave, 19,9 t (22 USt) hook block for four to five part reeving (includes auxiliary lineblock and pendant link)
  - > Three-sheave, 27,2 t (30 USt) quick-reeve hook block for six-part reeving (includes auxiliary lineblock and pendant link)
- **Duty Cycle Package**
  - > Burst of Speed (BOS) hoist control and hydraulic oil cooler options
  - > Suggested for high duty-cycle and demanding jobsite applications
- **Continuous rotation**
  - > Provides 360deg continuous rotation of crane in either the clockwise or counterclockwise direction
  - > Includes hydraulic and electrical swivels
  - > NOTE: Cannot be used in conjunction with some hydraulic options
- **Hydraulics**
  - > Oil cooler option for duty-cycle operation
  - > One-option control circuit including valve and control lever
- **Operator Aids**
  - > Four-function wireless radio remote control
  - > Metric capacity charts
  - > Spanish documentation and decals
- **Personnel platforms**
  - > One (1) or Two(2) person steel, non-insulated, gravity hung, platform options
  - > Capacities up to 544,3 kg (1200 lb) on main boom and 226,7 kg (600 lb) on jib
  - > Basket test weight sets available for each
  - > B1-S, BSA-1, BSA-R1 (provides rotation)
- **Bulkhead**
  - > Steel 762 mm (30 in) solid wall bulkhead

**Denotes optional equipment.*

Specifications

Hoist

10,200 lb (4627 kg) planetary gear with a single speed motor;
Integrated motor manifold and spring applied, pressure released brake

Parts of Line	1 part line	2 part line	3 part line	4 part line	5 part line	6 part line
Max boom length (ft) at max elevations with stated rigging and load block and ground level	27,43 m (90 ft)	27,43 m (90 ft)	16,46 m (54ft)	12,8 m (42 ft)	8,23 m (27 ft)	8,23 m (27 ft)
Lift and speed	3493 kg (7700 lb) 30 m/min (100 fpm)	6985 kg (15,400 lb) 15 m/min (50 fpm)	10 478 kg (23,100 lb) 10 m/min (33 fpm)	13 971 kg (30,800 lb) 7,6 m/min (25 fpm)	17 463 kg (38,500 lb) 6,1 m/min (20 fpm)	18 144 kg (40,000 lb) 5,1 m/min (16.7 fpm)

NOTE: All hoist lifts and speeds in this chart are shown on the fourth layer. Hoist lifts would increase on the lower layers and hoist speeds would increase on the higher layers.

Line Pulls and Reeving Information			
Hoists	**Cable specs.**	**Permissible line pulls**	**Nominal cable length**
Main	Standard 9/16" (14 mm) diameter rotation resistant Min. Breaking Strength 17 463 kg (38,500 lb)	3493 kg (7700 lb)	99,1 m (325 ft)

The approximate weight of 9/16 (14 mm) in wire rope is 1,04 kg/m (0.70 lb/ft).
*With certain boom and hoist tackle combinations, the allowable line pull may be limited by hoist performance. Refer to Hoist Performance table for lift planning to ensure adequate hoist performance on drum rope layer required.

Hoist Performance			
Wire rope layer	**Hoist Line Pull**	**Line speed**	**Drum Capacity**
1	4627 kg (10,200 lb)	33,8 m /min (111 ft/min)	19,5 m (64 ft)
2	4173 kg (9200 lb)	37,5 m /min (123 ft/min)	41,5 m (136 ft)
3	3810 kg (8400 lb)	41,2 m /min (135 ft/min)	65,5 m (215 ft)
4	3493 kg (7700 lb)	44,8 m /min (147 ft/min)	91,7 m (301 ft)
5	3221 kg (7100 lb)	48,5 m /min (159 ft/min)	120,1 m (394 ft)

*Refer to Line Pulls and Reeving Information table for max. lifting capacity of wire rope.

Synthetic rope layer height may vary and may reduce available line pull per layer.

Weight Reductions for Load Handling Devices	
Hook blocks and headache balls	
6,35 t (7 USt) overhaul ball	77,6 kg (171 lb)+
11,3 t (12.5 USt) single-sheave hook block	85 kg (187 lb)+
19,9 t (22 USt) two-sheave hook block	161 kg (355 lb)+
27,2 t (30 USt) three-sheave hook block	261 kg (575 lb)+

+ Refer to rating plate for actual weight

When lifting over boom extension, deduct total weight of all load handling devices reeved over main boom nose directly from boom extension capacity.

NOTE: All load handling devices and boom attachments are considered part of the load and suitable allowances MUST BE MADE for their combined weights. Weights are for Manitowoc furnished equipment.

Symbols glossary

Axles

Drive

Heavy duty jib

Radius

Boom

Electrical system

Hoist

Rotation

Boom elevation

Engine

Hook block

Speed

Boom extension

Extension

Hydraulic system

Steering

Boom length

Frame

Insert

Suspension

Boom nose

Fuel tank capacity

Lights

Swing

Brakes

Gear

Oil

Tires

Operators station

Grade

Outrigger controls

Transmission

Counterweight

Height (no max)

Outriggers

Notes

Notes

The Manitowoc Company, Inc.

Regional headquarters

Americas
Milwaukee, Wisconsin, USA
Tel: +1 414 760 4600

Shady Grove, Pennsylvania, USA
Tel: +1 717 597 8121

Europe and Africa
Dardilly, France - TOWERS
Tel: +33 (0) 4 72 18 20 20

Wilhelmshaven, Germany - MOBILE
Tel: +49 (0) 4421 294 0

APAC
Shanghai, China
Tel: +86 21 6457 0066

Singapore
Tel: +65 6264 1188

Middle East and India
Dubai, UAE
Tel: +971 4 8862677

©2020 The Manitowoc Company, Inc.

Form No.
Part No. 17-006/2M/0520

This document is non-contractual. Constant improvement and engineering progress make it necessary that we reserve the right to make specification, equipment, and price changes without notice. Illustrations shown may include optional equipment and accessories and may not include all standard equipment.

©2022 The Manitowoc Company, Inc.

Form No. 600E2 PG
Part No. 17-006/2M/1022

www.manitowoc.com