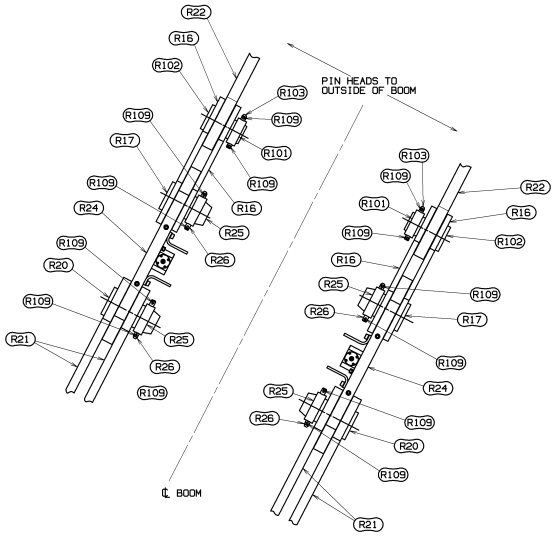

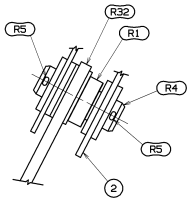

DETAIL A
SCALE 0.200

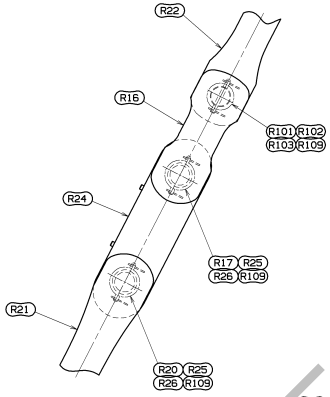

DETAIL B
SCALE 0.200

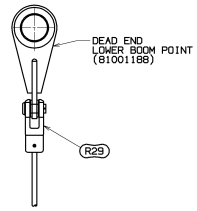

DETAIL C
SCALE 0.100

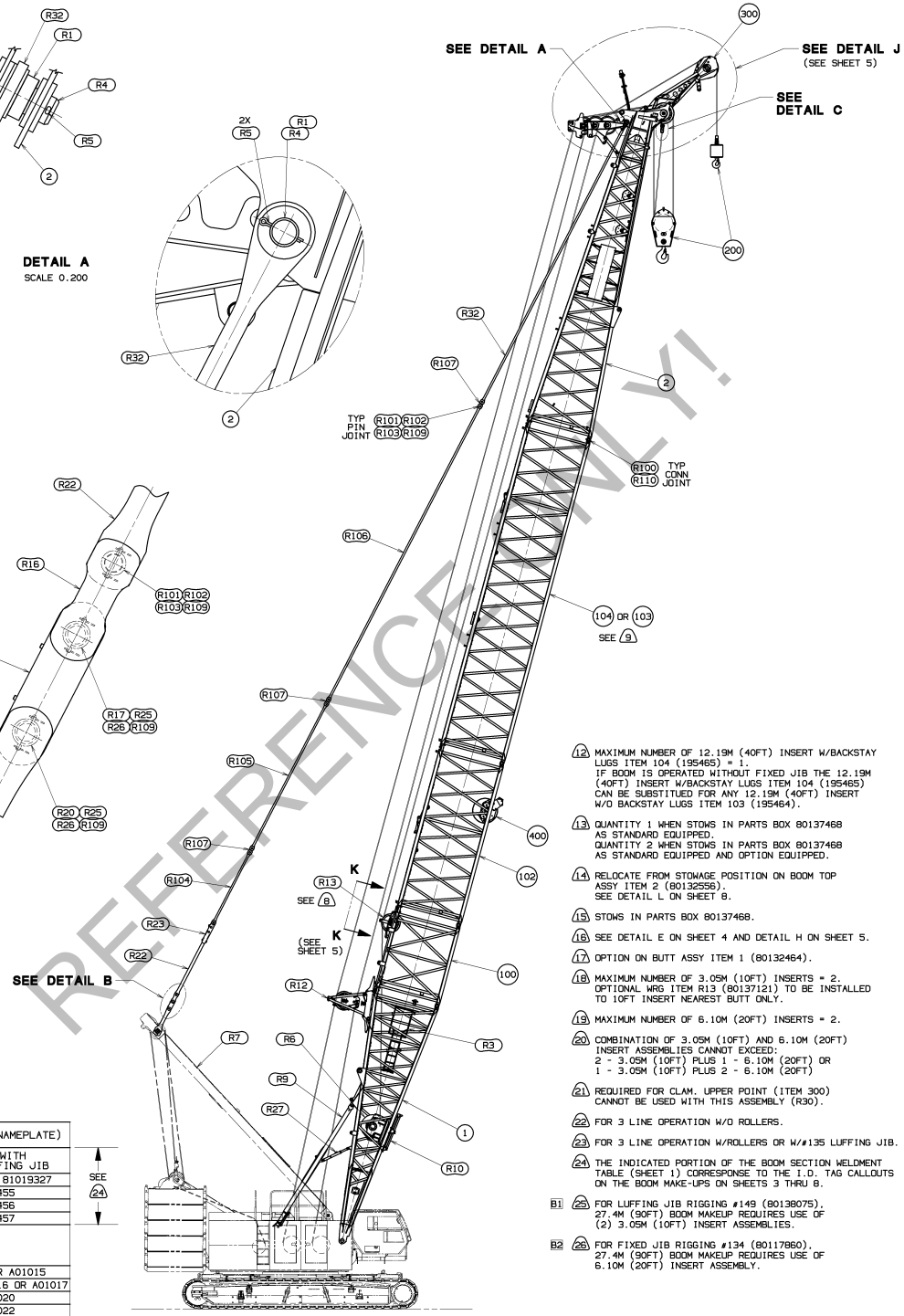

42.7 M (140.0 FT)
#82A-82 BOOM SHOWN

	BOOM SECTION WELDMENT (THIS NUMBER APPEARS ON NAMEPLATE)	
BOOM SECTION ASSEMBLY	BOOM ONLY, BOOM WITH #134 FIXED JIB, OR BOOM WITH #135 LUFFING JIB	BOOM WITH #149 LUFFING JIB
3.05M (10FT) INSERT A01018 (ITEM 100)	A01019 OR B1019327	A01019 OR B1019327
6.10M (20FT) INSERT 195463 (ITEM 102)	195455	195455
12.19M (40FT) INSERT 195464 (A) (ITEM 103)	195456	195456
12.19M (40FT) INSERT 195465 (B) (ITEM 104)	195457	195457
BOOM SECTIONS/ASSEMBLIES ABOVE REPLACE PAST PRODUCTION BOOM LISTED BELOW	BOOM WELDMENTS/MODIFICATIONS LISTED BELOW ARE ACCEPTABLE FOR WELDMENTS LISTED ABOVE	
3.05M (10FT) (C)	195454, A01014 OR A01015	A01014 OR A01015
3.05M (10FT) (D)	A01122, 196006, A01016 OR A01017	A01122, A01016 OR A01017
6.10M (20FT) INSERT	A01020	A01020
12.19M (40FT) INSERT (A)	A01022	A01022
12.19M (40FT) INSERT (B)	A01021, B1017782	A01021, B1017782

SEE 24

(A) WITHOUT JIB BACKSTAY LUGS
(B) WITH JIB BACKSTAY LUGS
(C) WITH SHEAVE FRAME WELDED TO INSERT
(D) WITHOUT SHEAVE FRAME

12 MAXIMUM NUMBER OF 12.19M (40FT) INSERT W/BACKSTAY LUGS ITEM 104 (195465) = 1.
IF BOOM IS OPERATED WITHOUT FIXED JIB THE 12.19M (40FT) INSERT W/BACKSTAY LUGS ITEM 104 (195465) CAN BE SUBSTITUED FOR ANY 12.19M (40FT) INSERT W/O BACKSTAY LUGS ITEM 103 (195464).

13 QUANTITY 1 WHEN STOWS IN PARTS BOX 80137468 AS STANDARD EQUIPPED.
QUANTITY 2 WHEN STOWS IN PARTS BOX 80137468 AS STANDARD EQUIPPED AND OPTION EQUIPPED.

14 RELOCATE FROM STOWAGE POSITION ON BOOM TOP ASSY ITEM 2 (80132556).
SEE DETAIL L ON SHEET 8.

15 STOWS IN PARTS BOX 80137468.

16 SEE DETAIL E ON SHEET 4 AND DETAIL H ON SHEET 5.

17 OPTION ON BUTT ASSY ITEM 1 (80132464).

18 MAXIMUM NUMBER OF 3.05M (10FT) INSERTS = 2.
OPTIONAL WRG ITEM R13 (80137121) TO BE INSTALLED TO 10FT INSERT NEAREST BUTT ONLY.

19 MAXIMUM NUMBER OF 6.10M (20FT) INSERTS = 2.

20 COMBINATION OF 3.05M (10FT) AND 6.10M (20FT) INSERT ASSEMBLIES CANNOT EXCEED:
2 - 3.05M (10FT) PLUS 1 - 6.10M (20FT) OR
1 - 3.05M (10FT) PLUS 2 - 6.10M (20FT)

21 REQUIRED FOR CLAM. UPPER POINT (ITEM 300) CANNOT BE USED WITH THIS ASSEMBLY (R30).

22 FOR 3 LINE OPERATION W/O ROLLERS.

23 FOR 3 LINE OPERATION W/ROLLERS OR W/#135 LUFFING JIB.

24 THE INDICATED PORTION OF THE BOOM SECTION WELDMENT TABLE (SHEET 1) CORRESPONSE TO THE I.D. TAG CALLOUTS ON THE BOOM MAKE-UPS ON SHEETS 3 THRU 8.

B1 25 FOR LUFFING JIB RIGGING #149 (80138075), 27.4M (90FT) BOOM MAKEUP REQUIRES USE OF (2) 3.05M (10FT) INSERT ASSEMBLIES.

B2 26 FOR FIXED JIB RIGGING #134 (80117860), 27.4M (90FT) BOOM MAKEUP REQUIRES USE OF 6.10M (20FT) INSERT ASSEMBLY.

BILL OF MATERIAL

ITEM NO.	NO. REQ'D	DESCRIPTION	MATERIAL NO.	MATERIAL	CODE NO. OR DWG. NO.	
		BOOM RIGGING B10:82A				
1	1	BUTT ASSY #82A 9.14M	80132464		1	
2	1	TOP ASSY #82A 12.19M	80132556		2	
3						
		NO. REQ'D FOR THE FOLLOWING ITEMS ARE IN THE BOOM LENGTH TABLE (SHEET 2)				
100		INSERT ASSY #82 10FT	A01018		3	
101						
102		INSERT ASSY #82, 20FT	195463		4	
103		INSERT ASSY #82, 40FT	195464		5	
104		INSERT ASSY #82, 40FT BSTAY	195465		6	
105						
		OPTION 1: HOOK BLOCKS				
200	1	HOOK BLOCK SHIP LOOSE OPTIONS	80141414		10	
		OPTION 2: UPPER BOOM POINT				
300	1	UPPER POINT ASSEMBLY	80118578		7	
		OPTION 3: TAGLINE				
B8 400	1	TAGLINE ASSY #82 OR #82A	80153245			B8
		BASIC REFERENCE ITEMS				
R1	2	SPACER 5.500D X 3.561D X 1.62 LG	162576			
R2	2	SPACER TUBE	170669		15	
R3	1	LADDER BOOM STORAGE	177969		17	
R4	2	PIN 2 HOLE 3.50 DIA X 7.85	196028			
R5	4	PIN COTTER 1/2 DIA X 4.50 LG	562174			
R6	1	DRUM AUX ASSY #82A BUTT	80127911		17	
R7	1	MAST ASSY LIVE MAST	80127776			
R8	1	SOCKET BUTTON 22-26 MM	80129493		15	
R9	2	STOP BOOM #82A	80133073			
R10	1	STAND BOOM #82A BUTT ASSY	80133176		17	
R11	1	ROPE GUIDE ASSY UPPER TOP W/O ROLLERS	80134378		22	
R12	1	ROPE GUIDE ASSY #82A BUTT	80136053			
R13	1	ROPE GUIDE AUX DRUM W/SPACERS	80137121		8	
R14	2	SPACER 145.5 X 131.5 X 177.0	80137122		15	
R15	1	ROTATING BED INSTALLATION	80137154			
R16	4	LINK LOAD CELL #82A TOP	80137524			
R17	2	PIN WITH HEAD 69.5 X 79.3 LG	80137795			
R18	1	ROPE GUIDE ASSY UPPER TOP W/ROLLERS	80140054		23	
R19	1	ESI ANEMOMETER POSN LT	80140711		14	
R20	2	PIN WITH HEAD 69.5 X 99.3 LG	80146244			
R21	4	STRAP ASSY 25 MM	80146246			
R22	2	STRAP 1.25 INCH	80146247			
R23	4	LINK MAST ADJUST #82 BOOM	80148999		16	
R24	2	LINK ASSY LOAD	80146412			
R25	4	COLLAR 70.50mm I.D.	81029689			
R26	4	PIN 2 HOLE 12.7 DIA X 98.0 LG	81029708			
R27	2	STRUT WELD BOOM STOP	A05315			
R28	2	SHIM .134 (in) THK.	A16907		15	
R29	-	SOCKET BUTTON 22-26MM WIRE ROPE	A11041		13	
R30	1	WIRE ROPE GUIDE SUPPORT ASSEMBLY	179663		21	
R31	2	PIN 1 HOLE W/HD .75 DIA X 3.26 LG	195319			
R32	2	STRAP BOOM SUPPORT	195472			
R33	2	PENDANT	277511			
R34	2	PIN COTTER 3/16 DIA X 1.25 LG	562084			
		NO. REQ'D FOR THE FOLLOWING REFERENCE ITEMS ARE IN THE BOOM LENGTH TABLE				
R100		PIN 2 HOLE 2.75 DIA X 4.71 LG	170362			
R101		COLLAR 3.00 DIA X 1.00 LG	179862			
R102		PIN 1 HOLE W/HD 2.25 DIA X 3.11 LG	179863			
R103		PIN 2 HOLE .50 DIA X 3.28 LG	179959			
R104		STRAP BOOM SUPPORT 9 FT 5.00	192293			
R105		STRAP BOOM SUPPORT 19 FT 5.00	192294			
R106		STRAP BOOM SUPPORT 39 FT 5.00	195460			
R107		LINK BOOM STRAP	195984			
R108						
R109		PIN COTTER 3/16 DIA X 1.50 LG	562085			
R110		PIN COTTER 3/8 DIA X 6.00 LG	562158			
R111						

1 BUTT 9.14M I.D. TAG #80132463.

2 TOP 12.19M I.D. TAG #80132557.

3 INSERT 3.05M I.D. #A01019 OR #B1019327.

4 INSERT 6.10M I.D. TAG #195455.

5 INSERT 12.19M I.D.TAG #195456.

6 INSERT 12.18M W/BACKSTAY LUG I.D. TAG #195457.

7 UPPER POINT ASSY I.D. TAG 174208.

8 OPTIONAL WIRE ROPE GUIDE ITEM R13 (80137121) ON INSERT ASSY ITEM 100 (A01018) REQUIRED FOR DRUM 3 ITEM R6 (80127911) USE.
SEE DELTA NOTES 11 AND 18.

9 IF BOOM IS OPERATED WITHOUT FIXED JIB THE 12.19M (40FT) INSERT W/O BACKSTAY LUGS ITEM 103 (195464) CAN BE USED IN PLACE OF 12.19M (40FT) INSERT W/BACKSTAY LUGS ITEM 104 (195465)

10 SEE BLOCK REEVING DRAWING 80141739 FOR RIGGING CONFIGURATION OPTIONS AND INSTRUCTIONS. B1

11 IF USING WIRE ROPE GUIDE 196189 WITH 10FT INSERT ITEM 100 (A01018) 2 SPACERS ITEM R14 (80137122) ARE REQUIRED. B2
SEE VIEW K-K ON SHEET 5.

ASSEMBLIES USED ON
80129049

REVISIONS
09-26-23 RHV
B1 ADDED DELTA NOTE 25 (SHT 1)
B2 ADDED DELTA NOTE 26 (SHT 1)
B3B4 ADDED DELTA SYMBOLS 25 & 26 (SHT 2)
B5B6 ADDED DELTA SYMBOLS 25 & 26 (SHT 3)
B7 DETAIL J UPDATED TO INCLUDE R11 OR R10 (SHT 5)
B8 ITEM 400 WAS 192323 (B/M)

DWG. NO.
80137888
SHT 1 OF 11

PRIVATE LABELING REQUIREMENT TO CONFORM TO ENGINEERING SPECIFICATION 6B0810794 FOR COMPONENTS LISTED IN 6D5500-05-C05

DATE
03-16-23
REV. LTR.
B
DWG. NO.
80137888

REFERENCE ONLY!

THIS PRINT REMAINS THE PROPERTY OF MANITOWOC CRANES, INC. ALL INFORMATION CONTAINED THEREIN IS CONFIDENTIAL. IT IS LOANED, SUBJECT TO RETURN UPON DEMAND, AND IN EXPIRED CONDITION THAT IT IS NOT TO BE COPIED OR USED DIRECTLY OR INDIRECTLY IN ANY WAY WHATSOEVER DETRIMENTAL TO OUR INTERESTS.

TOLERANCE UNLESS OTHERWISE SPECIFIED

DECIMAL PLACES	FABRICATION ± 10 FEET	FABRICATION ± 10 FEET	MACHINING
(1) PLACE 0.0	±.19	±.18	±.03
(2) PLACE 0.00	±.06	±.12	±.015
(3) PLACE 0.000			±.005
ANGLES	±1°30'		±0°30'

MACHINE TOLERANCE TO BE WITHIN DRAWING LIMITS

.017

Manitowoc Cranes, Inc.
Manitowoc, Wisconsin

DR. RHV
CK. TJA
MODEL MLC250
APP. JRR

BOOM RIGGING
B10:82A

DWG. NO.
80137888

SHT 1 OF 11

DO NOT SCALE THIS DRAWING

B1B2

ITEMS REQ'D FOR VARIOUS BOOM LENGTHS - SEE SHEETS 3, 4, 5, 6, 7 & 8 FOR BOOM MAKE-UP

ITEM NO.		#82 INSERTS (18)(19)(20)				CONNECTOR PINS		STRAPS			LINKS	LINK/STRAP CONNECTION				MAST
		100 (25) B3	102 (26) B4	103 (9)	104 (12)	R100	R110	R104	R105	R106	R107	R101	R102	R103	R109	R23
BOOM LENGTH		INSERT 3.05M (10FT) ASSY	INSERT 6.10M (20FT) ASSY	INSERT 12.19M (40FT) ASSY	INSERT 12.19M (40FT)ASSY W/BSTAY	PIN TAPERED 2 HOLES	COTTER	STRAP 2.87M (9.4FT)	STRAP 5.9M (19.4FT)	STRAP 12.0M (39.4FT)	LINK 174.6mm (6.9in)	COLLAR	PIN W/HEAD	PIN CLEVIS	COTTER	LINK ADJUST POSITION (16)
METERS	FEET															
21.3	70	0	0	0	0	2	4	0	0	0	0	6	6	6	20	A
24.4	80	1	0	0	0	4	8	2	0	0	4	10	10	10	28	A
27.4	90	2 OR	0	0	0	6	12	4	0	0	8	14	14	14	36	A
		0	1	0	0	4	8	0	2	0	4	10	10	10	28	
30.5	100	1	1	0	0	6	12	2	2	0	8	14	14	14	36	A
33.5	110	2 OR	1	0	0	8	16	4	2	0	12	18	18	18	44	A
		0 OR	2	0	0	6	16	0	4	0	8	14	14	14	36	
		0	0	0	1	4	8	0	0	2	4	10	10	10	28	
36.6	120	1 OR	2	0	0	8	16	2	4	0	12	18	18	18	44	A
		1	0	0	1	6	12	2	0	2	8	14	14	14	36	
39.6	130	2 OR	0	0	1	8	16	4	0	2	12	18	18	18	44	A
		0	1	0	1	6	12	0	2	2	8	14	14	14	36	
42.7	140	1	1	0	1	8	16	2	2	2	12	18	18	18	44	A
45.7	150	2 OR	1	0	1	10	20	4	2	2	16	22	22	22	52	A
		0 OR	2	0	1	8	16	0	4	2	12	18	18	18	44	
		0	0	1	1	6	12	0	0	4	8	14	14	14	36	
48.8	160	1 OR	2	0	1	10	20	2	4	2	16	22	22	22	52	A
		1	0	1	1	8	16	2	0	4	12	18	18	18	44	
51.8	170	2 OR	0	1	1	10	20	4	0	4	16	22	22	22	52	A
		0	1	1	1	8	16	0	2	4	12	18	18	18	44	
54.9	180	1	1	1	1	10	20	2	2	4	16	22	22	22	52	A
57.9	190	2 OR	1	1	1	12	24	4	2	4	20	26	26	26	60	B
		0 OR	2	1	1	10	20	0	4	4	16	22	22	22	52	
		0	0	2	1	8	16	0	0	6	12	18	18	18	44	
61.0	200	1 OR	2	1	1	12	24	2	4	4	20	26	26	26	60	B
		1	0	2	1	10	20	2	0	6	16	22	22	22	52	
64.0	210	2. OR	0	2	1	12	24	4	0	6	20	26	26	26	60	B
		0	1	2	1	10	20	0	2	6	16	22	22	22	52	
67.1	220	1	1	2	1	12	24	2	2	6	20	26	26	26	60	B
70.1	230	2 OR	1	2	1	14	28	4	2	6	24	30	30	30	68	B
		0 OR	2	2	1	12	24	0	4	6	20	26	26	26	60	
		0	0	3	1	10	20	0	0	8	16	22	22	22	52	
73.2	240	1 OR	2	2	1	14	28	2	4	6	24	30	30	30	68	B
		1	0	3	1	12	24	2	0	8	20	26	26	26	60	
76.2	250	2 OR	0	3	1	14	28	4	0	8	24	30	30	30	68	B
		0	1	3	1	12	24	0	2	8	20	26	26	26	60	
79.2	260	1	1	3	1	14	28	2	2	8	24	30	30	30	68	B
82.3	270	2 OR	1	3	1	16	32	4	2	8	28	34	34	34	76	B
		0 OR	2	3	1	14	28	0	4	8	24	30	30	30	68	
		0	0	4	1	12	24	0	0	10	20	26	26	26	60	
85.3	280	1 OR	2	3	1	16	32	2	4	8	28	34	34	34	76	B
		1	0	4	1	14	28	2	0	10	24	30	30	30	68	
88.4	290	2 OR	0	4	1	16	32	4	0	10	28	34	34	34	76	B
		0	1	4	1	14	28	0	2	10	24	30	30	30	68	

BOOM HANDLING WITH MAST
WITH MAST STRAPS PINNED TO ROPE GUIDE LINKS:
MAXIMUM BOOM THAT CAN BE CANTILEVERED IS AS FOLLOWS:

LENGTH	3.05M (10FT) INSERT A01018	6.10M (20FT) INSERT 195463	12.19M (40FT) INSERT 195464 OR 195465
3.05M (10FT)	1	0	0
6.10M (20FT)	2	0	0
	0	1	
9.15M (30FT)	1	1	0
12.19M (40FT)	2	1	0
	0	2	0
	0	0	1
15.24M (50FT)	1	2	0
	1	0	1
18.30M (60FT)	2	0	1
	0	1	
21.34M (70FT)	1	1	1
24.38M (80FT)	2	1	1
	0	2	1
	0	0	2

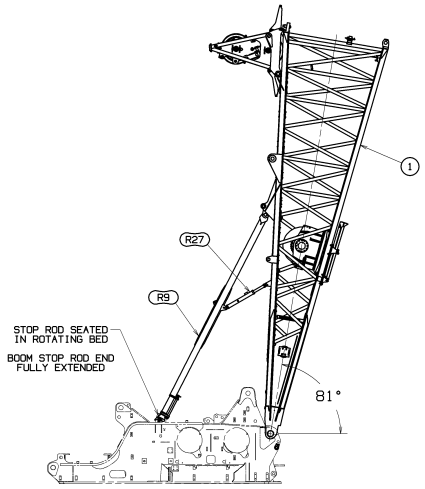

BOOM STOP
START OF CUSHION
SCALE 0.025

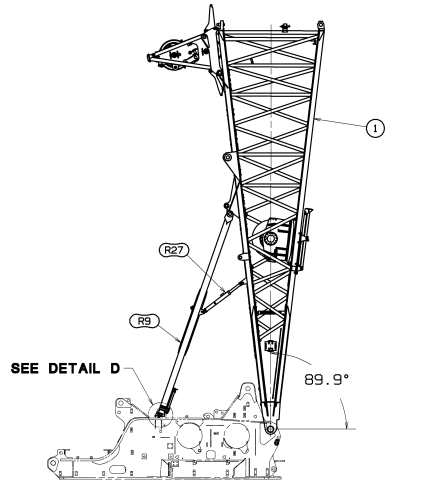

BOOM STOP
PHYSICAL STOP
SCALE 0.025

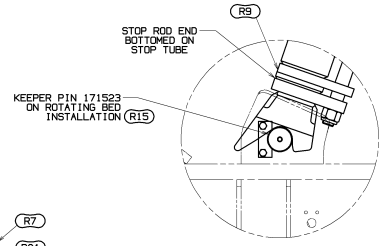

DETAIL D
SCALE 0.200

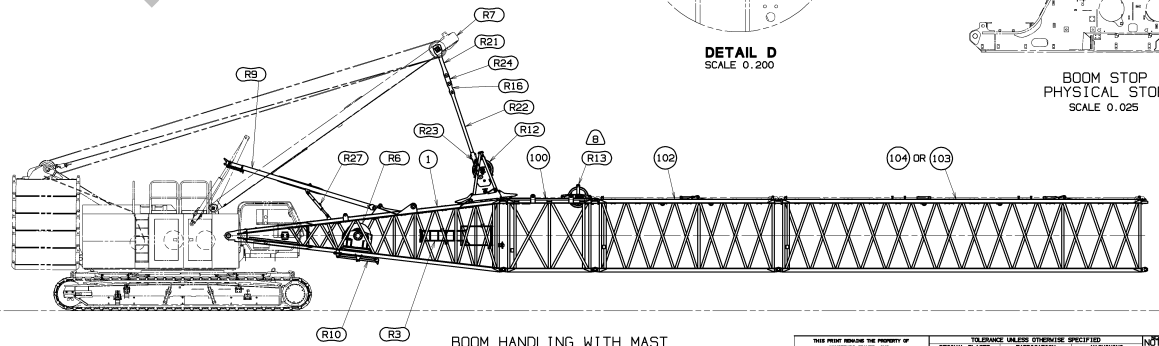

BOOM HANDLING WITH MAST
SCALE 0.017

REFERENCE ONLY!

BILL OF MATERIAL

ITEM NO.	NO. REQ'D	DESCRIPTION	MATERIAL	MATERIAL	ASSEMBLIES USED ON

REVISIONS

ENG. NO. 80137888
SHT 2 OF 11

PRIVATE LABELING REQUIREMENT TO CONFORM TO ENGINEERING SPECIFICATION 6909105794 FOR COMPONENTS LISTED IN 60500-05-035

DATE 03-16-23
REV. LTR. B

80137888
SHT 2 OF 11

THIS PRINT REMAINS THE PROPERTY OF MANITOWOC CRANES, INC. ALL INFORMATION CONTAINED THEREIN IS CONFIDENTIAL. IT IS LOANED, SUBJECT TO RETURN UPON DEMAND, AND IN EXPRESS CONDITION THAT IT IS NOT TO BE COPIED OR USED DIRECTLY OR INDIRECTLY IN ANY WAY WHATSOever DETRIMENTAL TO OUR INTERESTS.

TOLERANCE UNLESS OTHERWISE SPECIFIED

DECIMAL PLACES	FABRICATION ≤ 10 FEET	FABRICATION > 10 FEET	MACHINING
(1) PLACE 0.0	±.19	±.19	±.03
(2) PLACE 0.00	±.06	±.12	±.015
(3) PLACE 0.000			±.005
ANGLES	±1°30'		±0°30'

MACHINING TOLERANCE TO BE WITHIN DIMENSIONAL ALLOWANCE

NOTED
DR. RHV
CK. TJA
APP. JRR

Manitowoc Cranes, Inc.
Manitowoc, Wisconsin

MODEL MLC250

BOOM RIGGING
B10:82A

DWG. NO. 80137888

DO NOT SCALE THIS DRAWING

BILL OF MATERIAL					
ITEM NO. / NO. REQ'D / ITEM	DESCRIPTION	SPECIFICATION	MATERIAL	CODE NO. OR DWG. NO.	

ASSEMBLIES USED ON

REVISIONS

21.3 M BOOM (70.0 FT)

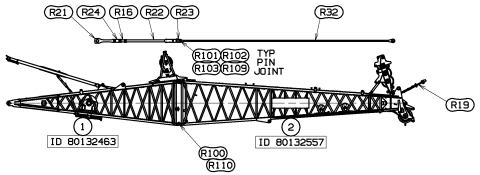

24.4 M BOOM (80.0 FT)

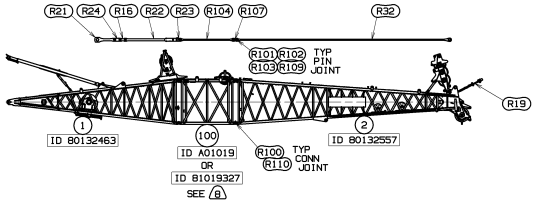

27.4 M BOOM (90.0 FT)

B5 SEE 25

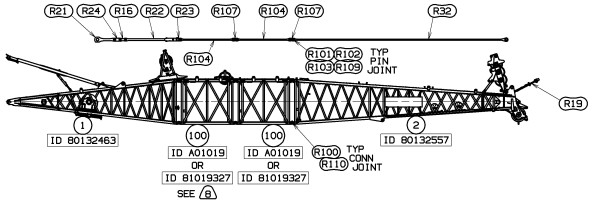

27.4 M BOOM (90.0 FT)

B6 SEE 26

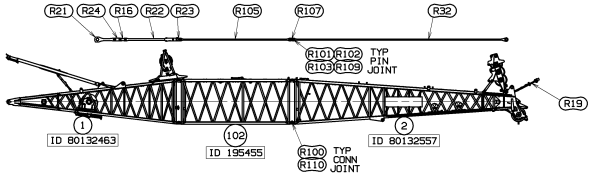

30.5 M BOOM (100.0 FT)

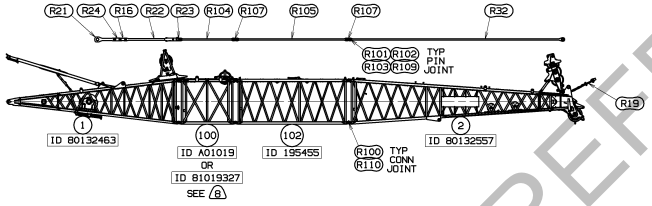

33.5 M BOOM (110.0 FT)

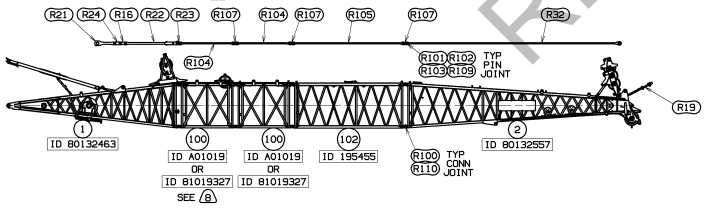

33.5 M BOOM (110.0 FT)

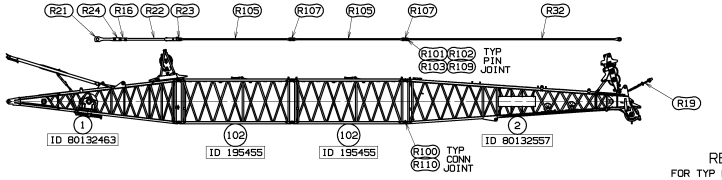

45.7 M BOOM (150.0 FT)

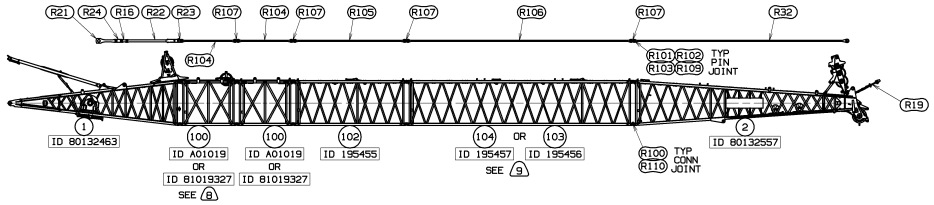

42.7 M BOOM (140.0 FT)

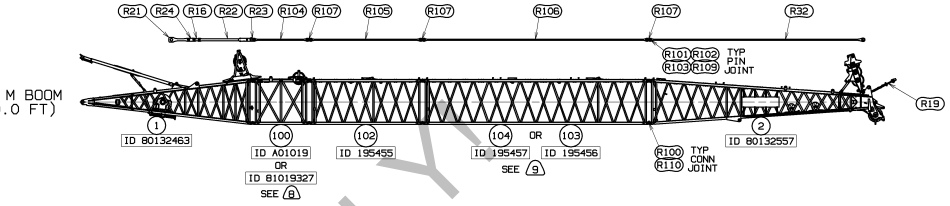

39.6 M BOOM (130.0 FT)

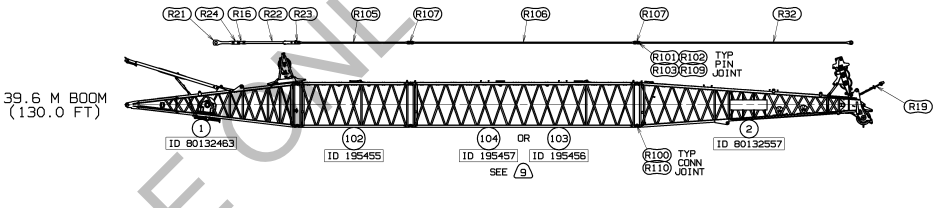

39.6 M BOOM (130.0 FT)

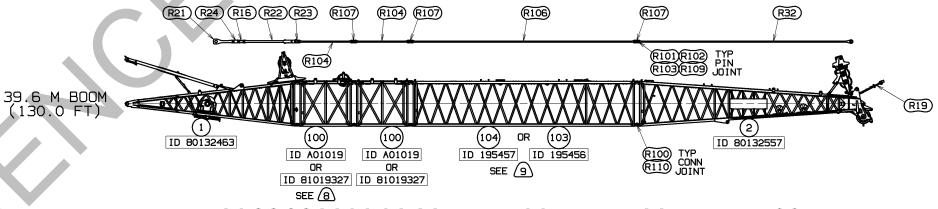

36.6 M BOOM (120.0 FT)

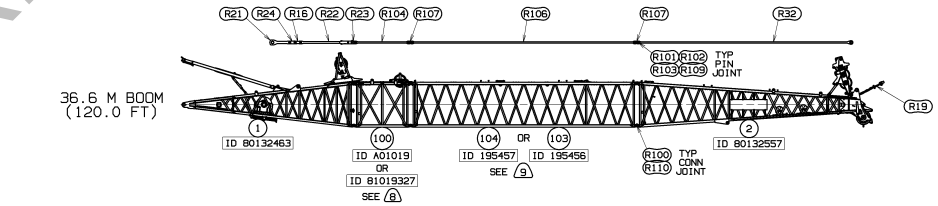

36.6 M BOOM (120.0 FT)

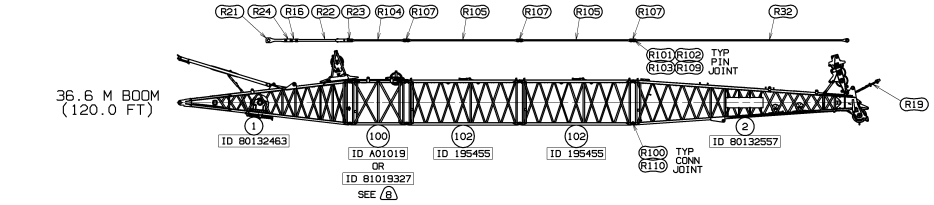

33.5 M BOOM (110.0 FT)

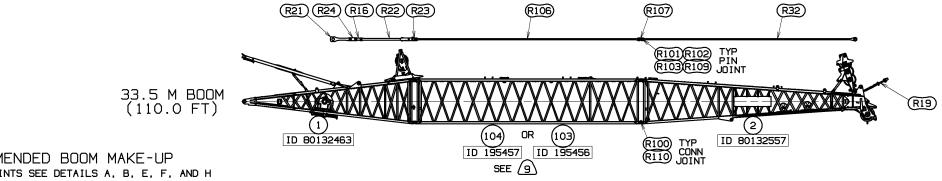

RECOMMENDED BOOM MAKE-UP

FOR TYP PIN JOINTS SEE DETAILS A, B, E, F, AND H

REFERENCE ONLY

THIS PRINT REMAINS THE PROPERTY OF MANITOWOC CRANES, INC. ALL INFORMATION CONTAINED THEREIN IS CONFIDENTIAL. IT IS LOANED, SUBJECT TO RETURN UPON DEMAND, AND IN EXPRESS CONDITION THAT IT IS NOT TO BE COPIED OR USED DIRECTLY OR INDIRECTLY IN ANY WAY DETRIMENTAL TO OUR INTERESTS.

TOLERANCE UNLESS OTHERWISE SPECIFIED			
DECIMAL PLACES	FABRICATION		MACHINING
	≤ 10 FEET	> 10 FEET	
(1) PLACE 0.0	±.12	±.18	±.03
(2) PLACE 0.00	±.06	±.12	±.015
(3) PLACE 0.000			±.005
ANGLES	±1°30'		±0°30'

MACHINE FINISH TOLERANCE ±.005 IN THE DIRECTION OF MATERIAL REMOVAL

DATE 011	Manitowoc Cranes, Inc. Manitowoc, Wisconsin		
DR. RHV		BOOM RIGGING	
CK. TJA	MODEL MLC250	B10:82A	
APP. JRR			

PRIVATE LABELING REQUIREMENT TO CONFORM TO ENGINEERING SPECIFICATION 6909105794 FOR COMPONENTS LISTED IN 60S900-05-C05

DATE 03-16-23

REV. LTR. B

DWG. NO. 80137888

SHT 3 OF 11

DWG. NO. 80137888

SHT 3 OF 11

DO NOT SCALE THIS DRAWING

BILL OF MATERIAL					
ITEM NO. / NO. REQ'D	DESCRIPTION	PART NO.	MATERIAL	CODE NO. OR DWG. NO.	ASSEMBLIES USED ON

REVISIONS

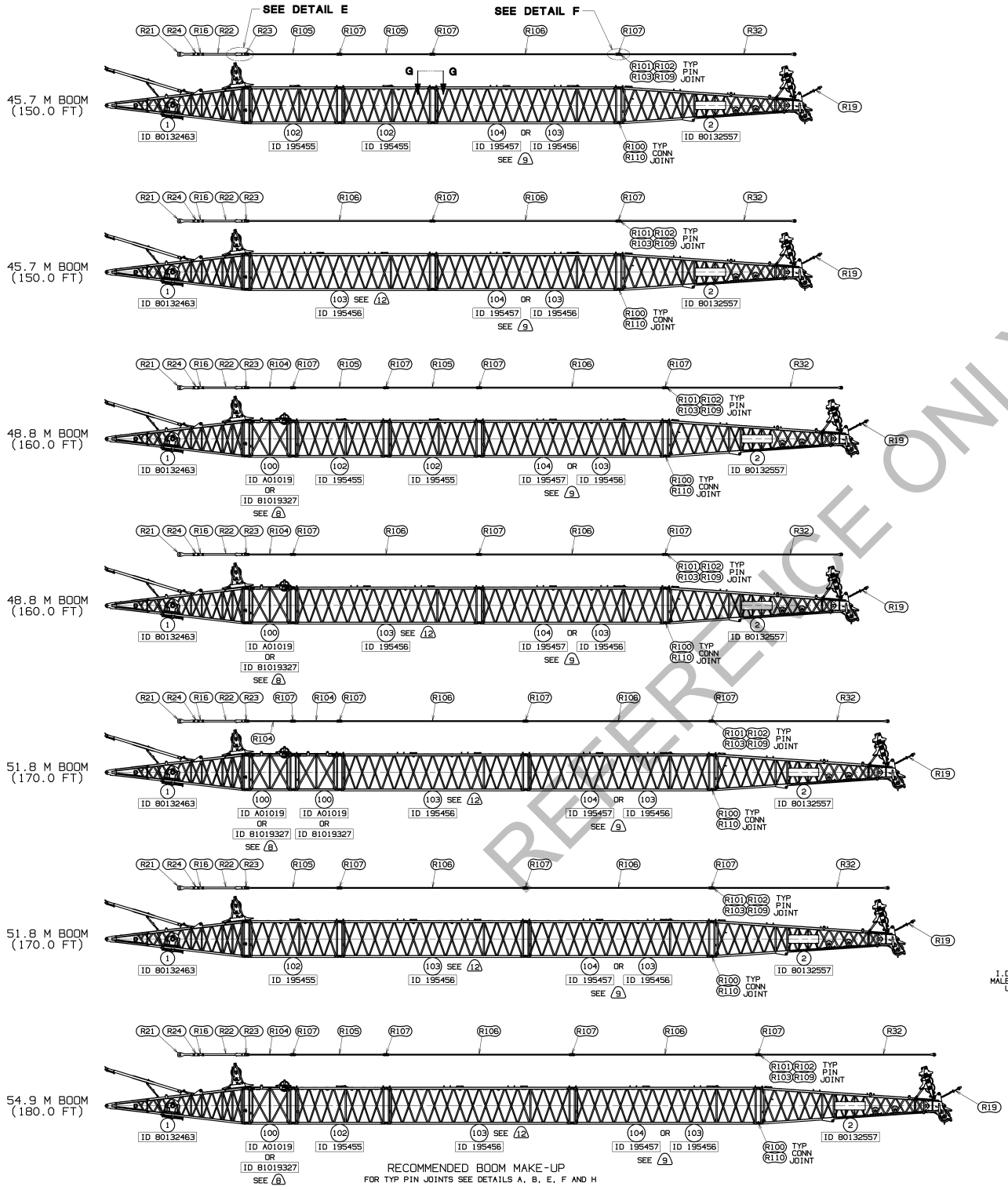

RECOMMENDED BOOM MAKE-UP
FOR TYP PIN JOINTS SEE DETAILS A, B, E, F AND H

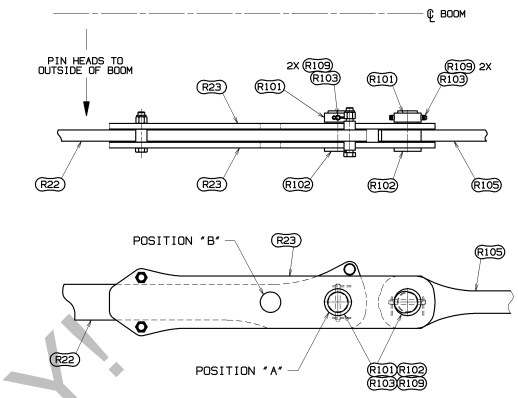

DETAIL E
STRAP ITEM R22 (80146247) ATTACHED TO POSITION "A" OF STRAP MAST ADJUST ITEM R23 (80146248)
SCALE 0.200

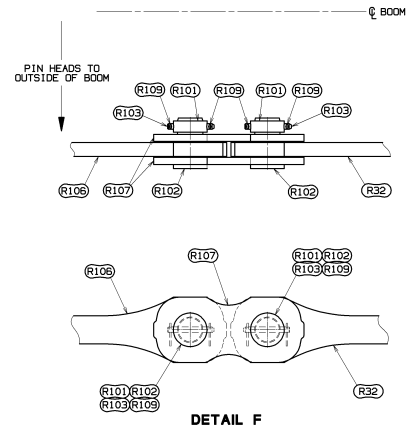

DETAIL F
SCALE 0.250

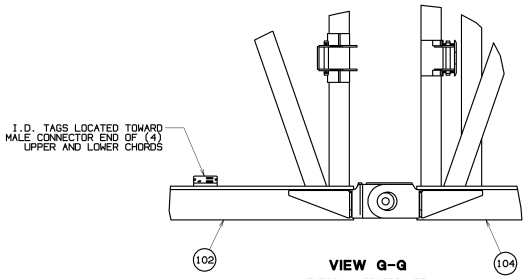

VIEW Q-Q
TYPICAL LOCATION OF INSERT IDENTIFICATION TAGS
SCALE 0.150

REFERENCE ONLY!

THIS PRINT REMAINS THE PROPERTY OF MANITOWOC CRANES, INC. ALL INFORMATION CONTAINED THEREIN IS CONFIDENTIAL. IT IS LOANED, SUBJECT TO RETURN UPON DEMAND, AND IN EXPRESS CONDITION THAT IT IS NOT TO BE COPIED OR USED DIRECTLY OR INDIRECTLY IN ANY WAY WHATSOever DETRIMENTAL TO OUR INTERESTS.

TOLERANCE UNLESS OTHERWISE SPECIFIED

	FABRICATION		MACHINING
DECIMAL PLACES	≤ 10 FEET	> 10 FEET	
(1) PLACE 0.0	±.19	±.19	±.03
(2) PLACE 0.00	±.06	±.12	±.015
(3) PLACE 0.000		±.12	±.005
ANGLES	±1°30'		±0°30'

MACHINE FINISH TOLERANCE TO BE WITHIN MACHINE MANUFACTURER'S ACCEPTED PRACTICE

SCALE 011	Manitowoc Cranes, Inc. Manitowoc, Wisconsin		
DR. RHV		BOOM RIGGING	
CK. TJA	MODEL MLC250	B10:82A	
APP. JRR			

DWG. NO. 80137888
SHT 4 OF 11

PRIVATE LABELING REQUIREMENT TO CONFORM TO ENGINEERING SPECIFICATION 6909105794 FOR COMPONENTS LISTED IN 60500-05-005

DATE 03-16-23
REV. LTR. B

DWG. NO. 80137888
SHT 4 OF 11

DO NOT SCALE THIS DRAWING

BILL OF MATERIAL				
ITEM NO. / NO. REQ'D	DESCRIPTION	CATALOG NO.	MATERIAL	CODE NO. OR DWG. NO.

ASSEMBLIES USED ON

REVISIONS

SEE DETAIL H

57.9 M BOOM (190.0 FT)

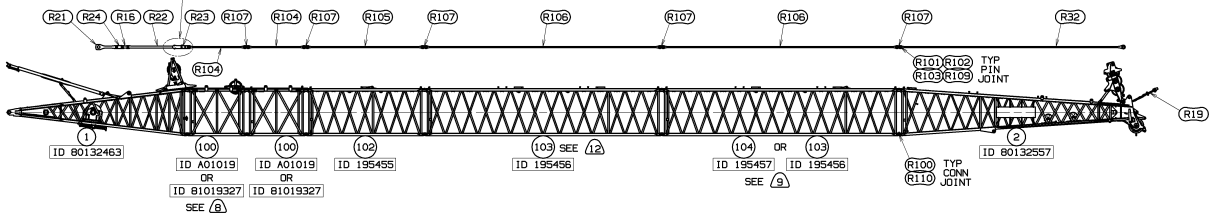

57.9 M BOOM (190.0 FT)

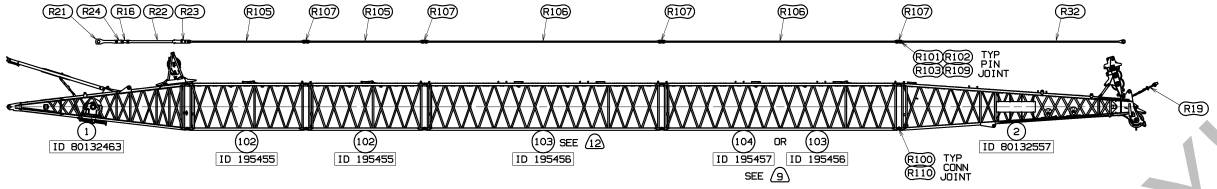

57.9 M BOOM (190.0 FT)

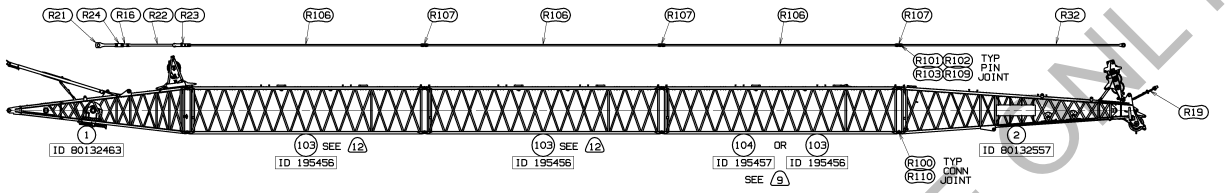

61.0 M BOOM (200.0 FT)

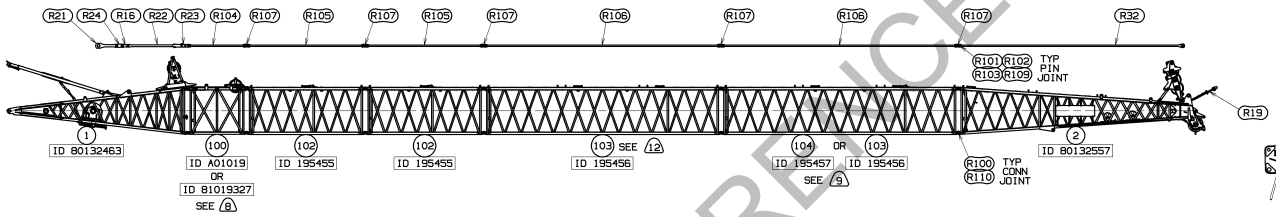

61.0 M BOOM (200.0 FT)

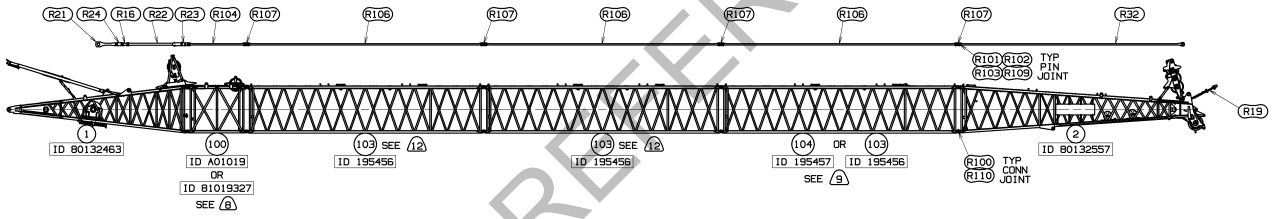

64.0 M BOOM (210.0 FT)

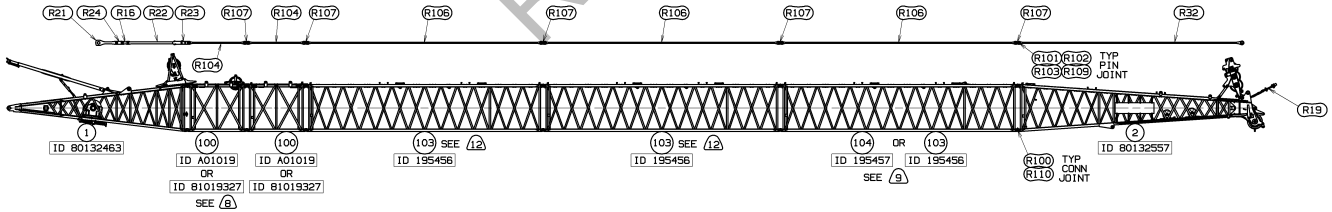

64.0 M BOOM (210.0 FT)

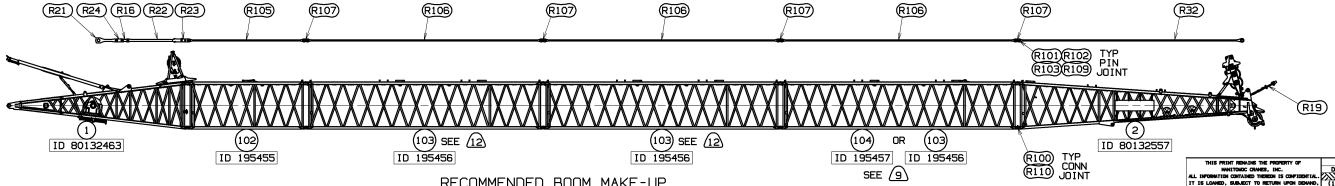

RECOMMENDED BOOM MAKE-UP
FOR TYP PIN JOINTS SEE DETAILS A, B, E, F AND H

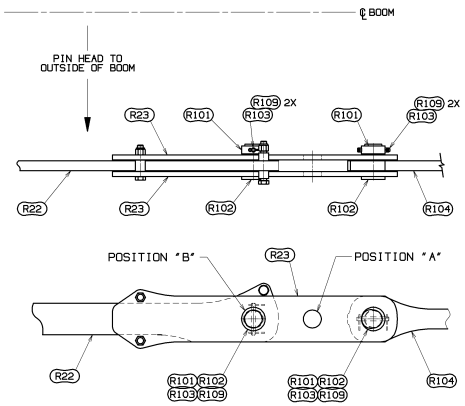

DETAIL H
STRAP ITEM R22 (80146247) ATTACHED TO POSITION "B" OF STRAP MAST ADJUST ITEM R23 (80146248)
SCALE 0.175

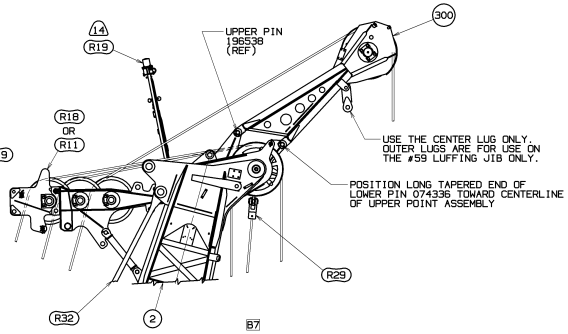

B7

DETAIL J
2ND DEAD END ARRANGEMENT (OPTION 3 ON PARTS BOX ASSY 80137468)
REFER TO 80140716 FOR A 2ND DEAD END ASSY AND SHEAVE CONFIGURATION.
(FROM SHEET 1)
SCALE 0.040

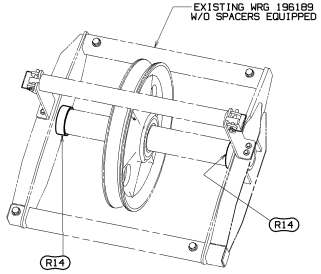

VIEW K-K (ISO)
IF USING AN EXISTING WIRE ROPE GUIDE 196189 W/O SPACERS, 2 SPACERS (R14) ARE REQUIRED
(FROM SHEET 1)
SCALE 0.125

REFERENCE ONLY!

THIS PRINT REMAINS THE PROPERTY OF MANITOWOC CRANES, INC. ALL INFORMATION CONTAINED THEREIN IS CONFIDENTIAL. IT IS LOANED, SUBJECT TO RETURN UPON DEMAND, AND IN EXPRESS CONDITION THAT IT IS NOT TO BE COPIED OR USED DIRECTLY OR INDIRECTLY IN ANY WAY WHATSOever DETRIMENTAL TO OUR INTERESTS.

TOLERANCE UNLESS OTHERWISE SPECIFIED			
DECIMAL PLACES	FABRICATION		MACHINING
	≤ 10 FEET	> 10 FEET	
(1) PLACE 0.0	±.19	±.19	±.03
(2) PLACE 0.00	±.06	±.12	±.015
(3) PLACE 0.000			±.005
ANGLES	±1°30'		±0°30'

MACHINE TOLERANCE ±.005 UNLESS OTHERWISE SPECIFIED

DATE 011	Manitowoc Cranes, Inc. Manitowoc, Wisconsin	
DR. RHV		BOOM RIGGING
CK. TJA	MODEL MLC250	B10:82A
APP. JRR		

DWG. NO. 80137888
SHT 5 OF 11

PRIVATE LABELING REQUIREMENT TO CONFORM TO ENGINEERING SPECIFICATION 6609105794 FOR COMPONENTS LISTED IN 60500-05-035

DATE 03-16-23
REV. LTR. B

DWG. NO. 80137888
SHT 5 OF 11

DO NOT SCALE THIS DRAWING

B7

BILL OF MATERIAL					
ITEM NO. / NO. REQ'D	DESCRIPTION	SECTION NO.	MATERIAL	CODE NO. OR DWG. NO.	ASSEMBLIES USED ON

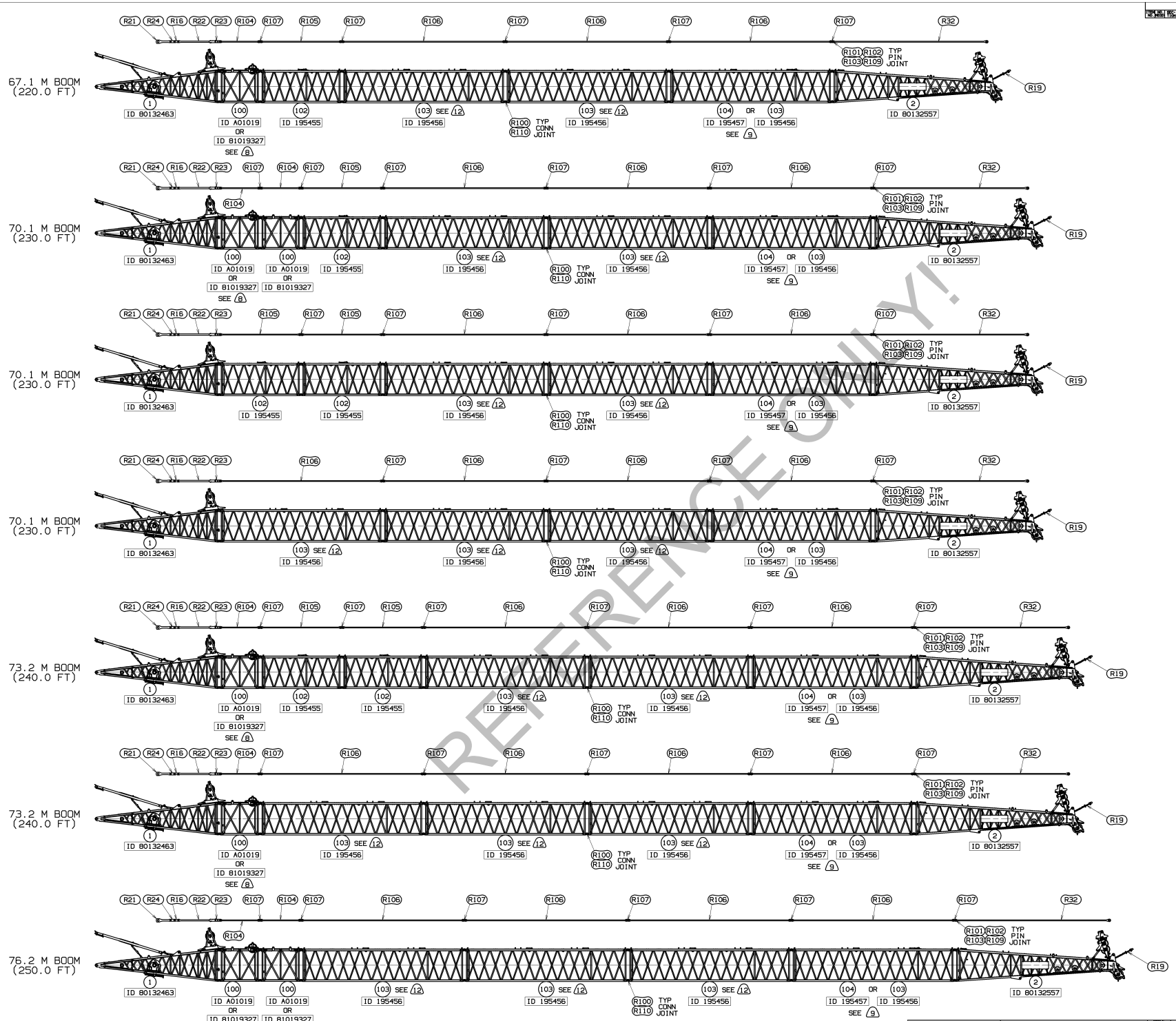

RECOMMENDED BOOM MAKE-UP
FOR TYP PIN JOINTS SEE DETAILS A, B, E, F AND H

REFERENCE ONLY!

THIS PRINT REMAINS THE PROPERTY OF MANITOWOC CRANES, INC. ALL INFORMATION CONTAINED THEREIN IS CONFIDENTIAL. IT IS LOANED, SUBJECT TO RETURN UPON DEMAND, AND IN EXPRESS CONDITION THAT IT IS NOT TO BE COPIED OR USED DIRECTLY OR INDIRECTLY IN ANY WAY DETRIMENTAL TO OUR INTERESTS.

TOLERANCE UNLESS OTHERWISE SPECIFIED

DECIMAL PLACES	FABRICATION	MACHINING
	≤ 10 FEET	> 10 FEET		
(1) PLACE 0.0	±.19	±.19	±.03	
(2) PLACE 0.00	±.06	±.12	±.015	
(3) PLACE 0.000			±.005	
ANGLES	±1°30'		±0°30'	

DO NOT SCALE THIS DRAWING

SCALE 011	Manitowoc Cranes, Inc. Manitowoc, Wisconsin	
DR. RHV		BOOM RIGGING
CK. TJA	MODEL MLC250	B10:82A
APP. JRR		

DWG. NO. 80137888
SHT 6 OF 11

ASSEMBLIES USED ON

REVISIONS

PRIVATE LABELING REQUIREMENT TO CONFORM TO ENGINEERING SPECIFICATION 6909105794 FOR COMPONENTS LISTED IN 60500-05-C05

DATE 03-16-23

REV. LTR. B

DWG. NO. 80137888

SHT 6 OF 11

BILL OF MATERIAL					
ITEM NO. / NO. REQ'D	DESCRIPTION	PART NO.	MATERIAL	ZONE NO. OR DWG. NO	ASSEMBLIES USED ON

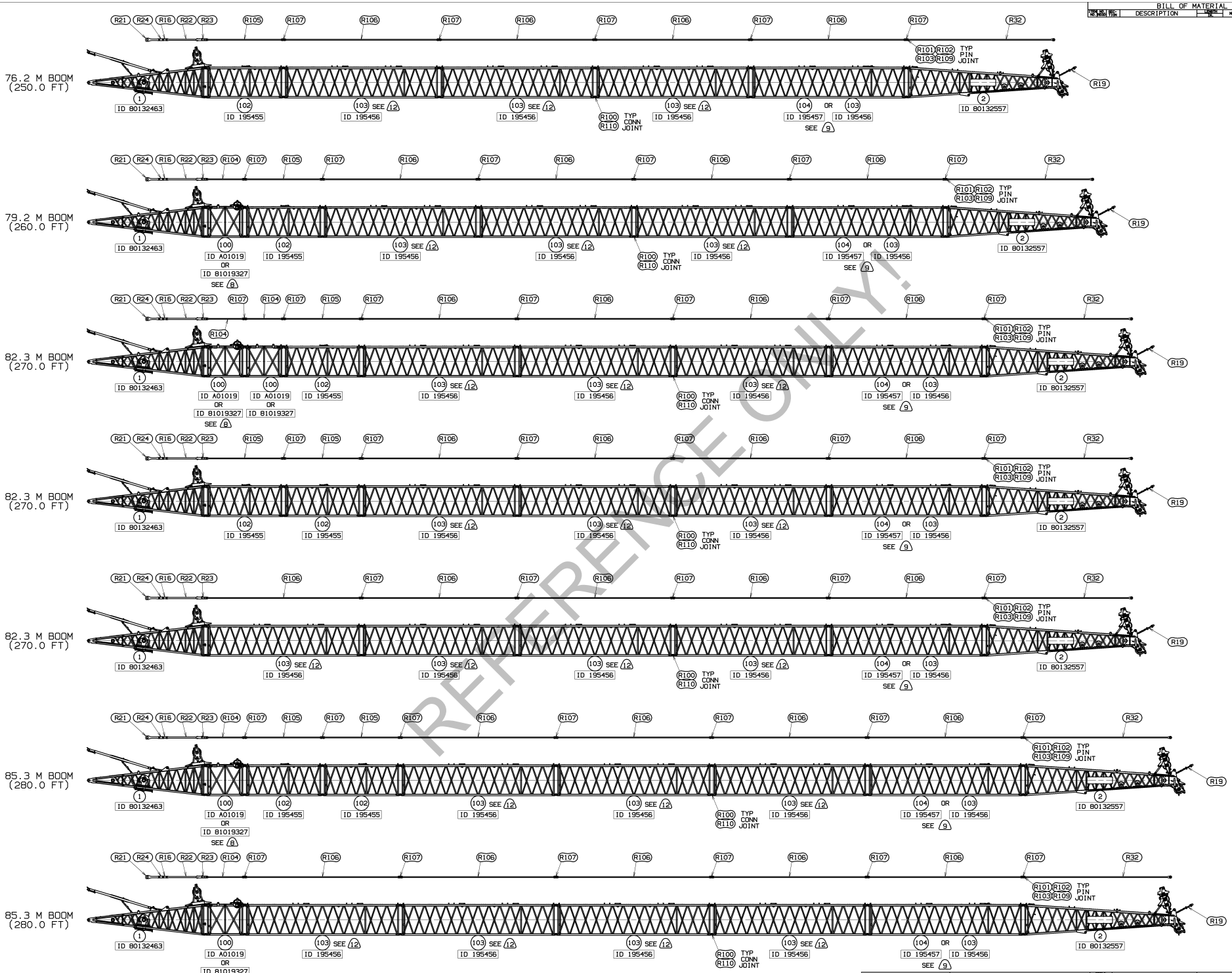

RECOMMENDED BOOM MAKE-UP

FOR TYP PIN JOINTS SEE DETAILS A, B, E, F AND H

REFERENCE ONLY!

THIS PRINT REMAINS THE PROPERTY OF MANITOWOC CRANES, INC. ALL INFORMATION CONTAINED THEREIN IS CONFIDENTIAL. IT IS LOANED, SUBJECT TO RETURN UPON DEMAND, AND IN EXPRESS CONDITION THAT IT IS NOT TO BE COPIED OR USED DIRECTLY OR INDIRECTLY IN ANY WAY WHATSOEVER DETRIMENTAL TO OUR INTERESTS.

TOLERANCE UNLESS OTHERWISE SPECIFIED			
DECIMAL PLACES	FABRICATION		MACHINING
	≤ 10 FEET	> 10 FEET	MACHINING TOLERANCE IS THE SAME AS THE FABRICATION TOLERANCE ABOVE
(1) PLACE 0.0	±.12	±.18	±.03
(2) PLACE 0.00	±.06	±.12	±.015
(3) PLACE 0.000			±.005
ANGLES	±1°30'		±0°30'

DO NOT SCALE THIS DRAWING

SCALE 011	Manitowoc Cranes, Inc. Manitowoc, Wisconsin	
DR. RHV		BOOM RIGGING
CK. TJA	MODEL MLC250	B10:82A
APP. JRR		

DWG. NO. 80137888

SHT 7 OF 11

REVISIONS

PRIVATE LABELING REQUIREMENT TO CONFORM TO ENGINEERING SPECIFICATION 6909105794 FOR COMPONENTS LISTED IN 605500-05-C05

DATE 03-16-23

REV. LTR. B

DWG. NO. 80137888

SHT 7 OF 11

BILL OF MATERIAL					
ITEM NO. / NO. REQ'D	SEC. / ITEM	DESCRIPTION	MATERIAL NO.	MATERIAL	CODE NO. OR DWG. NO.

ASSEMBLIES USED ON

REVISIONS

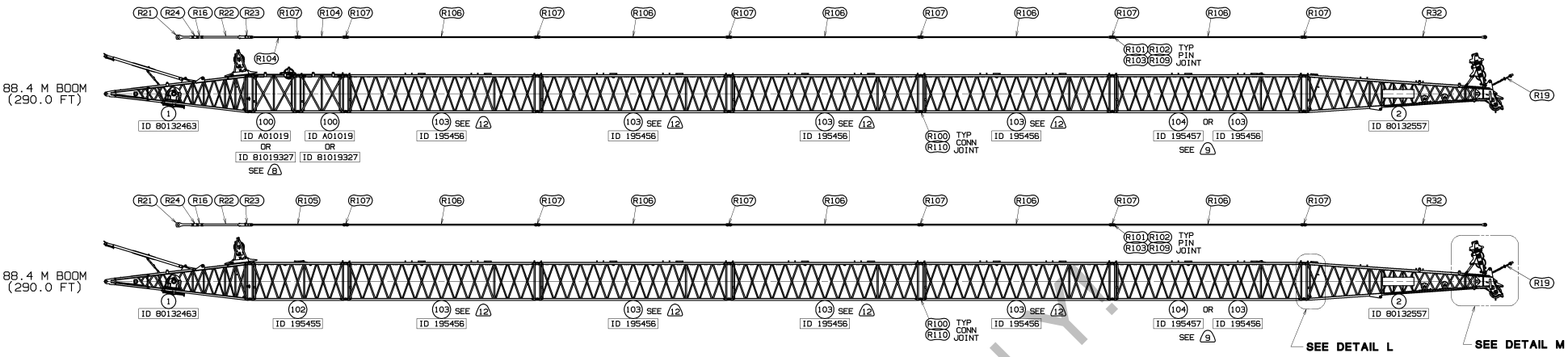

RECOMMENDED BOOM MAKE-UP

FOR TYP PIN JOINTS SEE DETAILS A, B, E, F AND H

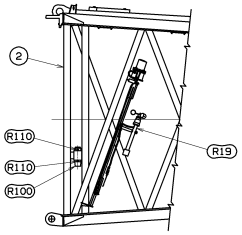

DETAIL L

SHIPPING LOCATION OF ANEMOMETER/LIGHT ITEM R19 AND CONNECTOR PIN ITEM R100

SCALE 0.050

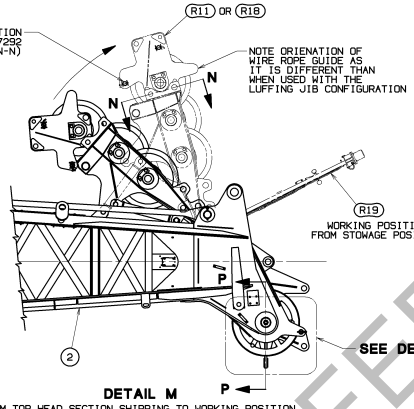

DETAIL M

BOOM TOP HEAD SECTION SHIPPING TO WORKING POSITION

SCALE 0.050

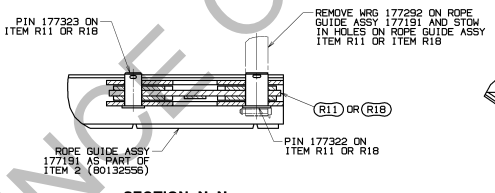

SECTION N-N

SCALE 0.250

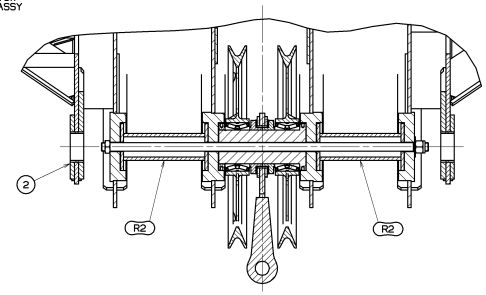

SECTION P-P

2 SHEAVE ARRANGEMENT FOR BOOM LENGTHS 76.2M (250FT) THRU 88.4M (290FT)

SCALE 0.150

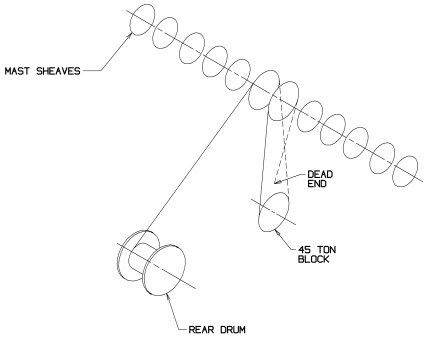

MAST LOAD LINE REEVING DIAGRAM FOR 3 PART LINE

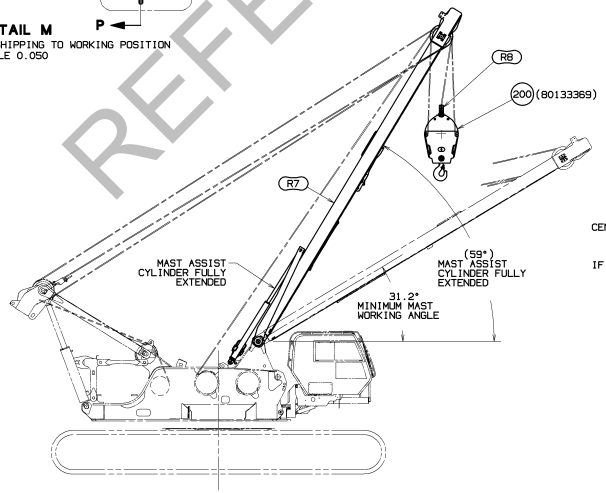

MAST RIGGING ASSY W/AUX BLOCK

WARNING: MAST RAISING CYLINDER IS TO BE FULLY EXTENDED AT ALL TIMES MAST IS USED FOR MAKING LIFTS.

SCALE 0.022

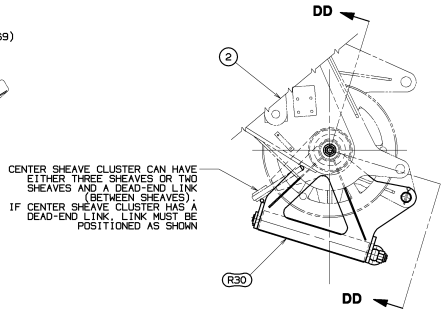

DETAIL CC

SCALE 0.100

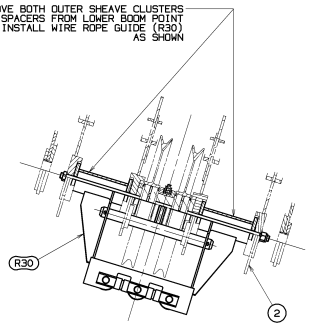

SECTION DD-DD

CENTER SHEAVE CLUSTER AND WIRE ROPE GUIDE FRAME (R30) MUST BE CENTERED IN BOOM POINT. ADD SHIMS TO ALLOW A MAXIMUM OF 0.030 (in) END PLAY

SCALE 0.100

REFERENCE ONLY.

THIS PRINT REMAINS THE PROPERTY OF MANITOWOC CRANES, INC. ALL INFORMATION CONTAINED THEREIN IS CONFIDENTIAL. IT IS LOANED, SUBJECT TO RETURN UPON DEMAND, AND IN EXPRESS CONDITION THAT IT IS NOT TO BE COPIED OR USED DIRECTLY OR INDIRECTLY IN ANY WAY DETRIMENTAL TO OUR INTERESTS.

TOLERANCE UNLESS OTHERWISE SPECIFIED			
DECIMAL PLACES	FABRICATION ≤ 10 FEET	FABRICATION > 10 FEET	MACHINING
(1) PLACE 0.0	±.19	±.19	±.03
(2) PLACE 0.00	±.06	±.12	±.015
(3) PLACE 0.000		±.06	±.005
ANGLES	±1°30'		±0°30'

MACHINING TOLERANCE TO BE WITHIN FABRICATION ALLOWANCE

DRAWN	DJI	Manitowoc Cranes, Inc. Manitowoc, Wisconsin	BOOM RIGGING
DR.	RHV		B10:82A
CK.	TJA	MODEL MLC250	
APP.	JRR		

DO NOT SCALE THIS DRAWING

PRIVATE LABELING REQUIREMENT TO CONFORM TO ENGINEERING SPECIFICATION 6909105794 FOR COMPONENTS LISTED IN 60500-05-035

DATE 03-16-23

REV. LTR. B

DWG. NO. 80137888

SHT 8 OF 11

BILL OF MATERIAL					
ITEM NO.	NO. REQ'D	REV. ITEM	DESCRIPTION	MATERIAL NO.	MATERIAL

ASSEMBLIES USED ON

REVISIONS

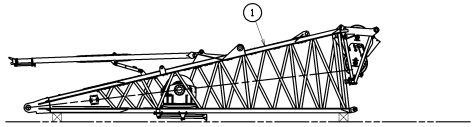

BOOM BUTT SHIPPING CONFIGURATION

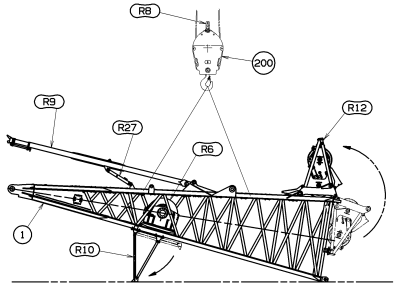

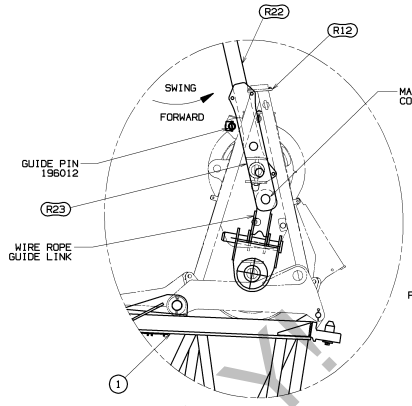

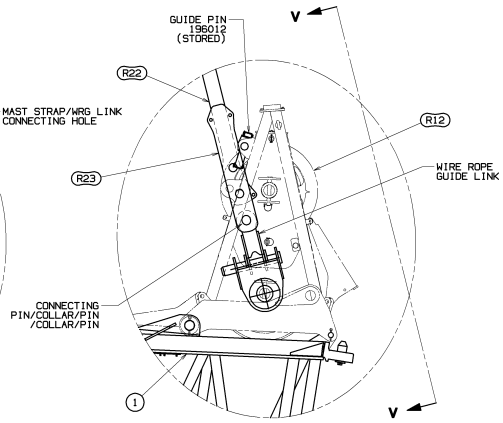

BOOM ASSEMBLY PROCEDURE

(MAST CAN BE USED TO ASSEMBLE ALL RIGGING COMPONENTS)

STEP 1

ASSEMBLE BOOM COMPLETE, WITHOUT BUTT.

ATTACH ROPE GUIDES, STRAPS, LINKS, AND PINS AS REQUIRED.
(SEE TYPICAL STRAP/LINK/PIN JOINTS - DETAIL A & B ON SHEET 1
AND DETAIL F ON SHEET 4).
(SEE BOOM TOP DETAILS L AND M ON SHEET 8).

STEP 2

BOOM BUTT INSTALLATION PREP

USING MAST W/AUX BLOCK OR AN ASSIST CRANE LIFT BOOM BUTT AS SHOWN.
LOWER BOOM BUTT SUPPORT FRAME (R10) TO SUPPORT BOOM BUTT AND
PIN STRUTS TO BOOM BUTT AS SHOWN.
LIFT WIRE ROPE GUIDE ASSY (R12) TO OPERATION POSITION AND PIN.
LOWER PLATFORM TOWARD BUTT HINGE ON WIRE ROPE GUIDE ASSY (R12)
TO WORKING POSITION AND PIN.

DETAIL T
SCALE 0.080

DETAIL U
SCALE 0.080

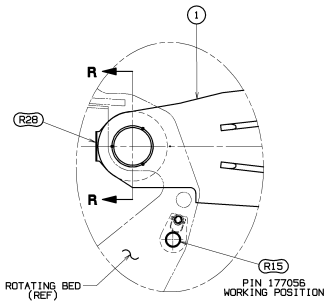

DETAIL Q
BOOM BUTT HINGE PIN INSTALLATION
SCALE 0.167

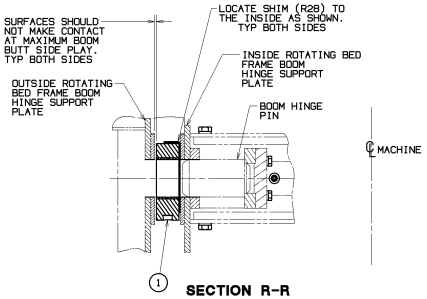

SECTION R-R
SHIM (R28) LOCATION FOR BOOM BUTT INSTALLATION
SCALE 0.167

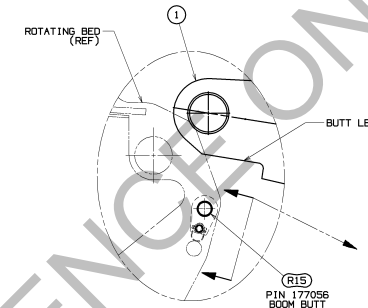

DETAIL S
BOOM BUTT HINGE PIN PREP
SCALE 0.167

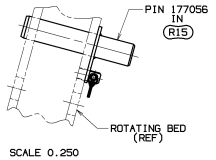

SCALE 0.250

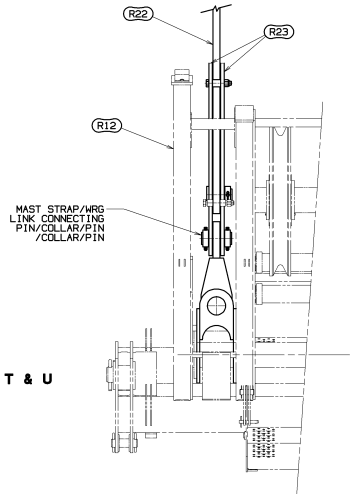

VIEW V
SCALE 0.125

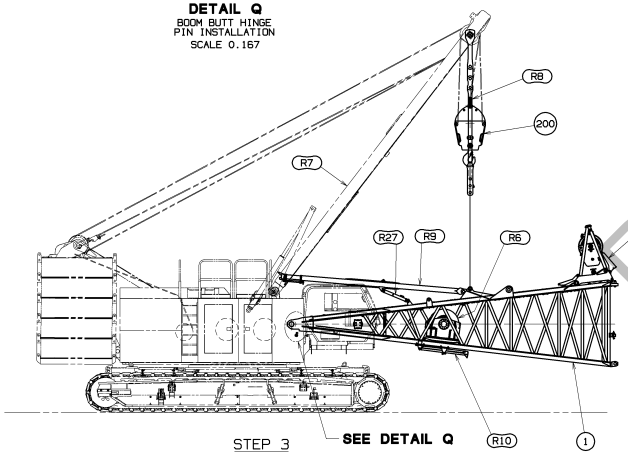

STEP 3

OPTION ATTACHING BOOM BUTT TO ROTATING BED
USING AUXILIARY BLOCK IN MAST

POSITION CRANE IN LINE WITH BOOM BUTT ITEM 1. (BOOM STOPS R9 MUST BE IN SHIPPING (LOWER) POSITIONS).
WITH BOOM HINGE PIN DISENGAGED AND GUIDE PIN 177056 IN BUTT INSTALLATION POSITION. (SEE DETAIL S ON SHEET 9).
LIFT BOOM BUTT ITEM 1 AS SHOWN WITH BUTT LEGS ALIGNED OVER GUIDE PINS 177056. (SEE DETAIL S ON SHEET 9).
USE MAST TO POSITION BOOM BUTT TO ALIGN BUTT HINGE AND ROTATING BED BOOM HINGE PIN. (SEE DETAIL Q ON SHEET 9).
USE SHIMS (R28) AS NEEDED AND ACTIVATE BOOM HINGE PIN. (SEE SECTION R-R ON SHEET 9).
RELOCATE PIN 177056 ON R15 TO WORKING POSITION AS SHOWN IN DETAIL Q ON SHEET 9.

OR

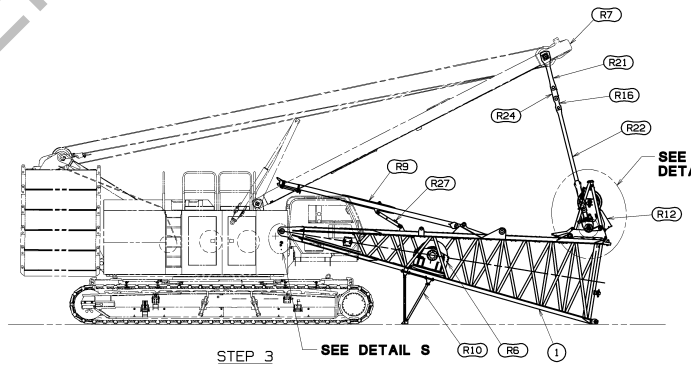

STEP 3

OPTION ATTACHING BOOM BUTT TO ROTATING BED
USING OPTIONAL BOOM BUTT STAND ASSY (R10) AND MAST STRAPS (R22 & R23)

POSITION CRANE IN LINE WITH BOOM BUTT ITEM 1. (BOOM STOPS R9 MUST BE IN SHIPPING (LOWER) POSITIONS).
LOWER MAST UNTIL MAST STRAPS (R22 & R23) ARE NEAR WIRE ROPE GUIDE LINK (R12) ON BOOM BUTT ITEM 1.
SWING MAST STRAPS (R22 & R23) FORWARD AND INSTALL GUIDE PIN 196012. (SEE DETAIL T ON SHEET 9).
LOWER MAST UNTIL CONNECTING HOLES IN MAST STRAPS (R23) LINE UP WITH HOLES IN LINKS ON WIRE ROPE GUIDE (R12).
INSTALL CONNECTING PINS, COLLARS, AND RETAINING PINS. (SEE DETAIL T ON SHEET 9).

REMOVE AND STORE GUIDE PINS 196012. (SEE DETAIL U ON SHEET 9).
CAUTION: STORE GUIDE PINS BEFORE RAISING MAST TO PREVENT DAMAGE TO WIRE ROPE GUIDE AND GUIDE PINS.

WITH BOOM HINGE PIN DISENGAGED AND GUIDE PIN 177056 IN BUTT INSTALLATION POSITION (SEE DETAIL S ON SHEET 9).
TRAVEL CRANE SLOWLY FORWARD UNTIL BUTT LEGS ARE ALIGNED OVER GUIDE PINS 177056.
USE MAST TO POSITION BOOM BUTT TO ALIGN BUTT HINGE AND ROTATING BED BOOM HINGE PIN. (SEE DETAIL Q ON SHEET 9).
USE SHIMS (R28) AS NEEDED AND ACTIVATE BOOM HINGE PIN.
(SEE SECTION R-R ON SHEET 9).

RELOCATE PIN 177056 ON R15 TO WORKING POSITION AS SHOWN IN DETAIL Q ON SHEET 9.

THIS PRINT REMAINS THE PROPERTY OF MANITOWOC CRANES, INC.
ALL INFORMATION CONTAINED THEREIN IS CONFIDENTIAL. IT IS LOANED, SUBJECT TO RETURN UPON DEMAND, AND IN EXPRESS CONDITION THAT IT IS NOT TO BE COPIED OR USED DIRECTLY OR INDIRECTLY IN ANY WAY WHATSOEVER DETRIMENTAL TO OUR INTERESTS.

TOLERANCE UNLESS OTHERWISE SPECIFIED		
DECIMAL PLACES	FABRICATION	MACHINING
	≤ 10 FEET	> 10 FEET
(1) PLACE 0.0	±.19	±.03
(2) PLACE 0.00	±.06	±.015
(3) PLACE 0.000		±.005
ANGLES	±1°30'	±0°30'

MACHINING TOLERANCE TO BE WITHIN FABRICATION ALLOWANCE

SCALE NOT TO SCALE

DR. RHV
CK. TJA
APP. JRR

Manitowoc Cranes, Inc.
Manitowoc, Wisconsin

MODEL MLC250

BOOM RIGGING

B10:82A

DWG. NO. 80137888

SHT 9 OF 11

DWG. NO. 80137888

PRIVATE LABELING REQUIREMENT TO CONFORM TO ENGINEERING SPECIFICATION 6909105794 FOR COMPONENTS LISTED IN 60500-05-035

DATE 03-16-23

REV. LTR. B

REFERENCE ONLY!

DO NOT SCALE THIS DRAWING

SHT 9 OF 11

BILL OF MATERIAL					
ITEM NO. / NO. REQ'D	DESCRIPTION	PART NO.	MATERIAL	CODE NO. OR DWG. NO.	ASSEMBLIES USED ON

REVISIONS

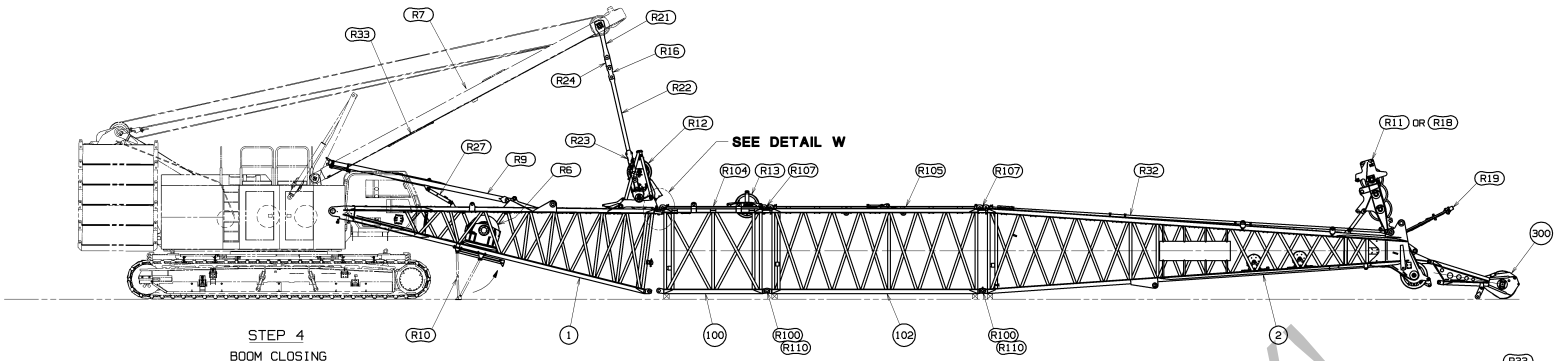

STEP 4
BOOM CLOSING

WITH MAST STRAPS ATTACHED TO WIRE ROPE GUIDE LINKS (R12) ADJUST BOOM BUTT HEIGHT TO MOVE BOOM BUTT SUPPORT FRAME (R10) TO STORAGE POSITION.

WITH THE BOOM INSERTS/TOP ASSEMBLY SUPPORTED ON BLOCKING, POSITION MACHINE TO ALIGN UPPER PIN CONNECTOR PINS ON BOOM BUTT WITH UPPER PIN CONNECTOR HOLES ON FIRST BOOM INSERT AND ENGAGE PINS. (SEE DETAIL W ON SHEET 10).

SLOWLY BOOM UP TO ALIGN LOWER PIN CONNECTOR HOLES ON BOOM BUTT WITH LOWER PIN CONNECTOR HOLES IN FIRST BOOM INSERT AND INSERT TAPERED PINS (R100) AND COTTERS (R110) WITH TAPERED END TOWARD BOOM CENTERLINE. (SEE DETAIL X ON SHEET 10).

CAUTION: DO NOT CONTINUE TO BOOM UP AFTER BOOM CONNECTOR PINS ARE INSTALLED.

LOWER WIRE ROPE GUIDE (R12) PLATFORM AT BUTT/INSERT JOINT.

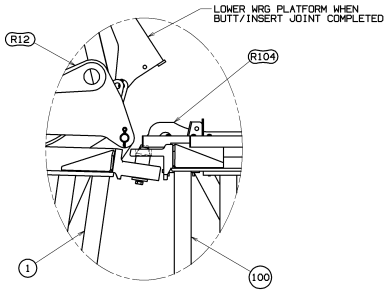

DETAIL W
BOOM BUTT FIXED VERTICAL PIN TO INSERT CONNECTOR
SCALE 0.125

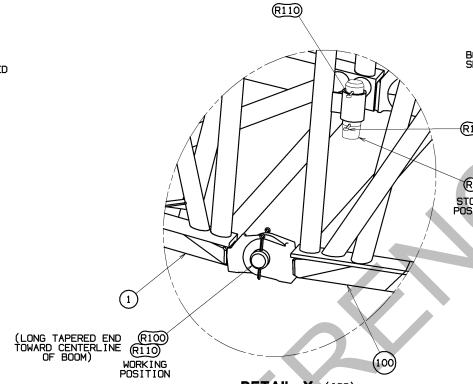

DETAIL X (ISO)
TYPICAL LOWER PIN CONNECTORS
SCALE 0.150

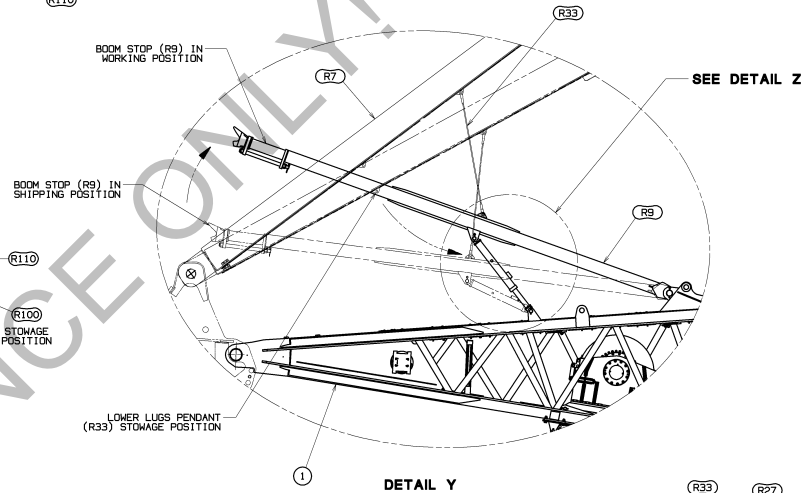

DETAIL Y
SCALE 0.050

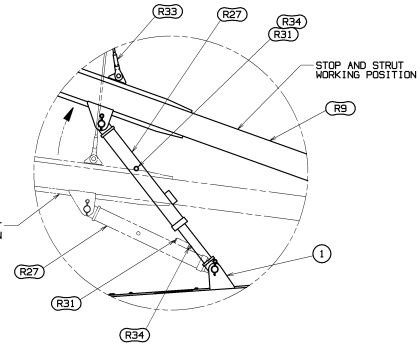

DETAIL Z
SCALE 0.100

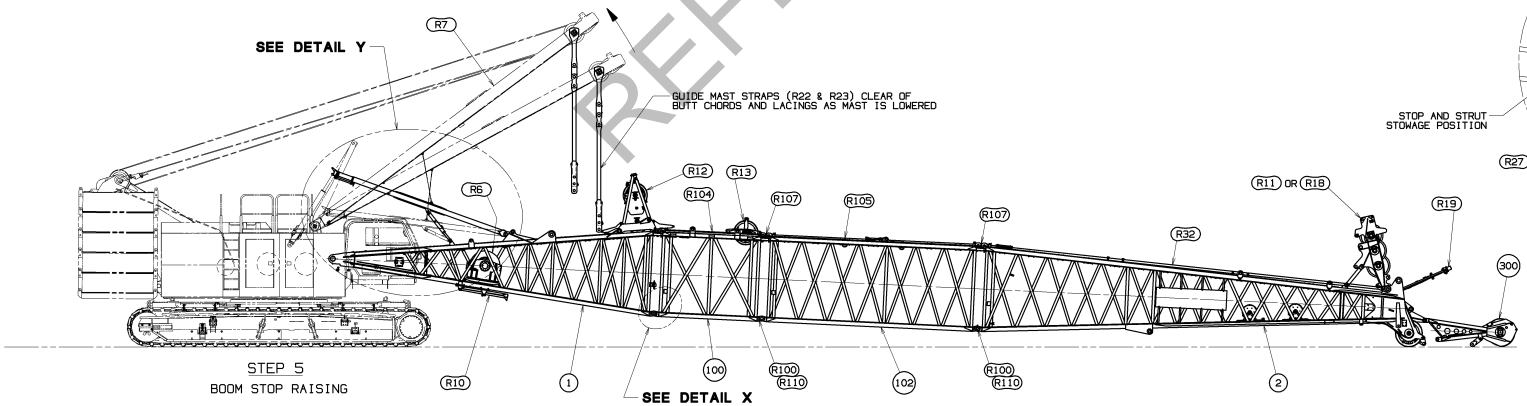

STEP 5
BOOM STOP RAISING

BOOM DOWN TO REMOVE TENSION ON MAST STRAPS (R22 & R23) AT WIRE ROPE GUIDE LINKS (R12).
SWING MAST STRAPS (R22 & R23) FORWARD AND INSTALL GUIDE PINS 196012 TO LIMIT MOVEMENT OF MAST STRAPS. (SEE DETAIL T ON SHEET 9).
UNPIN MAST STRAPS (R22 & R23) FROM LINKS IN WIRE ROPE GUIDE (R12). UNPIN GUIDE PINS 196012 ALLOWING MAST STRAPS (R22 & R23) TO SWING INTO VERTICAL POSITION.
STORE GUIDE PINS 196012 PER DETAIL U ON SHEET 9.

WITH BOOM STOP IN SHIPPING POSITION, UNPIN PENDANTS (R33) FROM LOWER LUG STORAGE POSITION ON MAST AND PIN TO LUG ON BOOM STRAPS. (SEE DETAIL Y ON SHEET 10).

BOOM UP TO RAISE BOOM STOPS (R9) AND EXTEND STRUTS (R27) UNTIL HOLE IN STRUT OUTER TUBE IS ABOVE ENDS OF STRUT INNER TUBES.
INSTALL PINS (R31) STORED ON STRUT (R27) TO LOCK BOOM STOP (R9) IN WORKING POSITION. (SEE DETAIL Z ON SHEET 10).

LOWER MAST UNTIL PENDANTS (R33) ARE SLACK AND INNER STRUT TUBES ARE RESTING ON PINS (31).
UNPIN PENDANTS (R33) FROM BOOM STOPS AND RETURN PENDANTS TO STOWAGE LUGS ON MAST (R7).

REFERENCE ONLY!

THIS PRINT REMAINS THE PROPERTY OF MANITOWOC CRANES, INC. ALL INFORMATION CONTAINED THEREIN IS CONFIDENTIAL. IT IS LOANED, SUBJECT TO RETURN UPON DEMAND, AND IN EXPRESS CONDITION THAT IT IS NOT TO BE COPIED OR USED DIRECTLY OR INDIRECTLY IN ANY WAY WHATSOEVER DETRIMENTAL TO OUR INTERESTS.

TOLERANCE UNLESS OTHERWISE SPECIFIED				
DECIMAL PLACES	FABRICATION		MACHINING	
	≤ 10 FEET	> 10 FEET		MACHINING TOLERANCE TO BE WITHIN DRAWING SIZE
(1) PLACE 0.0	±.19	±.19	±.03	
(2) PLACE 0.00	±.06	±.12	±.015	
(3) PLACE 0.000			±.005	
ANGLES	±1°30'		±0°30'	

DO NOT SCALE THIS DRAWING

SCALE NONE	Manitowoc Cranes, Inc. Manitowoc, Wisconsin	
DR. RHV		BOOM RIGGING
CK. TJA	MODEL MLC250	B10:82A
APP. JRR		

DWG. NO. 80137888
SHT 10 OF 11

PRIVATE LABELING REQUIREMENT TO CONFORM TO ENGINEERING SPECIFICATION 6909105794 FOR COMPONENTS LISTED IN 605500-05-035

DATE 03-16-23
REV. LTR. B

DWG. NO. 80137888
SHT 10 OF 11

BILL OF MATERIAL					
ITEM NO. / NO. REQD. / ITEM	DESCRIPTION	CATALOG NO.	MATERIAL	CODE NO. OR DWG. NO.	

ASSEMBLIES USED ON

REVISIONS

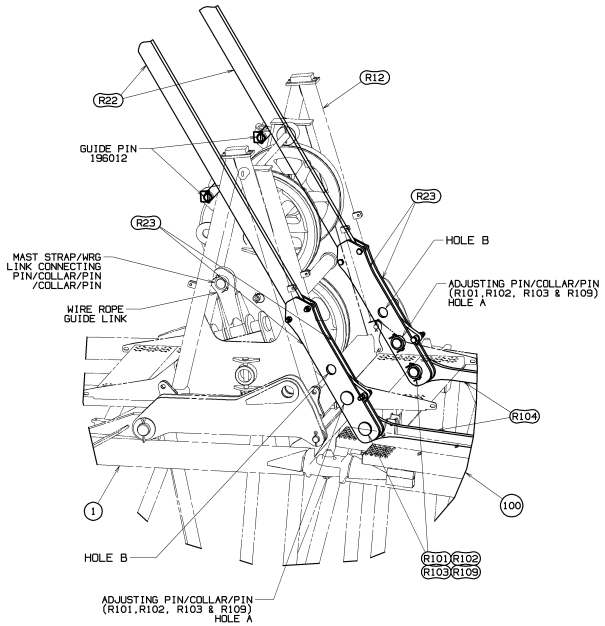

DETAIL AA (ISO)
SCALE 0.100

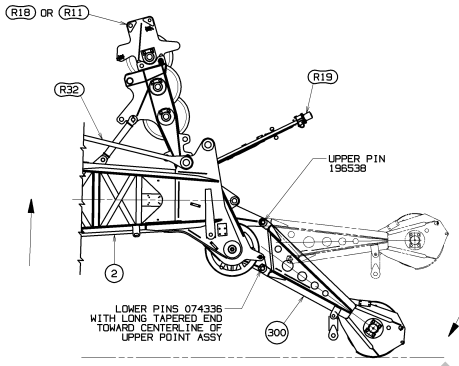

DETAIL BB
UPPER BOOM POINT ASSEMBLY

WITH UPPER PIN INSTALLED RAISE BOOM TO ALLOW UPPER BOOM POINT (ITEM 300) TO ROTATE INTO POSITION TO ALLOW LOWER PINS TO BE INSTALLED. (SEE DETAIL J ON SHEET 5).

SCALE 0.040

TO DISASSEMBLE BOOM

1. BOOM DOWN AND SUPPORT BOOM ON BLOCKING. UNREEVE BLOCK.
   IF EQUIPPED WITH UPPER BOOM POINT (ITEM 300) REMOVE LOWER CONNECTING PINS BEFORE UPPER POINT CONTACTS GROUND. (SEE DETAIL BB ON SHEET 11).
2. DISCONNECT MAST STRAPS FROM BOOM INSERT STRAPS.
   (REVERSE INSTALLATION STEP 6 ON SHEET 11).
3. LOWER BOOM STOPS TO SHIPPING POSITION USING PENDANTS (R33).
   (REVERSE LATER PORTION OF INSTALLATION STEP 5 ON SHEET 10).
4. CONNECT MAST STRAPS TO HANDLING LINK ON ROPE GUIDE (R12).
   (REVERSE FIRST PORTION ON INSTALLATION STEP 5 ON SHEET 10).
5. BOOM UP TO REMOVE SLACK FROM MAST STRAPS.

   WARNING:
   DO NOT BOOM UP TO PUT TENSION INTO MAST STRAPS. (REMOVE SLACK ONLY).
   TENSION IN MAST STRAPS WILL DAMAGE ROPE GUIDE AND BOOM BUTT.

6. REMOVE LOWER BUTT TO INSERT PINS AND BOOM DOWN TO DISENGAGE UPPER BOOM BUTT TO INSERT PINS. (REVERSE INSTALLATION STEP 4 ON SHEET 10).

   WARNING:
   BOOM MUST BE PROPERLY BLOCKED TO PREVENT SHIFTING DURING PIN REMOVAL.

7. SLOWLY BACK AWAY FROM BOOM.
8. REMOVE BOOM BUTT FROM ROTATING BED WITH MAST.
   (REVERSE INSTALLATION STEP 3 ON SHEET 9).

   DANGER:
   PREVENT MAST FROM COLLAPSING:
   FULLY RAISE MAST ARMS BEFORE RAISING MAST TO VERTICAL.

9. DISASSEMBLE BOOM WITH MAST. REMOVE LOWER CONNECTOR PINS FIRST.
   WITH BOOM STRAPS POSITIONED IN BRACKETS ON INSERTS AND BOOM TOP UNPIN LINKS (R107) AND ROTATE THEM INTO SHIPPING POSITION AND RETAIN THEM TO STRAPS WITH STOWAGE PIN.

REFERENCE ONLY!

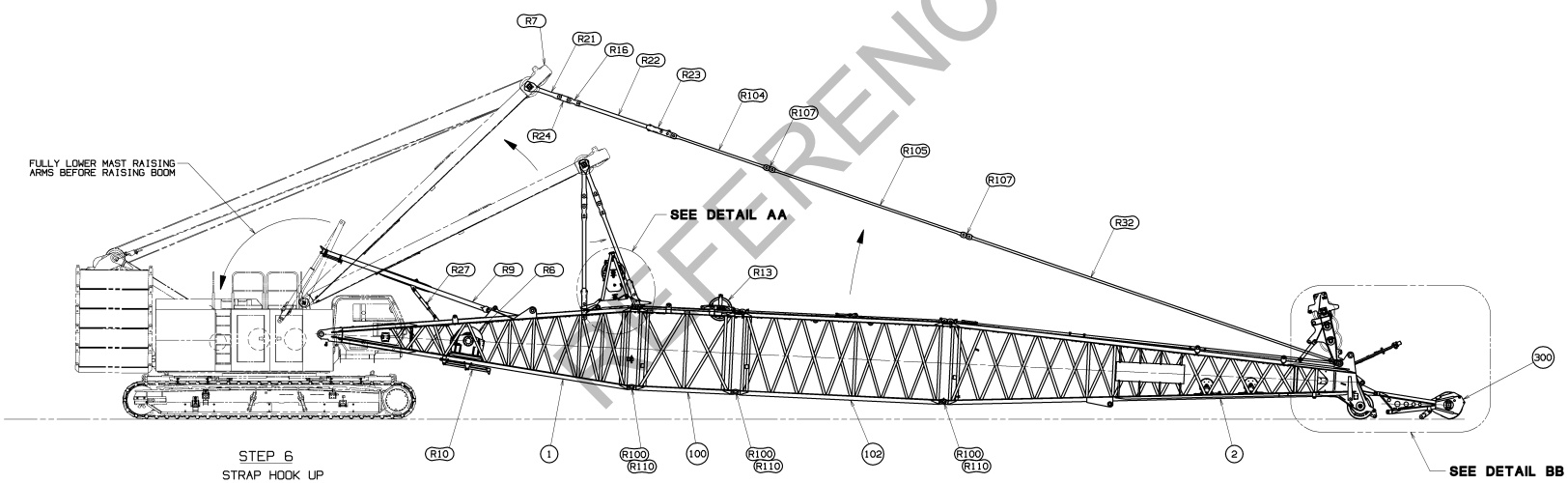

STEP 6
STRAP HOOK UP

RAISE OR LOWER MAST UNTIL MAST STRAPS (R22 & R23) ARE NEAR WIRE ROPE GUIDE LINKS (R12) ON BOOM BUTT ITEM 1.
SWING MAST STRAPS (R22 & R23) FORWARD AND INSTALL GUIDE PINS 196012. (SEE DETAIL AA ON SHEET 11).
BOOM DOWN TO ALIGN CONNECTING HOLES IN MAST STRAPS WITH HOLES IN BOOM STRAPS (SEE DETAIL AA ON SHEET 11).
(MAST STRAPS WILL SLIDE DOWN OVER GUIDE PINS 19612 AS SHOWN IN DETAIL AA ON SHEET 11. PUSH MAST STRAPS FORWARD AS REQUIRED).

PIN MAST STRAPS (R23) TO BOOM STRAPS WITH PINS/COLLARS/PINS (R101, R102, R103 & R109). HEADS OF PINS (R102) TO BE FACING OUTSIDE.

RELOCATE ADJUSTING PINS/COLLARS/PINS (R101, R102, R103 & R109) TO HOLE "A" OR "B" AS SPECIFIED ON BOOM LENGTH TABLE ON SHEET 2.
BOOM MAST UP OR DOWN AS NEEDED TO ALIGN HOLES AND INSTALL PINS IN PROPER HOLES.

REMOVE AND STORE GUIDE PINS 196012. (SEE DETAIL U ON SHEET 9).
CAUTION: STORE GUIDE PINS BEFORE RAISING MAST TO PREVENT DAMAGE TO WIRE ROPE GUIDE AND GUIDE PINS.

FULLY LOWER MAST RAISING ARMS.
DANGER: MAST WILL BUCKLE AND COLLAPSE IF IT CONTACTS ARMS WITH A FULLY RIGGED BOOM ATTACHED.

BOOM CAN NOW BE RAISED. (SEE DETAIL BB ON SHEET 11 FOR UPPER BOOM POINT ASSEMBLY (ITEM 300) IF EQUIPPED).

DWG. NO.
80137888
SHT 11 OF 11

PRIVATE LABELING REQUIREMENT TO CONFORM TO ENGINEERING SPECIFICATION 6909105794 FOR COMPONENTS LISTED IN 6095000-05-C05

DATE
03-16-23

REV. LTR.
B

THIS PRINT REMAINS THE PROPERTY OF MANITOWOC CRANES, INC.
ALL INFORMATION CONTAINED THEREIN IS CONFIDENTIAL. IT IS LOANED, SUBJECT TO RETURN UPON DEMAND, AND ON EXPRESS CONDITION THAT IT IS NOT TO BE COPIED OR USED DIRECTLY OR INDIRECTLY IN ANY WAY DETRIMENTAL TO OUR INTERESTS.

TOLERANCE UNLESS OTHERWISE SPECIFIED				
DECIMAL PLACES	FABRICATION		MACHINING	
	≤ 10 FEET	> 10 FEET		MACHINING TOLERANCE TO BE WITHIN FABRICATION TOLERANCE IF NOT SPECIFIED
(1) PLACE 0.0	±.19	±.18	±.03	
(2) PLACE 0.00	±.06	±.12	±.015	
(3) PLACE 0.000			±.005	
ANGLES	±1°30'		±0°30'	

SCALE NOT TO SCALE
DR. RHV
CK. TJA
APP. JRR

Manitowoc Cranes, Inc.
Manitowoc, Wisconsin

MODEL MLC250

BOOM RIGGING

B10:82A

DWG. NO.
80137888

SHT 11 OF 11

DO NOT SCALE THIS DRAWING