POTAIN®

Hup 32-27

ASME B30.29-2018

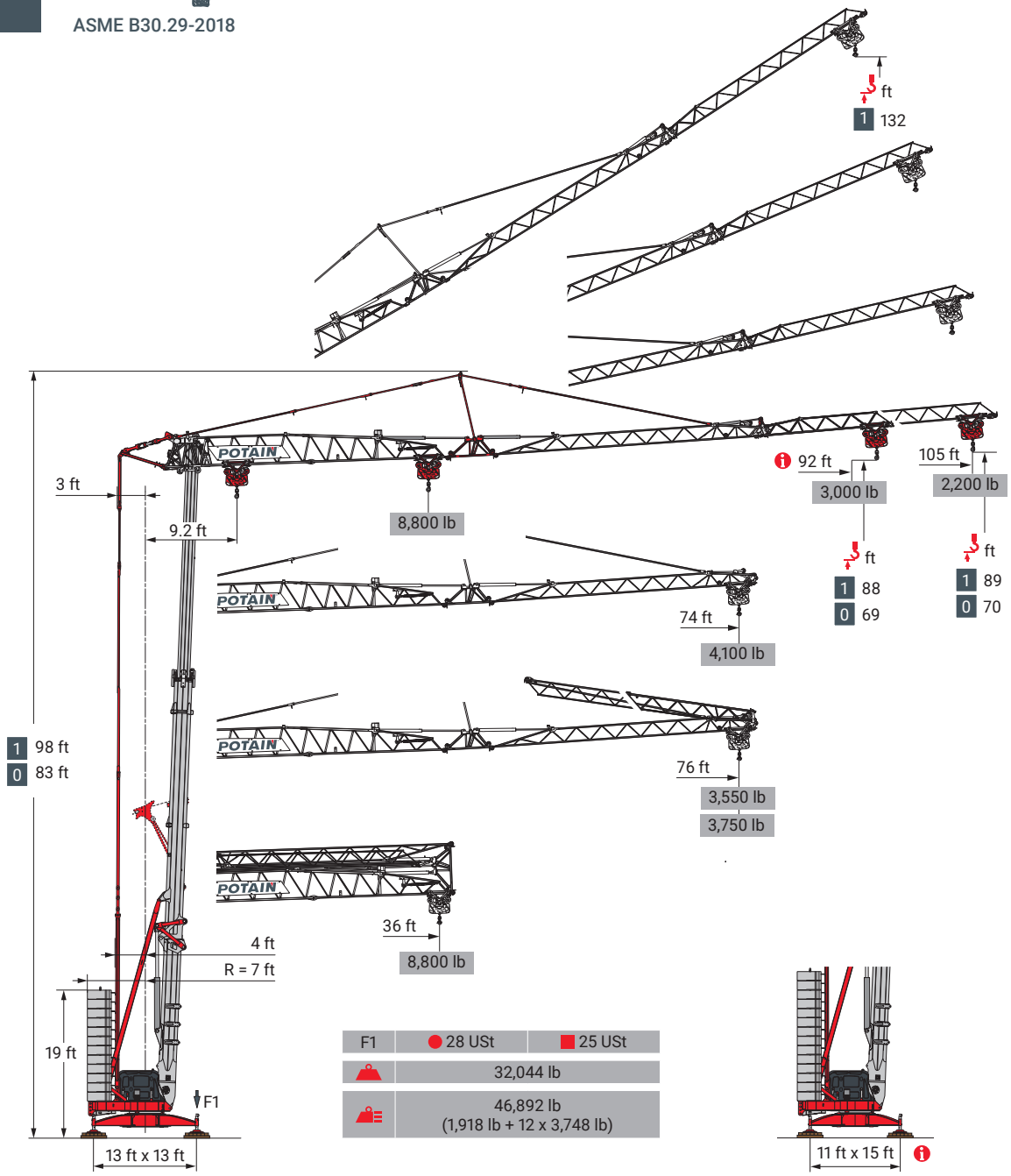

F1	28 USt	25 USt
	32,044 lb	
	46,892 lb (1,918 lb + 12 x 3,748 lb)	

Smart Set-up | Drive Control | Power Control | Top Site | Top Tracing 3

Values have been rounded.

Load curves

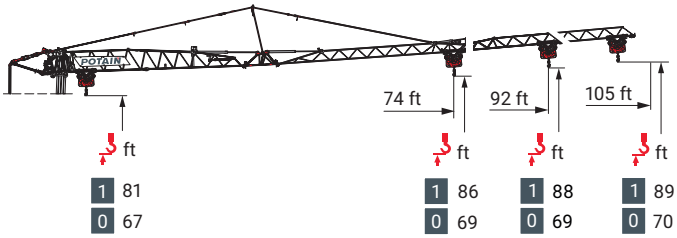

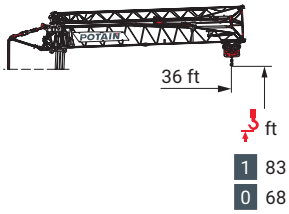

105 ft	9.2 ►	35	36	39	43	46	49	52	56	59	62	66	72	82	89	98	105	ft
		8,800	8,550	7,650	6,900	6,300	5,800	5,350	4,950	4,600	4,300	4,050	3,600	3,050	2,750	2,400	2,200	lb
92 ft	9.2 ►		38	39	43	46	49	52	56	59	62	66	72	82	89	92		ft
			8,800	8,550	7,700	7,050	6,450	5,950	5,550	5,150	4,850	4,550	4,050	3,450	3,100	3,000		lb
74 ft	9.2 ►			40	43	46	49	52	56	59	62	66	74					ft
				8,800	8,100	7,400	6,800	6,250	5,800	5,450	5,100	4,750	4,100					lb
105-92-74 ft	9.2 ►			36														ft
				8,800														lb

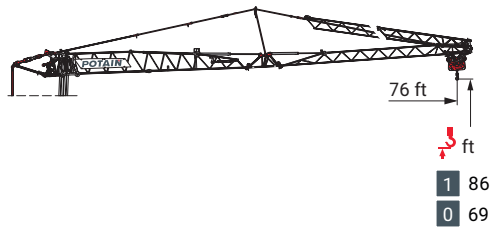

105 ft	9.2 ►	37	39	43	46	49	52	56	59	62	66	72	76	ft
		8,800	8,050	7,300	6,650	6,100	5,650	5,250	4,850	4,550	4,250	3,800	3,550	lb
92 ft	9.2 ►	38	39	43	46	49	52	56	59	62	66	72	76	ft
		8,800	8,500	7,700	7,050	6,450	5,950	5,550	5,150	4,850	4,550	4,050	3,750	lb

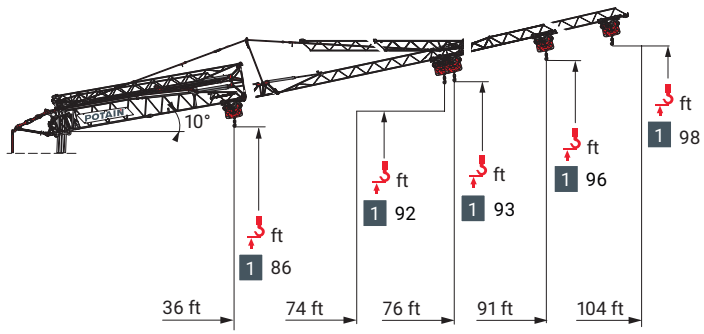

105 ft	9.2 ►	60	62	66	72	82	89	98	104	ft
		4,400	4,250	4,000	3,550	3,000	2,700	2,350	2,200	lb
92 ft	9.2 ►			66	72	79	91			ft
				4,400	3,950	3,550	3,000			lb
74 ft	9.2 ►			69	72	74				ft
				4,400	4,200	4,100				lb
105 ft	9.2 ►		63	66	72	76				ft
			4,400	4,250	3,750	3,550				lb
92 ft	9.2 ►			66	72	76				ft
				4,400	4,000	3,750				lb
105-92-74 ft	9.2 ►	36								ft
		4,400								lb

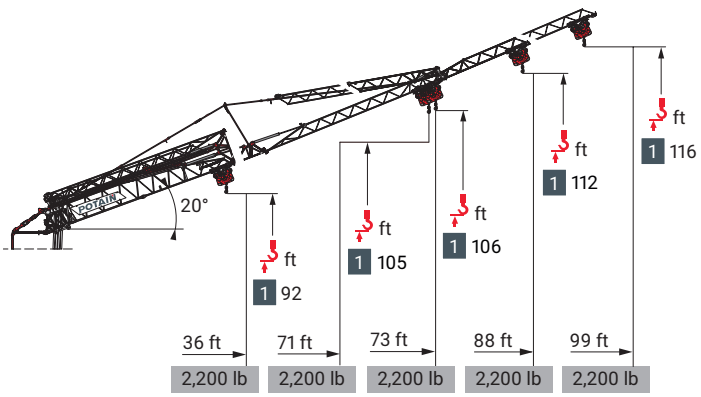

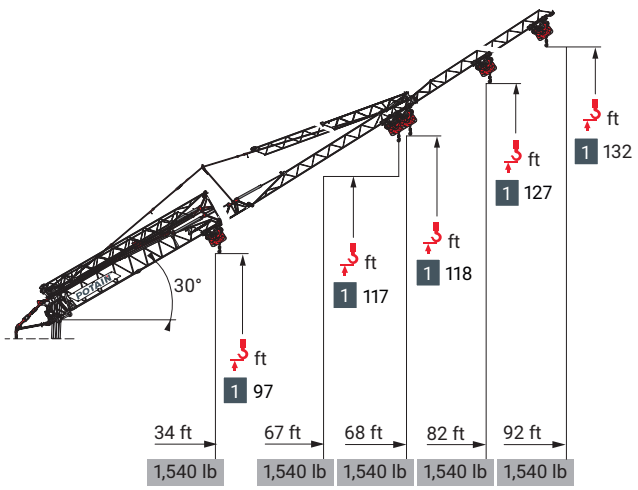

Mechanisms

480 V - 60 Hz								hp	kW
	18 HPL™ 10	fpm	6.9	62	118	190	213	18	13
		lb	8,800	8,800	4,400	2,200	1,100		
	3 DVF 5	fpm	3 → 148 (0 → 2,200 lb) 3 → 135 (2,200 lb → 8,800 lb)					3	2.2
	HPS 141	rpm	0 → 0.9					5	3.7

IEC 60204-32	kVA	
480 V (+6% -10%) 60 Hz	19 → 13 kVA	

Erection

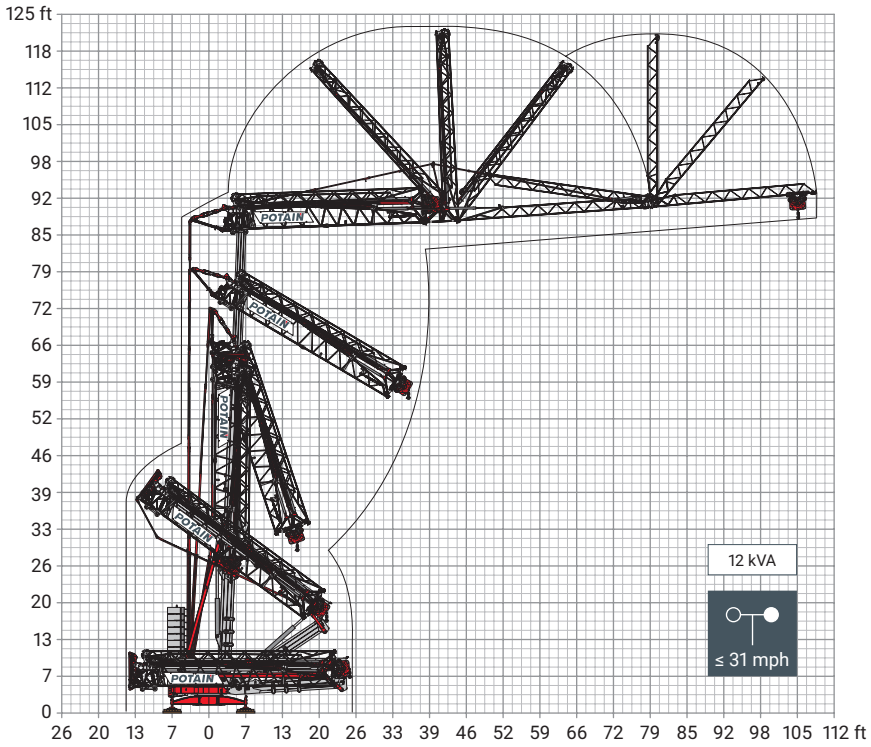

Transport

DS62/S120 - 6 mph

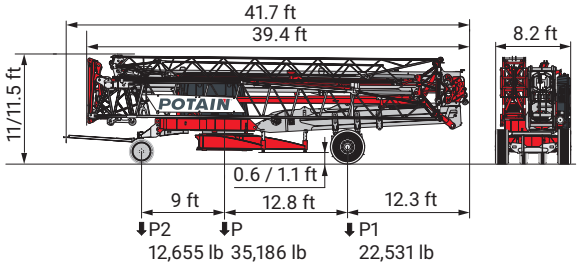

DJ105A/S125A - 15.5 mph

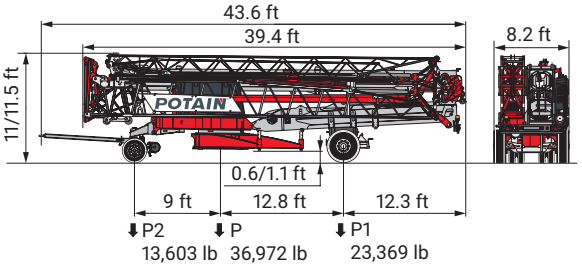

DJ126MA/S125A - 15.5 mph

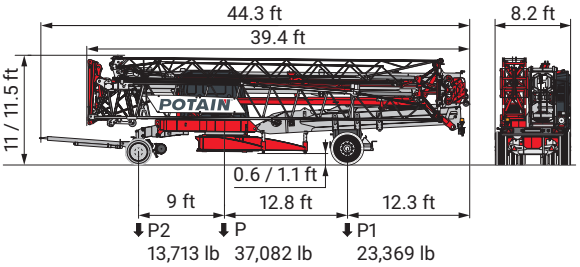

North America Highway Axle

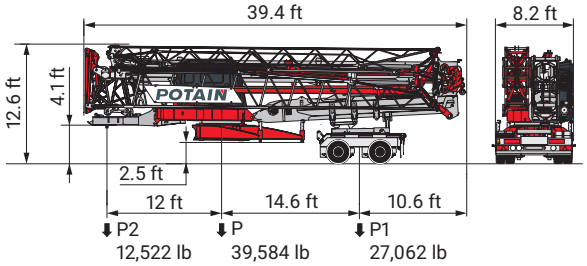

40’ Open Top High Cube



The reactions and ballast configurations presented in this data sheet meet the specifications of EN 14439:2025 and ASME B30.29-2018 standards.
The “out of service” wind profile is determined in accordance with ASCE 7-16 and ASCE 37-14 specifications as follow:
The “standard” design wind is determined from an ultimate reference wind speed of 115 mph (185 kph) corresponding to an average recurrence interval of 700 years, calculated for an Exposure C category, and combined with a 0.85 reduction factor based on the assumption that the crane is considered as a temporary construction structure used for 2 years or less.
As a result, this “standard” wind profile is covered by the EN 14439:2025 C25 wind profile, which is used to determine all technical data provided in this document.

- R — Rear slewing radius
- Consult us
- Reactions in service
- Reactions out of service
- Weight without load, without ballast, without transport axles, with max. jib and standard height
- Total ballast weight
- Standard equipment
- Options
- Hoisting
- Trolleying
- Slewing
- kVA — Required power
- Power Control Function: winch speeds adapted to the available power

Hook heights given with plated pulley block

This commercial document is not legally binding

For any technical information, please refer to the corresponding instructions

© 2026 The Manitowoc Company, Inc.
Ref. 02D_ASMEB30.29_Hup32-27_2016_01-11
Hup 32-27

manitowoc.com