OPERATOR MANUAL

This manual has been prepared for and is considered part of -

10000A-1

Model Number

XXXXXRef

Serial Number

This Manual is divided into the following sections:

	IMPORTANT INFORMATION
SECTION 1	**SAFETY**
SECTION 2	**OPERATION**
SECTION 3	**LOAD SAFETY DEVICE**
SECTION 4	**ASSEMBLY/DISASSEMBLY OF MAIN MACHINERY**
SECTION 5	**ASSEMBLY/DISASSEMBLY OF CRANE ATTACHMENT**
SECTION 6	**WIRE ROPE**
SECTION 7	**MAINTENANCE**
SECTION 8	**REFERENCE MATERIAL**
SECTION 9	**DIAGRAM**

NOTICE

The serial number of the crane is the only method the Manitowoc Crane Care Lattice Team has of providing you with correct parts and service information.

Always furnish serial number of crane when ordering parts or discussing service problems with your Manitowoc distributor or the Manitowoc Crane Care Lattice Team.

WARNING

To prevent death or serious injury:

- Avoid unsafe operation and maintenance.

  Crane and attachments must be operated and maintained by trained and experienced personnel. Manitowoc is not responsible for qualifying these personnel.
- Do not operate or work on crane or attachments without first reading and understanding instructions contained in Operator Information Manual and Service Manual supplied with crane and applicable attachments.
- Store Operator Information Manual and Service Manual in operator's cab.

  If Operator Information Manual or Service Manual is missing from cab, contact your Manitowoc distributor for a new one.

For Reference Only

©2016 Manitowoc
Published 01-28-16, Control #250-01

THE ORIGINAL LANGUAGE OF THIS PUBLICATION IS ENGLISH

Reference Only

TABLE OF CONTENTS

	IMPORTANT INFORMATION	
1.	SAFETY	1
2.	OPERATION	2
3.	LOAD SAFETY DEVICE	3
4.	ASSEMBLY/DISASSEMBLY OF MAIN MACHINERY	4
5.	ASSEMBLY/DISASSEMBLY OF CRANE ATTACHMENT	5
6.	WIRE ROPE	6
7.	MAINTENANCE	7
8.	REFERENCE MATERIALS	8
9.	DIAGRAM	9

Reference Only

Reference Only

IMPORTANT INFORMATION

1. SAFETY

1.1 SAFETY INFORMATION 1-1
1.2 EXPLANATION OF WARNING LABELS IN THE MACHINE 1-2
1.2.1 HANDLING OF WARNING LABELS IN THE MACHINE 1-2
1.2.2 LABEL LAYOUT 1-3
1.2.3 DETAIL OF LABEL 1-10
1.3 SAFE OPERATING PRACTICES FOR MOBILE CRANES 1-19
1.4 SAFETY AT INSPECTION AND MAINTENANCE WORK 1-43
1.5 SAFETY DURING ASSEMBLY AND DISASSEMBLY WORK 1-46
1.6 CAUTIONS IN HANDLING OIL AND PAINT 1-47
1.7 SAFETY EQUIPMENT (OPTION) 1-48

2. OPERATION

2.1 TERMINOLOGY OF MACHINE EACH PART 2-1
2.2 LOCATIONS AND TERMS OF OPERATING CONTROLS 2-4
2.2.1 HANDING LEVER AND PEDAL 2-5
2.2.2 OPERATING SWITCHES 2-14
2.2.3 VARIOUS SETTING OF MONITOR 2-42
2.2.4 ANEMOMETER INSTALLATION (OPTION) 2-51
2.2.5 AIR CONDITIONER 2-52
2.2.6 AIR CONDITIONER FOR AUTO-IDLE STOP (AIS AIR CONDITIONER) (OPTION) 2-58
2.2.7 AM/FM RADIO 2-61
2.2.8 1WAY CALL (TRANSMITTER) 2-72
2.2.9 MONITORING CAMERA (OPTION) 2-73
2.3 CRANE OPERATION 2-76
2.3.1 ADJUSTING THE OPERATOR'S SEAT 2-76
2.3.2 GETTING ON AND OFF FROM / TO OPERATOR'S CAB 2-78
2.3.3 STARTING AND STOPPING THE ENGINE 2-79
2.3.4 EMISSION CONTROL DEVICE 2-84
2.3.5 TIER4 FINAL INDUCEMENT CONTROL 2-100
2.3.6 AUTO IDLE STOP FUNCTION 2-111
2.3.7 FUNCTION LOCK LEVER 2-114
2.3.8 TRAVELING OPERATION 2-115
2.3.9 SWINGING OPERATION 2-118
2.3.10 BOOM RAISING/LOWERING OPERATION 2-123
2.3.11 HOOK HOISTING/LOWERING OPERATION 2-127
2.4 FREE FALL OPERATION 2-136
2.5 CLAMSHELL OPERATION 2-142

Reference Only

2.5.1 PREPARATION WORK 2-144
2.5.2 CLAMSHELL WORK 2-148
2.6 HANDLING OF HYDRAULIC TAGLINE (OPTION) 2-149
2.7 HANDLING OF VIBRO HAMMER 2-152
2.8 OPERATION IN WEATHER CHANGE AND SPECIAL CIRCUMSTANCE 2-155
2.8.1 CAUTION AGAINST WIND 2-155
2.8.2 CAUTION AGAINST ELECTRIC SHOCK 2-167
2.8.3 CAUTION AGAINST RADIO WAVE INTERFERENCE 2-169
2.8.4 CAUTION AGAINST LIGHTNING 2-170
2.8.5 COUNTERMEASURE AGAINST EARTHQUAKE 2-170

3. LOAD SAFETY DEVICE

3.1 ARRANGEMENT OF EQUIPMENTS 3-3
3.2 TYPES AND FUNCTIONS OF EQUIPMENT 3-6
3.3 CONNECTING PROCEDURE OF WIRING 3-12
3.3.1 CRANE ATTACHMENT 3-13
3.4 FUNCTION OF MONITOR 3-20
3.5 OPERATING PROCEDURE OF MONITOR 3-21
3.5.1 SETTING OF CRANE CONFIGURATION 3-26
3.5.2 SELECTION OF MAIN/AUXILIARY HOOK SELECTION 3-35
3.5.3 SETTING OF WORK AREA LIMIT VALUE 3-36
3.6 SWING LIMITATION DEVICE (OPTION) 3-41
3.7 LOAD HISTORY (DATA LOGGER) 3-53
3.8 FUNCTION OF GROUND INCLINE INDICATOR (OPTION) 3-54
3.9 WARNING AND AUTO-STOP 3-56
3.9.1 CONTENT OF WARNING AND AUTO-STOP 3-56
3.9.2 CONTENT OF AUTO-STOP 3-57
3.9.3 RELEASING AUTO-STOP 3-58
3.10 INSPECTION 3-64
3.10.1 INSPECTION PROCEDURE WHEN ERECTING THE BOOM AFTER THE ATTACHMENT ASSEMBLY WORK IS COMPLETED 3-64
3.10.2 INSPECTION AFTER ERECTING ATTACHMENT 3-66
3.11 CAUTIONS IN HANDLING LOAD SAFETY DEVICE 3-68
3.12 ERROR CODE DISPLAY AND MESSAGE 3-69
3.13 WARNING CODE LIST AND CONDITION, ACTION 3-82
3.14 CHECKING PROCEDURE OF LOAD SAFETY DEVICE 3-88

4. ASSEMBLY/DISASSEMBLY OF MAIN MACHINERY

4.1 SWING AND TRAVEL STABILITY 4-1
4.2 HANDLING THE REMOTE CONTROL SWITCH BOX 4-4
4.3 ASSEMBLING OF BASE MACHINE 4-8

Reference Only

4.3.1 CAB STEP EXTENSION 4-10
4.3.2 UNLOADING BASE MACHINE FROM TRAILER 4-12
4.3.3 EXTENDING THE CRAWLER 4-13
4.3.4 INSTALLING OF LADDER FOR MACHINERY GUARD 4-20
4.3.5 RAISING GANTRY 4-21
4.3.6 INSTALLING THE BOOM TIP 4-26
4.3.7 INSTALLATION OF THE BASE GUY LINE 4-28
4.3.8 FRONT DRUM WIRE ROPE REEVING 4-30
4.3.9 CARBODY WEIGHT INSTALLATION (USING SELF REMOVAL DEVICE) 4-35
4.3.10 ASSEMBLING THE COUNTERWEIGHTS (USING SELF REMOVAL DEVICE) 4-50
4.3.11 MOUNTING THE ASSEMBLED COUNTERWEIGHT TO BASE MACHINE (USING SELF REMOVAL DEVICE) 4-58
4.4 DISASSEMBLY OF BASE MACHINE 4-67
4.4.1 REMOVE THE COUNTERWEIGHTS FROM THE MACHINE (USING SELF REMOVAL DEVICE) 4-69
4.4.2 DISASSEMBLY OF THE COUNTERWEIGHT 4-78
4.4.3 CARBODY WEIGHT REMOVAL (USING SELF REMOVAL DEVICE) 4-83
4.4.4 WINDING UP THE FRONT DRUM WIRE ROPE 4-97
4.4.5 REMOVING THE BOOM GUY LINE 4-99
4.4.6 DISASSEMBLING THE BOOM TIP 4-101
4.4.7 LOWERING THE GANTRY 4-103
4.4.8 REMOVAL OF LADDER FOR MACHINERY GUARD 4-108
4.4.9 RETRACTING THE CRAWLERS 4-109
4.4.10 BASE MACHINERY LOADING ONTO TRAILER 4-115
4.4.11 STORE AND REMOVAL OF CAB STEP 4-118
4.5 TRANSPORTATION 4-120
4.6 INSTALLATION/REMOVAL OF BOOM BASE 4-121
4.6.1 BOOM BASE INSTALLATION 4-121
4.6.2 BACKSTOP INSTALLATION 4-123
4.6.3 UPPER SPREADER INSTALLATION 4-124
4.6.4 REEVING BOOM HOIST WIRE ROPE 4-125
4.6.5 INSTALLATION OF BOOM HOIST WIRE ROPE TO THE DRUM 4-127
4.6.6 WINDING UP OF BOOM HOIST WIRE ROPE TO THE DRUM 4-128
4.6.7 UPPER SPREADER REMOVAL 4-130
4.6.8 BACKSTOP REMOVAL 4-131
4.6.9 REMOVAL OF BOOM BASE 4-132
4.7 CARBODY WEIGHT INSTALLATION (WHEN USING ASSIST CRANE) 4-134
4.7.1 CARBODY WEIGHT INSTALLATION 4-134
4.7.2 CARBODY WEIGHT REMOVAL 4-138
4.8 SELF REMOVAL CYLINDER (OPTION) INSTALLATION/REMOVAL 4-141

Reference Only

4.9 SELF REMOVAL CYLINDER (OPTION) TAKEOUT/STORAGE 4-145
4.9.1 TAKEOUT OF CYLINDER 4-145
4.9.2 STORAGE OF CYLINDER 4-149
4.10 CRAWLER INSTALLATION/REMOVAL (USING SELF REMOVAL CYLINDER [OPTION]) 4-152
4.10.1 INSTALLATION OF CRAWLER 4-152
4.10.2 REMOVAL OF CRAWLER 4-169
4.11 CARBODY WEIGHT INSTALLATION/REMOVAL (USING SELF REMOVAL CYLINDER [OPTION]) 4-182
4.11.1 CARBODY WEIGHT INSTALLATION 4-182
4.11.2 CARBODY WEIGHT REMOVAL 4-192

5. ASSEMBLY/DISASSEMBLY OF CRANE ATTACHMENT

5.1 ASSEMBLING THE ATTACHMENT 5-5
5.1.1 ARRANGEMENT OF BOOM/JIB/GUY LINE 5-6
5.1.2 BOOM AND GUY LINE ARRANGEMENT 5-8
5.1.3 HANDLING OF SPREADER GUIDE 5-15
5.1.4 INSTALLING THE BOOM 5-18
5.1.5 CAUTION FOR CANTILEVER 5-28
5.1.6 FRONT DRUM WIRE ROPE REEVING 5-29
5.1.7 INSTALLING THE AUXILIARY SHEAVE 5-34
5.1.8 REAR DRUM WIRE ROPE REEVING TO AUXILIARY SHEAVE 5-35
5.1.9 ASSEMBLING THE FIXED JIB 5-38
5.1.10 REAR DRUM WIRE ROPE REEVING TO THE FIXED JIB 5-41
5.1.11 FUNCTION CHECK OF EACH LIMIT SWITCH 5-44
5.2 ERECTING THE ATTACHMENT 5-45
5.2.1 CONFIRMATION BEFORE ERECTING THE ATTACHMENT 5-45
5.2.2 ERECTING THE ATTACHMENT 5-46
5.2.3 CONFIRMATION BEFORE LOWERING THE ATTACHMENT 5-49
5.2.4 LOWERING THE ATTACHMENT 5-50
5.3 DISASSEMBLING THE ATTACHMENT 5-51
5.3.1 TREATMENT OF OVERHOIST LIMIT SWITCH WIRING 5-52
5.3.2 WINDING UP THE FRONT/REAR DRUM WIRE ROPES 5-54
5.3.3 DISASSEMBLING THE JIB 5-56
5.3.4 REMOVING THE AUXILIARY SHEAVE 5-59
5.3.5 DISASSEMBLING THE BOOM 5-60
5.4 CAUTION WHEN TRANSPORTING BOOM 5-65

6. WIRE ROPE

6.1 HANDLING OF WIRE ROPE 6-1
6.1.1 SPECIFICATION OF WIRE ROPE 6-2

Reference Only

6.1.2 WIRE ROPE LENGTH 6-5
6.1.3 CAUTIONS IN HANDLING WIRE ROPE 6-7
6.1.4 WINDING WIRE ROPE TO THE DRUM 6-8
6.1.5 CORRECTING METHOD OF ENTANGLED WIRE ROPE 6-12
6.1.6 ROPE SOCKET INSTALLATION 6-14
6.1.7 REPLACEMENT STANDARDS FOR WIRE ROPE 6-15

7. MAINTENANCE

7.1 INSPECTION INTERVAL 7-9
7.1.1 TABLE OF INSPECTION POINTS 7-9
7.1.2 TABLE OF OIL, GREASE AND WATER SUPPLY POINTS 7-11
7.2 INSPECTION 7-13
7.2.1 INSPECTION OF UPPER MACHINERY 7-13
7.2.2 INSPECTION OF LOWER MACHINERY 7-20
7.2.3 INSPECTION OF ATTACHMENT 7-22
7.2.4 INSPECTION METHOD OF EACH POINT 7-24
7.3 INSPECTION AND OIL/GREASE AND WATER SUPPLY 7-54
7.3.1 INSPECTION, OIL/GREASE AND WATER SUPPLY POINTS OF UPPER MACHINERY 7-56
7.3.2 LOWER LUBRICATION 7-60
7.3.3 ATTACHMENT LUBRICATION 7-62
7.3.4 INSPECTION, GREASING (WATER SUPPLY) ON EACH POINT 7-64
7.4 REPLACEMENT AND CLEANING/WASHING FILTER ELEMENT AND STRAINER 7-86
7.4.1 REPLACEMENT, CLEANING, WASHING POINTS OF FILTER ELEMENT AND STRAINER 7-86
7.4.2 REPLACEMENT, CLEANING, WASHING METHODS OF FILTER ELEMENT AND STRAINER 7-88
7.5 BATTERY INSPECTION 7-108
7.6 LOCATION AND USE OF FUSE 7-114
7.7 OPERATION UNDER SEVERE CONDITIONS 7-116
7.8 HANDLING OF DIESEL PARTICULATE FILTER 7-120
7.9 MACHINE STORAGE 7-123
7.10 TIGHTENING TORQUE VALUES 7-124
7.11 PERIODICAL REPLACING SECURITY PARTS 7-129
7.12 ADJUSTMENT 7-131
7.12.1 ADJUSTMENT OF FRONT, REAR, THIRD (OPTION) DRUM LOCKS 7-131
7.12.2 ADJUSTMENT OF BOOM DRUM LOCK 7-132
7.12.3 CRAWLER SHOES ADJUSTMENT 7-133
7.13 CONSUMABLE PARTS LIST 7-134
7.14 MEASURES REQUIRED FOR FRONT, REAR WINCH MONITORING 7-142

Reference Only

7.14.1 THEORETICAL SERVICE LIFE 7-142
7.14.2 USED PROPORTION OF THEORETICAL SERVICE LIFE 7-143
7.14.3 DETERMINING OF THE RESIDUAL THEORETICAL SERVICE LIFE 7-147

8. REFERENCE MATERIALS

8.1 SPECIFICATION 8-1
8.1.1 CRANE OUTSIDE DIMENSION 8-2
8.1.2 CRANE SPECIFICATION, PERFORMANCE 8-3
8.1.3 CRANE WORKING RANGES 8-5
8.2 DIMENSION, WEIGHT OF EACH COMPONENT 8-8
8.2.1 BASE MACHINE 8-8
8.2.2 COUNTERWEIGHT 8-10
8.2.3 ATTACHMENT 8-11
8.3 CLAMSHELL RATED LOADS (OPTION) 8-13
8.4 SWING AND TRAVEL STABILITY 8-17
8.5 TRAVEL ALLOWABLE SLOPE ANGLE 8-20
8.5.1 CRANE ATTACHMENT INSTALLED : BOOM INSERT CONFIGURATION 8-20
8.6 LOW GANTRY POSITION 8-26
8.7 SAFETY DEVICE LIST (OPTION) 8-27

9. DIAGRAM

9.1 HYDRAULIC DIAGRAM 9-1
9.2 ELECTRIC SCHEMATIC 9-5

Reference Only

IMPORTANT INFORMATION

Thank you for your purchasing Manitowoc crawler crane.
Full-hydraulically operated crawler crane is manufactured based on our many years of experience and expertise.
This manual describes the important information about the Model 10000A-1.
Before operating the machine, be sure to thoroughly read this manual to use the machine safely and efficiently.

⚠ WARNING

Do not operate or maintain this machine until you read this manual and understand the instructions.
Improper operation or maintenance of this machine may cause accidents and could result in a serious injury or loss of life.
Always keep this manual in the operators cab.
If it is missing or damaged, place an order to a Manitowoc authorize distributor for a replacement.
If the machine is to be sold to others, hand over this manual together.
If you have any questions, please consult your Manitowoc authorize distributor.

This machine's specification is based on Mobile crane ASME B30.5.
As for class of utilization related to crane life, this crane is classified as [A1] of ISO 4301/2, FEM 1.001.
If there is any doubt if this crane conforms to the standard or regulation of your country, contact Manitowoc or your nearest Manitowoc authorized distributor.

Reference Only

MACHINE SERIAL NUMBER AND HOUR METER

When you order repair parts and when you need repair or service of the machine, always inform us the machine serial number stamped on the number plate and the total number of hours indicated on the hour meter which is located in the left front stand.

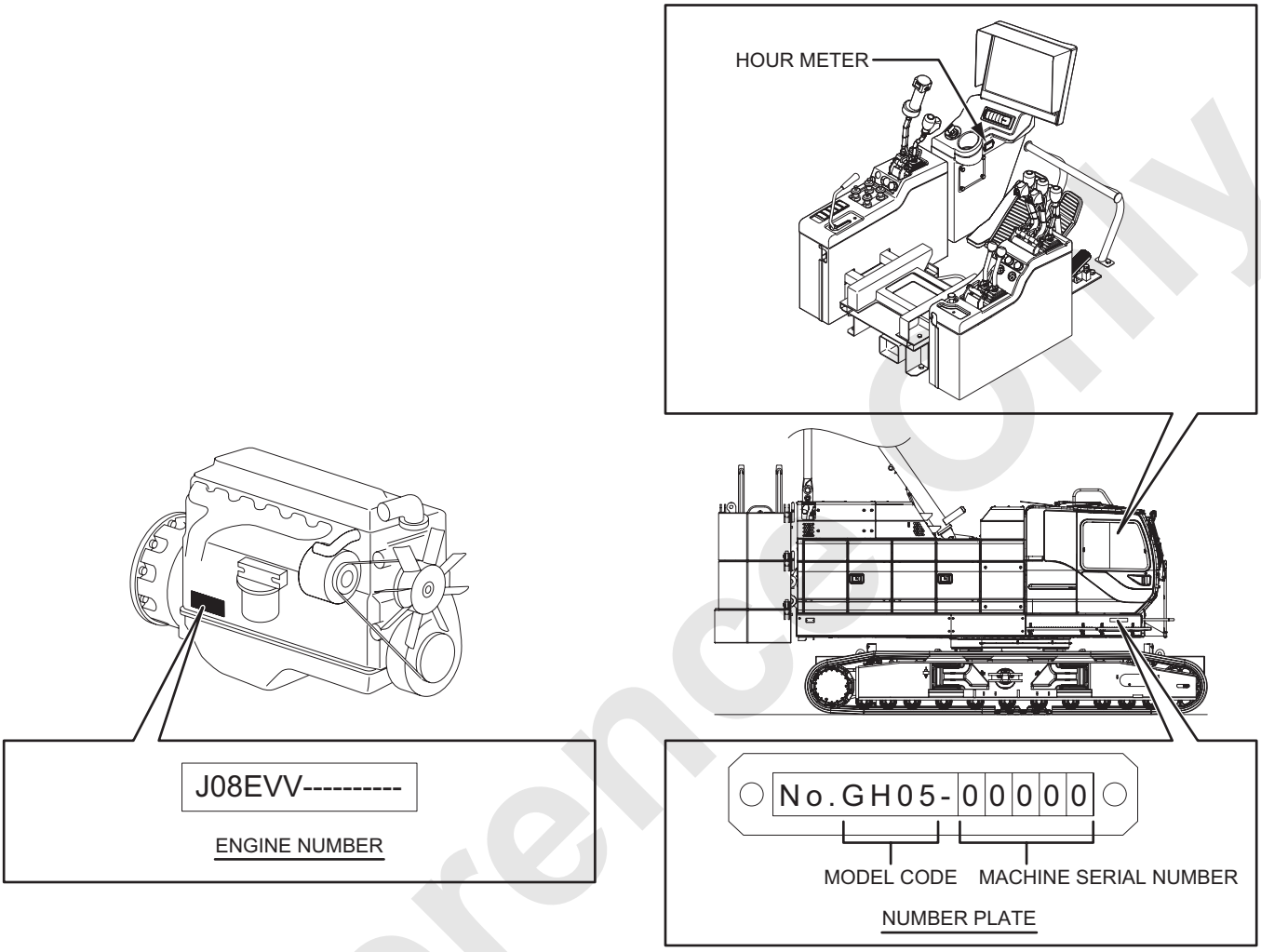

MACHINE MODEL	10000A-1	MACHINE SERIAL No.	GH05-	ENGINE No.	J08EVV-

WARRANTY

The terms under which this machine is guaranteed are clearly defined in the accompanying WARRANTY.
Trouble and damage occurred during the terms of guarantee shall be repaired at no cost to the purchaser according to the warrant description if the trouble or damage is recognized to be our responsibility.
However, if you use the machine contrary to the instructions of this manual, the WARRANTY does not cover any damage to the machine.

Reference only

REPAIR PARTS

When servicing and repairing the machine, be sure to use genuine parts in order to make the machine performance display sufficiently.
Since the important security parts are prepared to ensure safety and to protect the machine from an serious accident, be sure to replace them on every specified period of time.
The part number described in the operator's manual is to be changed without prior notice.
When place an order, please confirm the part number with the parts manual or the engine hand book.

MACHINE DIRECTION (FRONT, REAR, LEFT AND RIGHT)

In this manual, idler wheel side is called "front" of the lower machinery and "front, rear, left and right" of the upper machinery are called based on the operator's view when he sits down on the operator's seat and facing front.

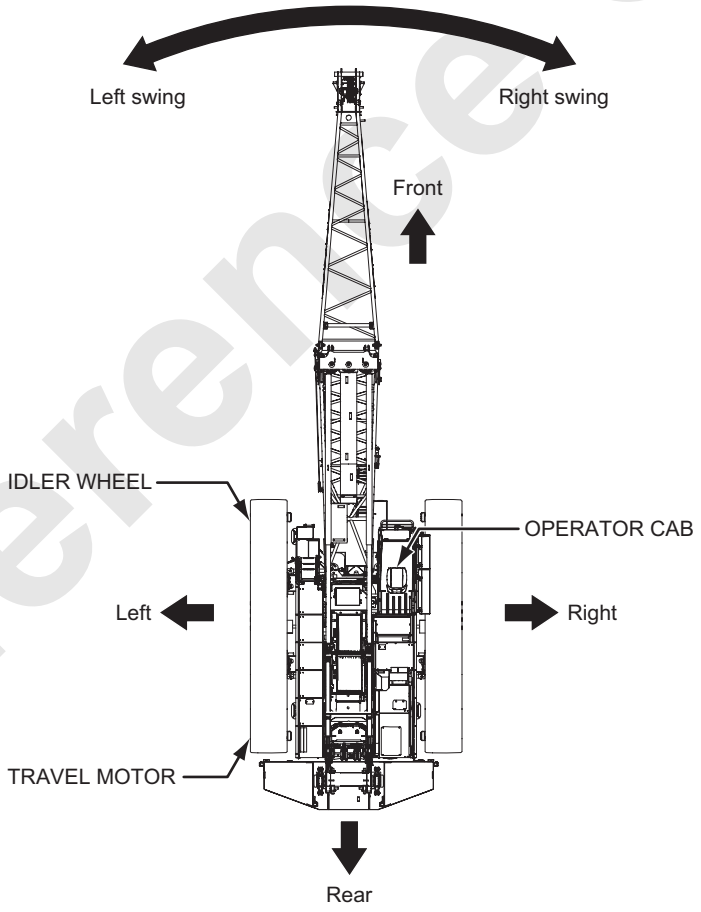

Reference Only

Reference Only

1. SAFETY

1.1 SAFETY INFORMATION 1-1
1.2 EXPLANATION OF WARNING LABELS IN THE MACHINE 1-2
1.2.1 HANDLING OF WARNING LABELS IN THE MACHINE 1-2
1.2.2 LABEL LAYOUT 1-3
1.2.3 DETAIL OF LABEL 1-10
1.3 SAFE OPERATING PRACTICES FOR MOBILE CRANES 1-19
1.4 SAFETY AT INSPECTION AND MAINTENANCE WORK 1-43
1.5 SAFETY DURING ASSEMBLY AND DISASSEMBLY WORK 1-46
1.6 CAUTIONS IN HANDLING OIL AND PAINT 1-47
1.7 SAFETY EQUIPMENT (OPTION) 1-48

Reference Only

Reference Only

1. SAFETY

1.1 SAFETY INFORMATION

Most accidents, which occur during operation, are due to neglect of precautionary measures and safety rules.
Sufficient care should be taken to avoid these accidents.
Erroneous operation, lubrication or maintenance services are very dangerous and may cause injury or death of personnel.
Thus, precautionary measures, or notes, written in this manual should be read and understood by personnel before starting each task.
Operation, inspection, and maintenance should be carefully carried out, and safety must be given the first priority.
Messages of safety are indicated with caution marks.
The safety information contained in this manual is intended only general safety information.
Messages of safety appear in this manual and on the machine.
All messages of safety are identified by the words “DANGER”, “WARNING” and “CAUTION”.
These words mean the following :

⚠ DANGER	Indicates an imminently hazardous situation which, if not avoided, will result in a loss of life or serious injuries.
⚠ WARNING	Indicates a potentially hazardous situation which, if not avoided, could result in a loss of life or serious injuries.
⚠ CAUTION	Indicates a potentially hazardous situation which, if not avoided, may result in a minor or moderate injuries. It may also be used to alert against possible damage to the machine and its components.
Note	Supplementary explanation.

It is very difficult for us to forecast every danger that may occur during operation.
However, safety can be ensured by operating this machine according to methods recommended by Manitowoc.
While operating machine, be sure to perform work with great care, so as to not damage the machine, or let accidents occur.
Please continue studying this manual until proper operation is completely understood.

Reference Only

1.2 EXPLANATION OF WARNING LABELS IN THE MACHINE

Since the warning labels are installed in the machine and indicated with the three stages in the same way as the warning description, confirm the positions and contents of all warning labels first.
Put them to the practical use to secure safety when operating, checking and performing maintenance.

1.2.1 HANDLING OF WARNING LABELS IN THE MACHINE

1. When the warning label is damaged or stained, order it to the designated service shop.
2. Do not remove the warning labels.
3. When the surface of the warning label is soiled and difficult to be seen, wipe it cleanly.

Reference Only

1.2.2 LABEL LAYOUT

* Numbers in the drawings correspond with those in the label explanation detail after “1.2.3 DETAIL OF LABEL”

2

⚠ CAUTION

SET FREE FALL INCREASED SELECTOR SWITCH TO "LOCK" POSITION WHEN REEVING WIRE ROPE.

DRUM AUTOMATICALLY ROTATES WITHOUT LOAD WHEN BRAKE IS RELEASED WITH FREE FALL INCREASED SELECTOR SWITCH SET TO "RELEASE" POSITION.

GG20T01893P1

1

⚠ WARNING

- To prevent death or serious injury.
- Avoid unsafe operation or maintenance.
- Do not operate or work on this crane without first reading and understanding operator's manual and capacity charts.
- Keep manual in operator's cab.
- Attach Capacity charts to chain and store on hook provided in operator's cab.
- If operator's manual or capacity charts are lost, contact your nearest dealer for new ones.

FP20T01121P1

4

⚠ DANGER

TIPPING HAZARD!

When Operating With Retracted Crawlers

- DURING SETUP – do not swing over retracted crawlers with boom removed (or just boom butt installed) and counterweights installed.
- DURING OPERATION – comply with swing limitations given in Capacity chart.

GG20T01890P1

5

⚠ CAUTION

WHEN LOCKING THE BRAKE PEDAL, STEP ON THE PEDAL FULLY TO LOCK THE PAWL AT THE BOTTOM NOTCH.

2432T5113

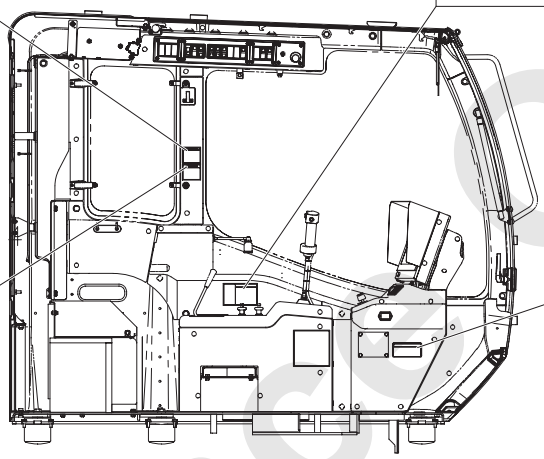

INSIDE VIEW (L/H)

11

⚠ CAUTION

DO NOT LIFT PEOPLE WITH THIS CRANE. FAILURE TO DO SO MAY CAUSE SERIOUS INJURY.

2432T4668

8

⚠ CAUTION

STRUCTUAL FAILURE

Gantry must be in high position

Read operators manual for boom connecting length

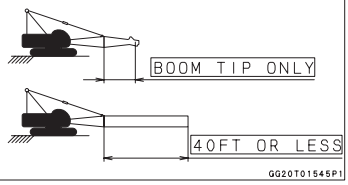

GG20T01545P1

10

⚠ CAUTION

THIS MACHINE CONTAINS ALLOY AND HEAT TREATED STEELS. DO NOT WELD OR APPLY HEAT WITHOUT CHECKING WITH YOUR AUTHORIZED DEALER. UNAUTHORIZED MODIFICATIONS MAY WEAKEN THE MACHINE.

2432T4671

3

⚠ DANGER

TIPPING HAZARD!

DO NOT LIFT WITH CRAWLERS RETRACTED

EXTEND CRAWLERS TO PROPER POSITION BEFORE LIFTING.
COMPLY WITH LIMITATIONS GIVEN IN CAPACITY CHARTS.

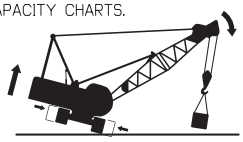

GG20T01891P1

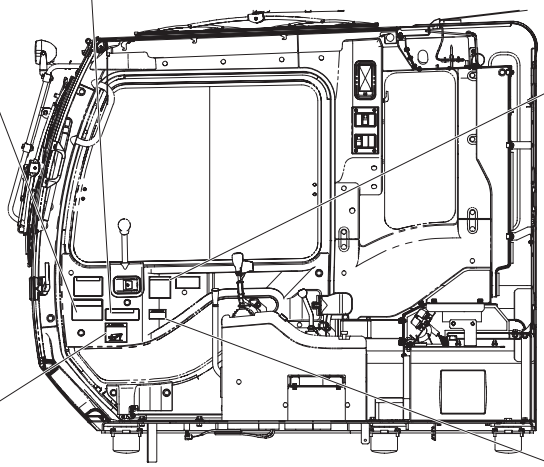

INSIDE VIEW (R/H)

9

⚠ DANGER

FALLING LOAD HAZARD!

OPERATING CRANE IN 「FREE FALL MODE」 MAY CAUSE LOAD TO FALL DUE TO OPERATIONAL ERROR.
OPERATE CRANE IN 「NEUTRAL BRAKE MODE」.

GG20T01892P1

Reference Only

17

⚠ DANGER

Do not stand on or under the counterweight during counterweight is moved by installing or removing. Failure to observe this precaution may result in serious injury or the loss of life.

JJ20T01326P1

17

⚠ DANGER

Do not stand on or under the counterweight during counterweight is moved by installing or removing. Failure to observe this precaution may result in serious injury or the loss of life.

JJ20T01326P1

19

⚠ DANGER

KEEP CLEAR OF SWING AREA

19

⚠ DANGER

KEEP CLEAR OF SWING AREA

19

⚠ DANGER

KEEP CLEAR OF SWING AREA

GG20T01557P1

CAB INSIDE VIEW (REAR)

6

⚠ DANGER

ELECTROCUTION HAZARD

THIS CRANE IS NOT INSULATED

- To avoid death or serious injury, keep all parts of this crane, rigging and materials being lifted at least 20ft(6m) away from all electrical power lines and equipment.
- Keep away from this crane if it is being operated near electrical power lines or equipment.
- Before operating this crane in vicinity of power lines or equipment, notify power utility company. Have power turned off.
- Follow instructions in Operator's Manual.

GG20T01539P1

13

⚠ WARNING

COMPRESSED NITROGEN

DO NOT WELD, FLAMECUT
DISPOSE IN FIRE, OR DISASSEMBLE.

GG20T01554P1

Machine front

ACCUMULATOR

14

ACCUMULATOR

CHARGING GAS PRESSURE.

3.4 to 3.7MPa
(493 to 537psi)

GG20T01540P1

30

⚠ DANGER

FALLING LOAD HAZARD!

Stay clear of this area
Place boom, block, on ground before performing maintenance

FP20T01122P1

Reference Only

20

⚠ WARNING

BURN HAZARD !

Do not touch.
Allow to cool before touching.

FP20T01115P1

Detail A (RADIATOR)

Machine front

24

⚠ WARNING

Rotating parts can cause personal injury。

Keep away from fan and belt when engine is running。
Stop engine before servicing。

YN20T01009P1

23

⚠ DANGER

FALLING LOAD HAZARD !

Engage gantry pins when gantry is in high position
Connect backhitch 「tension bars」 to rotating bed or counterweight when gantry is in low position

FP20T01123P1

22

⚠ WARNING

BURN AND CUTTING HAZARD !

Open only when engine is stopped.

JJ20T01506P1

16

⚠ DANGER

When lock pin is not installed, do not stand under gantry.

JJ20T01097P1

7

Tieoff for fall arrest harness.

GG20T01818P1

25

⚠ CAUTION

Moving parts.

JJ20T01096P1

A

20

⚠ WARNING

BURN HAZARD !

Do not touch.
Allow to cool before touching.

FP20T01115P1

19

⚠ DANGER

KEEP CLEAR OF SWING AREA

GG20T01557P1

6

⚠ DANGER

ELECTROCUTION HAZARD

THIS CRANE IS NOT INSULATED

- To avoid death or serious injury, keep all parts of this crane, rigging and materials being lifted at least 20ft(6m) away from all electrical power lines and equipment.
- Keep away from this crane if it is being operated near electrical power lines or equipment.
- Before operating this crane in vicinity of power lines or equipment, notify power utility company. Have power turned off.
- Follow instructions in Operator's Manual.

GG20T01539P1

Reference Only

15

ULTRA LOW SULFUR FUEL

GG20T01847P1

31

⚠ CAUTION

AUS 32 ISO 22241

Only fill this tank with specified DEF/AdBlue®. Do not fill with diesel fuel or water.

GG20T02126P1

12

⚠ WARNING

BURN HAZARD!

- Electrolyte can cause injury or blindness if it contacts skin or eyes.
- Wear eye protection and protective clothing when handling or servicing batteries.
- If electrolyte contacts skin or eyes, flush affected areas immediately with clean water and seek medical attention immediately.

GG20T01889P1

12

⚠ WARNING

PREVENT BATTERY EXPLOSION

- Batteries gives off hydrogen gases that can explode and cause personal injury.
- Keep sparks, open flames and cigarettes away from batteries.
- Keep metallic articles away from batteries.
- Keep all ventilation caps tightly secured.
- Never check charge by placing metal articles across battery terminals.
- Leave battery box open to improve ventilation when charging.

YN20T01001P1

Detail C (FUEL TANK)

Detail D (DEF/AdBlue® TANK)

Detail E (BATTERY)

18

⚠ WARNING

FALL HAZARD!

Surface may be slippery. Wear work positioning harness and tieoff when performing maintenance.

FP20T01114P1

16

⚠ DANGER

When lock pin is not installed, do not stand under gantry.

JJ20T01097P1

7

Tieoff for fall arrest harness.

GG20T01818P1

23

⚠ DANGER

FALLING LOAD HAZARD!

Engage gantry pins when gantry is in high position

Connect backhitch (tension bars) to rotating bed or counterweight when gantry is in low position

FP20T01123P1

View from B

B

C

D

E

25

⚠ CAUTION

Moving parts.

JJ20T01096P1

6

⚠ DANGER

ELECTROCUTION HAZARD

THIS CRANE IS NOT INSULATED

- To avoid death or serious injury, keep all parts of this crane, rigging and materials being lifted at least 20ft (6m) away from all electrical power lines and equipment.
- Keep away from this crane if it is being operated near electrical power lines or equipment.
- Before operating this crane in vicinity of power lines or equipment, notify power utility company. Have power turned off.
- Follow instructions in Operator's Manual.

GG20T01539P1

19

⚠ DANGER

KEEP CLEAR OF SWING AREA

GG20T01557P1

Reference Only

22

⚠ WARNING

PINCH HAZARD !

Open only when engine is stopped.

JJ20T01507P1

25

⚠ CAUTION

Moving parts.

JJ20T01096P1

22

⚠ WARNING

PINCH HAZARD !

Open only when engine is stopped.

JJ20T01507P1

26

CAUTION

Critical part inside.
Do not crush.

FP20T01116P1

F
G
F
G

21

COOLANT FILL

⚠ WARNING

Burn Hazard!

Do not remove coolant fill cap while coolant is hot. After coolant cools:
1. Place a heavy cloth or other protective covering over fill cap.
2. DO NOT DEPRESS fill cap.
3. Turn cap counterclockwise until it stops.
4. Wait for pressure (indicated by hissing sound) to escape completely.
5. When hissing stops, depress cap, turn counterclockwise, and remove.

GG20T01555P1

H
H

7

Tieoff for fall arrest harness.

GG20T01818P1

20

⚠ WARNING

BURN HAZARD !

Do not touch.
Allow to cool before touching.

FP20T01115P1

Section F-F (L/H)

Section G-G (R/H)

Section H-H

Reference Only

29

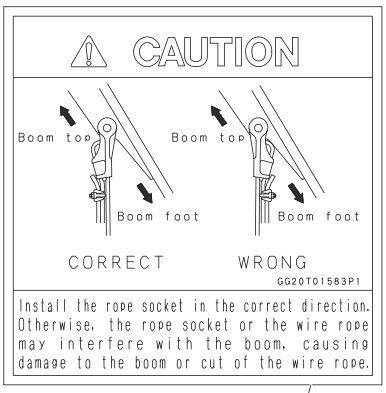

28

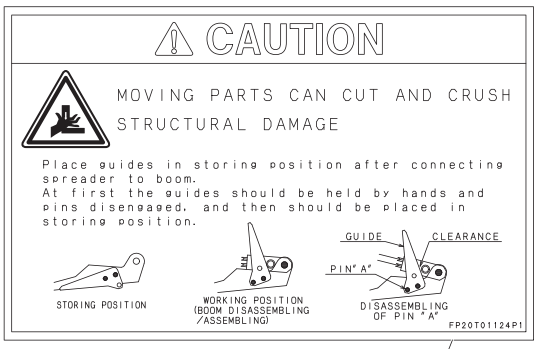

27

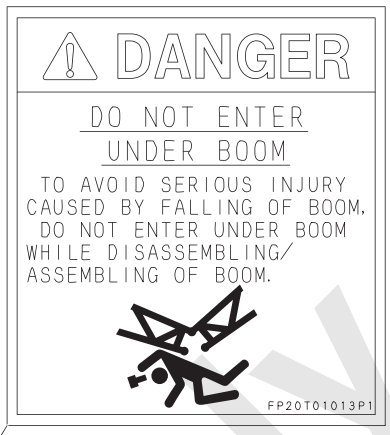

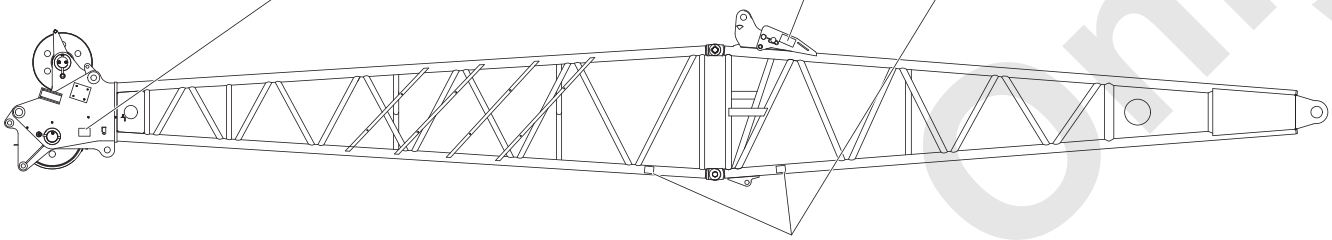

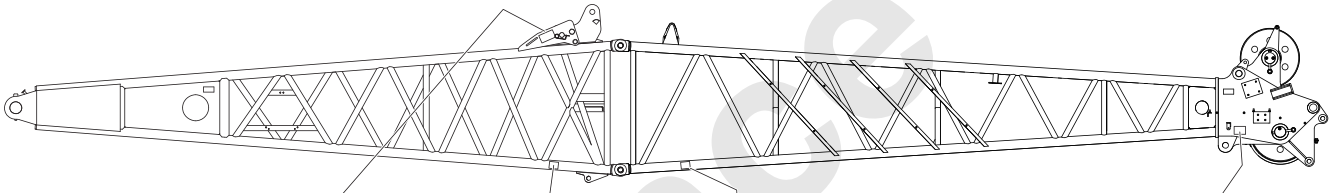

BOOM

28

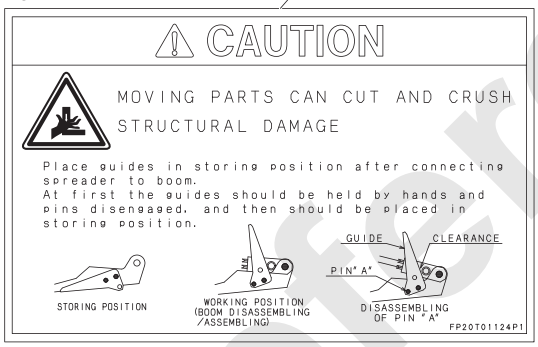

27

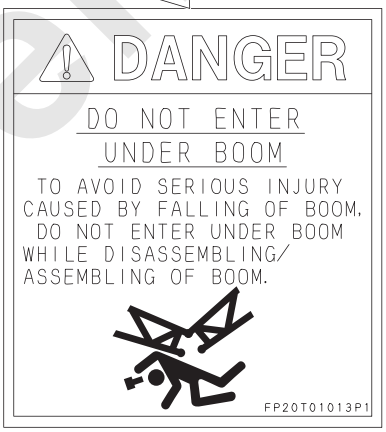

29

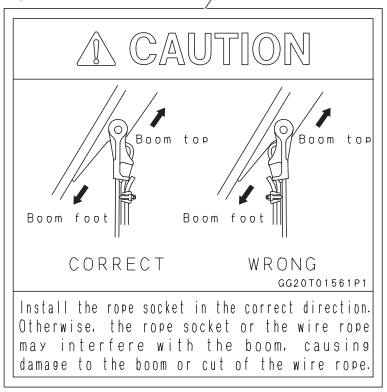

Reference Only

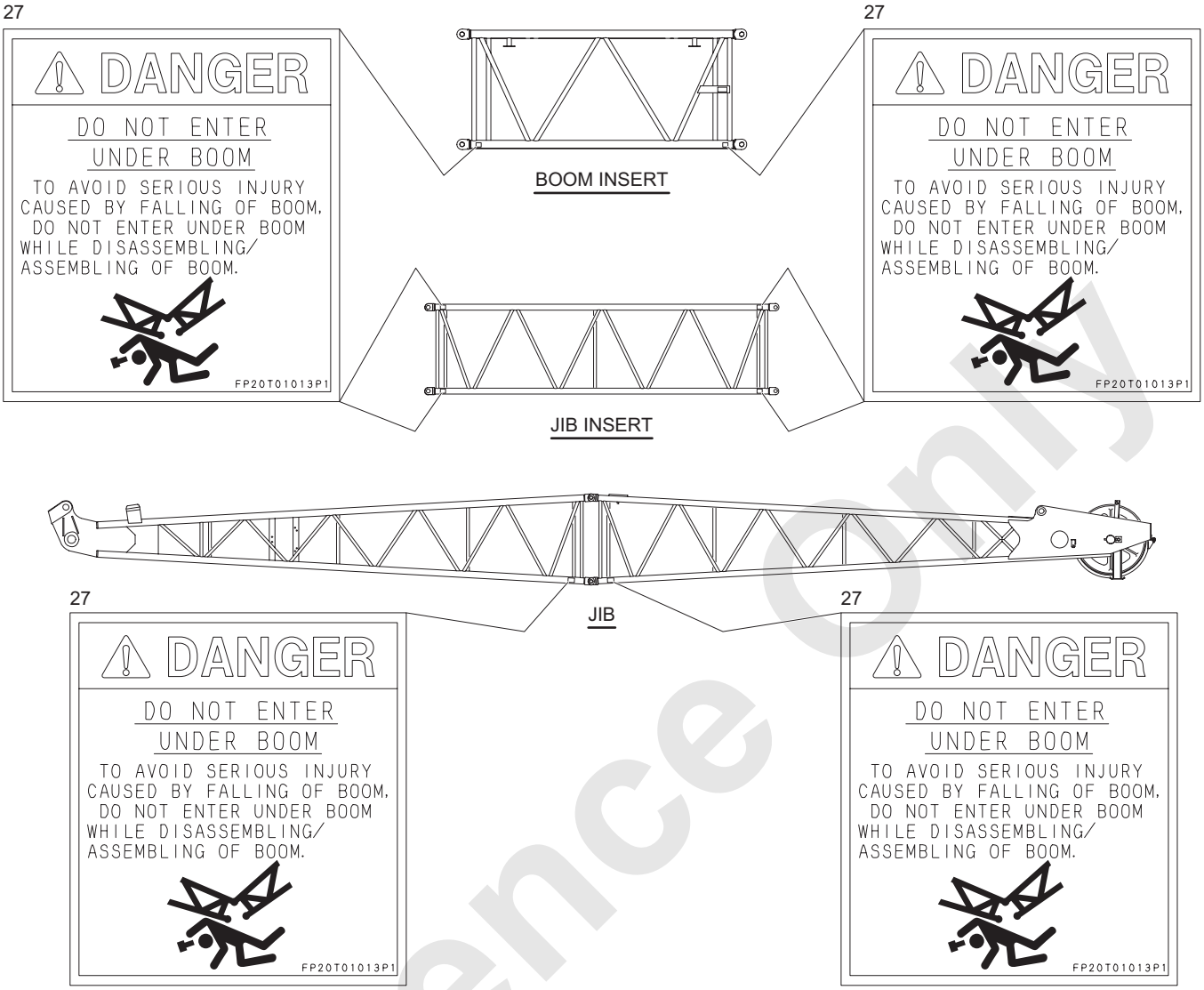

Reference Only

1.2.3 DETAIL OF LABEL

1. Ensure to read the operators manual before operation / handling / assembly / disassembly / transportation / inspection / maintenance of the machine.

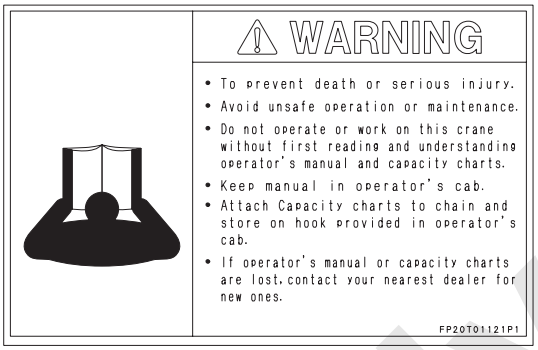

2. If the free fall speed select switch is in speed increase side and the brake is released and the drum may rotate automatically to lowering side even without lifting load and wire rope may be paid out to lower the hook and rough spooling may be caused occur.
   When paying out the wire rope from the drum, ensure to set the free fall select switch to normal side.

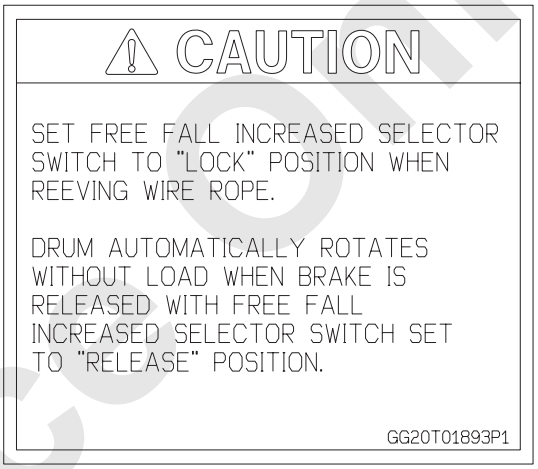

3. The crane may turn over during work based on machine condition.
   Install the proper amount of the counterweight and secure them to make proper machine configuration.

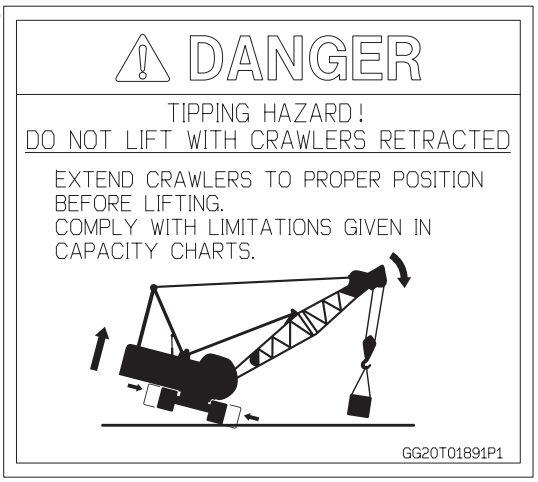

Reference Only

4. If machine swings or is assembled / disassembled with crawler retracted, main machinery may turn over to rear side.
   Read the operator's manual carefully and set the crane to the proper configuration.

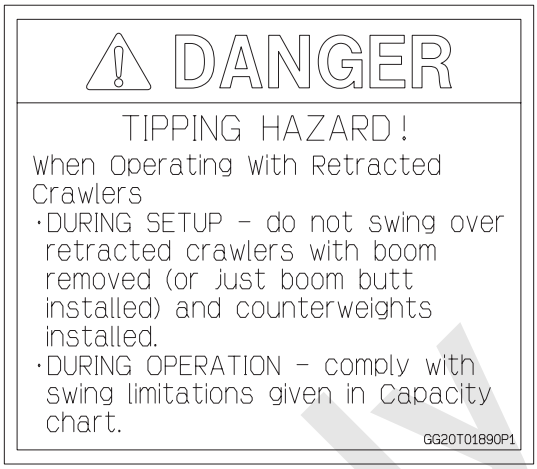

5. If the brake pedal lock is not completely engaged, lifting load or hook may be lowered unexpectedly and is very dangerous.
   When locking the brake pedal, press the brake pedal fully and confirm that the pedal is locked completely.

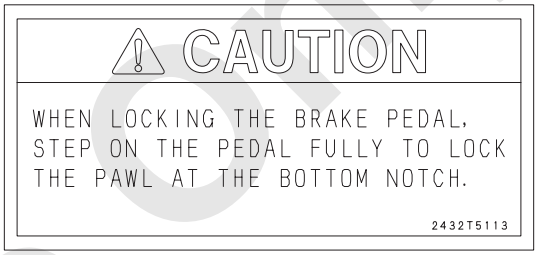

6. During crane work if the boom comes to close to the tower or power lines, electric shock may hit the crane.
   Keep the boom away from the tower or power lines for safety.

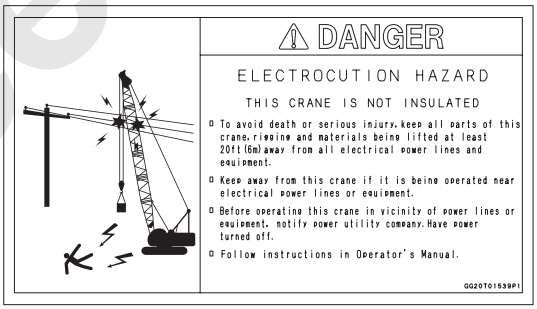

7. When work is done on the upper surface of the guard or counterweight, person may fall off by mistake.
   Ensure to engage the safety hook on the specified place.

Reference Only

8. When the boom is assembled, disassembled, boom self erection / self lowering or crane work with the low gantry, the gantry or boom may be damaged and may fall off.
   Raise the gantry to the proper position for work.

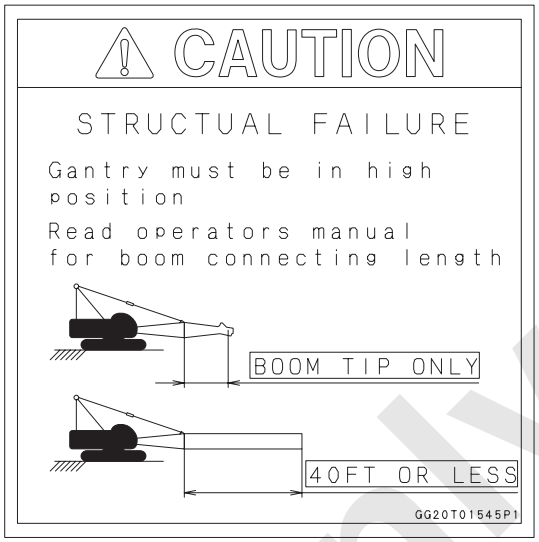

9. Free fall work of load may cause dropping the load by mishandling.
   Use power lowering of load in the crane work.
   (Even on neutral free side, power lowering is possible by turning the lever to lowering side.)

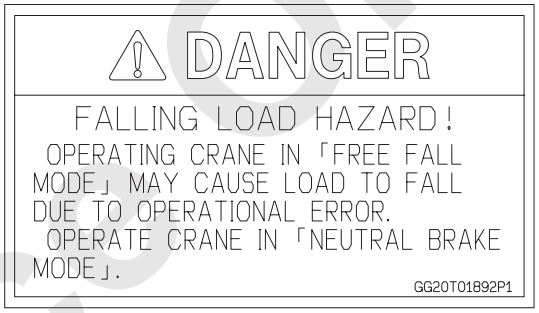

10. This machine contains alloy and heat treated steels.
    Do not weld or apply heat without checking with your authorized dealer.
    Unauthorized modifications may weaken the machine.

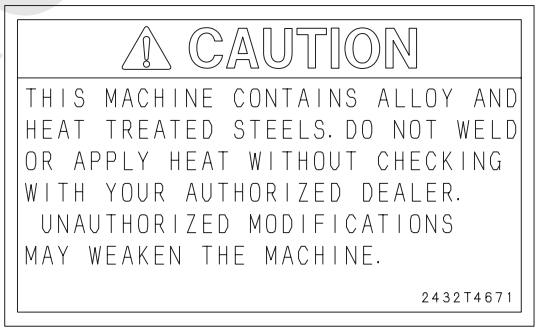

11. Do not lift people with this crane.
    Failure to do so may cause serious injury.

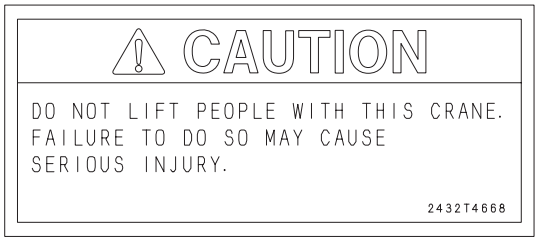

Reference Only

12. Wrong handling of battery may cause burns, blindness or explosion by inflammation.

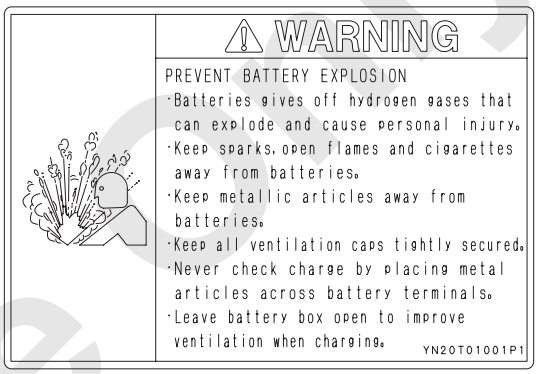

13. If accumulator is handled in wrong way, burns, loss of eyesight, explosion may be caused.
Take extra care in handling accumulator.
(Do not weld, flame cut, dispose or disassemble.)

14. The accumulator is charged with high pressure nitrogen gas.
Charge the nitrogen gas within the specified pressure.

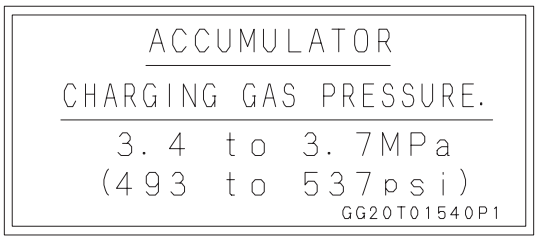

15. Using the fuel other than the specified diesel fuel may cause engine failure, fire or explosion.
Ensure to use the diesel fuel in the fuel tank.
Use ultra low sulfur diesel fuel only.
(S50 : sulfur content lower than 50 ppm)

Reference Only

16. After raising the gantry, ensure to insert the gantry fixing pin.
    Otherwise the gantry may come off and the boom may drop off.

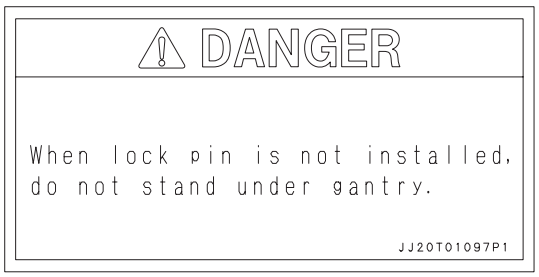

17. Handling the counterweight in wrong way is very dangerous.
    Never allow any person to enter under the lifting counterweight.

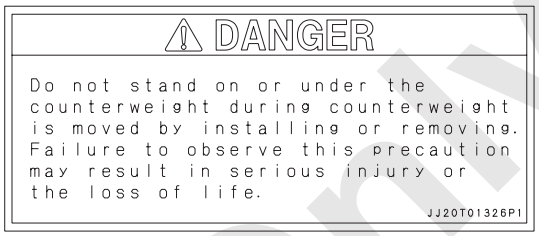

18. When working on the upper surface of the guard, person may fall off the upper surface of the guard.
    During high place work on the upper surface of the guard, do not come close to the guard side face to prevent falling off.
    During work on the upper surface of the guard, ensure to wear safety belt and hook the safety belt on the upper machinery and firmly stand on the guard.

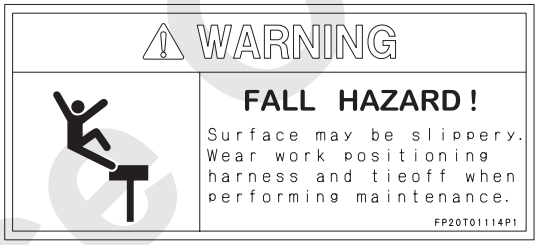

19. While the upper machinery is swinging, person may be crushed with the upper machinery.
    Never allow anybody to enter the swing range.

Reference Only

20. During engine running or straight after the engine is stopped, hydraulic oil tank, engine and muffler are hot.
    Touching them may cause burns.
    Do not touch the hot area.

21. During engine running or right after the engine is stopped, inside of the radiator becomes high pressure and hot.
    Person may get burns by hot water blow out when taking off the radiator cap.
    Take extra care of opening or closing of the radiator cap.

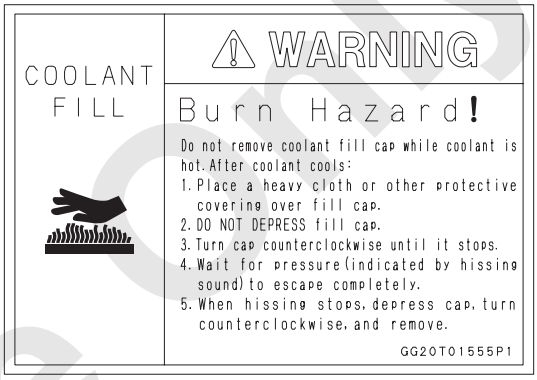

22. When inspection or work is done by removing the drum flange cover, serious injuries may be caused if the drum rotates unexpectedly.
    Stop the crane and then remove the drum cover.

23. When the machine is transported with the low gantry, connect the tension bar to the revolving frame or counterweight.

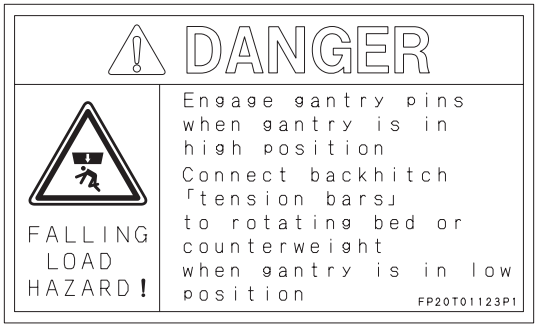

Reference Only

24. When working on the engine area for inspection and maintenance, person may be entangled with the fan belt and may get injured if the engine is running.
    Stop the engine when inspection or maintenance work is done.

25. There are some moving parts nearby.

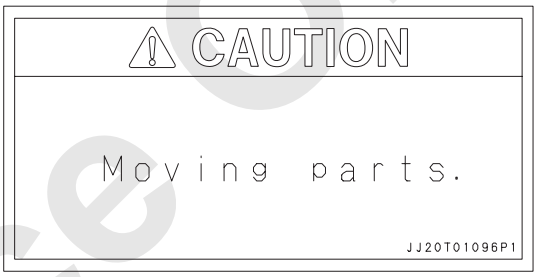

26. This is a connector cover of electrical wiring of safety device.
    Do not step on and crush.

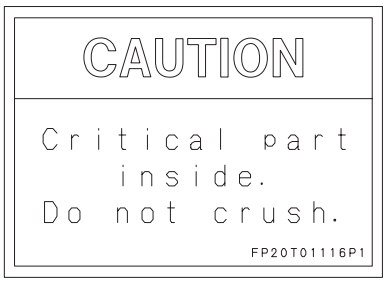

27. Taking wrong procedure in boom assembly or disassembly may cause boom falling off and person may get injured.
    Do not allow any person to enter the inside or under the boom during assembly or disassembly.

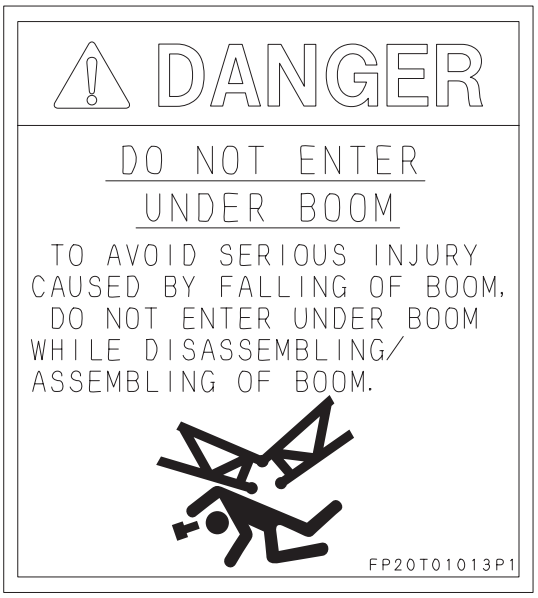

Reference Only

28. Taking wrong method in using the spreader guide installed on the boom base may damage the spreader guide.
    Set the spreader guide to the stowed position except when the upper spreader is connected is connected to the boom base.

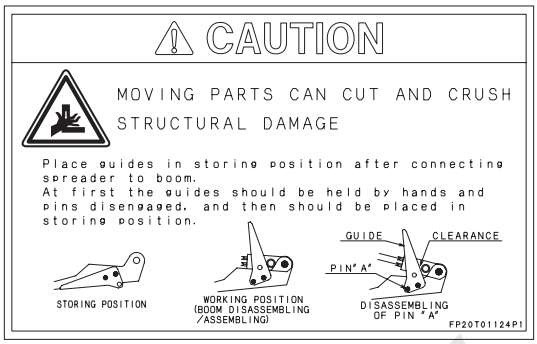

29. Taking the wrong installing direction when the rope sockets are installed to the boom tip and jib tip, may damage the boom or may break the wire rope.
    Install the rope socket in the proper direction.

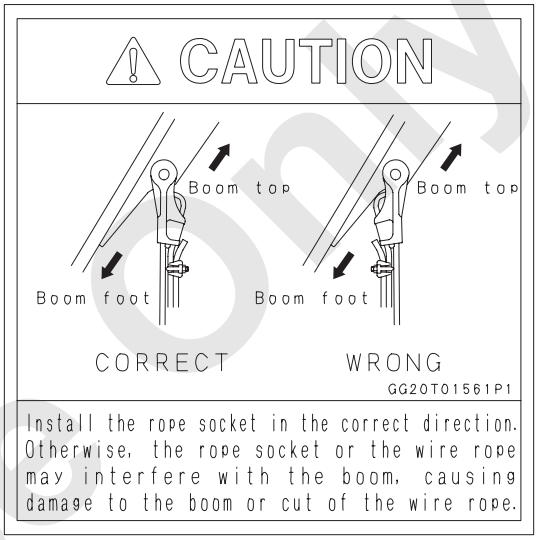

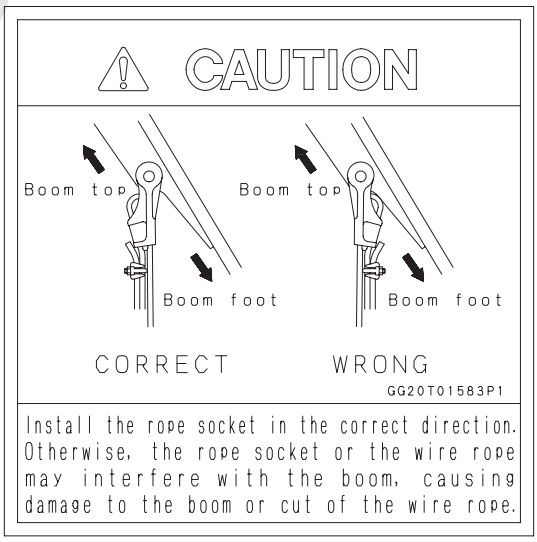

30. Free fall work of load may cause dropping the load by mishandling.
    Use power lowering of load in the crane work.
    (Even on neutral free side, power lowering is possible by turning the lever to lowering side.)

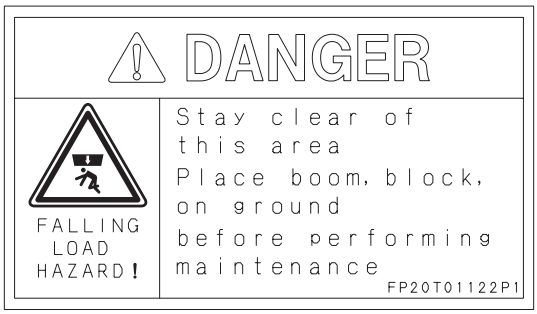

Reference Only

31. When fill the water and/or diesel fuel etc. to this tank is danger and may lead to the faults.
    Fill the specified DEF/AdBlue® only.

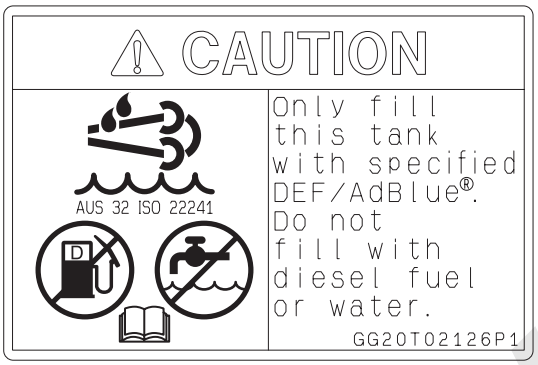

Reference Only

1.3 SAFE OPERATING PRACTICES FOR MOBILE CRANES

INTRODUCTION

Because cranes have the ability to lift heavy loads to great heights, they also have a potential for accidents if safe operating practices are not followed.
This book will help you prevent accidents that could result in a injury, death, or property damage.

General safe practices for working on machinery must be followed as well as the safe operating practices recommended here.

Reference Only

OPERATOR'S RESPONSIBILITY

The operator is the best safety feature in any crane.
Safety must always be the operator's most important concern.
He must refuse to operate when he knows it is unsafe and consult his supervisor when safety is in doubt.

He must read and understand the Operator's Manual and see that the machine is in proper order before operating.

He must understand how to read the rating plate and know that his machine can safely lift each load before attempting to lift it.

He must never lift a load without knowing the length of the boom, the weight of the load, and the load radius or boom angle.

Never attempt to operate the crane at conditions exceeding those shown on the rating chart.
Such operation can cause tipping or structural failure of the crane that can result in a damage, injury, or loss of life.

He must be alert, physically fit, and free from the influences of alcohol, drugs, or medications that might affect his eyesight, hearing, reactions, judgment.

He must see that unnecessary people, equipment, and material are kept out of the work area.
The area around the machine should be properly barricaded.

When an operator's vision is restricted or when operating in hazardous places such as near electrical power lines or around people, a signalman must be used.
Because the operator is not always in the best position to judge distances and can not see all parts of the job site, a signalman may also be necessary at other times.
Operators must understand standard crane signals and take signals only from designated signalmen.

Reference Only

SIGNALMAN'S RESPONSIBILITY

The primary duty of a signalman is to assist the operator in safe and efficient operation.
Operators depend on designated signalmen to assist them in making movements without endangering people or property.

Signalmen must have a clear understanding of the work to be done so that they can safely coordinate each job with operators and other crew members.
Signalmen must place themselves where they can be clearly seen and where they can safely observe the entire operation.
Standard crane signals must be used unless other methods of signaling, such as two way radios or flags have been agreed upon.

CREW MEMBER'S RESPONSIBILITY

Any unsafe condition or practice must be corrected or reported to the job supervisor.

Everyone who works around the crane, including riggers and oilers, must obey all warning signs and watch out for his own safety and the safety of others.
Crew members setting up machines or handling loads are expected to know proper machine erection and rigging procedures.

Watch for hazards during operations and alert the operator and signalmen of dangers such as power lines, the unexpected presence of people, other equipment or unstable ground conditions.

Reference Only

MANAGEMENT'S RESPONSIBILITY

See that operators are trained, competent, physically fit and, if required, licensed.
Good vision is required, as are good judgment, coordination and mental ability.
Any person who lacks any of these qualities must not be allowed to operate a crane.

Signalmen must have good vision and sound judgment, know standard crane signals and be able to give signals clearly.
They must have enough experience to be able to recognize hazards and signal the operator to avoid them.

Riggers must be trained to determine weights and distances and to select proper lifting tackle.
Rigging is a complex subject far beyond the scope of this manual.
It is management's responsibility to employ qualified riggers.

Crew members must be given specific safety responsibilities and instructed to report any unsafe conditions to their supervisors.

Reference Only

PLANNING THE JOB

Most accidents can be avoided by careful job planning. The person in charge must have a clear understanding of the work to be done and equipment capabilities.
He must consider all dangers at the job site, develop a plan to do the job safely, and then explain the plan to all concerned.
Factors such as these should be considered :

- What crew members are needed and what responsibilities will they be given?
- What is the weight of the load to be lifted, the lift radius, boom angle, and the rated capacity of the crane?
- How will the signalmen communicate with the operator?
- What equipment is required to do the job safely? Is a crane the best equipment for the job?
- How can the equipment be safely transported to the job site?
- Are there gas lines, electrical power lines or structures that must be moved or avoided?
- Is the surface strong enough to support the machine and load?
- How will loads be rigged?
- What special safety precautions must be taken if a crane must travel with a suspended load or if more than one crane is needed to lift a load?
- Are unusual weather conditions such as winds or extreme cold expected?
- What steps will be taken to keep unnecessary people and equipment safely away from the work area?
- How can the crane be positioned to use the shortest boom and radius possible?
- Is “OFF LIMIT” sign posted in the swing radius area?

Reference Only

OPERATOR'S CHECK LIST

The operator must make a safety check before starting to work each day to see that the machine is in proper order.
Some things to check are :

- Check the machine log book to see that periodic maintenance and inspections have been performed and all necessary repairs made.
- Check the operation of the boom hoist kickout, boom angle indicator, back up alarms, and other safety devices.
- Carefully inspect load bearing parts such as wire rope, (load lines, boom hoist cable, suspension lines), boom, outriggers, hooks, and rigging.
- Inspect the crane for any missing bolts, nuts or pins and any cracked or broken components.
- Be sure no unauthorized field modifications have been made, such as counterweights increased or decreased and booms that have been improperly repaired.
- Check for fuel and hydraulic oil leaks.
- After starting the engine, check all gauges for proper readings.
- Test all controls for proper operation.
- Check brakes and clutches.
  Test load brakes by lifting a load a few inches off the ground and holding it.

Reference Only

OPERATING PRECAUTIONS

The following recommendations represent our experience in regard to the most likely causes of personal injuries and damage to equipment.
Careful observance of the following recommendations will prevent the majority of common accidents.

1. Mistakes in calculating lifting capacity can cause accidents.

   Several factors must be considered including :

(1) Load radius (the distance between the center of the crane rotation to the center of the load).
Note that the radius will increase when the load is lifted.
(2) Weight of the load, hook, and rigging.
(3) Boom length, jib, parts of line, and operating area (side, rear).
Use the next lower rated capacity when working at boom length or radii between the figures on the rating chart.
It is dangerous to guess the capacity for boom length or radii between those listed on the rating plate.

Trying to lift a load without knowing whether it is within the rated capacity while expecting the crane to start to tip to warn of an overload is very dangerous and should never be done.
Cranes may suddenly tip over or collapse.

Always operate within the rated capacity.
The operator must reduce the load under adverse field conditions until, in his judgment, the machine can safety handle the lift.
(See operating precautions #3, 10, 16, 19, 27, and 28.)

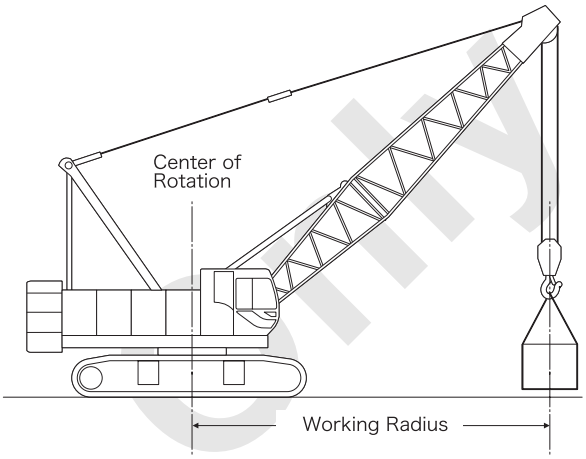

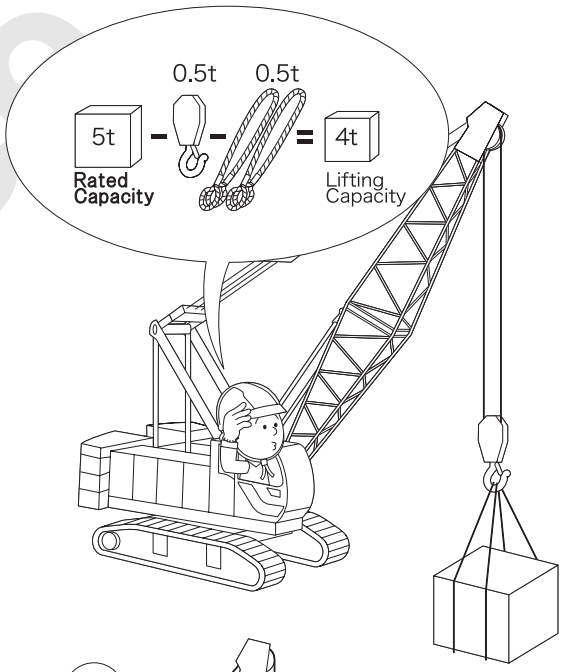

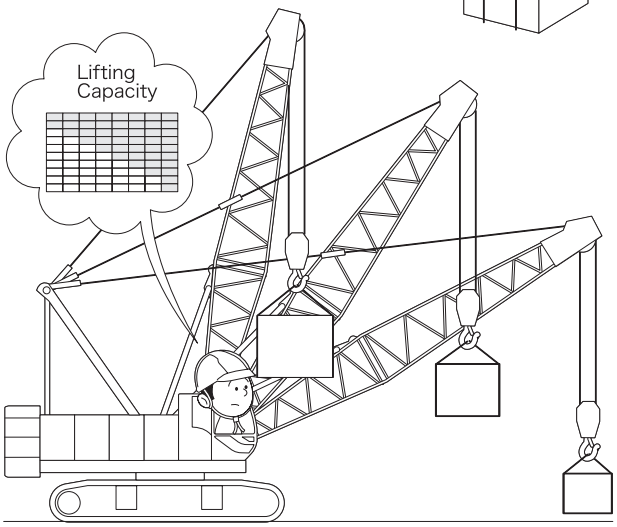

Reference Only

2. Cranes may tip over or collapse if the operating surface cannot support their weight.
   Timber mats, steel plates or concrete rafts may be needed under crawlers to distribute the load under the crane so that the bearing strength of the ground is not exceeded.
   Determine the load bearing capacity of the ground or other surface on which machines will be operating.
   Be sure cranes are adequately supported.
   Avoid soft or unstable ground, sand, areas with high water tables, and partially frozen ground.
   When machines are working near trenches, the trenches should be shored or sloped to prevent cave-ins or slides.

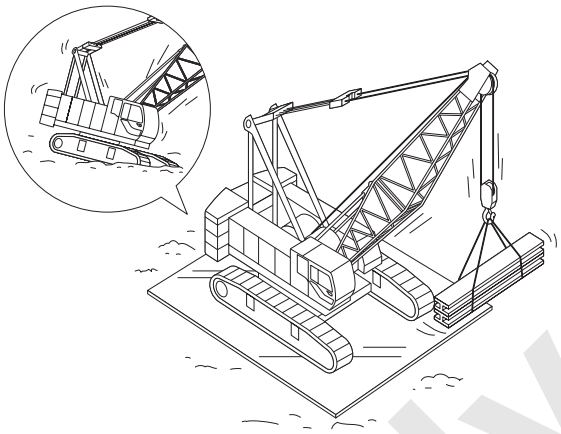

3. The rated capacity of a crane is determined with the crane leveled within ±0.5 degrees of grade (1 foot drop or rise in 100 foot distance).
   Out of level more than ±0.5 degrees will drastically reduce the lifting capacity.
   Be sure cranes are level.

4. People can be crushed by the scissors-like action of the upper rotating on the lower.
   Stay away from rotating cranes.
   Erect barricades to keep people away.
   Take the time to determine that these areas are clear before swinging.

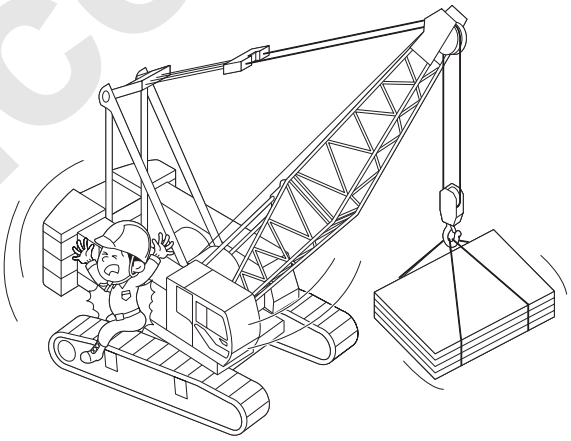

Reference Only

5. People can be crushed by the rear (counterweight) of the machine if there is not enough room for it to swing.
   Position machines so that people cannot be trapped between the counterweight and other obstructions.

6. Many people have been injured when riding crane hooks or loads.
   They have no control over how they are handled and no protection from impacts or falls.
   Small mistakes can be fatal.

   Never permit anyone to ride loads, slings, hooks, etc., for any reason.

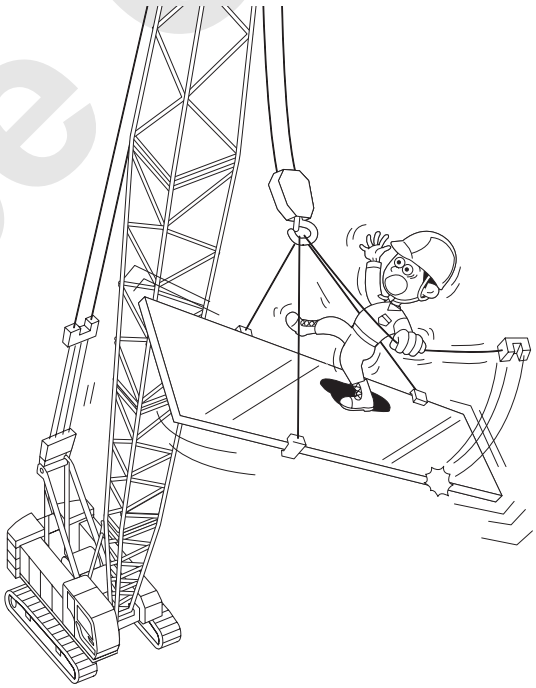

Reference Only

7. Power electrical lines have killed or serious injured people working around cranes and excavators.
   These accidents can be avoided by following a few simple rules.

   Always determine whether there are power lines in the area before starting any job, assembly and disassembly.
   OSHA regulations require at least 3.05 meter (10 feet) of clearance from lines carrying 50,000 volts or less.
   Greater clearances are required for lines with higher voltages.
   Some states require greater clearances than OSHA.
   Safety requires that you stay as far as possible from power lines and never violate minimum clearances.

   Always take these precautions if power lines are present.

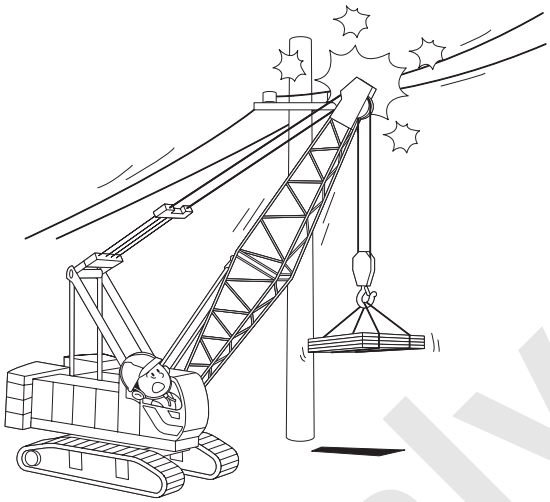

Reference Only

(1) Hold a job site meeting and make all people concerned aware of work procedure.
(2) For tagline work, ensure to use nonconductive type tagline rope.
(3) Ensure to use swing angle limiter (if available).
(4) Ensure to use visual signs such as an elevated warning line or barricade.
(5) Ensure to use boom angle and work radius limiter.
(6) Notify the electrical power company before beginning work.
(7) You and the power company must take specific precautions.
These may include locating cranes and materials away from electrical power lines, de-energizing and grounding lines, rerouting lines, removing barricading lines, and insulating lines with rubber sleeves.
(8) Use a signalman to maintain a safe distance between any part of the machine or load and electrical power lines.
The operator is not in the best position to judge distances.
(9) Warn people to stay away from the machine and load at all times.
If the load must be guided into place, ask the power company about special precautions such as insulated poles or hot sticks.
(10) Slow down.
Give yourself time to react to problems and to double check the distance between electrical power lines and any part of the machine or load.

Operation near high voltage power lines

Normal voltage : kV (Phase to Phase)	Minimum required clearance : m (ft)
UP to 50	3.05 (10)
Over 50 to 200	4.60 (15)
Over 200 to 350	6.10 (20)
Over 350 to 500	7.62 (25)
Over 500 to 750	10.67 (35)
Over 750 to 1,000	13.72 (45)
Over 1,000 kV As established by the utility owner/operator or registered professional engineer who is a qualified person with respect to electrical power transmission and distribution.	
NOTE The value that follows “to” is up to and includes that value. For example, over 50 to 200 means up to and including 200 kV.	

Operation in transit with
no load and boom or mast lowered.

Normal voltage : kV (Phase to Phase)	Minimum required clearance : m (ft)
Over UP to 0.75	1.22 (4)
Over 0.75 to 50	1.83 (6)
Over 50 to 345	3.05 (10)
Over 345 to 750	4.87 (16)
Over 750 to 1,000	6.10 (20)
(Extracted from ASME/ANSI Standard B30.5-2004) SAFE MAINTENANCE PRACTICES	

Required clearances for operation near high voltage power lines

Reference Only

Careful planning and supervision offer better protection than any known hardware.
Insulated boom cages, proximity warning devices, and insulating links have limitations and can fail without warning.
Insulated boom cages and links only protect part of the crane and can break down electrically if contaminated with dust and water.
Operation of proximity warning devices can be affected by different arrangements of power lines, the movement of trucks, materials, and the crane itself, and other influences.
Relying on any of these devices could be dangerous because users may think they are providing protection when in fact they are not.
If any part of the crane or rigging contacts a high voltage line, the safest procedure for the operator is to stay at his post until the contact is cleared, or the power has been shut off.
Do not allow anyone on the ground to touch the machine.
If the operator must leave the machine, he should jump off, rather than climb off.

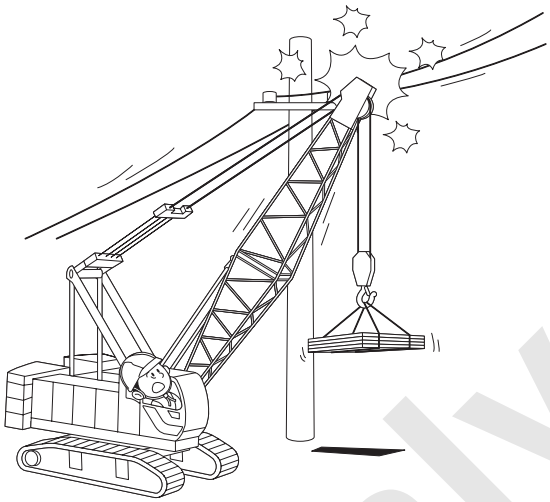

8. The load line can break if the hook block contacts the end of the boom.
This is called “two blocking”.
Two blocking, for example, can be caused by hoisting the hook into the end of the boom or lowering the boom without paying out load line.
Two blocking can pull jibs and lattice booms over backwards or cause structural damage at boom or jib points.
Always keep space between the hook block and boom point.
Lower the hook when lowering the boom.

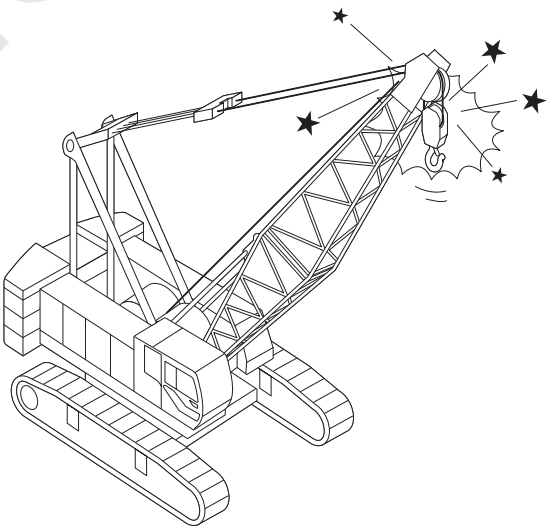

Reference Only

9. People can be injured if the hook, boom, load or outriggers are moved when personnel are nearby. Make sure everyone is clear before moving the hook, boom, load or outriggers.
   Do not move loads over people.
   Do not allow the load to bump or catch on anything.

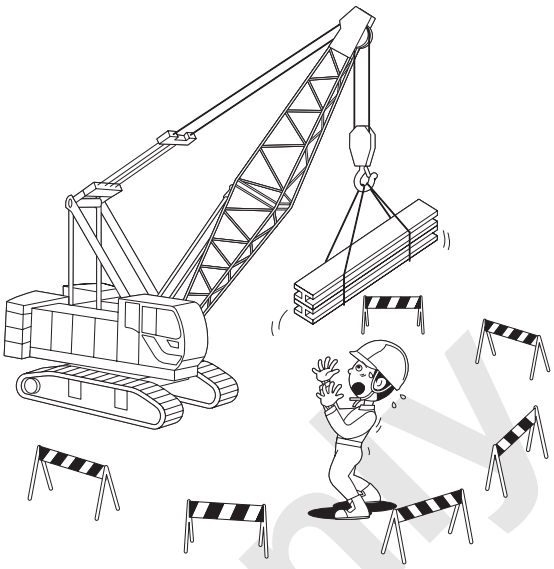

10. Rapid swings or sudden starts and stops can cause the hook and attached load to swing out of control.
    Always start and stop movements smoothly and swing at speeds that will keep the load under control.

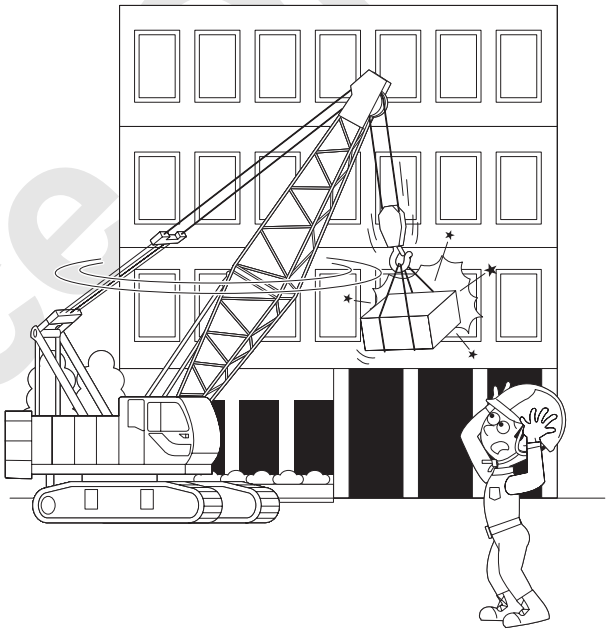

Reference only

11. Dirty windows, darkness, bright sunlight, fog, rain and other conditions can make it difficult for the operator to see.

    Keep windows clean.
    Do not operate if you cannot see clearly enough to operate safely. Replace cracked or broken glass as soon as possible.

    There are several specific safety signs on your machine.
    Their exact location and description of the hazard are reviewed in this section.
    Please take the time to familiarize yourself with these safety signs.

    Make sure that you can read all safety signs. Clean or replace these if you cannot read the words or see the pictures.
    When cleaning the labels use a cloth, water and soap.
    Do not use solvent, gasoline, etc.

    You must replace a label if it is damaged,missing or cannot be read.
    If a label is on a part that is replaced, make sure a new label is installed on the replaced part.

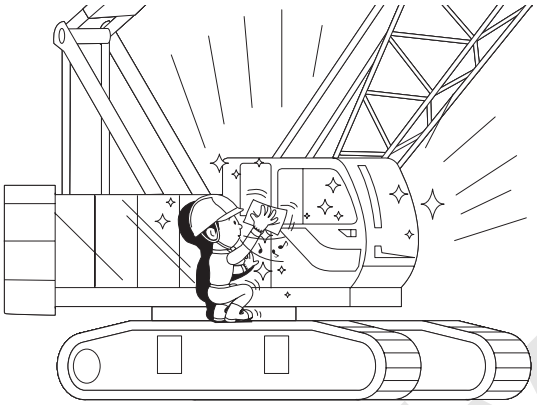

12. Even light winds can blow loads out of control, collapse booms, or tip cranes.
    Winds aloft can be much stronger than at ground level.

    Do not lift loads if winds create a hazard.
    Lower the boom if necessary.

    Moderate winds may create a hazard for long booms or loads with large surface areas.

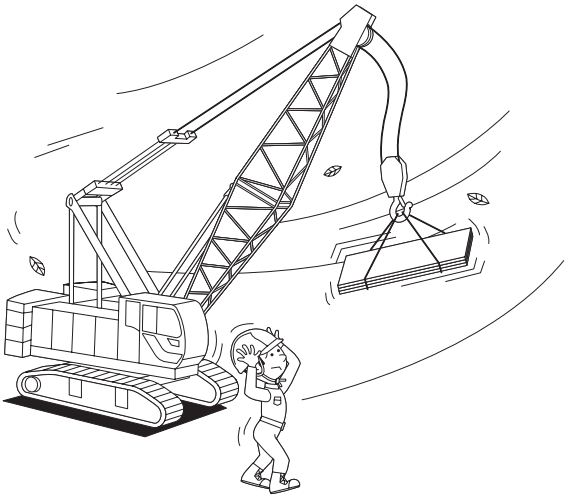

Reference Only

13. Carelessness in getting on and off equipment can result in a serious injuries.
    Always wait until the machine has stopped.
    Do not jump on or off.
    Always use both hands and make sure you have good footing.

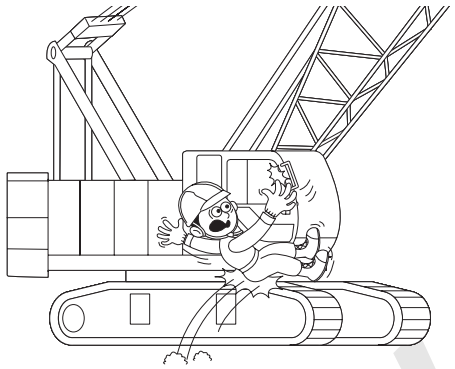

14. Slippery floors and steps, tools, trash, or other loose items can cause falls.
    Keep the machine clean and dry.

15. Damaged crane booms may collapse.
    Lattice type booms will be weakened by damaged chords, bent or missing lacings, or cracked welds. Inspect the crane boom daily for damage.
    Do not use damaged booms.

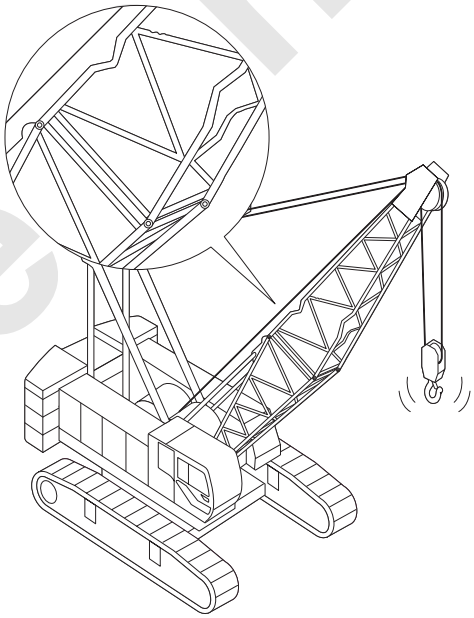

⚠ CAUTION

Due to the high strength steels used in boom and jibs, special repair procedures are required.
Contact authorize Manitowoc distributor for repair.

16. Crane booms can collapse if side loaded (pulled sideways).
    Typical causes of side loading are rapid starts and stops while swinging, dragging a load sideways, winds, or lifting when the crane is not level.

    Take care to avoid side loading.

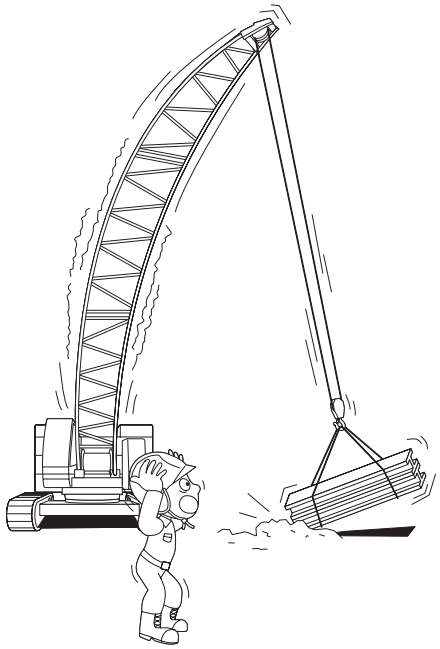

Reference only

17. If the load strikes the boom or the boom hits a building or other object, the boom may collapse. Never let the load or any other object contact the boom.

18. Boom suspension lines will stretch when the load is lifted and contract when the load is released.
    At high boom angles this may be enough to pull the boom backwards over the crane or collapse the boom stops.

    When releasing loads be sure the boom never tightens against the backstops.
    Release loads slowly booming out if necessary while releasing.

19. The load will swing out of control if it is not directly beneath the boom point when lifted.
    This can side load the boom and may cause the crane to tip or collapse.

    Always place the boom point directly above the load when lifting.
    Make certain all personnel stand clear of the load as it is lifted.

20. Trying to lift a load which is stuck, frozen or attached to something else may result in a tipping, boom collapse or other damage.
    Be sure that loads are free before lifting.

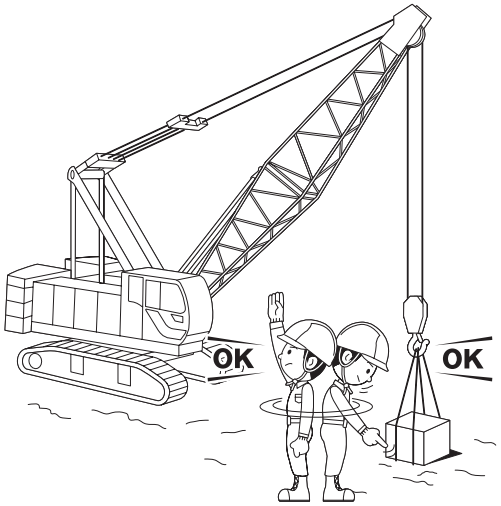

Reference Only

21. If there is not enough wire rope on the drum the rope can snap loose.

    Keep at least 3 full turns of wire rope on drums when operating.

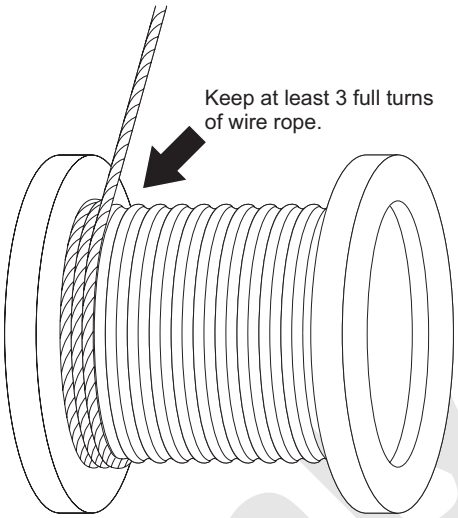

22. If foot brake pedals and locks are equipped on the crane, always keep your feet on the pedals while foot pedal brake locks are in use.

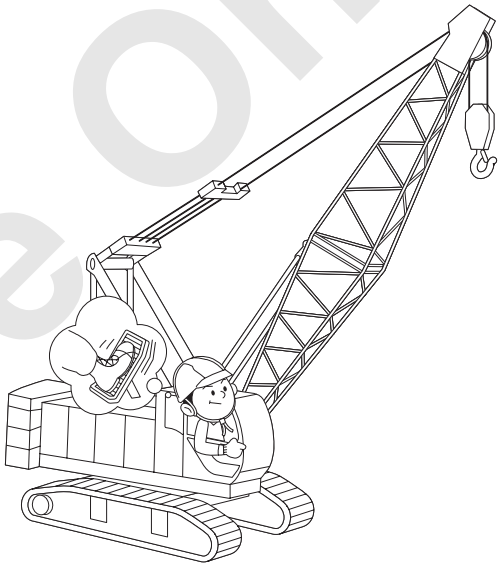

23. Trying to repair or adjust equipment with a suspended hook or load or with the boom raised could release machinery and let it move unexpectedly.
    Always lower the load to the ground and the boom onto proper cribbing before doing maintenance or repair work.

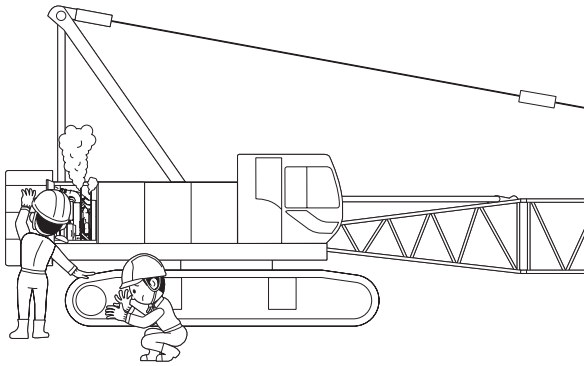

Reference Only

24. Pressure in hydraulic systems can be retained for long periods of time.
    If not properly released before maintenance people attempt to work on the hydraulic systems, this pressure can let machinery move or cause hot oil and hose ends to shoot out at high speed.
    Release system pressure before attempting to make adjustment or repairs.

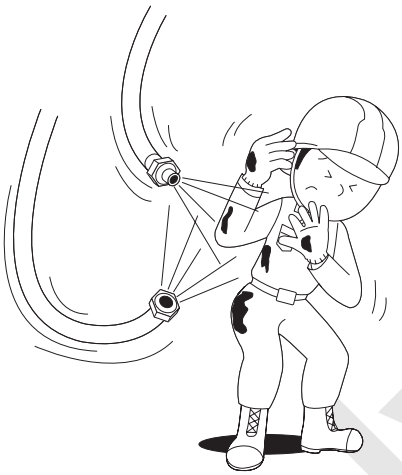

25. Pin-connected booms and jibs may fall if not properly supported when removing pins.
    Make sure both ends of each boom and jib section are supported and the boom suspension lines completely slacked off before removing pins.
    Never stand on, inside, or under booms or jibs during assembly or disassembly.

26. As with all heavy equipment, care must be taken when cranes are driven (traveled), whether on or off the job site.
    Watch for people, electrical power lines, low or narrow clearances, bridge or road load limits, and steep hills or uneven terrain.
    Use a signalman in close quarters.
    Know the height, width and weight of your machine.
    Set swing brake or lock before traveling.

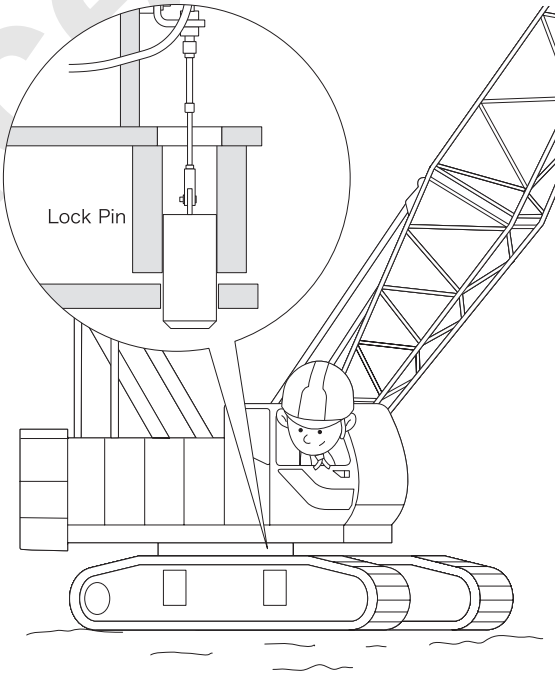

Reference Only

27. Load ratings for cranes are based on the machine being level and operated properly so that dynamic effects of operation do not increase the loadings on the crane.
    Traveling a crane with a long boom or with a load suspended involves special hazards including the increased possibility of side loading or tipping.

    Because of the many variables involved in pick and carry operations, the user must evaluate conditions and take appropriate precautions such as these :

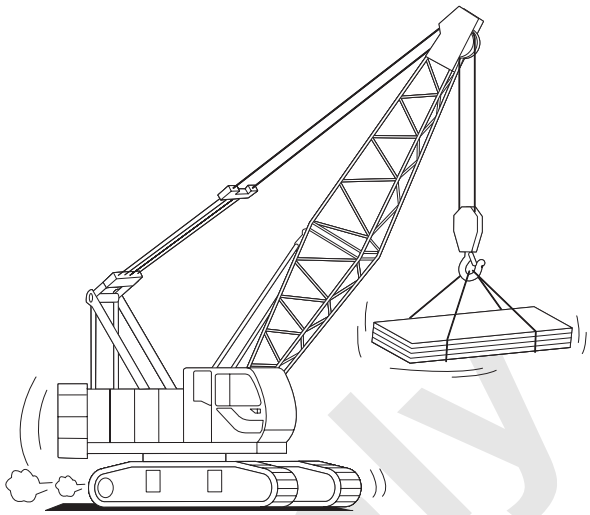

- Follow the travel precautions listed in rule 26.
- Check the rating plate for limitations.
- Position the boom in line with the direction of travel.
- Reduce the maximum load while traveling to reflect operating conditions.
  The safe load will vary depending on speed, crane, and other conditions.
- Travel slowly and avoid sudden stops and starts.
- Do not steer.
  Otherwise a lifting load may swing and lateral load would be applied on the boom and would be dangerous.
- Avoid backing away from the load.
  This could increase the radius and cause the machine to tip over.
- Use tag lines to keep loads under control.
- Keep the load close to the ground.
- Use the shortest boom possible.

Reference Only

28. Using two or more cranes to lift a load involves many hazards not normally encounted in single crane lifts.
    Multi-crane lifts must be carefully engineered, keeping the following points in mind.

- Since the load is not freely suspended, careful engineering studies must be made to ensure that the load carried by each machine is less than its rated capacity.
- Make sure slings are arranged to divide the load as planned.
- Review the lifting plan with operators, signalmen and other crew members before beginning the lift.
- Carefully coordinate crane movements through every stage of the lift.
- Avoid boom side loading (see #16).

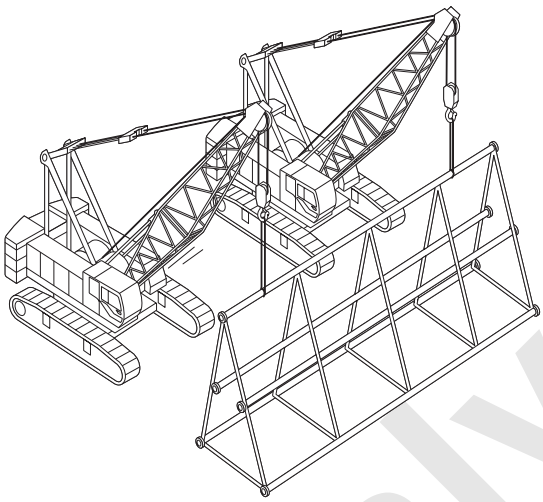

29. Leaving a machine unattended can be very dangerous.
    Before leaving his seat, the operator must take the following steps to prevent his machine from moving :

- Since the load is not freely suspended, careful engineering studies must be made to ensure that the load carried by each machine is less than its rated capacity.
- Lower the load or bucket to the ground.
  Lower the boom when necessary.
- Set the swing brake or lock.
- Set all drum locks.
- Set parking brakes.
- Set travel brakes or locks on crawler machines.
- Disengage the engine clutch or shut off the engine.
- Place the function lock lever in the shut down position.

Reference Only

30. The operator or person in charge should see that :

- Loads are well secured before being lifted.
- Slings are not kinked or damaged.
  The load is well balanced, and the hook block is adequate for the load to be lifted.
  Slings are properly arranged on the hook.
- Sudden stops and starts are avoided.
- The hoist line is vertical before starting the lift.
- The crane hook is equipped with a properly functioning retainer latch.
- Crane loads, grapples, or buckets do not pass over the heads of workmen nor in any way endanger their safety.
  All loose objects must be removed from the load.
  Non-operating personnel should be warned, or told to leave the immediate area, when making crane lifts.

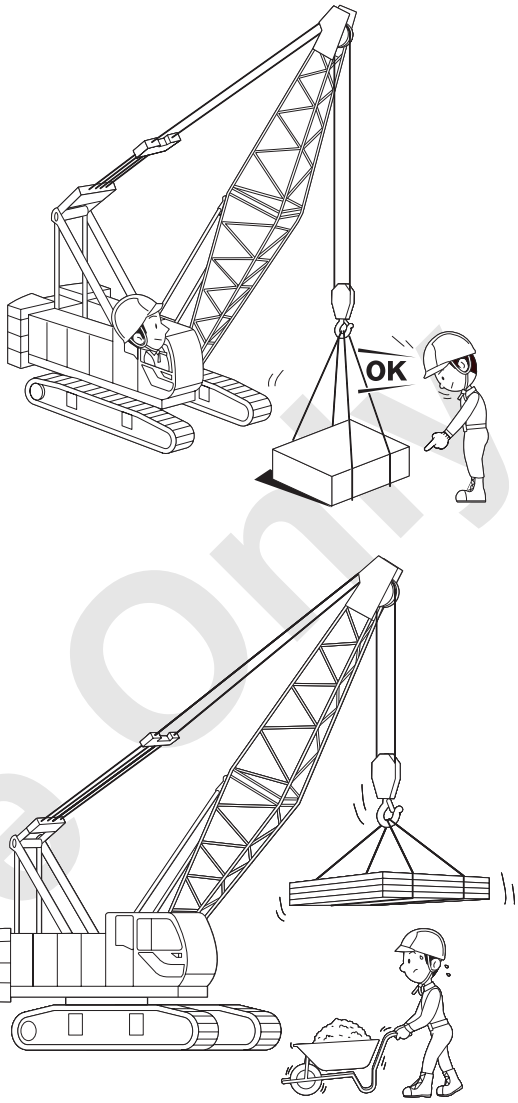

31. Always replace protective guards and panels before operating the machine whenever they become dirty or damaged.

Reference Only

32. Never wear loose clothing rings or other objects which may become entangled in the moving machinery.

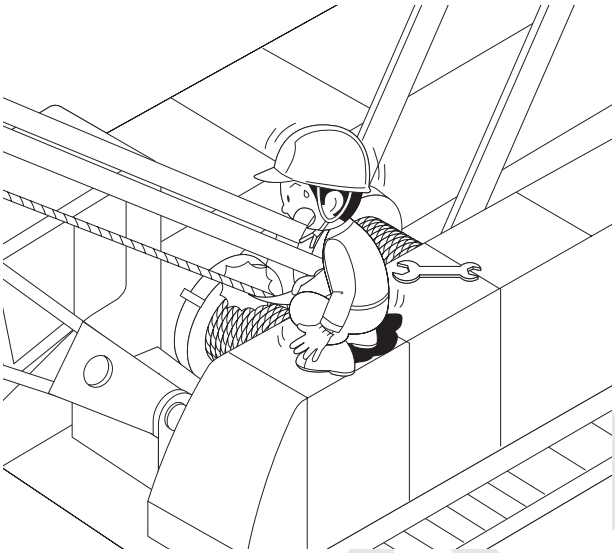

33. The operator should test the winch brakes when a load is first lifted, and when the load is only a few inches above its starting position, to assure the ability of the brakes to hold the load while it is aloft.

34. When refueling, be careful not to smoke.
Stop the engine, and keep metal funnels in contact with the fuel tank filler pipe to prevent static electrical sparks from igniting the fuel.
Turn off cab heater (if equipped) while refueling, and avoid refueling near an open flame.

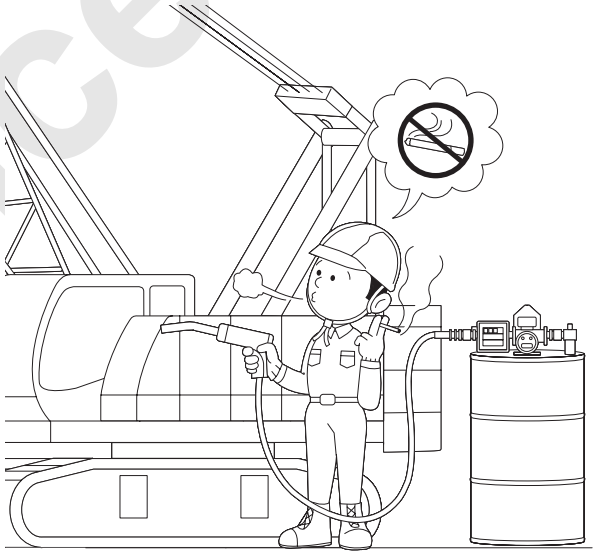

WARNING

- **Use ultra-low sulfur diesel fuel only (S50 : sulfur content lower than 50 ppm).**
  (For the cold region, use suitable low sulfur fuel in the area.)
  Confirm again if it is the proper type of fuel before refilling.
  Failure to observe this precaution may result of adverse effect to the environmental and white smoke.
- **If fuel other than specified one is used, adverse effect may be caused to the engine or exhaust gas recirculate combustion devices and white smoke or failure may be resulted.**
- **If the engine is started with the wrong fuel filled, it is very dangerous because it may cause fire disaster or damage to the engine.**

Reference Only

35. If an overheated condition necessitates an engine shutdown, use extreme care when checking the radiator, if possible, wait for radiator to cool.
    Use a heavy cloth and gloves to protect yourself while slowly loosening the cap.
    Wait until the sound and fluid flow stops.
    Then remove the cap.

36. Be careful where you park your machine.
    Do not leave it where there is a chance of a bank caving in on it, or in a low spot where heavy rains may wash out the footing.

37. When leaving the crane unattended, always remove keys and lock all cab doors to prevent unauthorized person from tampering with the machine and possibly injuring themselves or others.

38. Other operating precautions

- Do not perform lifting work with the crawler retracted.
- Never work in over load condition.
- Avoid free fall work as much as possible.
- Be careful of slipping on slope road.
- Do not use the main and aux. hook simultaneously from the boom point.
- Take slow speed in landing of load on the ground.

MEASURES FOR RADIO TRANSMITTERS

When working in the vicinity of a transmitting antenna for a broadcasting station, the boom could act as a large antenna, and could become electrified.
High voltage of electricity may be generated at the hook end, and the hook could become heated.
If this happens, do not touch the hook.
Electrical shock, or burning could result.
Ground personnel should be warned to stay away from the machine.

Reference Only

MEASURES FOR LIGHTNING

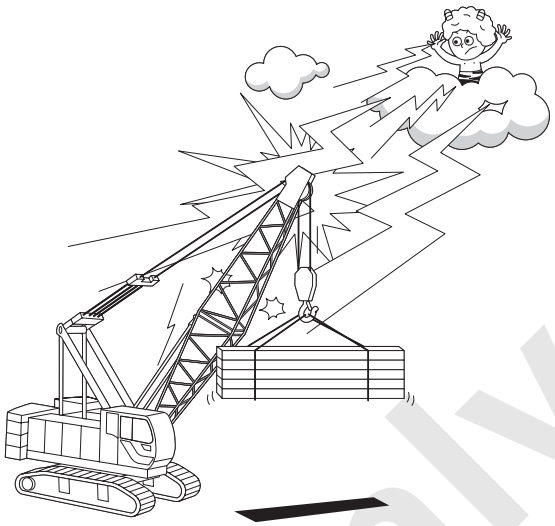

1. When lightning storms are generated and lightning bolts are anticipated, immediately take the following steps :

(1) Stop the work, and lower the load onto the ground.
When the boom (or tower) can be lowered, lower it onto the ground.
(2) Engage the brakes and locks (winch and swing) and stop the engine.
Turn off the power source of the load safety device and main switch.
(3) Advise all personnel to stay away from the surrounding area of the machine.

2. If a lightning strike occurs check the machine before operating it.

(1) Check for burns and damage.
(2) Check the electrical devices and load safety device for performance.
(3) Check each function for abnormality.

MEASURES FOR EARTHQUAKE

1. When earthquakes occur, immediately take the following step :

(1) Stop the work, and lower the load and hook onto the ground.
When the boom (or tower) can be lowered, lower it onto the ground.
(2) Engage the brakes and locks (winch and swing), stop the engine, and turn off the electrical power of the main switch and load safety device.
(3) Advise all personnel to stay away from the surrounding area of the machine.

2. After the earthquake is over, check the machine before operating.

(1) Check each function for performance.
(2) Check the electrical devices and load safety device for performance.

Reference Only

1.4 SAFETY AT INSPECTION AND MAINTENANCE WORK

- Stop the engine during inspection and maintenance work.

- Do not weld other object to the boom since it may cause weakening the boom strength. (Prohibiting modification)

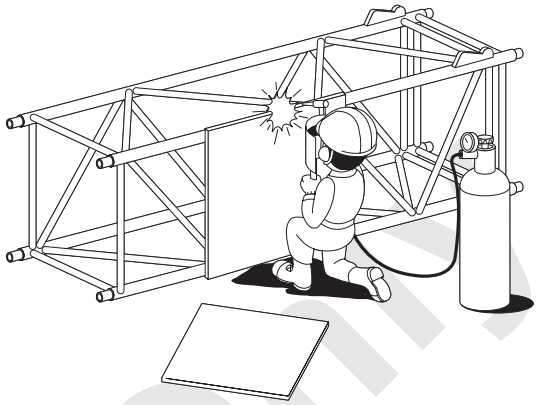

- Do not bring fire close during battery handling.

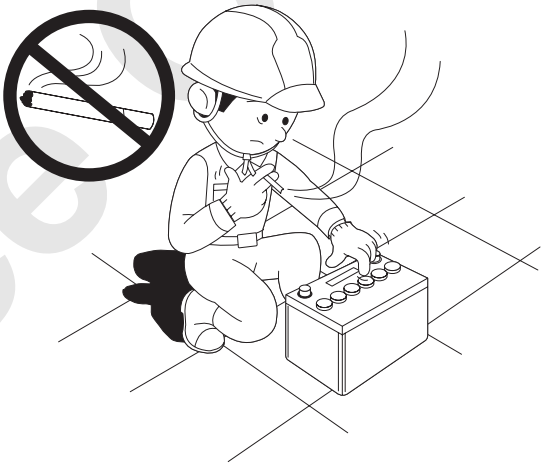

- Disconnect the battery cables during inspection and maintenance of electrical system.

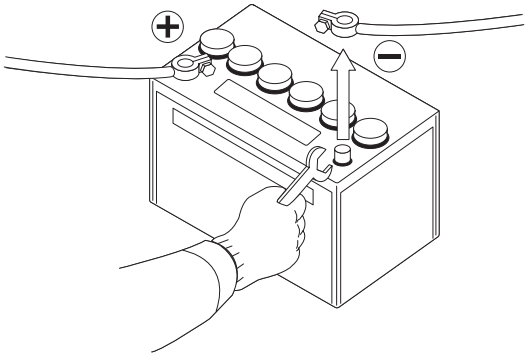

Reference Only

- When removing the radiator cap straight after engine stop, take extra care about internal high pressure and high temperature.
  Slowly remove the radiator cap after the coolant temperature becomes lowered to release pressure.

- Machine parts are hot straight after engine stop. Do not touch them.

- Perform the inspection and maintenance work specified by law.

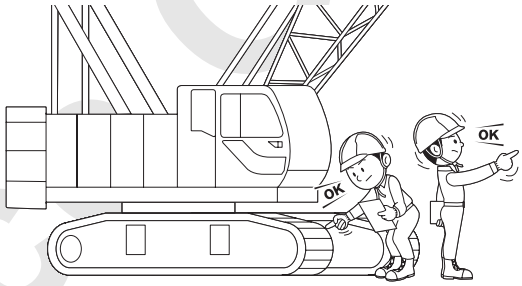

- Keep machine always in order, tidy and clean.

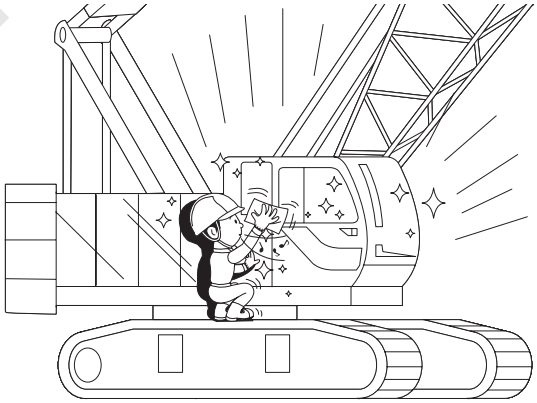

- Whenever any fault is found, repair immediately.

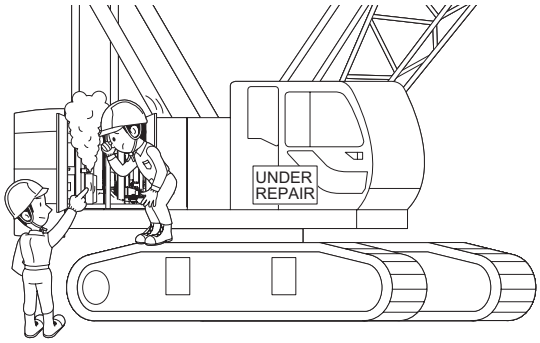

Reference Only

- Ensure to use genuine wire rope, guy line or oil.

CAUTION

The warranty does not cover malfunctions caused by the use of parts other than Manitowoc specified. (Genuine oil, grease and filter).

- Do not use fuel other than specified one.

WARNING

- **Use ultra-low sulfur diesel fuel only (S50 : sulfur content lower than 50 ppm).**
  (For the cold region, use suitable low sulfur fuel in the area.)
  Confirm again if it is the proper type of fuel before refilling.
  Failure to observe this precaution may result of adverse effect to the environmental and white smoke.
- **If fuel other than specified one is used, adverse effect may be caused to the engine or exhaust gas recirculate combustion devices and white smoke or failure may be resulted.**

- Use recommended engine oil.

CAUTION

In order to keep good function of the emission control devices, it is recommended to use the specified brand (recommended) engine oil.

Reference Only

1.5 SAFETY DURING ASSEMBLY AND DISASSEMBLY WORK

- Ensure to wear safety belt and other protective gear during high place work.

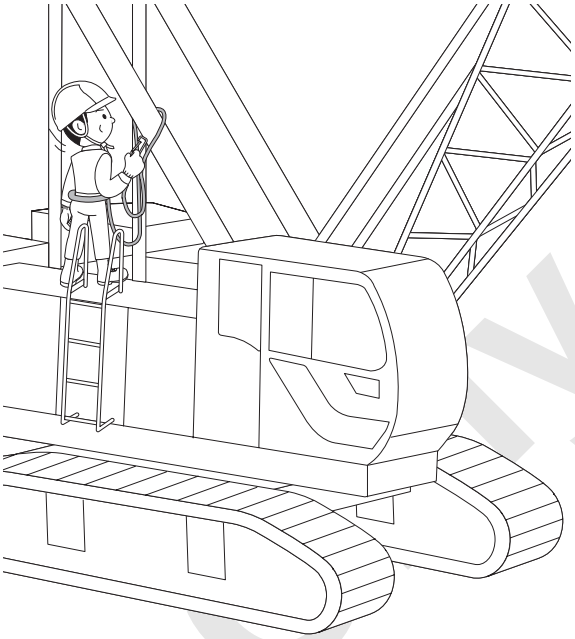

- Ensure to secure the machine to the trailer firmly during transportation.
  Strictly observe the road traffic regulation on dimension and weight during transportation.

- Do not cause overloading on the trailer.

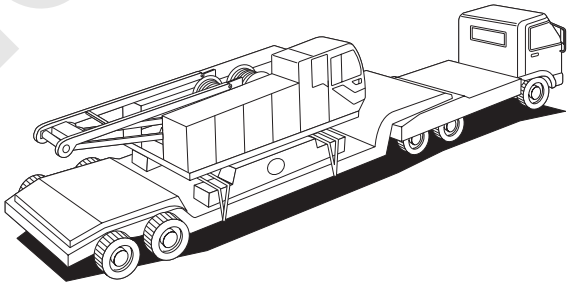

Reference Only

1.6 CAUTIONS IN HANDLING OIL AND PAINT

CAUTIONS IN HANDLING LUBRICATING OIL AND GREASE

1. Oil draining while they are hot may cause burns and is dangerous.
   Drain them after cool down.
2. Getting them into eyes may cause inflammation.
   Wear safety glasses etc in handling to prevent getting into eyes.
3. Getting them touched on skin may cause inflammation.
   Wear protective gloves etc in handling to prevent them touching on skin.
4. Do not drink.
   (Drinking them may cause diarrhea or vomiting.)
   Keep them away from children to reach.

CAUTIONS IN HANDLING PAINT

1. Do not handle in the place with fire.
2. Handling place should be equipped with the localized exhaust system.
3. During painting and drying, exhaust system should work to prevent sucking steam.
4. During handling them, take care not to let them touch on the skin.
   Wear organic gas mask, supplied-air respirator, safety glasses, protective gloves, hood, long sleeve work shirt, scarf etc as required.
5. If spilled, wipe off with cloths after scattering sands.
   Paint adhered cloths, paint dregs or spray dust should be handled by soaking in the water.
6. After handling, wash your face, your hand, rinse your mouth and nasal well.
7. If paint adheres to your skin, wash out with soapy water. If painful or injured, see the doctor.
   If painful or injured, see the doctor.
8. If paint get into your eyes, wash your eyes with much water and see the doctor as soon as possible.
9. If you feel bad by sucking steam or gas, stay calm in clean-air place and see the doctor as required.
10. In case of fire, use CO_2 gas or foam fire extinguisher.
11. Keep them with complete sealing and at the specified place where children can not reach.
12. Dispose them as industrial wastes.
13. Do not use for purpose other than specified (such as glue sniffing).

Reference Only

1.7 SAFETY EQUIPMENT (OPTION)

This machine is equipped with safety equipment as option.
For the detail of the safety equipment (option), refer to the article “8. REFERENCE MATERIALS”.

Reference Only

2. OPERATION

2.1 TERMINOLOGY OF MACHINE EACH PART 2-1
2.2 LOCATIONS AND TERMS OF OPERATING CONTROLS 2-4
2.2.1 HANDING LEVER AND PEDAL 2-5
2.2.2 OPERATING SWITCHES 2-14
2.2.3 VARIOUS SETTING OF MONITOR 2-42
2.2.4 ANEMOMETER INSTALLATION (OPTION) 2-51
2.2.5 AIR CONDITIONER 2-52
2.2.6 AIR CONDITIONER FOR AUTO-IDLE STOP (AIS AIR CONDITIONER) (OPTION) 2-58
2.2.7 AM/FM RADIO 2-61
2.2.8 1WAY CALL (TRANSMITTER) 2-72
2.2.9 MONITORING CAMERA (OPTION) 2-73
2.3 CRANE OPERATION 2-76
2.3.1 ADJUSTING THE OPERATOR'S SEAT 2-76
2.3.2 GETTING ON AND OFF FROM / TO OPERATOR'S CAB 2-78
2.3.3 STARTING AND STOPPING THE ENGINE 2-79
2.3.4 EMISSION CONTROL DEVICE 2-84
2.3.5 TIER4 FINAL INDUCEMENT CONTROL 2-100
2.3.6 AUTO IDLE STOP FUNCTION 2-111
2.3.7 FUNCTION LOCK LEVER 2-114
2.3.8 TRAVELING OPERATION 2-115
2.3.9 SWINGING OPERATION 2-118
2.3.10 BOOM RAISING/LOWERING OPERATION 2-123
2.3.11 HOOK HOISTING/LOWERING OPERATION 2-127
2.4 FREE FALL OPERATION 2-136
2.5 CLAMSHELL OPERATION 2-142
2.5.1 PREPARATION WORK 2-144
2.5.2 CLAMSHELL WORK 2-148
2.6 HANDLING OF HYDRAULIC TAGLINE (OPTION) 2-149
2.7 HANDLING OF VIBRO HAMMER 2-152
2.8 OPERATION IN WEATHER CHANGE AND SPECIAL CIRCUMSTANCE 2-155
2.8.1 CAUTION AGAINST WIND 2-155
2.8.2 CAUTION AGAINST ELECTRIC SHOCK 2-167
2.8.3 CAUTION AGAINST RADIO WAVE INTERFERENCE 2-169
2.8.4 CAUTION AGAINST LIGHTNING 2-170
2.8.5 COUNTERMEASURE AGAINST EARTHQUAKE 2-170

Reference Only

Reference Only

2. OPERATION

2.1 TERMINOLOGY OF MACHINE EACH PART

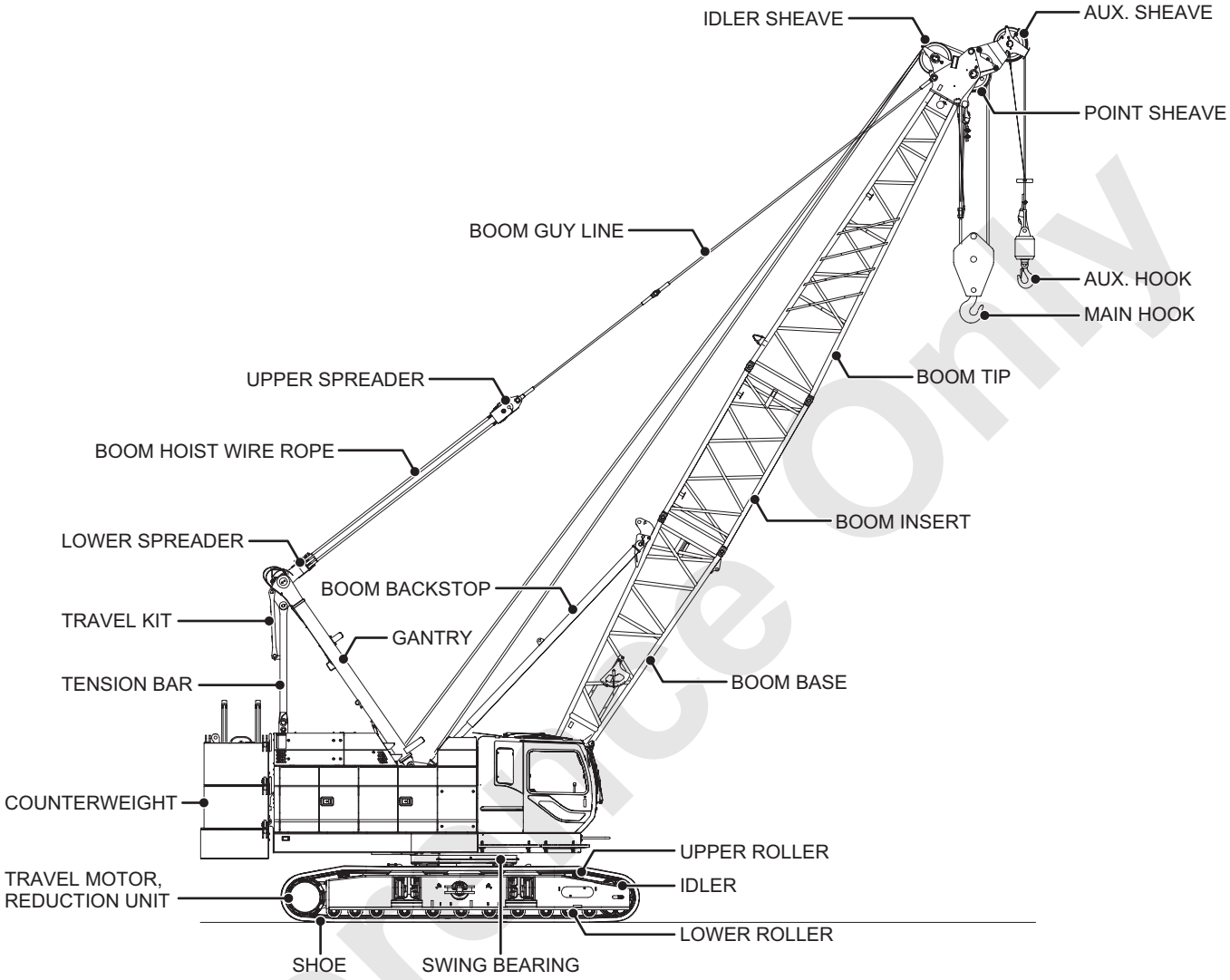

Reference Only

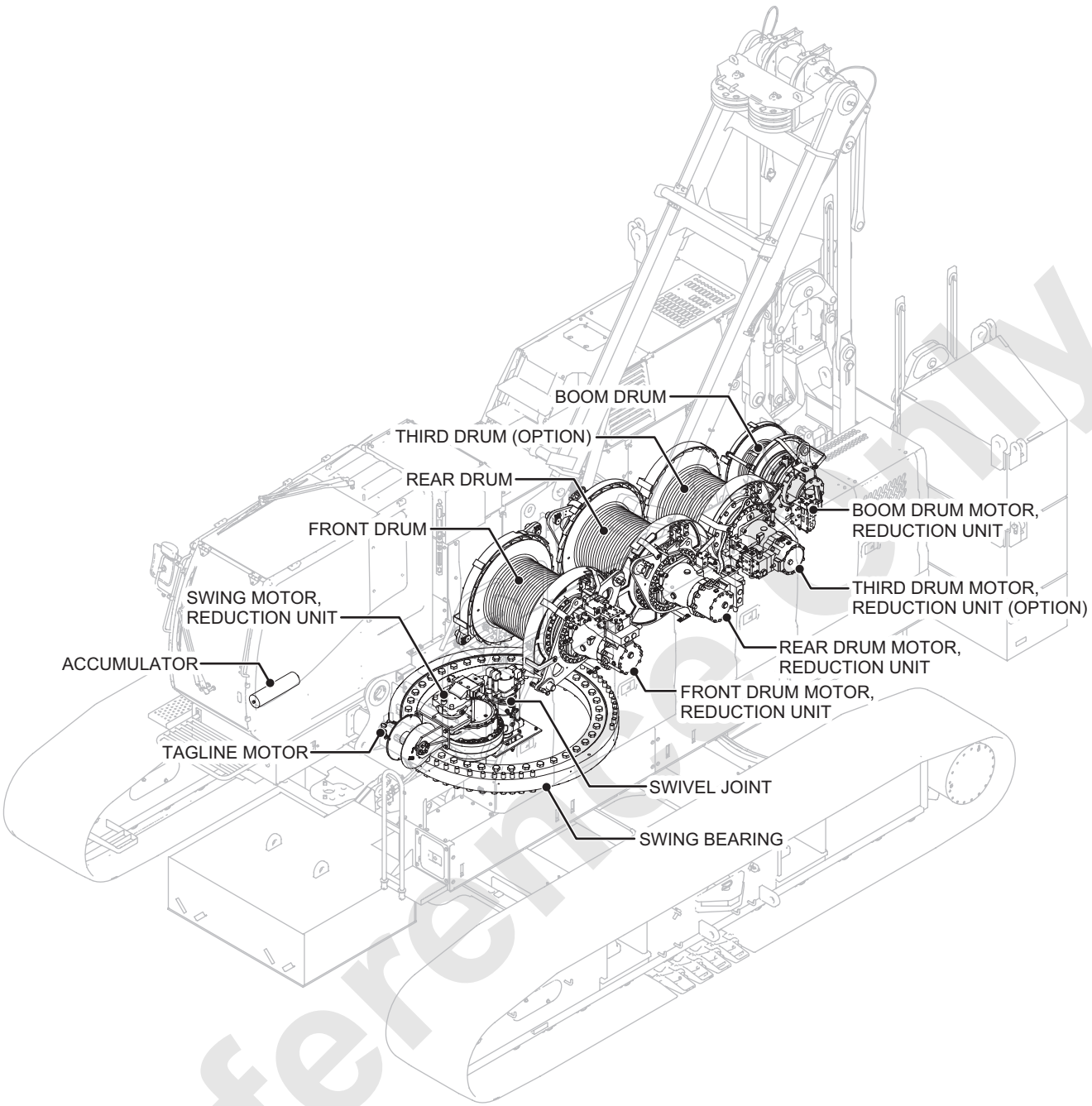

Reference Only

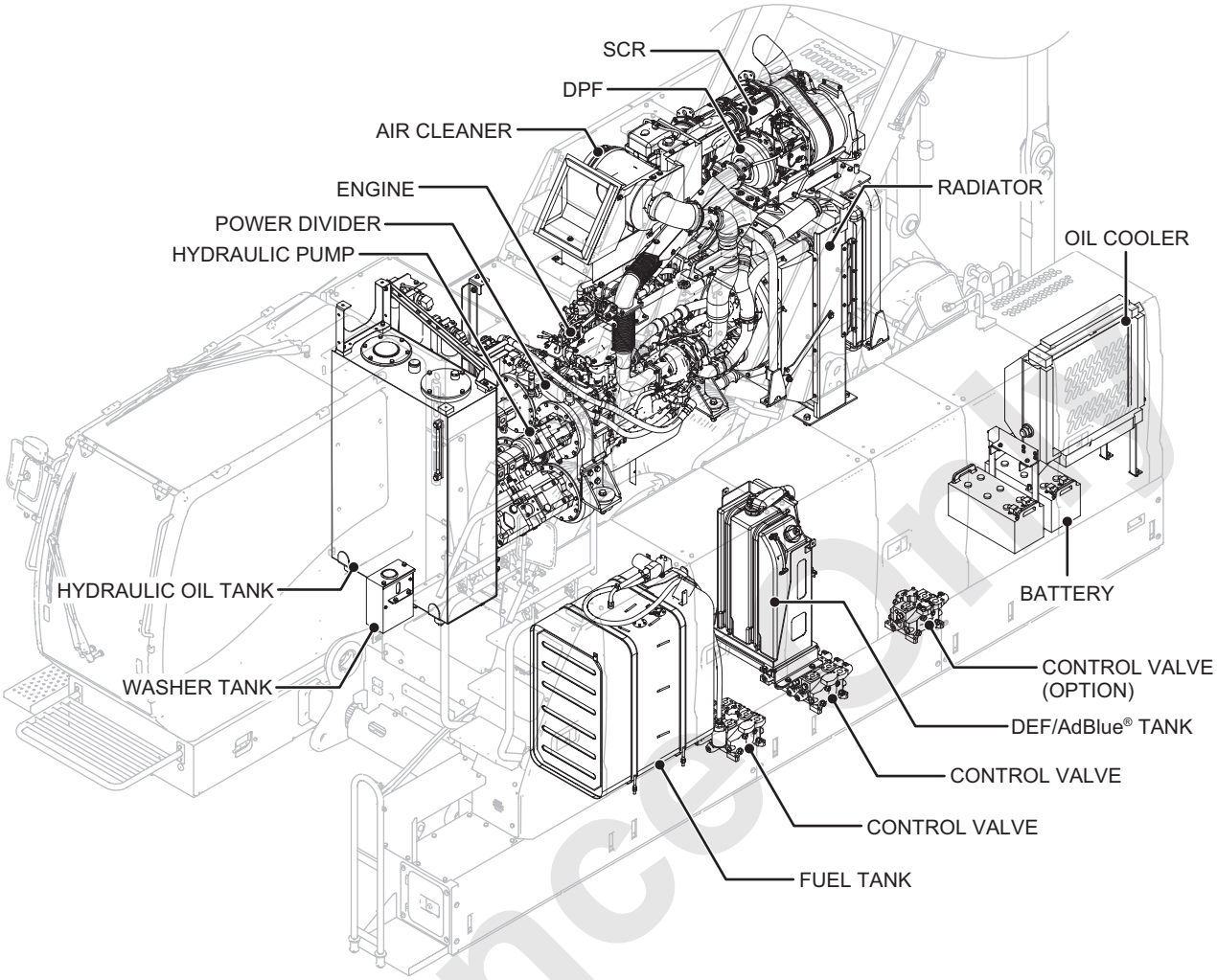

Reference Only

2.2 LOCATIONS AND TERMS OF OPERATING CONTROLS

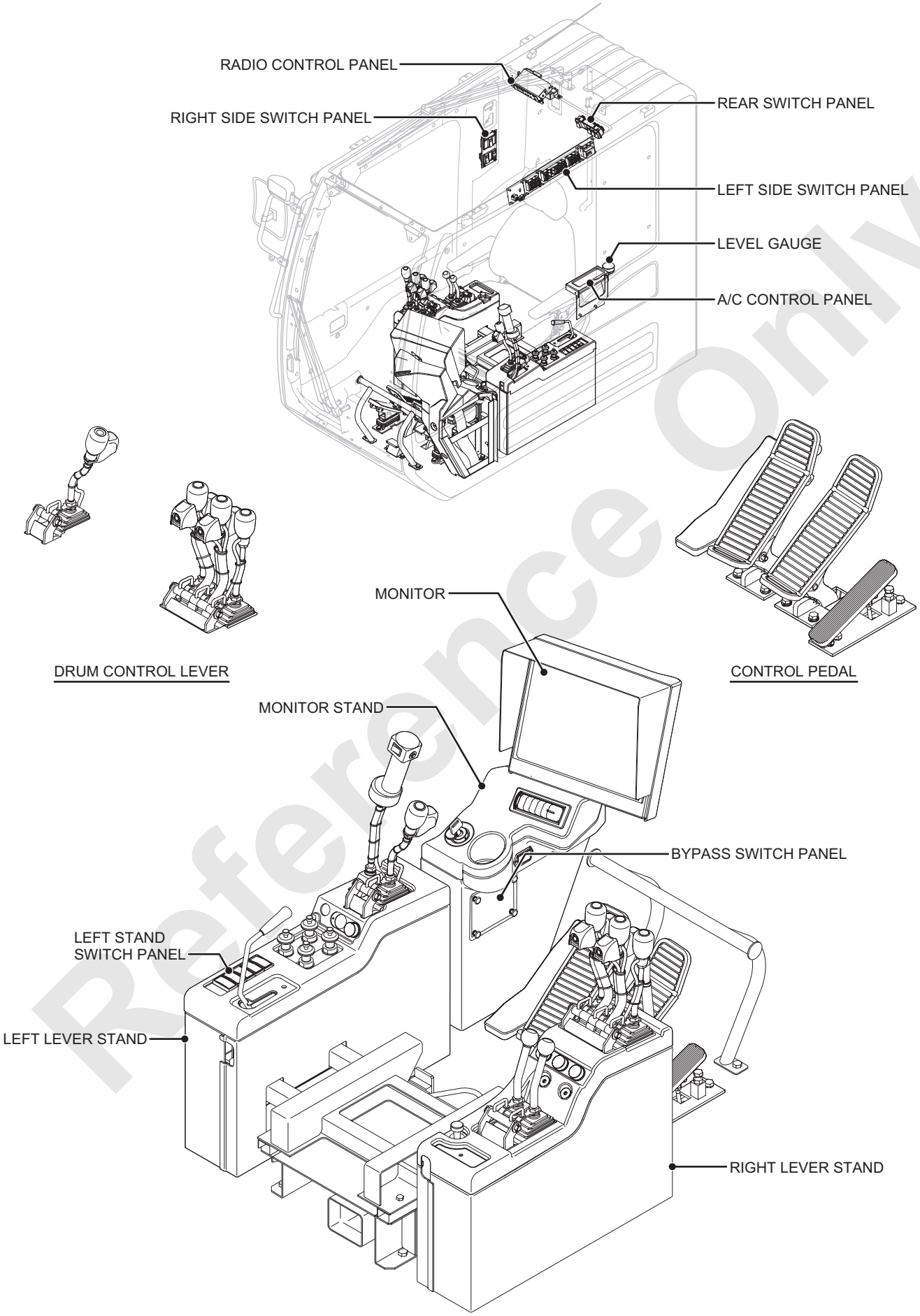

Reference Only

2.2.1 HANDING LEVER AND PEDAL

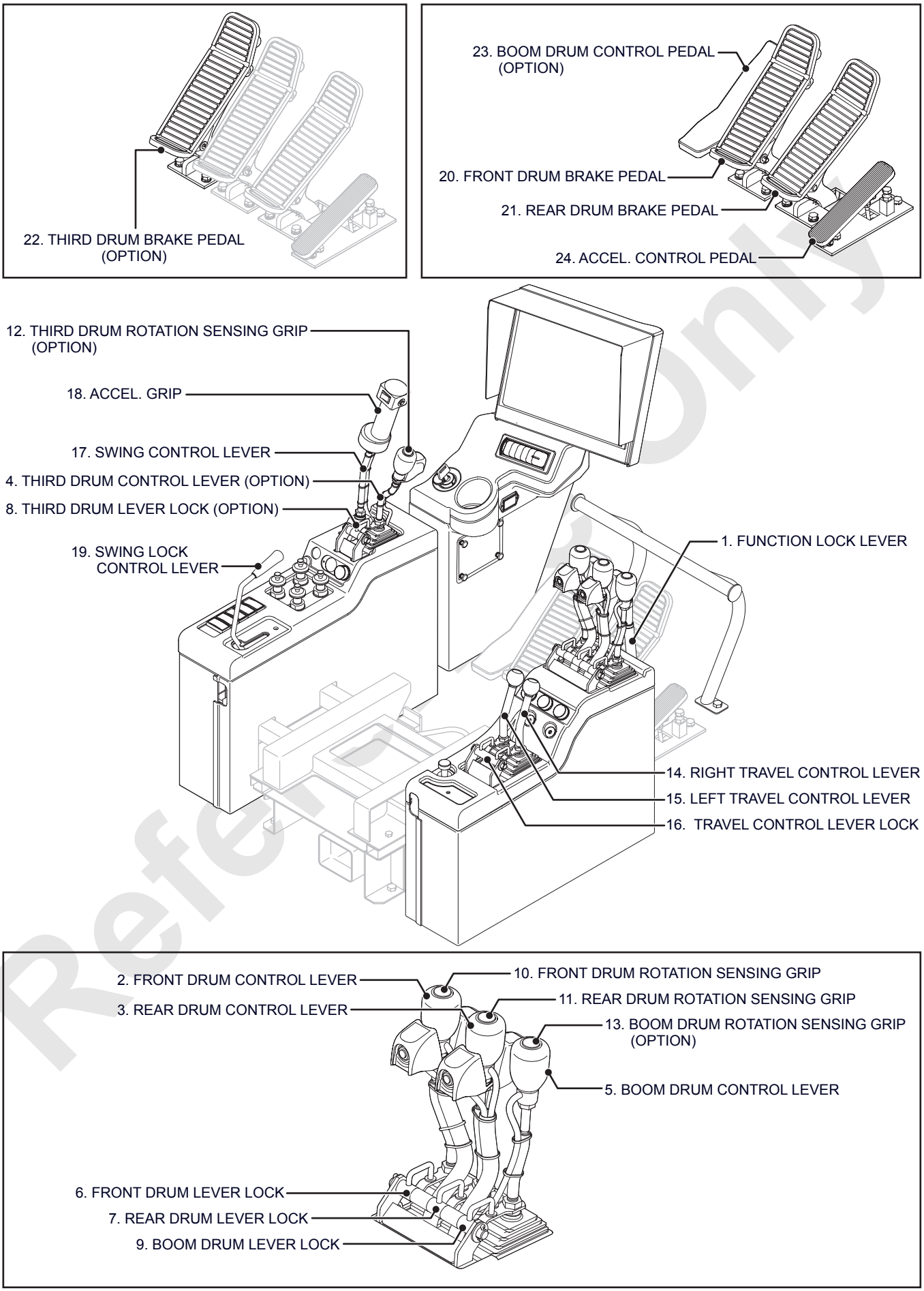

Reference Only

This article explains levers and pedals in the operator's cab.
Refer to the article "2.3 CRANE OPERATION" for the explanation of control based on actual work.

1. FUNCTION LOCK LEVER

The function lock lever is the safety device to make machine not to move even if the persons body touches the control lever when getting ON or OFF the operators seat.
At lock position control of each drum, travel and swing can't be performed.

Pull to near side	Lock position
Push to far side	Work position

Turn the function lock lever to "WORK" position when the machine is to be operated.
Whenever leaving from the operator's seat, ensure to stop the engine and turn the function lock lever to "LOCK" position.
Ensure to turn the function lock lever to "LOCK" position at work completion or at transportation of machine.

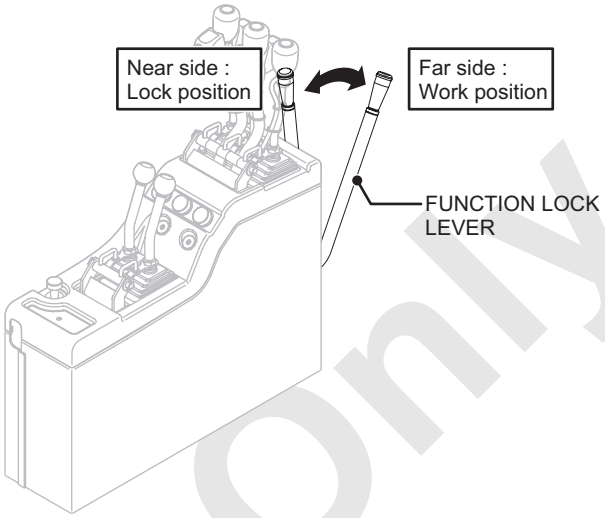

Reference Only

DRUM CONTROL LEVER

2. **FRONT DRUM CONTROL LEVER**
3. **REAR DRUM CONTROL LEVER**
4. **THIRD DRUM CONTROL LEVER (OPTION)**
5. **BOOM DRUM CONTROL LEVER**

These levers are to start, control and stop the front, rear, third (option) and boom drum.

Pull to near side	Winding
Push to far side	Unwinding

Each lever drives and controls the drum such as pulling backward to wind, neutral and pushing forward to unwind.
Each lever is held at the position due to detent provided.

* Detent : Function to prevent lever returning.

6. **FRONT DRUM LEVER LOCK**
7. **REAR DRUM LEVER LOCK**
8. **THIRD DRUM LEVER LOCK (OPTION)**
9. **BOOM DRUM LEVER LOCK**

To lock the respective drum levers are provided apart from the function lock lever.
Engage each lever lock with the levers when they are not in use at neutral position to prevent unexpected movement of lever by touching the operator's body.

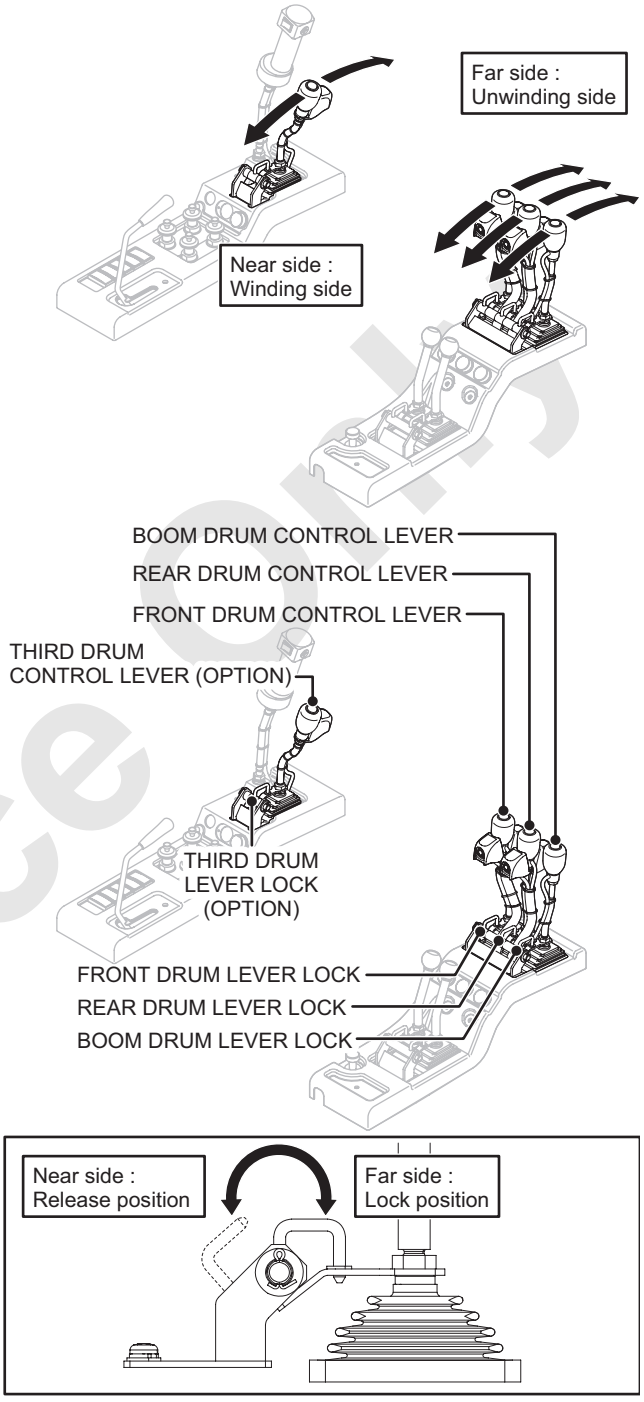

Reference Only

10. FRONT DRUM ROTATION SENSING GRIP
11. REAR DRUM ROTATION SENSING GRIP
12. THIRD DRUM ROTATION SENSING GRIP (OPTION)
13. BOOM DRUM ROTATION SENSING GRIP (OPTION)

To sense the starting and the condition of each drum rotation are provided.
When the "44. DRUM ROTATION SENSING SWITCH (OPTION)" is turned to "ON" position, operator can sense the each drum rotation by movable parts on the top face of each drum control lever grip.

* High speed rotation or free fall of the drum may not be sensed.

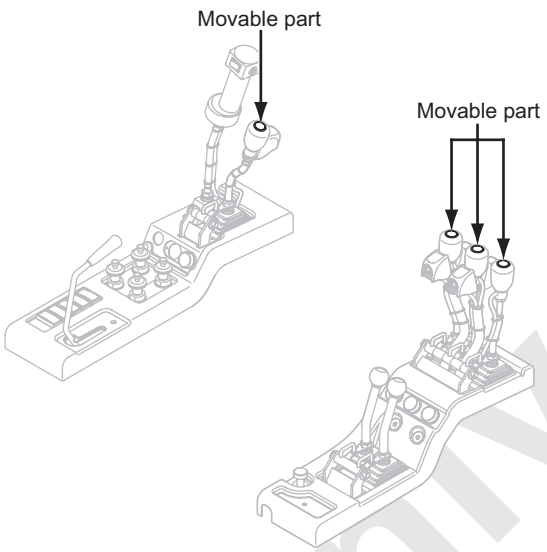

Reference Only

TRAVEL CONTROL LEVER

14. RIGHT TRAVEL CONTROL LEVER
15. LEFT TRAVEL CONTROL LEVER

These levers are to control the traveling (drive, control and stop).
The pivot turn, spin turn and large radius turn can be done for direction change.

Pull to near side	Backward travel side
Push to far side	Forward travel side

Each lever is held at the position due to the detent provided.

* Special attention is required since the lever moving direction has to be reversed based on the direction of lower machinery against the upper.

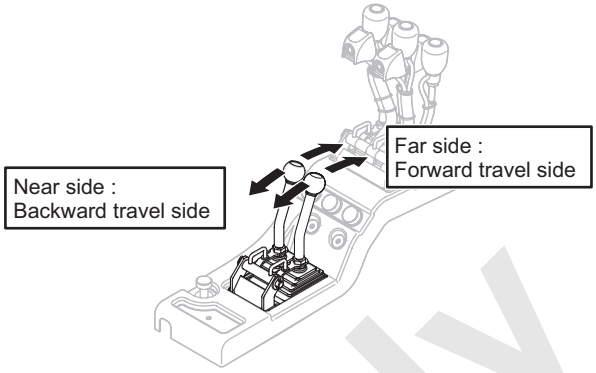

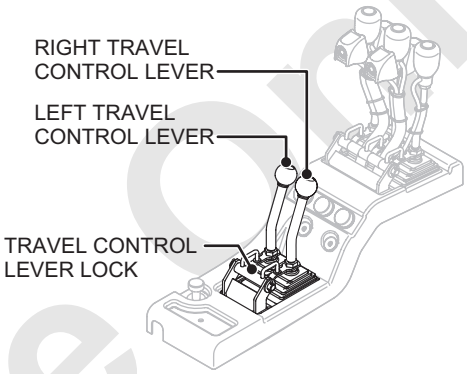

16. TRAVEL CONTROL LEVER LOCK

To lock travel control levers are provided apart from the function lock lever.
Engage each lever lock with the lever when they are not in use at neutral position to prevent unexpected movement of lever by touching the operator's body.

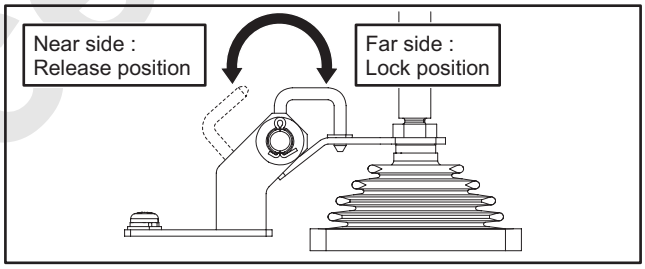

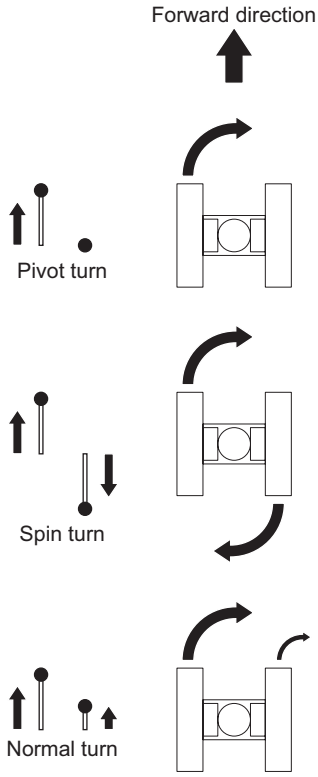

Reference Only

SWING CONTROL LEVER

17. SWING CONTROL LEVER

This lever is to start, control and stop the left and right swing motion of the upper machinery.

Pull to near side	Right swing side
Neutral position (Auto return)	Stop (slowdown stop) position
Push to far side	Left swing side

Lever returns automatically to neutral position when hand is released.

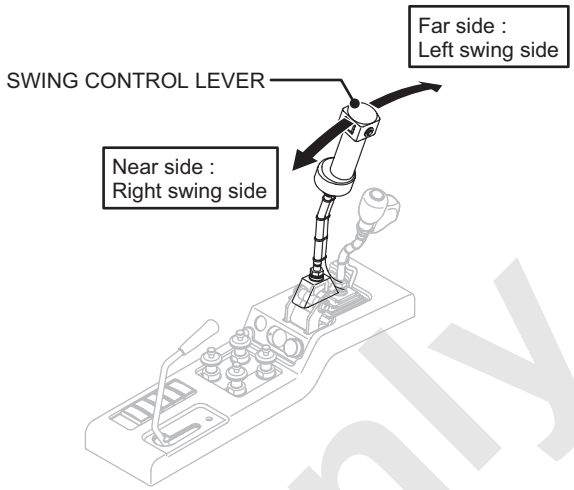

18. ACCEL. GRIP

The engine speed control is done with the accel. grip installed on the swing lever.

Accel. grip has 120 degrees control range and can be set to any position.

Clockwise	Speed decrease side
Counterclockwise	Speed increase side

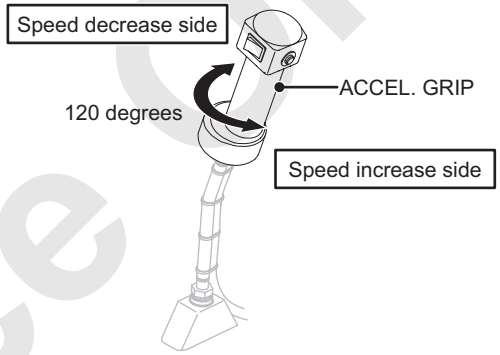

SWING CONTROL LEVER

19. SWING LOCK CONTROL LEVER

This lever is to insert the lock pin from the upper machinery to the pin catch on the lower machinery to secure the upper machinery or release the pin to allow upper machinery swinging.

Ensure to insert the swing lock pin at the work completion or at the transportation.

Pull to near side	Release position
Push to far side	Lock position

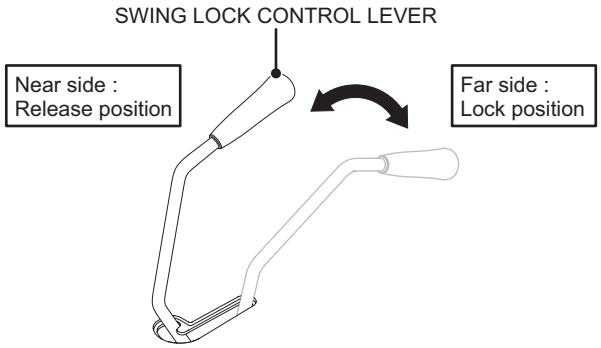

Reference Only

BRAKE PEDAL FOR FREE FALL

20. FRONT DRUM BRAKE PEDAL
21. REAR DRUM BRAKE PEDAL
22. THIRD DRUM BRAKE PEDAL (OPTION)

The pedal applies braking force to the respective drums to control the free falling.

To control the lowering speed of lifting load (bucket or the like) is to be adjusted by the degree of pressing of the pedal.
Pressing the pedal further, engage the pedal lock and can be held the pedal with locked position.

While hoisting and power lowering, the brake will not function even the brake pedal applied and function at free fall only.

* "22. THIRD DRUM BRAKE PEDAL (OPTION)" and "23. BOOM DRUM CONTROL PEDAL (OPTION)" can't be equipped at same time.

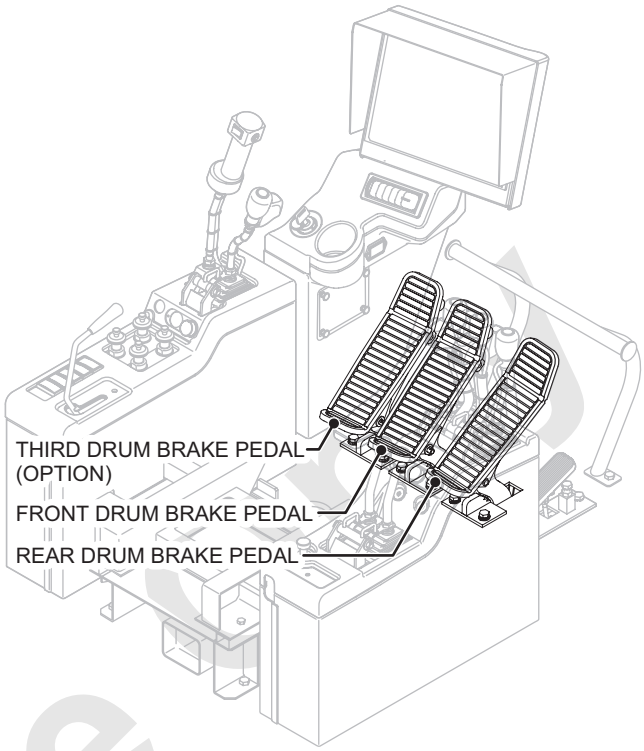

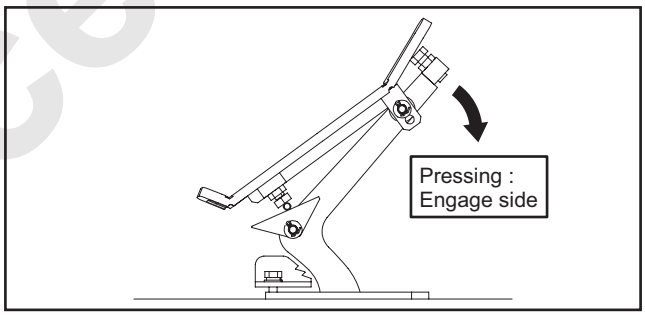

Reference only

CONTROL PEDAL

23. BOOM DRUM CONTROL PEDAL (OPTION)

This pedal can control the boom drum instead of the boom hoist control lever.
The boom raises with the control pedal pushed heel side and the boom lowers with the control pedal pushed toe side.

Press heel side	Raising side
Neutral position (Auto return)	Stop position
Press toe side	Lowering side

Pedal returns automatically to neutral position when foot is released.

* As for the boom drum control lever and boom drum control pedal, whichever is used first overrides the other.

* "22. THIRD DRUM BRAKE PEDAL (OPTION)" and "23. BOOM DRUM CONTROL PEDAL (OPTION)" can't be equipped at same time.

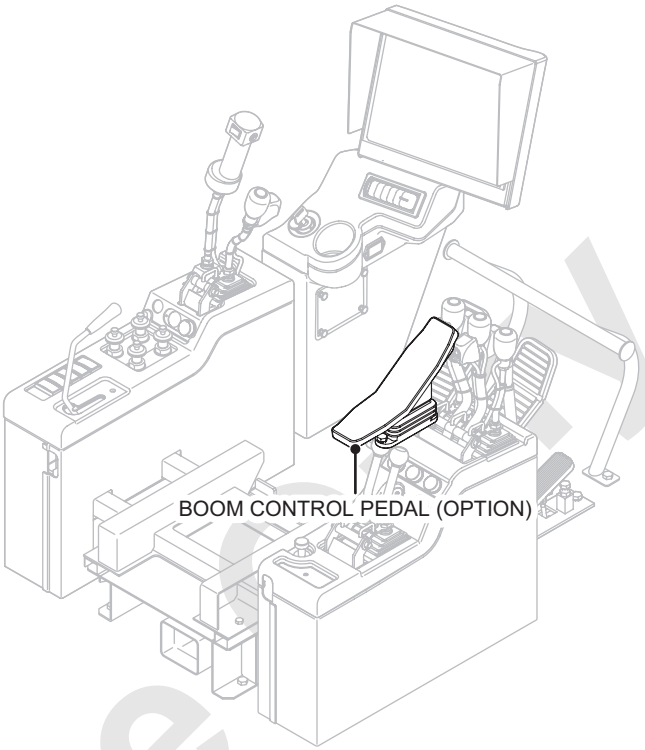

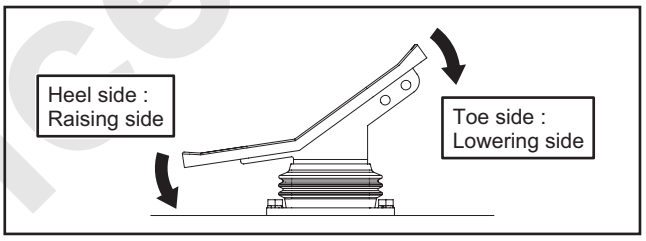

Reference only

24. ACCEL. CONTROL PEDAL

The pedal is for used instead of accel. grip for adjusting the engine speed.

Pressing the control pedal to far side increase the speed and the pedal returns automatically.

Leave the foot, the pedal returns to original position.

* As for the accel. grip lever and accel. control pedal, whichever is used first over-rides the other.

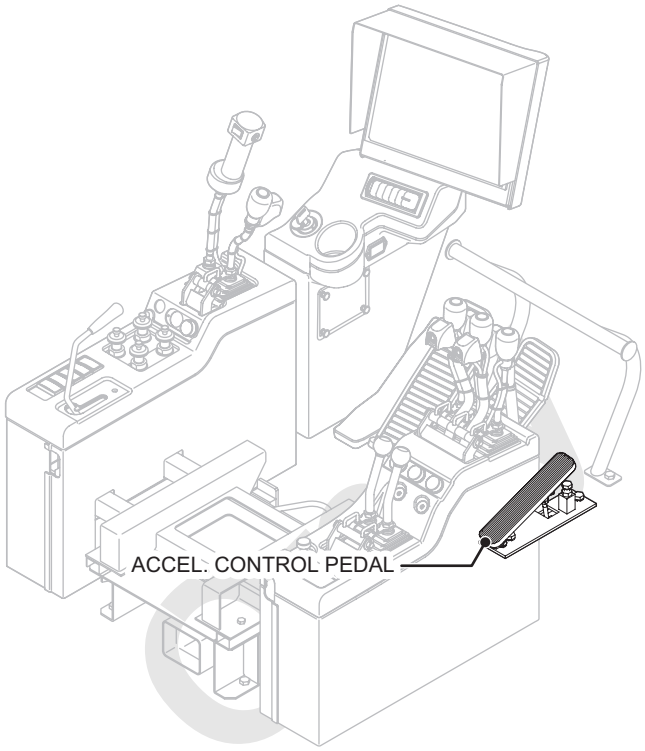

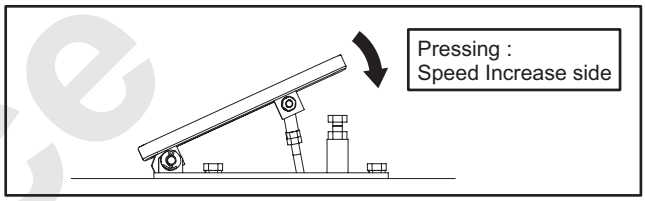

Reference

2.2.2 OPERATING SWITCHES

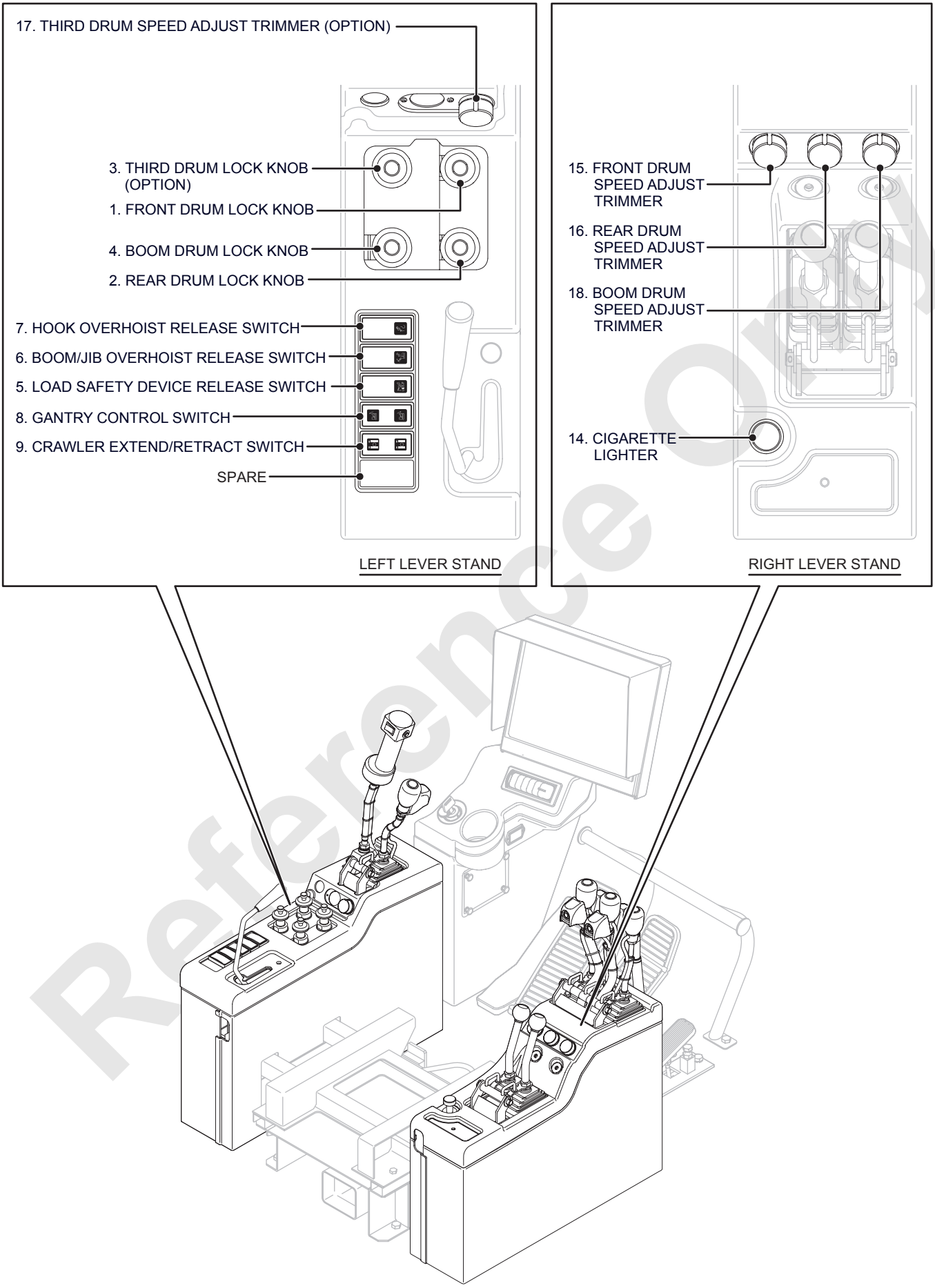

Reference Only

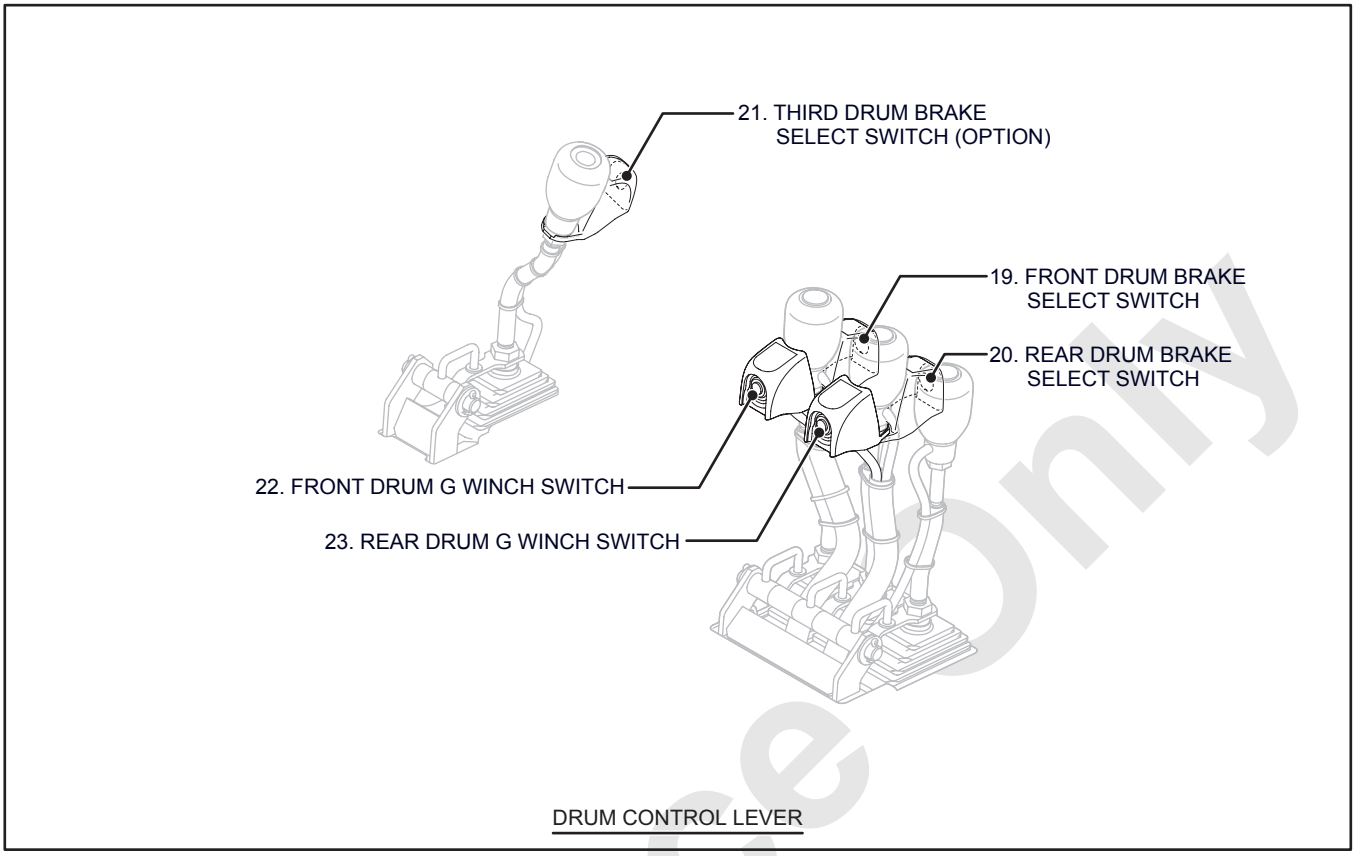

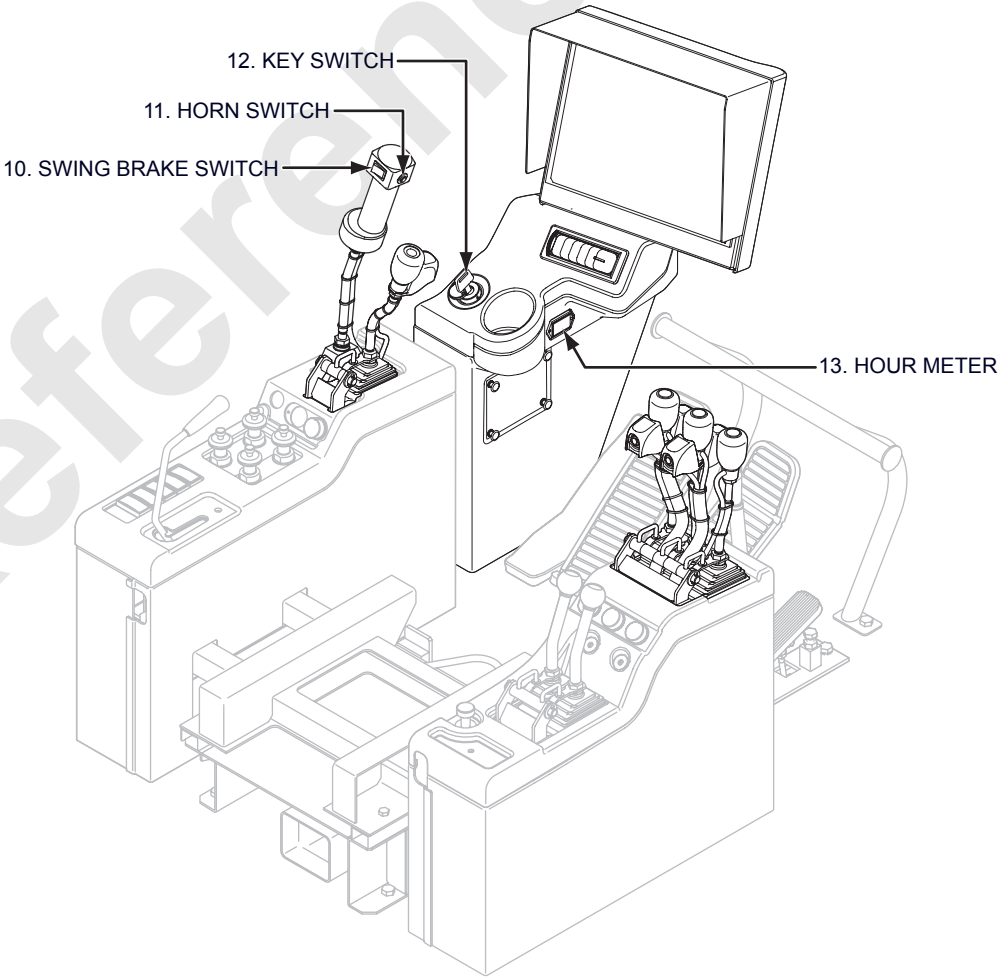

Reference Only

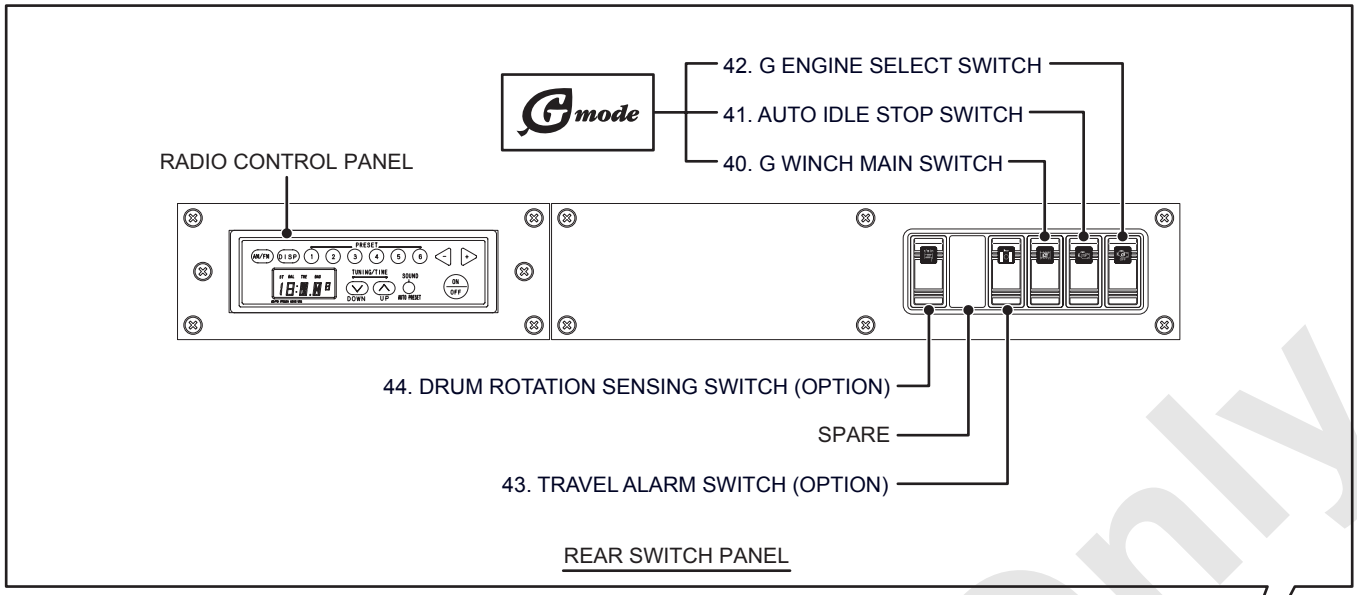

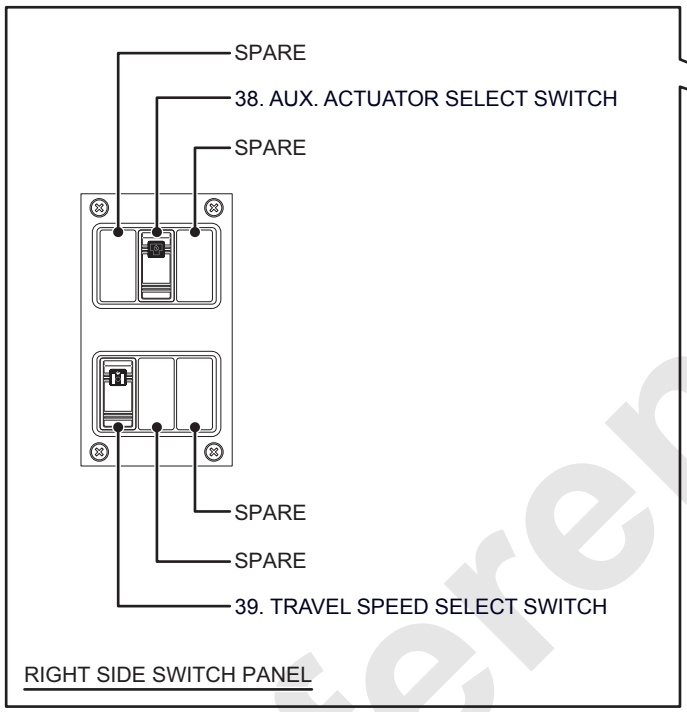

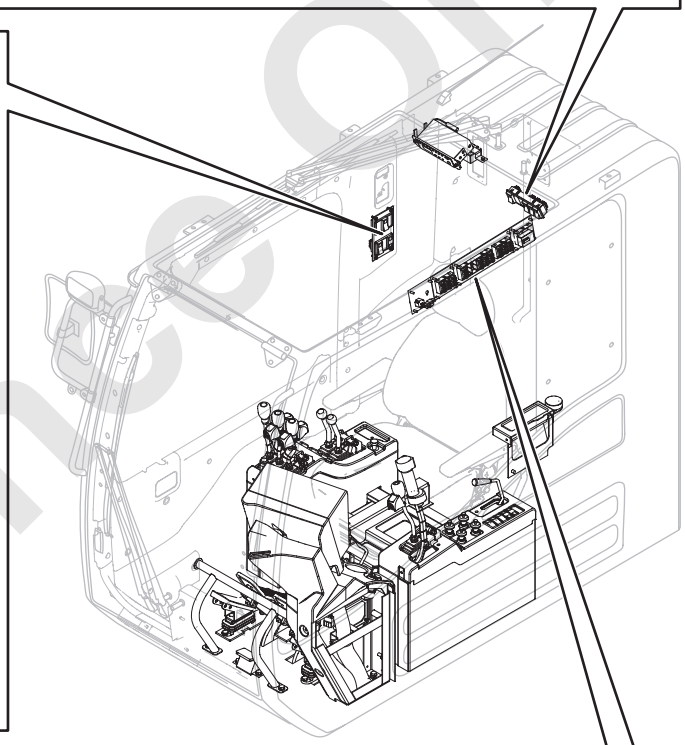

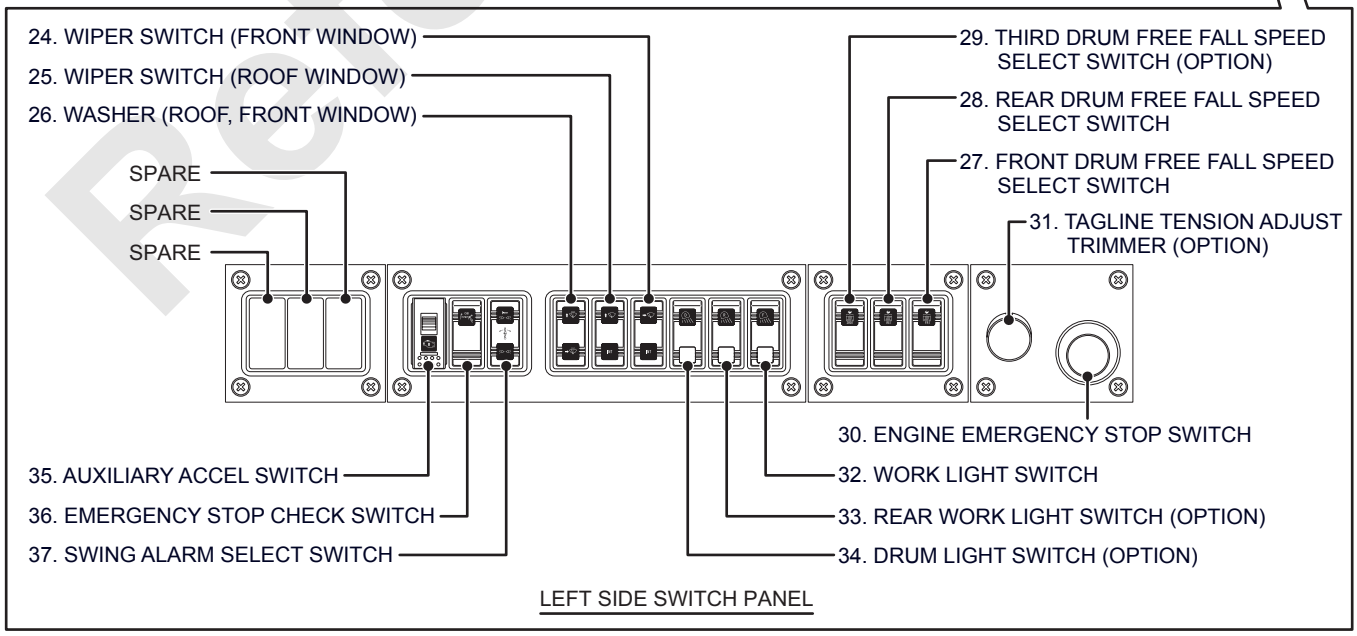

Reference Only

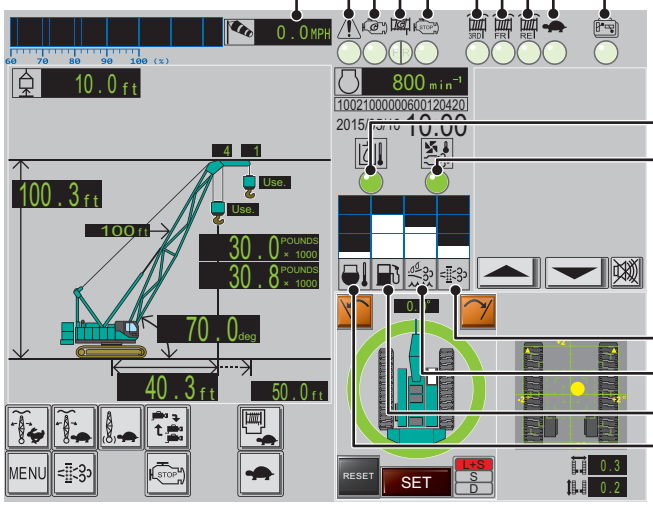

MONITOR SCREEN

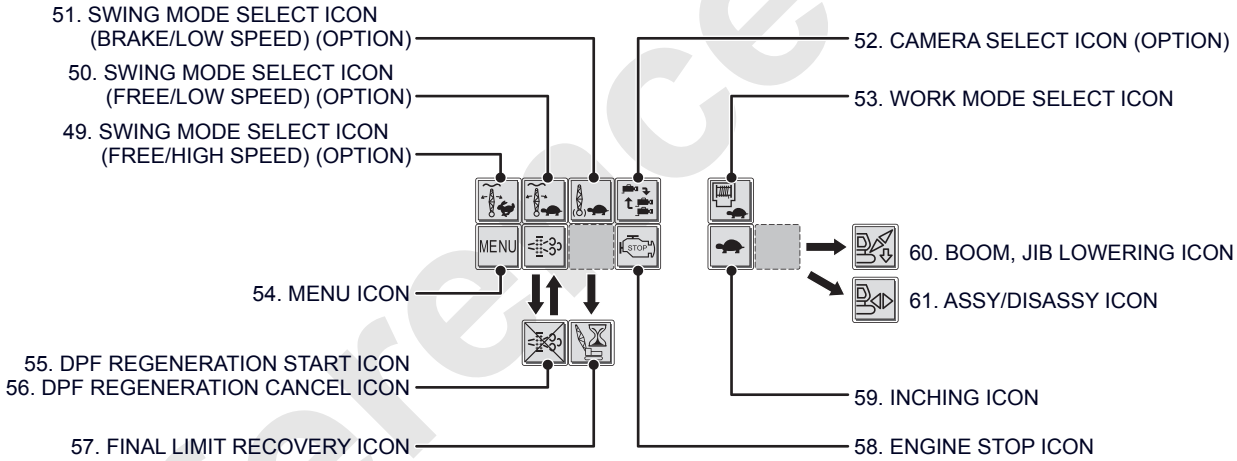

Detail of menu icon

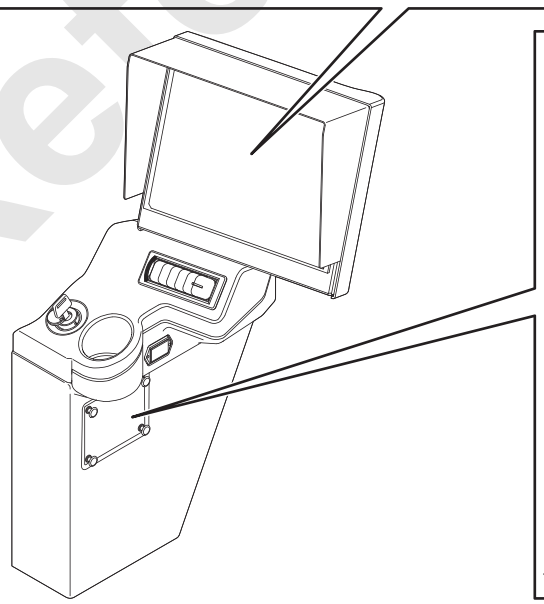

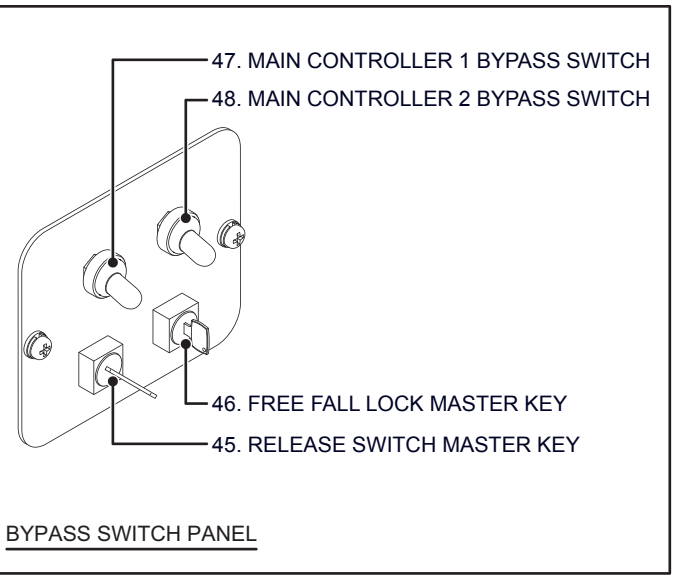

BYPASS SWITCH PANEL

Reference Only

Explain for respective switches in this article.
Refer to the article “2.3 CRANE OPERATION” for the explanation of control based on the actual work.

LEFT LEVER STAND

1. **FRONT DRUM LOCK KNOB**
2. **REAR DRUM LOCK KNOB**
3. **THIRD DRUM LOCK KNOB (OPTION)**
4. **BOOM DRUM LOCK KNOB**

These knobs are to lock the drum for safety purpose.

Engage the drum lock by pulling up the drum lock knob when the drum is not used for long time.
To release, push the knob while pushing the button on the knob top.

Pull up	Lock position
Push down	Release position

Stopping the engine issues alarm sound to expedite drum lock for 4 seconds.

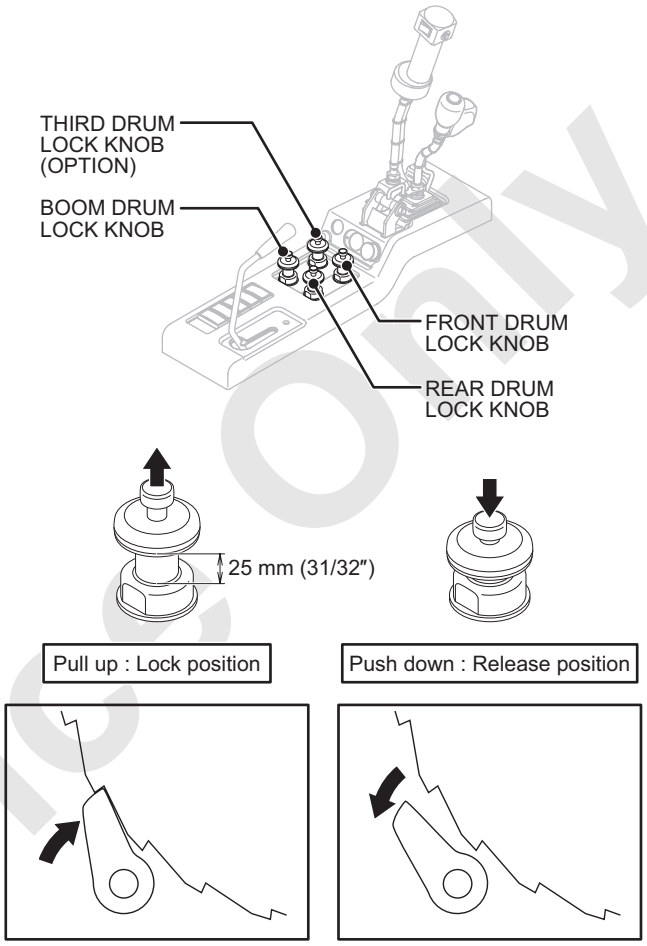

DANGER

Never engage the drum lock while lowering the hook or the attachment.
The drum or drum lock pawl may be damaged.
Failure to observe this precaution may result of damage the machine.

Reference Only

5. LOAD SAFETY DEVICE RELEASE SWITCH

This switch is for release the over load prevention function temporally.
This switch is to be used only in case of the operation has to be made due to the emergency case and/or maintenance work.

This switch is functional only when “45. RELEASE SWITCH MASTER KEY” is turned to release side.

Only while the switch is in release side, the auto stop due to the over load can be released.

Switch returns automatically to original position when hand is released.

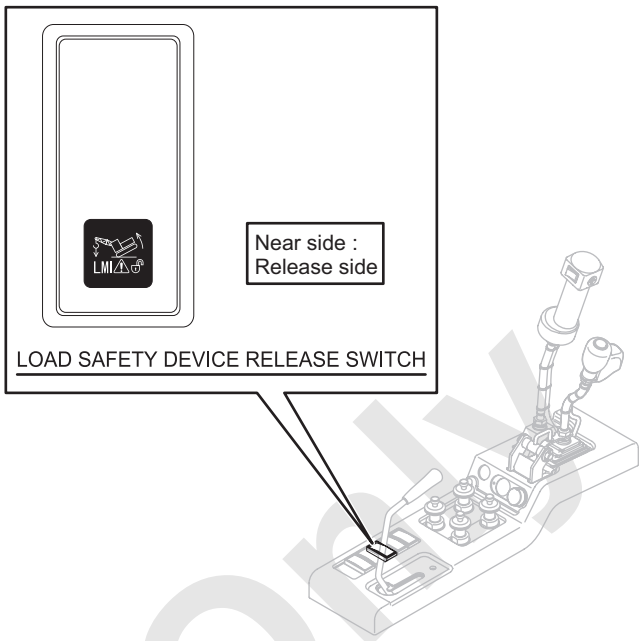

6. BOOM/JIB OVERHOIST RELEASE SWITCH

This switch is for release the boom/jib overhoist prevention function temporally.
This switch is to be used only in case of the operation has to be made due to the emergency case and/or maintenance work.

This switch is functional only when “45. RELEASE SWITCH MASTER KEY” is turned to release side.

Only while the switch is in release side, the auto stop due to boom/jib overhoist can be released.

Switch returns automatically to original position when hand is released.

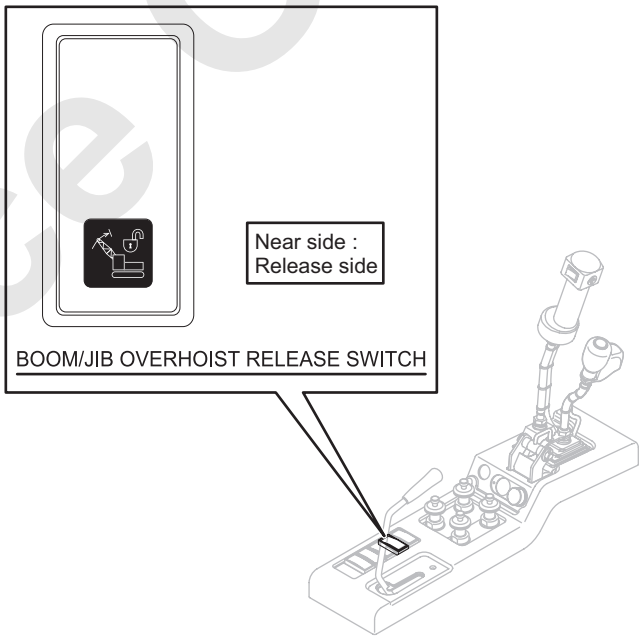

Reference Only

7. HOOK OVERHOIST RELEASE SWITCH

This switch is for release the hook overhoist prevention function temporally.
This switch is to be used only in case of the operation has to be made due to the emergency case and/or maintenance work.

This switch is functional only when “45. RELEASE SWITCH MASTER KEY” is turned to release side.

Only while the switch is in release side, the auto stop due to the hook overhoist can be released.

Switch returns automatically to original position when hand is released.

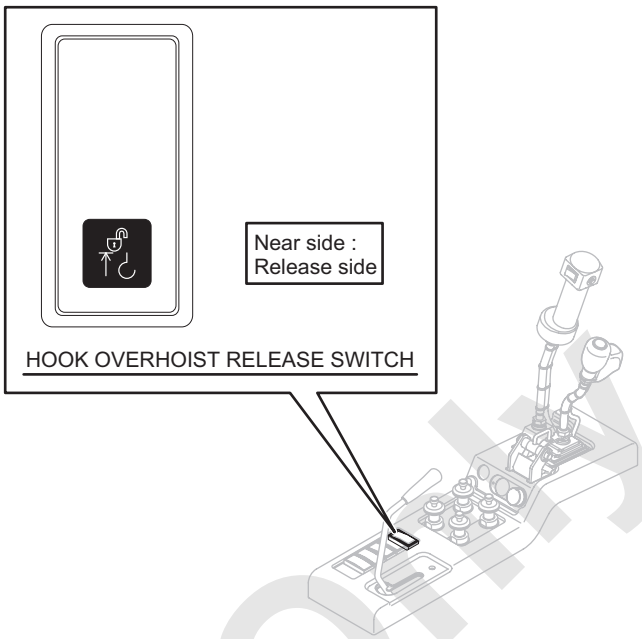

8. GANTRY CONTROL SWITCH

This switch is to control the gantry raising or lowering motion.

Press far side	Raising side
Neutral position (Auto return)	Stop position
Press near side	Lowering side

Switch returns automatically to neutral position when hand is released.

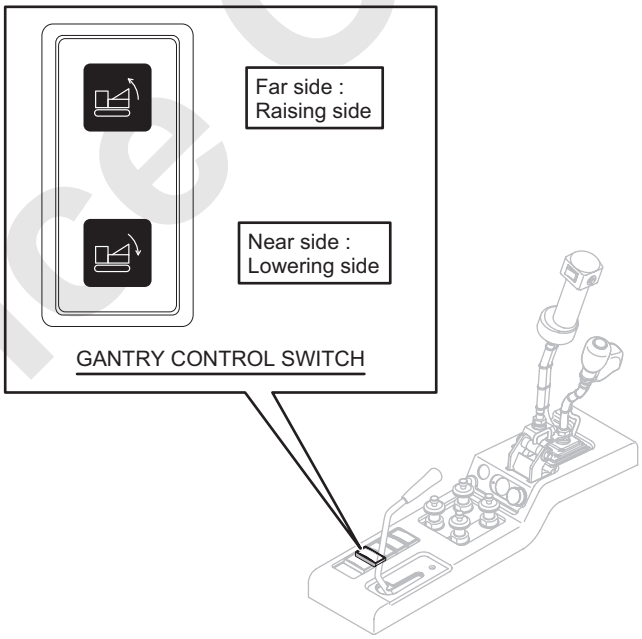

⚠ CAUTION

When the gantry is raised or lowered, make sure that there is no persons around the gantry area and observe the raising or lowering condition of the gantry.
Failure to observe this precaution may result in a serious injury or loss of life.

Reference Only

9. CRAWLER EXTEND/RETRACT SWITCH

This switch is to extend or retract the crawler.

Press far side	Extending side
Neutral position (Auto return)	Stop position
Press near side	Retracting side

Switch returns automatically to neutral position when hand is released.

Crawler extension and retraction must be carried out on the firm and leveled ground without the counterweights, with boom base and the boom angle of approximate 10 degrees.

Even without counterweight and boom base, crawler can be extended or retracted.
But in such case, swing the upper machinery to reduce the load on the shifting side axle.

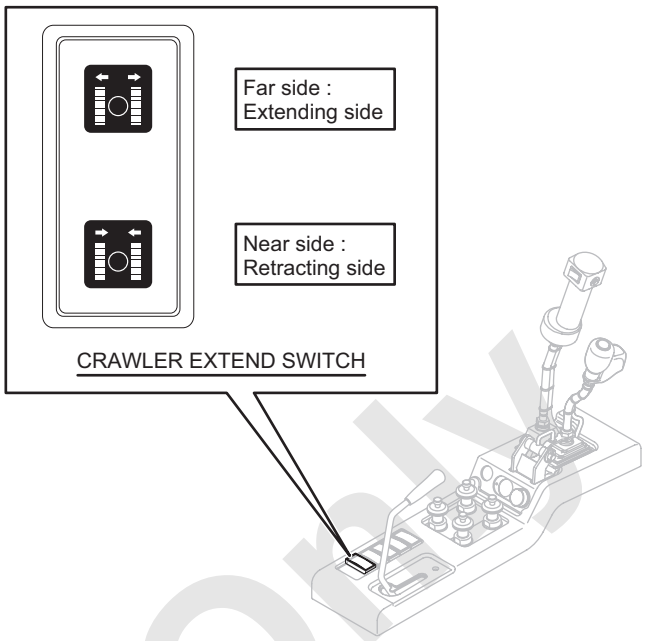

Reference Only

SWING CONTROL LEVER

10. SWING BRAKE SWITCH

This is a brake to hold the upper machinery stationary and not to swing.

Press Left side	Engage side
Press Right side	Disengage side

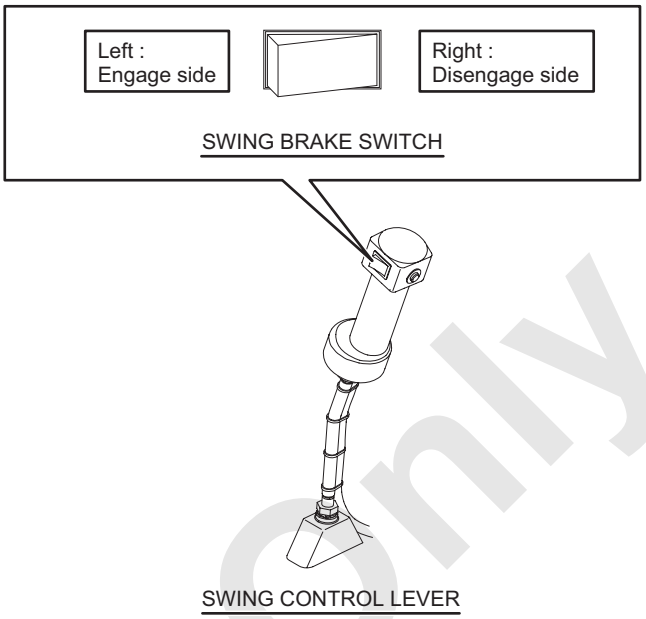

DANGER

Engage the swing brake and swing lock should be performed when the upper machinery is completely stopped.
Use of these to stop the swing motion creates huge burden to the swing mechanism and the attachment and may lead to accident.
Failure to observe this precaution may result in a serious accident and loss of life.

CAUTION

- **Due to the wind or ground inclination the upper machinery may start swing unexpectedly.**
  Take extra care when disengaging the swing brake.
  Failure to observe this precaution may result in a serious accident.
- **If the engine is started with the swing brake disengaged or if the function lock lever is turned to lock position with the swing brake disengaged, the swing brake is kept engaged. In such case, turn the swing brake to "ENGAGE" side once and then turn to "DISENGAGE" side to release the swing brake.**

11. HORN SWITCH

This switch issues horn sound. Push the horn switch at stating the engine, swinging and traveling to alarm personnel around. While the switch is being pushed, the horn sounds.

Switch returns automatically to original position when hand is released.

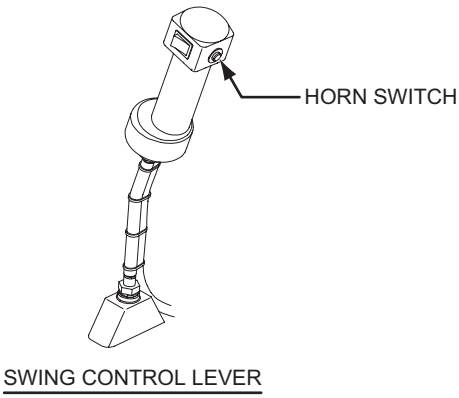

Reference Only

OTHERS

12. KEY SWITCH

This switch is to start, stop the engine and connect its accessory circuit.

OFF	Engine shut off position. (Key insert / take out position.)
ACC	Accessory ON position.
ON	Engine running position.
START	Engine start position.

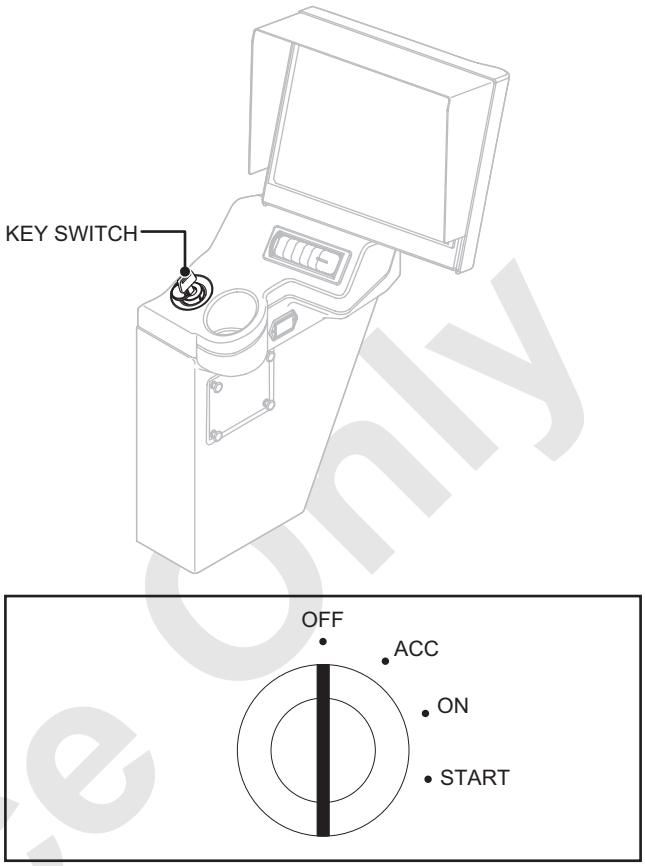

⚠ CAUTION

When starting the engine, make sure that the function lock lever is in lock position and each control lever is in neutral position.

Note

- **There is no glow preheating switch but engine control unit (ECU) automatically preheating the intake air as required.**
- **Indicate an icon (MC1-W01) which is express of under preheating in the monitor in the operators cab.**
- **As to the starting assist of engine at cold atmosphere, refer to the article "2.3.3 STARTING AND STOPPING THE ENGINE".**

13. HOUR METER

Count of the machine operation time.

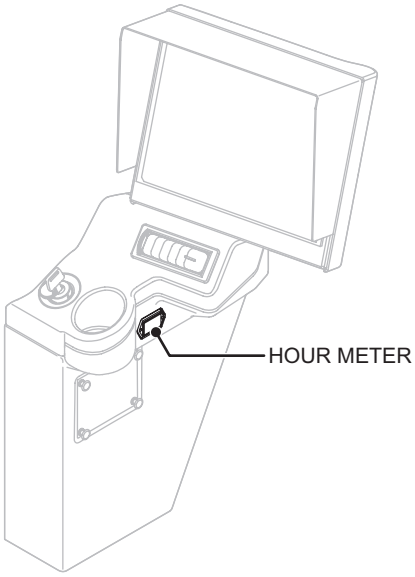

Reference Only

14. CIGARETTE LIGHTER

When pushed in, lighter is held at its position and when heated red, it is popped out.
Pull out for use.

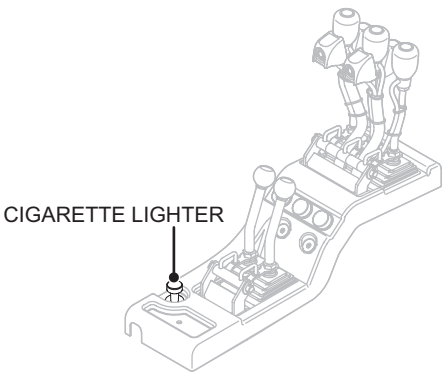

CAUTION

If the lighter knob does not pop up within 30 seconds after it is pushed in, pull it out.
If it is kept pushed position, wiring may be damaged and may cause fire.
Failure to observe this precaution may result in a serious accident.

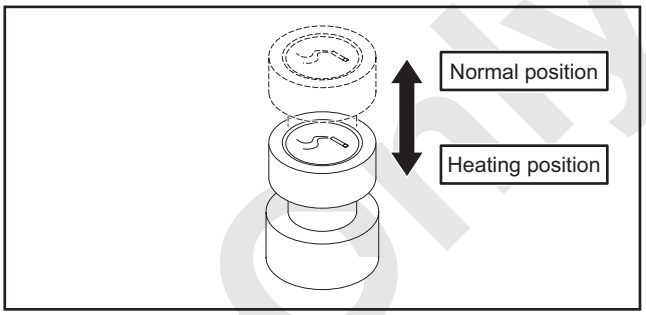

15. FRONT DRUM SPEED ADJUST TRIMMER
16. REAR DRUM SPEED ADJUST TRIMMER
17. THIRD DRUM SPEED ADJUST TRIMMER (OPTION)
18. BOOM DRUM SPEED ADJUST TRIMMER

This trimmer adjusts the drum speed apart from the drum speed control by the control lever.
(This makes synchronous speed adjusting with other drum possible.)

Turn right (Clockwise)	Speed increase side
Turn left (Counterclockwise)	Speed decrease side

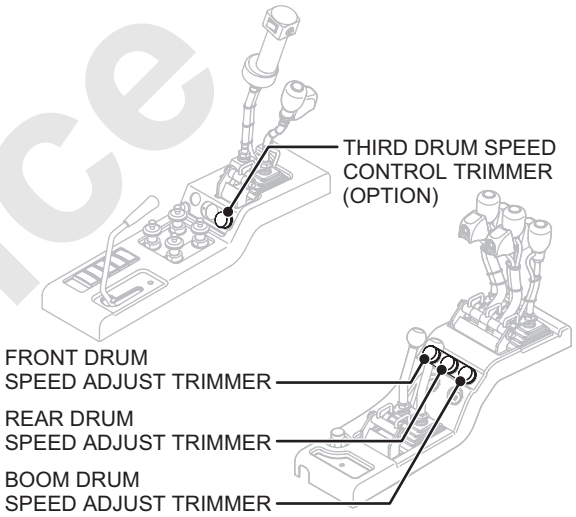

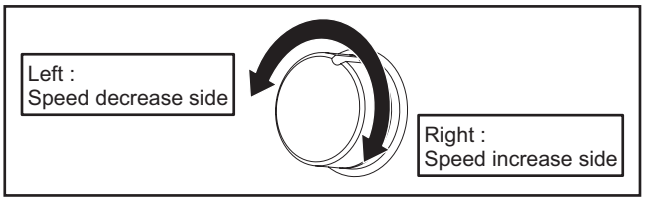

Reference Only

HOIST CONTROL LEVER

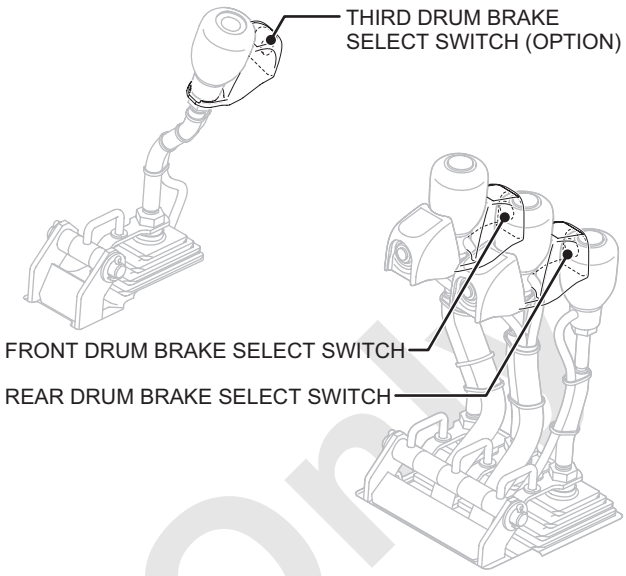

19. FRONT DRUM BRAKE SELECT SWITCH
20. REAR DRUM BRAKE SELECT SWITCH
21. THIRD DRUM BRAKE SELECT SWITCH (OPTION)

These switches are to select the required mode either the free fall or neutral brake.
As for the detail of free fall operation, refer to the article “2.4 FREE FALL OPERATION”.

(1) Free fall mode
Turns the free fall lock switch to release side and push the switch while pressing the brake pedal fully will make free fall mode.
At the same time, free fall indication lamp lights up to advise free fall mode.
(Brake turns into brake pedal control.)

(2) Neutral brake mode
Pushing the switch again while pressing the brake pedal fully turns into the neutral brake mode.
At the same time free fall indicating lamp goes off. (Brake turns into auto brake.)
For safety it certainly turns to neutral brake mode after the engine start.

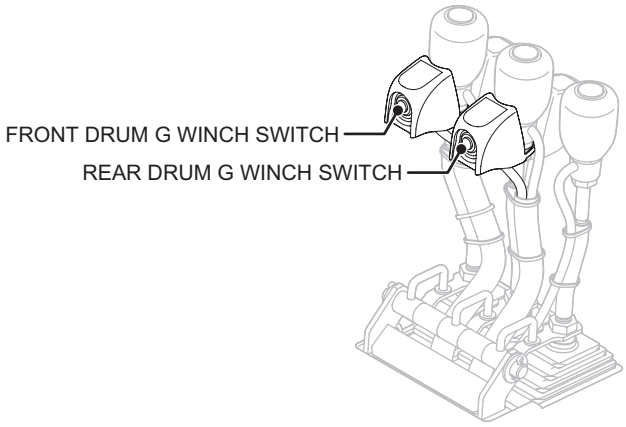

22. FRONT DRUM G WINCH SWITCH
23. REAR DRUM G WINCH SWITCH

This switch is for changing these winches to G winch mode.

With “40. G WINCH MAIN SWITCH” turn ON and push this switch, respective winches change to G winch mode.

As to the details of G winch mode, refer to “2.3.11 HOOK HOISTING/LOWERING OPERATION”

Reference Only

LEFT SIDE SWITCH PANEL

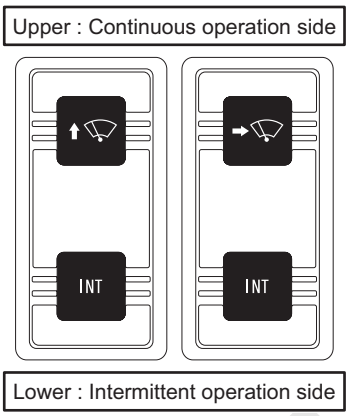

24. WIPER SWITCH (FRONT WINDOW)
25. WIPER SWITCH (ROOF WINDOW)

These switch are to actuate each wiper.

	Continuous operation.
INT	Intermittent operation.

26. WASHER (ROOF, FRONT WINDOW)

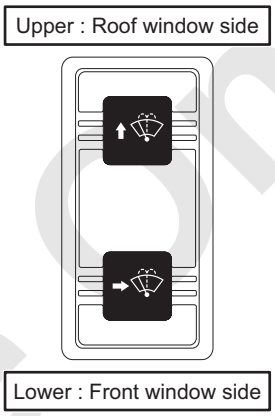

This switch is to discharge washer liquid to roof, front window.

	Washer liquid comes out to roof window.
	Washer liquid comes out to front window.

Note

Check the fluid level periodically and refill if required.
Refer to the article "2.1 TERMINOLOGY OF MACHINE EACH PART" for the location of the washer tank.

Reference Only

27. FRONT DRUM FREE FALL SPEED SELECT SWITCH
28. REAR DRUM FREE FALL SPEED SELECT SWITCH
29. THIRD DRUM FREE FALL SPEED SELECT SWITCH (OPTION)

This switch is for making the free fall effective when the ambient temperature is low.

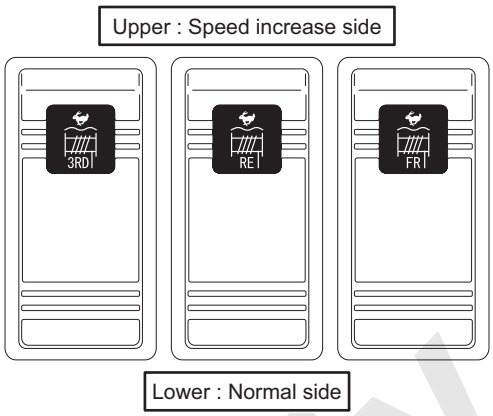

Speed increase side	Free fall speed is increased. This is suitable for light weight free falling work when ambient temperature is low.
Normal side	Use normal free fall work.

CAUTION

- **Do not free fall with heavy load.**
  The control of lifting load becomes difficult by brake pedal if the free falling speed is fast. Perform free falling with lower speed as slow as possible.
- **When changing the free fall speed select switch is in increase side, do not release the brake pedal with the hook on the ground.**
  The drum automatically rotates to lowering side and this may cause rough spooling.

30. ENGINE EMERGENCY STOP SWITCH

Push this switch to stop the engine in emergency.
The switch is held at the pushed position.
Turn the switch to right to return to the original position.

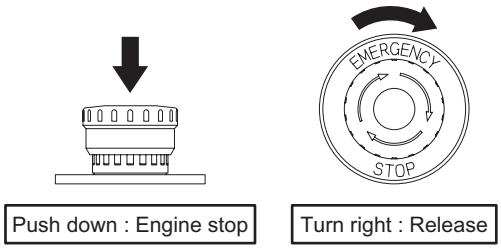

Note

The engine will not start when the switch is being pushed in.

Reference Only

31. TAGLINE TENSION ADJUST TRIMMER (OPTION)

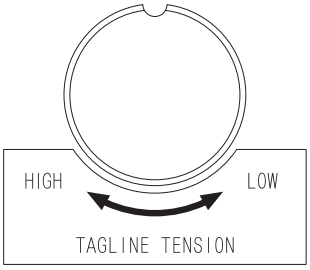

This trimmer is to adjust the tagline rope tension.

Turn right (Clockwise)	Tagline rope tension becomes high.
Turn left (Counterclockwise)	Tagline rope tension becomes low.

When the tagline is not in use, set the trimmer to “LOW” side.

* The drum speed adjustment can not be done with this adjusting trimmer.

32. WORK LIGHT SWITCH
33. REAR WORK LIGHT SWITCH (OPTION)

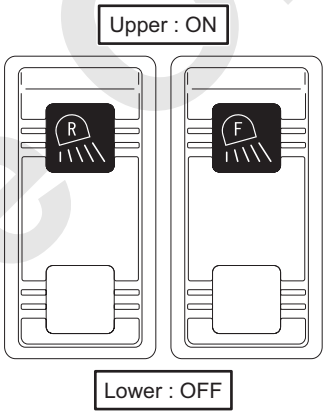

This switch is to select ON/OFF of the front, rear lights.

ON	Light ON
OFF	Light OFF

⚠ CAUTION

Ensure to turn the work light switch “OFF” when the work is completed.
Failure to turn the switch off may cause of battery discharge.

34. DRUM LIGHT SWITCH (OPTION)

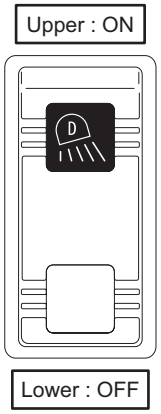

This switch is to select ON/OFF of the drum lights.

ON	Light ON
OFF	Light OFF

Reference Only

35. AUXILIARY ACCEL SWITCH

This switch is used when engine speed adjustment can not be done due to failure of accel grip.

* This switch is equipped with the slide lock.
This switch can be operated only when the slide lock is slid to upper side.

Middle speed side	Engine speed becomes approx. 1,500 to 1,600 min^{-1} (1,500 to 1,600 rpm).
Low speed side	Engine speed becomes approx. 800 min^{-1} (800 rpm).

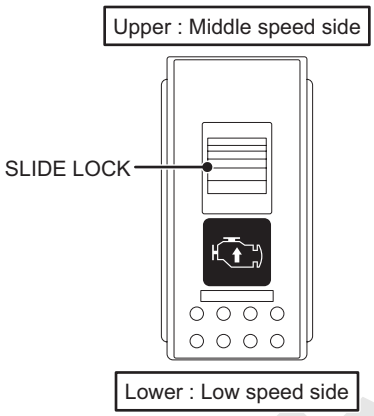

⚠ CAUTION

Do not use the auxiliary accelerator switch when the accelerator grip is normal.
If in case of using the auxiliary accelerator switch while the accelerator grip is in normal condition, the engine speed control by the grip can't be made.

36. EMERGENCY STOP CHECK SWITCH

This switch can check the auto-stop function of the boom and jib.

The auto stop function is normal if the boom raising, jib lowering and hook hoisting can't be done while this switch is kept in check side.

Switch returns automatically to original position when hand is released.

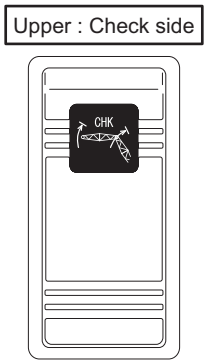

37. SWING ALARM SELECT SWITCH

This switch is to select swing alarm.

(Alarm light, buzzer)	Buzzer sound and swing flasher blinking.
Neutral position	Nothing occurs.
(Alarm light)	Swing flasher blinking

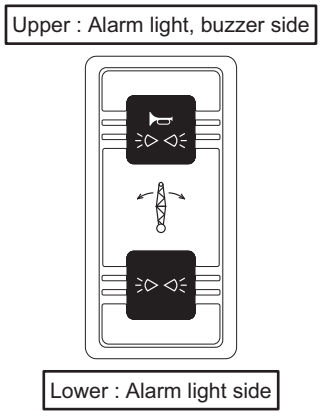

Reference Only

RIGHT SIDE SWITCH PANEL

38. AUX. ACTUATOR SELECT SWITCH

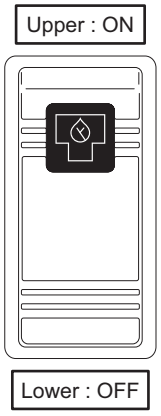

ON	(Not use on this model)
OFF	Gantry, tagline (option) can be controlled.

Normally use OFF position.

39. TRAVEL SPEED SELECT SWITCH

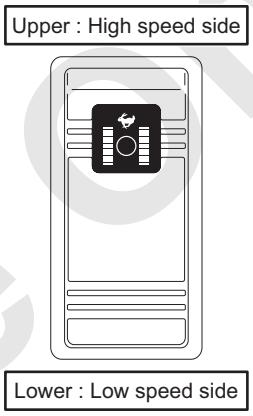

High speed side	Travel speed is fast.
Low speed side	Travel speed is slow.

⚠ CAUTION

Do not use the travel speed select switch during traveling.
It may cause deflected travel.

Reference Only

REAR SWITCH PANEL

40. G WINCH MAIN SWITCH

This is the main switch to use G winch.

As to the detail of G winch mode is to be used, refer to “2.3.11 HOOK HOISTING/LOWERING OPERATION”

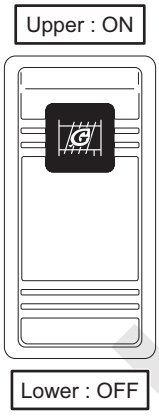

41. AUTO IDLE STOP SWITCH

This switch is to use of the auto idle stop function.

As to the detail of auto idle stop function is to be used, refer to “2.3.6 AUTO IDLE STOP FUNCTION”

ON	Auto idle stop function becomes effective.
OFF	Auto idle stop function becomes ineffective.

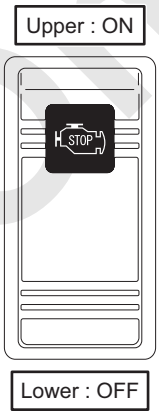

42. G ENGINE SELECT SWITCH

This switch is to select the G engine mode or power mode.

As to the detail of G engine mode, refer to “2.3.11 HOOK HOISTING/LOWERING OPERATION”

Power mode side	The max. engine speed becomes approximate 2,100 min^{-1} (2,100 rpm). This mode is suited to the heavy load lifting with less dropping the lifting speed compared with the G engine mode.
G engine mode side	The max. engine speed becomes approximate 1,725 min^{-1} (1,725 rpm). Lifting light load with high speed can be obtained.

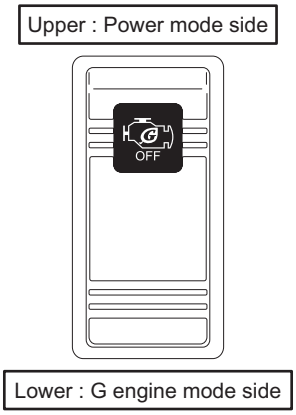

Reference Only

43. TRAVEL ALARM SWITCH (OPTION)

This is to select the travel alarm.

ON	Buzzer sound for warning of traveling.
OFF	No buzzer sound.

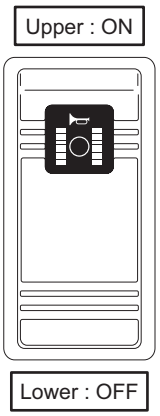

44. DRUM ROTATION SENSING SWITCH (OPTION)

This switch is to select the each drum rotation sensing effective or not.

ON	Move the movable part on grip proportionally to the each drum rotating speed.
OFF	No movement.

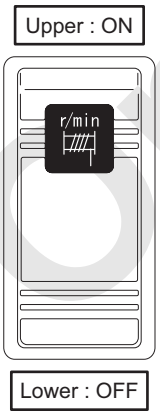

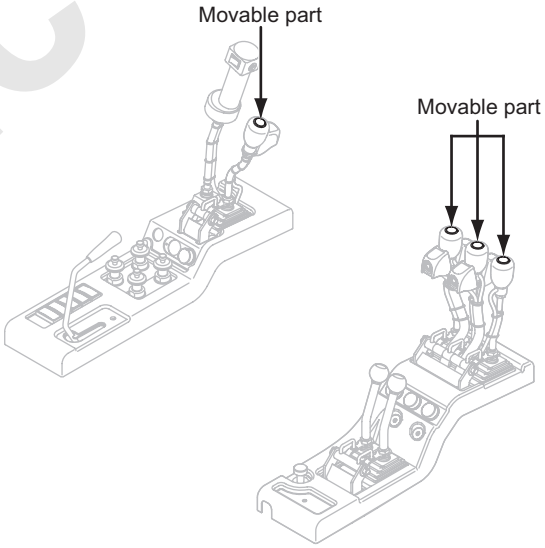

Reference Only

BYPASS SWITCH PANEL

45. RELEASE SWITCH MASTER KEY

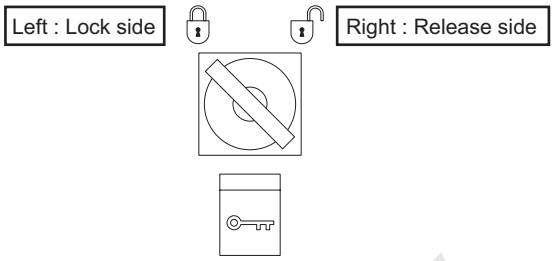

This is the master key to lock releasing the load safety device, boom overhoist and hook overhoist for safety.

Lock side	Can't be released the auto-stop functions.
Release side	Can be released the auto-stop functions.

The key can be taken off at the lock position.

CAUTION

During work bypass key must be kept and be controlled by work responsible person.

46. FREE FALL LOCK MASTER KEY

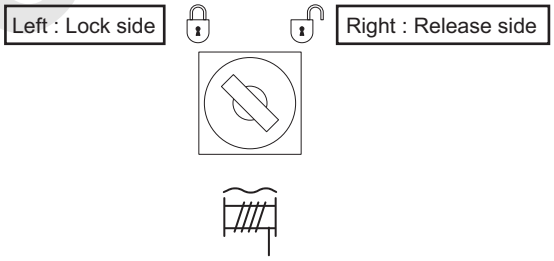

This is the master key for lock the free fall operation of the front, rear and third (option) drum for safety purpose.

Lock side	Can't be made the free fall operation.
Release side	Can be made the free fall operation.

When this key is in "LOCK" side, the free fall operation can't be made even the brake select switch is turned to "FREE FALL" side.

The key can be taken off at the lock position.

CAUTION

During work free fall lock key must be kept and be controlled by work responsible person.

Reference Only

47. MAIN CONTROLLER 1 BYPASS SWITCH

When the main controller 1 failed, swing control becomes possible.

48. MAIN CONTROLLER 2 BYPASS SWITCH

When the main controller 2 failed, each of front drum, rear drum, third drum and boom hoist control becomes possible.

Upper : Bypass side

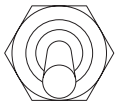

Lower : Normal side

⚠ CAUTION

Do not use these switches for other than emergency evacuation work due to failure of controller.

Reference Only

SWITCHES IN THE MONITOR (TOUCH PANEL)

49. SWING MODE SELECT ICON (FREE/HIGH SPEED) (OPTION)
50. SWING MODE SELECT ICON (FREE/LOW SPEED) (OPTION)
51. SWING MODE SELECT ICON (BRAKE/LOW SPEED) (OPTION)

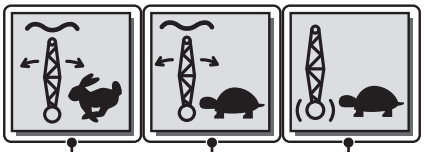

FREE/HIGH SPEED FREE/LOW SPEED BRAKE/LOW SPEED

This icon is to select the swing control and swing speed based on work contents.
This icon is displayed on the monitor and touching it can select the swing mode.
The selected mode icon is displayed in green.

* Push for more than 1 second.

Mode	Work content	Movement
Free/high speed	Crane, lifting magnet and clamshell work.	With the lever neutral mode becomes swing free. Select the swing speed based on the work.
Free/low speed	Long boom crane	
Brake/low speed	Long boom crane	With the lever neutral, swing brake is engaged. (Hydraulic brake)

* LOW SPEED At high idling about 50% of high speed.
At low idling about 70% of high speed.

At the long boom crane work, if the select icon is kept to brake/low speed side, operation is easy but hydraulic control is being applied to reduce swing stop shock and swing power is lowered and swing speed becomes slow.

⚠ CAUTION

In order to avoid damage on the base machine and the hydraulic components, the swing mode select icon should be manipulated at the swing brake switch is in the engage side with the engine at low idle.
Do not perform switching of swing mode while in swing motion.
Failure to observe this precaution may lead to parts damage.

⚠ CAUTION

This machine is only applicable to general crane works. In case use of the lifting magnet and clamshell and foundation works are required, consult authorized Manitowoc distributor.

Reference Only

52. CAMERA SELECT ICON (OPTION)

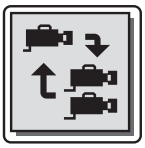

This icon is to select camera indication / non indication or to select the particular camera when plural cameras are equipped.

* Press more than 1 second of this icon.

53. WORK MODE SELECT ICON

This select icon is to perform the work smoothly based on work content.

* Press more than 1 second of this icon.

High speed	Normal crane work. (Auto variable displacement position)
Low speed	Special work. (Front, rear winch low speed fixed position) The switch turns to green when low speed is selected.

Select “LOW SPEED” when synchronization of front and rear drum speed is difficult for heavy load such as clamshell.

54. MENU ICON

This icon is used to indicate select item list.

55. DPF REGENERATION START ICON
56. DPF REGENERATION CANCEL ICON

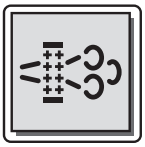

DPF REGENERATION START ICON

DPF REGENERATION CANCEL ICON

This icon is for stating or resume of the refreshing, manual and auto regeneration. When under processing these task, the icon transition to DPF regeneration cancel icon.
As to the detail of auto regeneration, refer to “2.3.4 EMISSION CONTROL DEVICE”

57. FINAL LIMIT RECOVERY ICON

This icon is for resume the crane operation temporary for evacuation purpose, when crane operation becomes impossible due to the final limit function of the inducement control.
As to the detail of inducement, refer to “2.3.5 TIER4 FINAL INDUCEMENT CONTROL”

Reference Only

58. ENGINE STOP ICON

This icon is to stop the engine simply.
After stop the engine, the condition becomes same as idling-stop condition.
To restating the engine, operate either the acceleration grip or the foot acceleration.

59. INCHING ICON

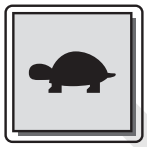

This icon is to set the inching speeds of the front, rear, third (option) and boom drum and traveling speed.
Each speed will be 1/4 of normal speed when this icon turns ON.

* Press more than 1 second of this icon.

60. BOOM, JIB LOWERING ICON

This icon is used to lower the boom, jib to the out of work area.

* Press more than 1 second of this icon.

61. ASSY/DISASSY ICON

This icon is used to select the assy/disassy mode or the work mode.

* Press more than 1 second of this icon.

62. ENGINE WARNING LAMP

This lamp light up in red color when functioning the inducement control or the error code (P code, U code)is appeared and light up in yellow when require the cooling to the exhaust system.

63. G ENGINE INDICATION LAMP

The lamp lights up when G engine mode is selected.

Reference Only

64. G WINCH INDICATION LAMP

These lamps on the both sides lights up to yellow when “40. G WINCH MAIN SWITCH” is turns ON.
When at the G WINCH mode, the lamp on the corresponding drum side lights up to green.

65. AUTO IDLE STOP INDICATION LAMP

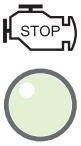

This lamp lights up when the engine is stopped due to the auto idle stop function.

66. FRONT DRUM FREE FALL INDICATION LAMP
67. REAR DRUM FREE FALL INDICATION LAMP
68. THIRD DRUM FREE FALL INDICATION LAMP (OPTION)

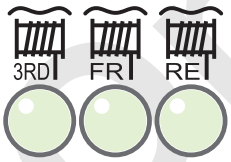

This lamp lights up when drum becomes free fall mode.

69. INCHING SPEED LAMP

This lamp lights up when “59. INCHING ICON” is turned to Inching speed side.

70. ELECTRIC OIL COOLER WORK INDICATING LAMP

This lamp lights up when the electric oil cooler is working.

71. REMOTE CONTROL CONNECTION LAMP

This lamp lights up when the remote control box is connected to the base machine.
As to the detail of the remote control switch box, refer to “4.2 HANDLING THE REMOTE CONTROL SWITCH BOX”.

Reference Only

72. HYDRAULIC OIL TEMPERATURE LAMP

This lamp indicates the hydraulic oil temperature by color.

Red	90 °C (194 °F) or higher.
Green	90 °C (194 °F) or lower.

* The red color indication remains until lower the oil temperature to 80 °C (176 °F) after once lights up to red.

73. EXHAUST SYSTEM COOLING CALL LAMP

Indicate the necessity of cooling to exhaust system by the lamp color.

Yellow	Require the cooling (refer to following caution)
Green	Normal condition

⚠ CAUTION

Do not stop the engine when the exhaust system cooling call lamp turns yellow.
Absolutely perform the cool down (keep the engine running at low revolution with no load) and must be stop the engine when the exhaust system cooling call lamp turns green.
Stop the engine with exhaust system temperature is high condition leads to adverse effect to the parts life of the emission control device and also if the related parts of emission control device defects, the engine output will be limited step by step.
As to the output limitation, refer to the article "2.3.4 EMISSION CONTROL DEVICE" for the detail.

Reference Only

74. ENGINE COOLANT TEMPERATURE GAUGE

This indicates the engine cooling water temperature.
The scale indicates is divided into 10.

White	6 blocks or less	60 °C (140 °F) or higher to less than 100 °C (212 °F)
Yellow	7 to 9 blocks	100 °C (212 °F) or higher to less than 108 °C (226 °F)
Red	10 blocks	108 °C (226 °F)

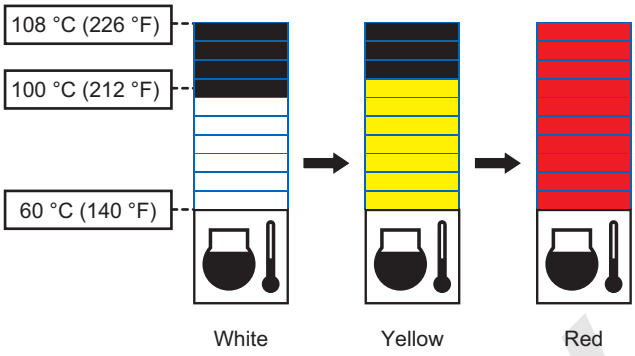

75. FUEL BAR GAUGE

This indicates the fuel level.
The scale indicates is divided into 10.

Max. Indication	355 L (93.7 gal)
Min. Indication	44 L (11.6 gal) or less

The bar gauge color changes from white to red at lowest two blocks.

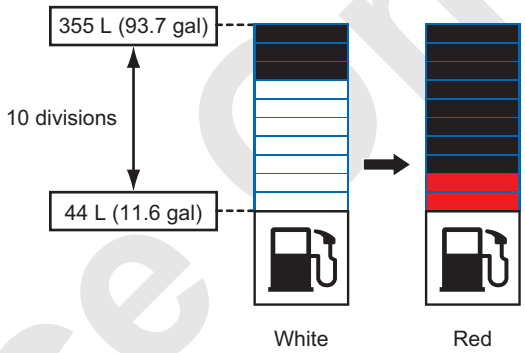

76. DEF/AdBlue® BAR GAUGE

This indicates the urea solution level
The scale indicates is divided into 10.

Max. Indication	60 L (15.8 gal)
Min. Indication	EMPTY

The bar gauge color changes from white to yellow when reaches to 3 blocks and changes to red when 2 blocks or less.

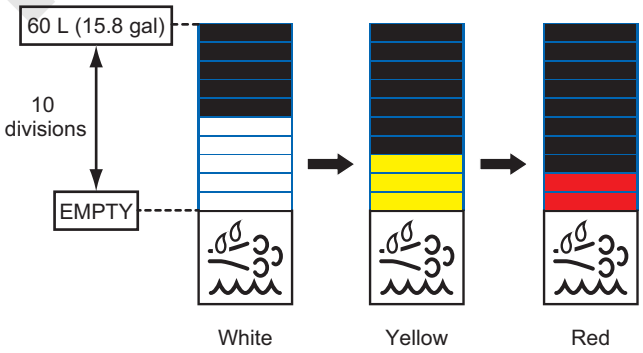

Note

The warning and engine output limitation will be issued depending on the remaining amount of the DEF/AdBlue® when the level reaches lowest three blocks.
As to the detail of output limitation, refer to "2.3.4 EMISSION CONTROL DEVICE".

Reference Only

77. SOOT ACCUMULATION BAR GAUGE

This bar gauge indicates guide of soot accumulation in the DPF.
The scale indicates is divided into 10.

10 Blocks	Red
5 Blocks or more	Yellow to orange
3 Blocks or more	White to yellow

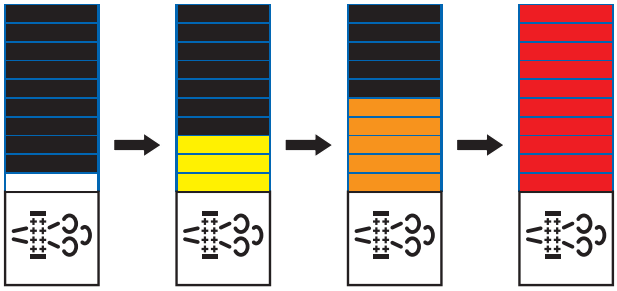

Note

Depending on the accumulation of soot (number of bar gauge), the soot burning (regeneration) operation is to be required.

Reference Only

2.2.3 VARIOUS SETTING OF MONITOR

Screen setting, option setting etc are possible.

1. Display of set menu

(1) Press MENU icon.

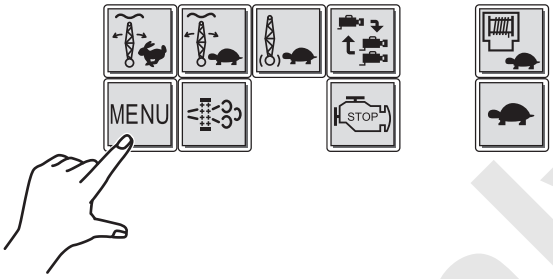

(2) Press in the displayed menu.

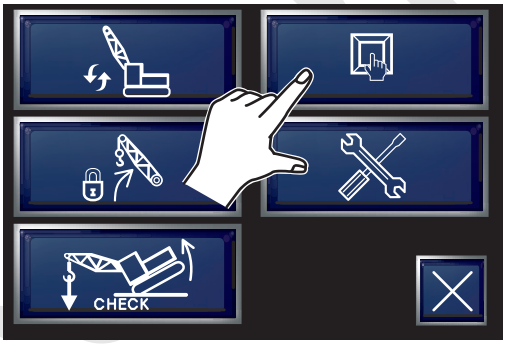

(3) List of setting items are displayed.

Reference only

2. Time setting

Carry out the time setting.

(1) Press ⊕ in the setting items.

(2) The current set year, month, day, time and minute are indicated.
Push the item required changing, the item will be highlighted.

(3) Under this condition, input numeral with the right side numeric keypad.
If there are other areas to change, input required numeral with same procedure.

(4) After input is completed, press OK.

(5) The setting is completed.

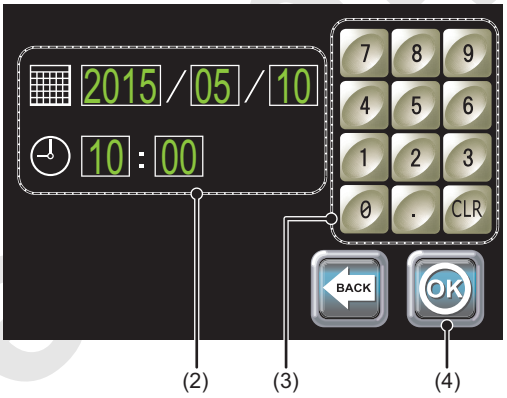

Reference only

3. Lever detent force (holding force) setting

Set the middle points detent force (1st speed at confluence circuit selected).
Set the detent force as required.

(1) Press in the setting items.

(2) The current set detent forces are indicated.
(3) Can be set the detent force on the front and rear drum control lever individually.
The detent force becomes larger as corresponding with the number indicated and the number can be changed in between 0 and 150.

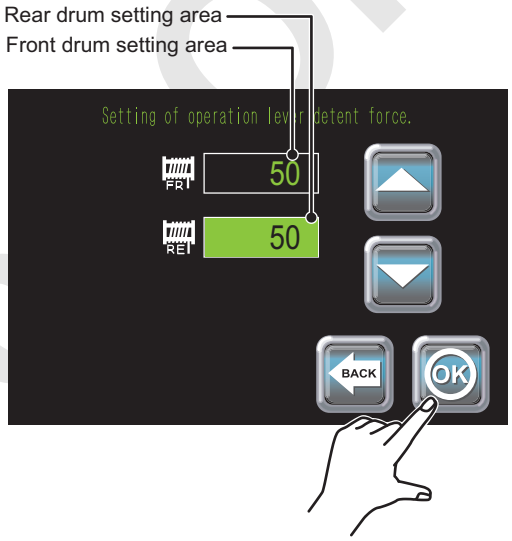

(4) Front drum setting
Press front drum setting area.
Change the number by pressing of or .

(5) Rear drum setting
Press rear drum setting area.
Change the number by pressing of or .

(6) After input is completed, press .
(7) The setting is completed.

Reference Only

4. Wind velocity warning setting (option).

In case of anemometer (option) is equipped, set the point of wind velocity to issue the warning.

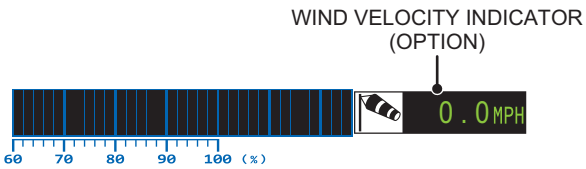

(1) Press in the setting items.

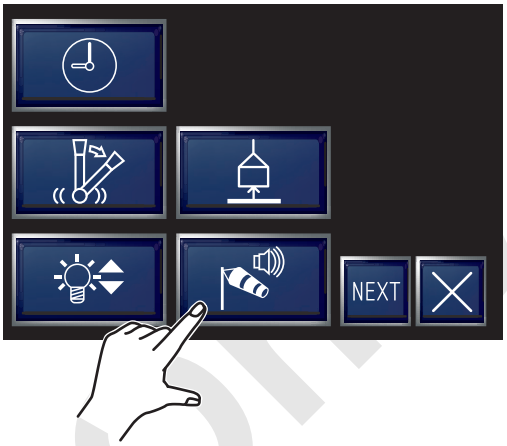

(2) Wind velocity measurement value and current warning issuing set value are indicated.
When push the warning issuing set value, pushed numeral part will be highlighted.

(3) Under this condition, input numeral with the right side numeric keypad.

(4) After input is completed, press .

(5) The setting is completed.
When the wind velocity exceeds the set value, the indication of wind velocity turns to red and buzzer sound is issued.

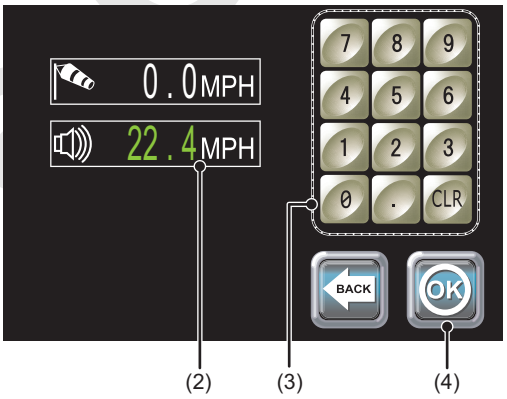

Reference Only

5. Drum rope layer setting

To use load height meter properly, adjustment of drum rope layer is require whenever the drum has been turned freely during attachment assembly or disassembly.
If the adjustment insufficient, height indication would not vary or indicated value would become deviate from actual.
Ensure to adjust.
The adjustment is required on front drum and rear drum respectively.
The procedure is same for both drums.
Front drum adjustment is explained here as an example.

(1) Hoist or lower the main hook and suspend the hook when the wire rope changes its layer.
(2) Press [ ] in the setting items.

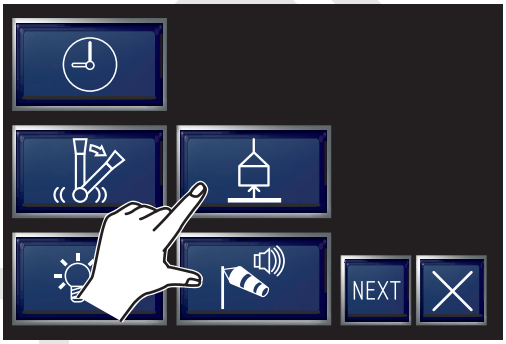

Reference Only

(3) Both front and rear drums layer are indicated. When push the item where requires changing, pushed numeral part will be highlighted.

(4) Under this condition, input numeral with the right side numeric keypad. In case of the border between 4th and 5th layer for example, input “5”.

(5) After input is completed, press OK.

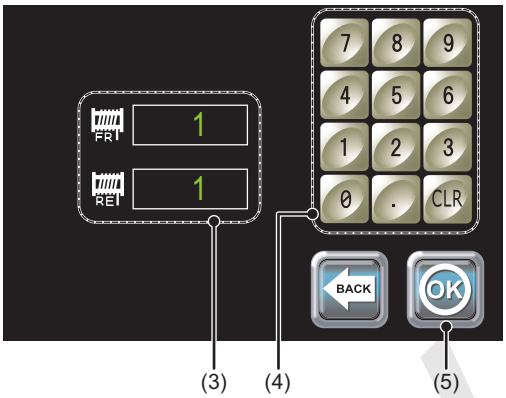

- The number of layer can be determined by the distance from the drum flange circumference and the wire rope. Refer to the figure below;

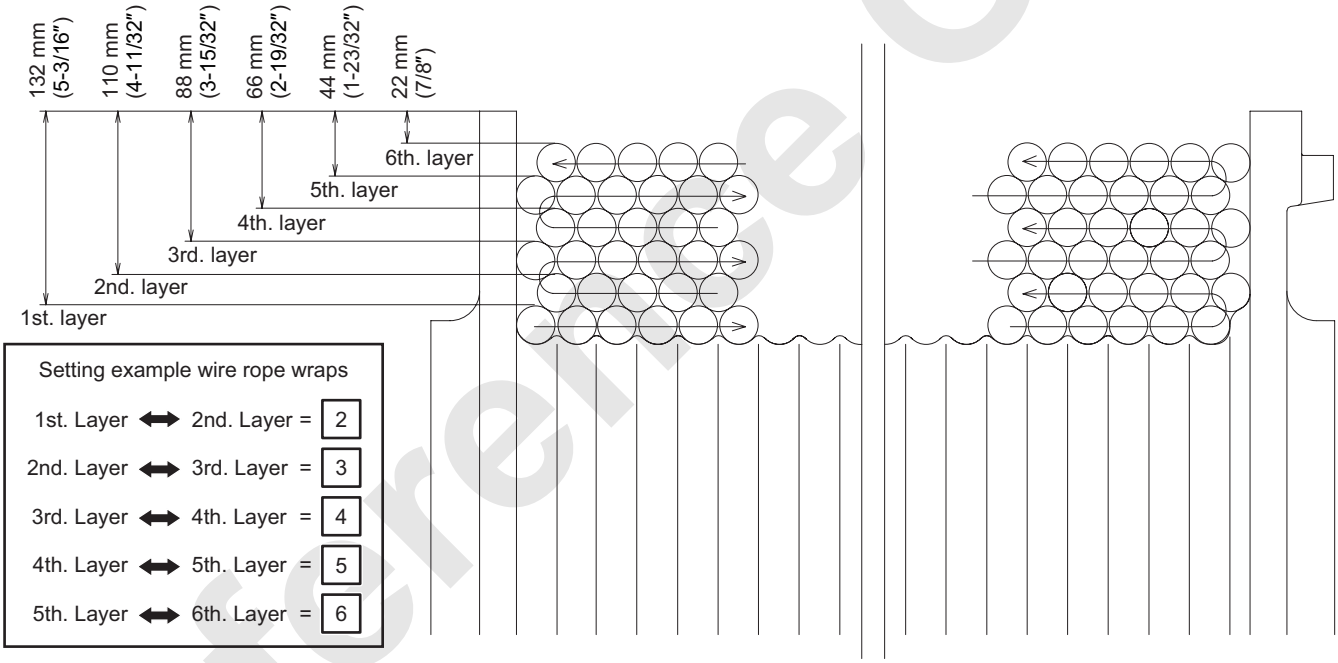

Reference Only

(6) Confirm the height indication varies as per setting by referring to “7. handling of the height meter” described in the next page.

(7) If there is any abnormality in height indication, the sensor gap adjustment may be incorrect. Perform the gap adjustment of the proximity sensor.

- GAP ADJUSTMENT PROCEEDURE

  Install the sensor as align with the center of fin and adjust the clearance of 3 mm (1/8 in.) with the drum.

  Allowance of gap : 2.5 to 5 mm [3/32 to 3/16 in.]

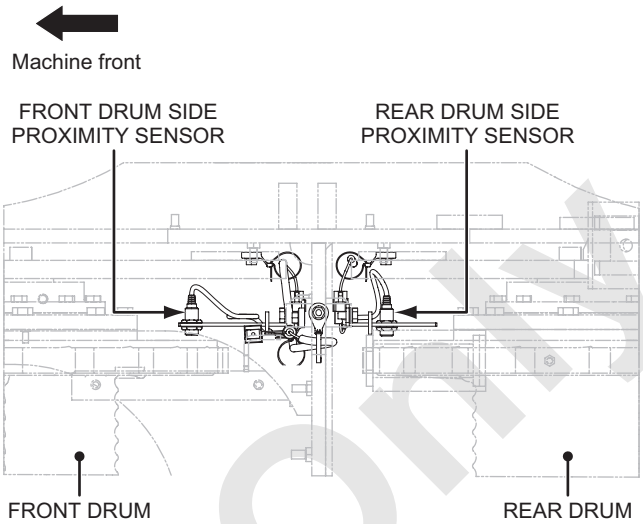

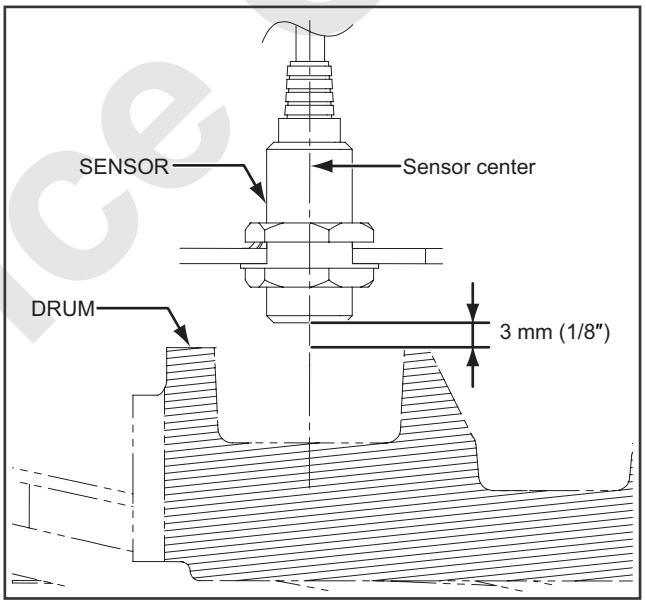

(8) Setting is complete.
In case still the indication abnormality is existed, contact authorized Manitowoc distributor for further inspection.

Reference Only

6. Brightness setting of monitor

(1) Press in the setting items.

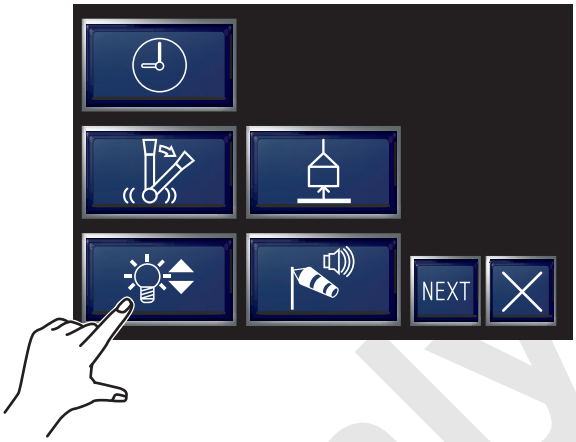

(2) The current set monitor brightness is indicated. By pushing the bar part, 8 steps of brightness can be selected as longer bar is higher.
(3) After input is completed, press OK.
(4) The setting is completed.
(5) The set monitor brightness will be reflected when “32. WORK LIGHT SWITCH” is activated.

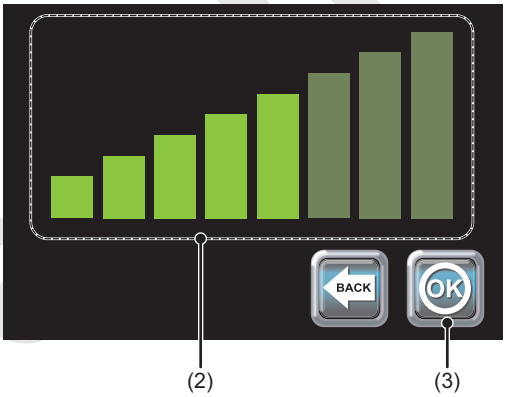

7. Handling of the height meter

(1) Select the hook to be used.
Press the figure area of the hook to be used.
Selected hook is indicated dark and non selected hook is indicated light.
(2) Check to see that the indicated number of part line of the hoist rope matches with actual condition.
(3) Move the hook to certain height and press the height indication area.
Height value is reset and “0.0 m” is to be indicated.
(4) When the hook is hoisting/lowering or boom/jib raising/lowering is performed, the height becomes plus indication if the height is higher than the starting point of “0.0 m” and minus indication if lower.

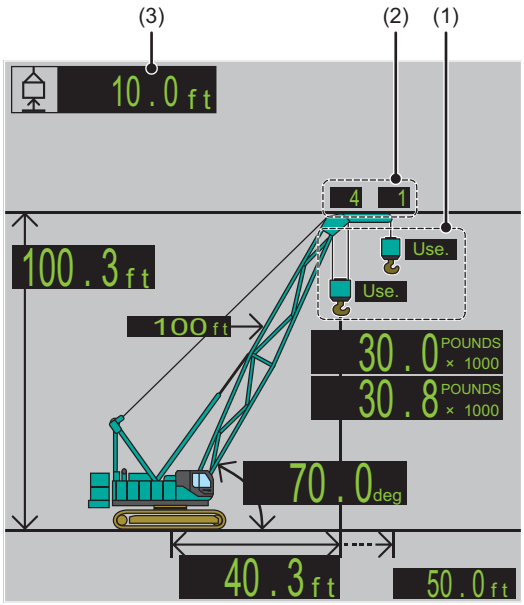

Reference only

8. Handling of the bypass switch when touch panel of the monitor dose not functioning

   In case of abnormal phenomenon occurs on the monitor as no functioning of touch panel at the boot up, the crane operation becomes possible by the following bypass processing.

(1) Remove a fuse F17 (5A) for not applying the power to the monitor.
(2) Start the engine.
(3) The main controller-2 bypass switch located on the bypass switch panel of the monitor stand to bypass side once and return the switch to normal side immediately.
(4) Confirm each levers are ready for operation after the function lock lever is shifted to work side.
(5) If not obtain the crane operation after the step (4) above has been carried out, repeat step (3) again and reconfirm of the readiness for operation.

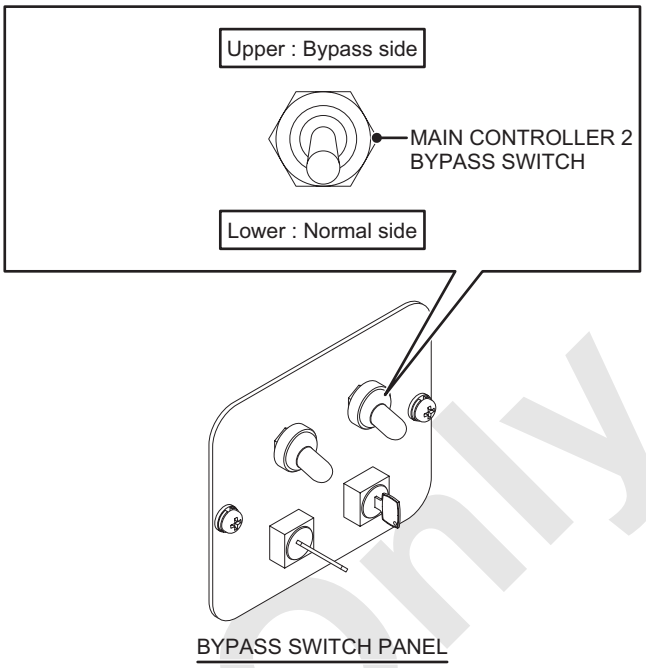

⚠ CAUTION

- **Do not use these switches for other than emergency evacuation work due to failure of controller.**
- **Extra care to take an evacuation work due to the indication is not available on the monitor. Failure to observe this precaution may result in a serious accident.**
- **After the evacuation is completed, contact an authorized Manitowoc distributor as soon as possible.**

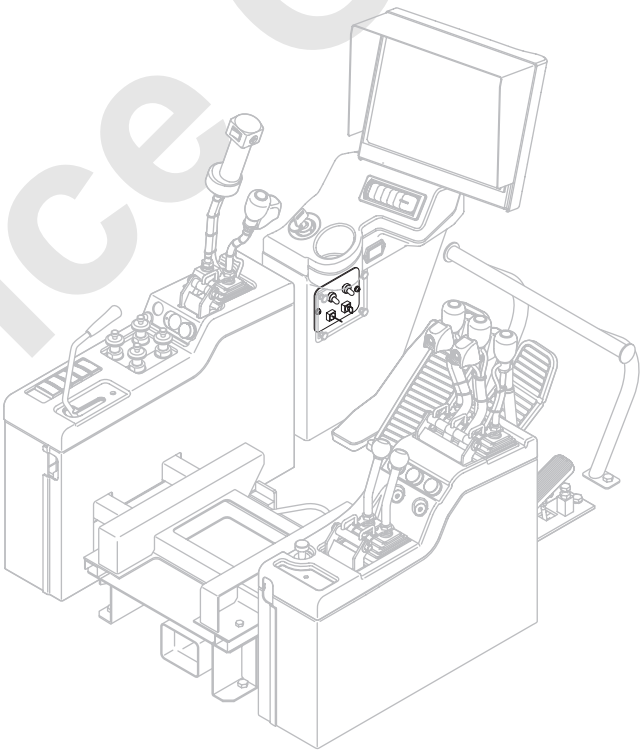

Reference Only

2.2.4 ANEMOMETER INSTALLATION (OPTION)

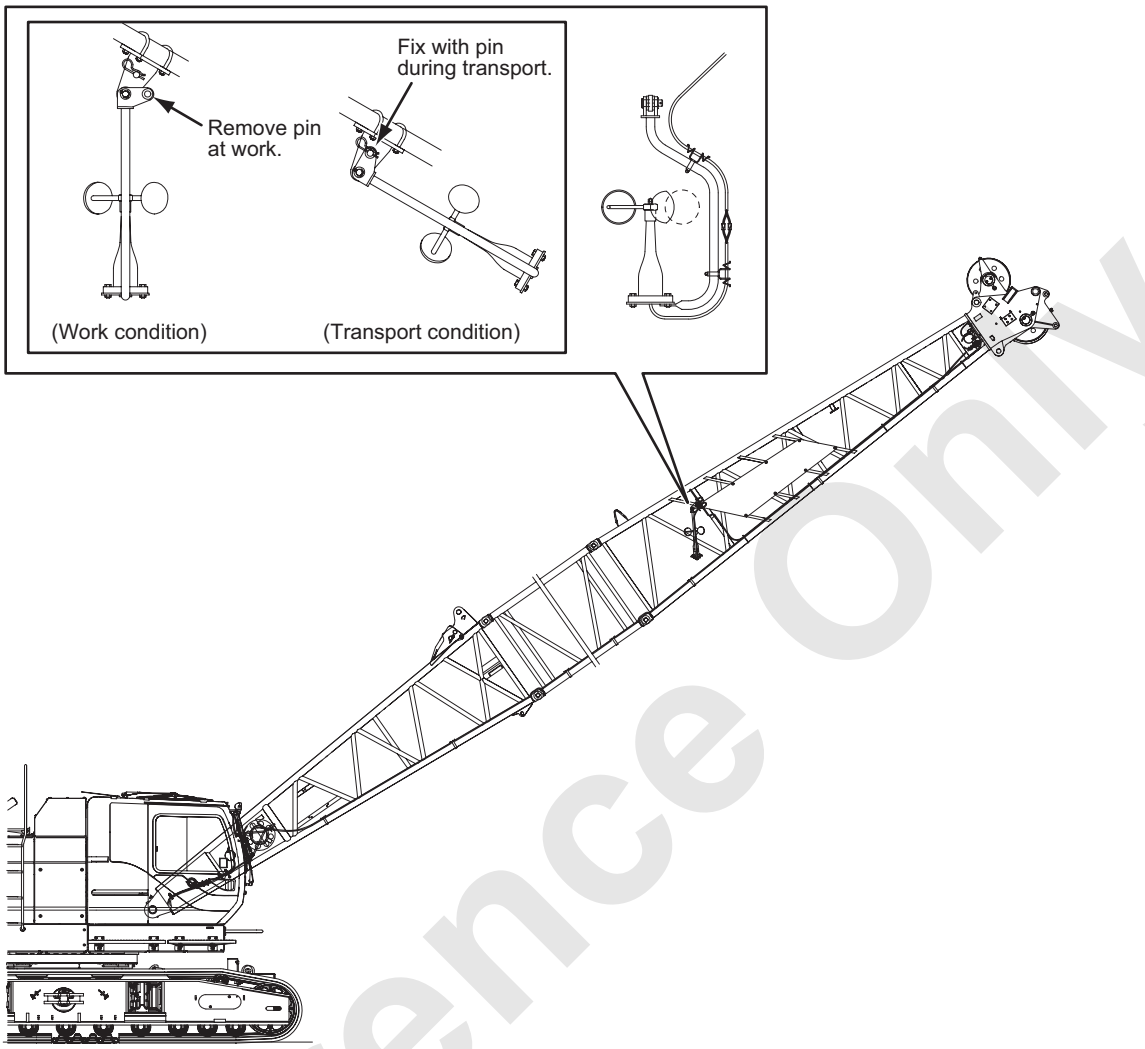

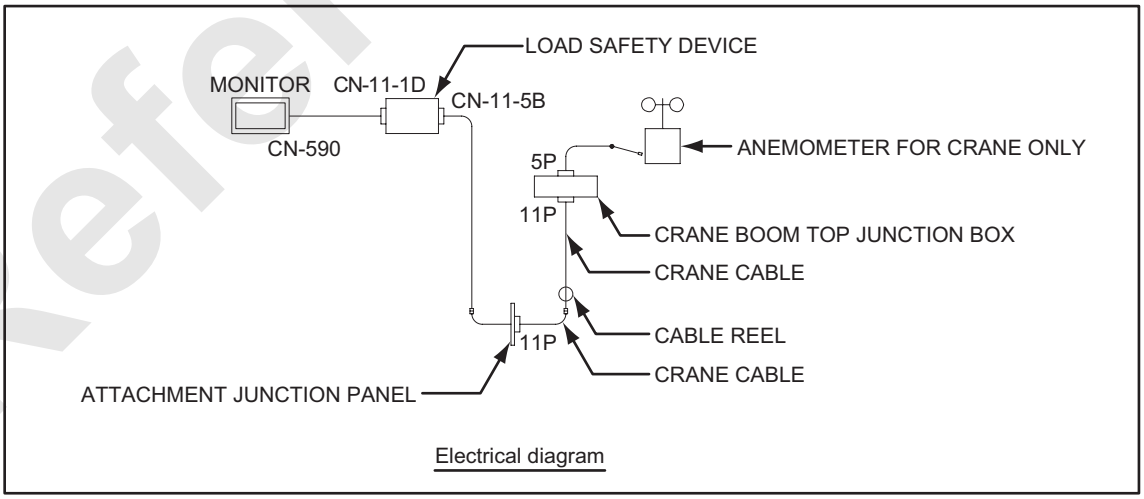

Electrical diagram

Reference Only

2.2.5 AIR CONDITIONER

NAME OF THE AIR CONDITIONER PARTS

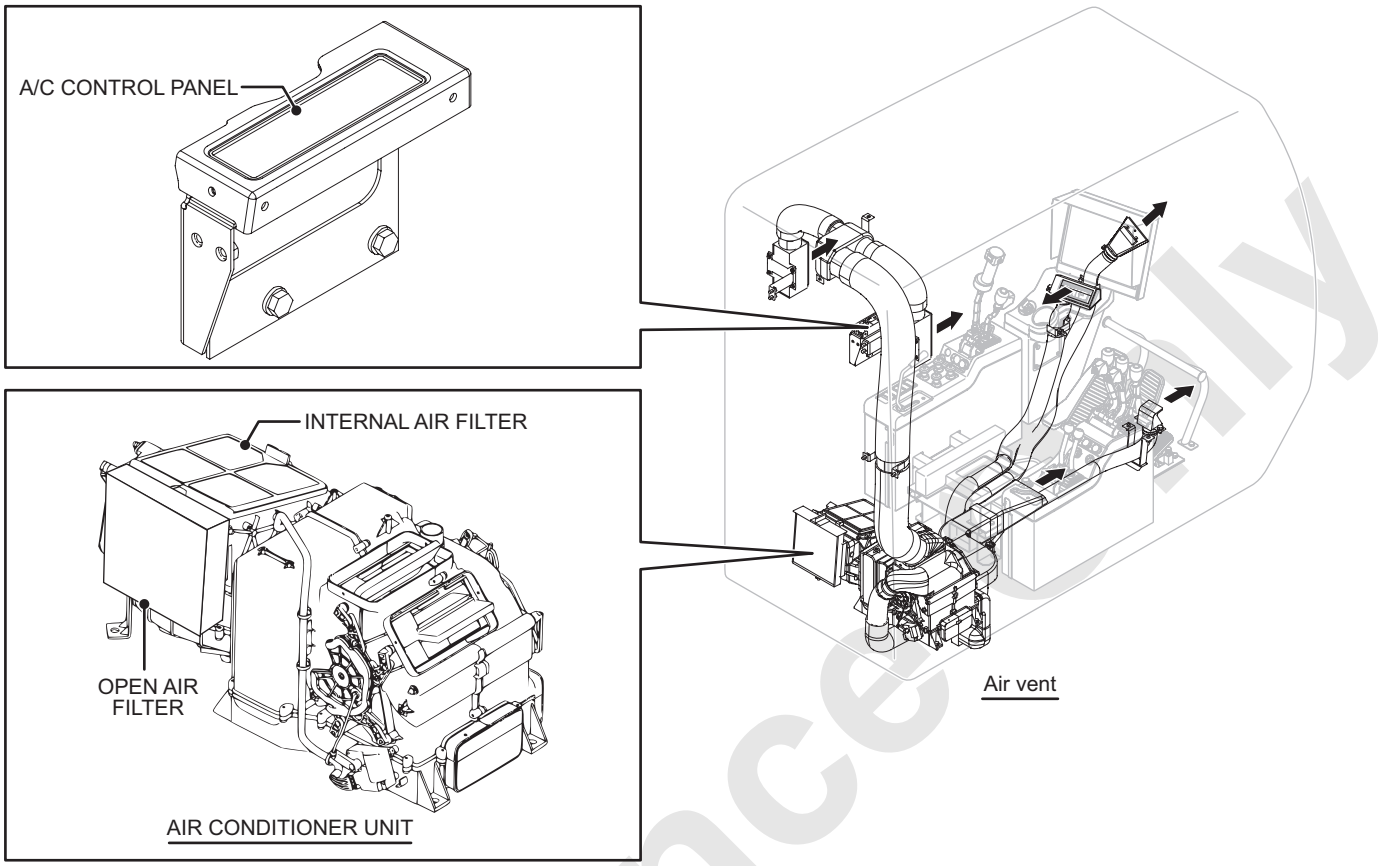

NAME OF THE CONTROL PANEL

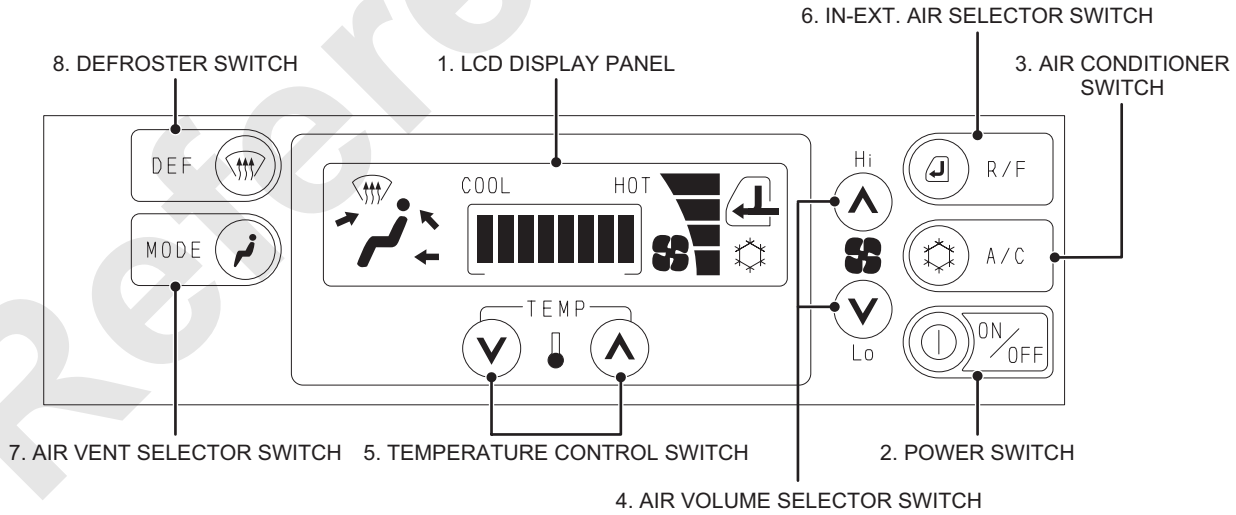

Reference Only

FUNCTION OF EACH CONTROL

1. LCD DISPLAY PANEL

Air volume setting etc. are displayed.

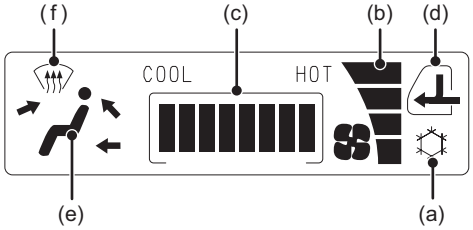

2. POWER SWITCH (ON/OFF SWITCH)

It turns ON or OFF the air conditioner.
When this switch is pushed at the first time, the air conditioner starts on factory set mode.
When this switch is pushed, air conditioner starts with previous set mode.

3. AIR CONDITIONER SWITCH (A/C SWITCH)

Every time when this switch is pushed, the air compressor alternates ON/OFF.
When the air conditioner is ON, ❄ lights up on the LCD display (a).

4. AIR VOLUME SELECTOR SWITCH (FAN SWITCH)

Air volume can be changed by pushing this switch when air conditioner is running.

⌃	Increase air volume.
⌄	Decrease air volume.

Set air volume is displayed on the LCD display (b).

LCD display				
Air volume	Low	Medium	High	Max. high

Reference Only

5. TEMPERATURE CONTROL SWITCH (AIR CONDITIONER TEMP. SET)

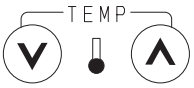

Pushing this switch changes temperature setting when the air conditioner is running.

⌃	Rises temperature (blowing air temp.)
⌄	Lowers temperature (blowing air temp.)

Set temperature COOL HOT is displayed on LCD display (c).

6. IN-EXT. AIR SELECTOR SWITCH (R/F SWITCH)

Every time when this switch is pushed, internal air / external air alternate.

	Internal air circulation
	External air take in

Setting is displayed on LCD display (d).

7. AIR VENT SELECTOR SWITCH (MODE SWITCH)

Every time when this switch is pushed, blow out opening changes on in sequence.

LCD display				
Blow out opening	Face	Vent	Bi level	Foot
Blow out direction	Front	Front / upper rear	Front / upper rear and foot	Foot *

* Air blows from defroster also.

Setting is displayed on LCD display (e).

8. DEFROSTER SWITCH (DEF SWITCH)

Every time when this switch is pushed, blow out opening changes to defroster.

Blow out opening	Defroster
Blow out direction	Front windscreen*

* Air blows from foot too.

is displayed on LCD display (f).

Reference Only

AIR CONDITIONER CONTROL

1. To start or stop air conditioner

   Push (Power switch).

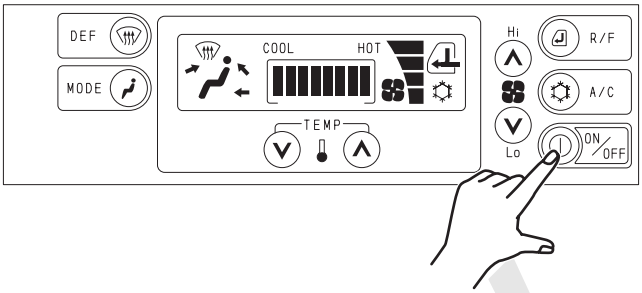

2. To cool

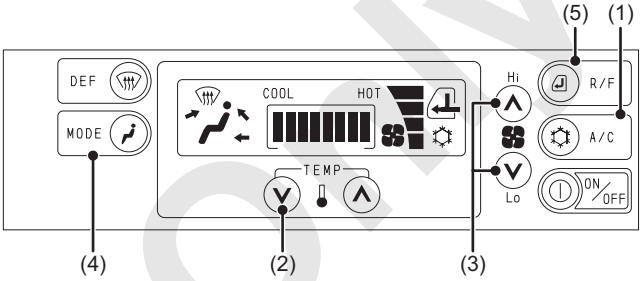

(1) Push (Air conditioner switch).
(2) Push (Temperature control switch) to indicate temperature display.
(3) Push the air volume selector switch for required air volume setting.
(4) Push (Air vent selector switch) for (Vent) position.
(The above is recommended position and can be chosen as desired.)
(5) By pushing (In-ext. air selector switch), set the selector to (Internal air circulation).
(The above is recommended position and can be chosen as desired.)
If the A/C cools down too low, adjust the temp. or air volume by (2), (3).

- (Air conditioner switch) is not pushed, the A/C does not cool but only air flows.
- While defrosting the windows, do not set the temperature too low.
- Cold air may make windows foggy from outside

Reference Only

3. To warm

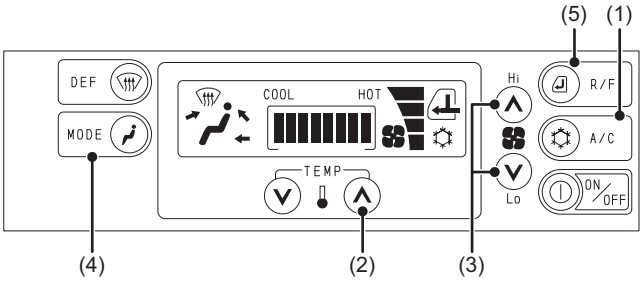

(1) Push A/C (Air conditioner switch).
(2) Push TEMP (Temperature control switch) to indicate COOL HOT temperature display.
(3) Push the air volume selector switch for required air volume setting.
(4) Push MODE (Air vent selector switch) for (Foot position.
(The above is recommended position and can be chosen as desired.)
(5) By pushing R/F (In-ext. air selector switch), set the selector to (Internal air circulation).
(The above is recommended position and can be chosen as desired.)
If the A/C warms up too high, adjust the temp. or air volume by (2), (3).

- If A/C (Air conditioner switch) is pushed, the A/C operates on dry air warming.
- If blow out opening is set to “Foot”, small amount for air bows from defroster also.

Reference Only

4. To defrost on the windows

(1) Push A/C (Air conditioner switch).
(2) Push TEMP (Temperature control switch) to indicate COOL HOT temperature display.
(3) Push the air volume selector switch for “Max, high” air volume.
(4) Push DEF (Defroster switch) to change the blow out opening to (Defroster) position.
(5) By pushing R/F (In-ext. air selector switch), set the selector to (Internal air circulation).

- By pushing MODE (Air vent selector switch) blow out opening return to previous one before DEF (Defroster switch) is pushed.
- When blow out opening is set to “Defroster”, small amount of air comes out from foot also.

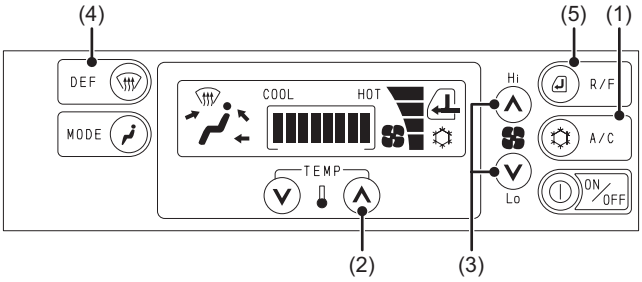

5. To defog on the windows

(1) Push A/C (Air conditioner switch).
(2) Push the air volume selector switch for required air volume setting.
(3) Push DEF (Defroster switch) to change the blow out opening to (Defroster) position.
(4) By pushing R/F (In-ext. air selector switch), set the selector to (External air take in).

- If quick defogging is required, set the air volume to “Max, high” by (2).
- By pushing MODE (Air vent selector switch) blow out opening return to previous one before DEF (Defroster switch) is pushed.
- When blow out opening is set to “Defroster”, small amount of air comes out from foot also.

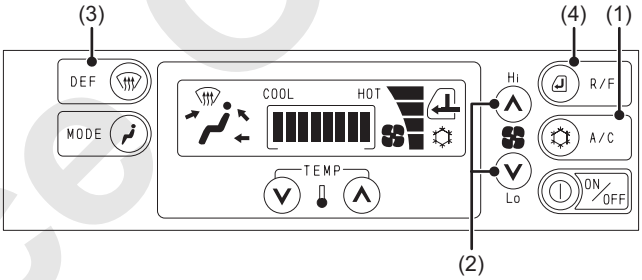

Reference Only

2.2.6 AIR CONDITIONER FOR AUTO-IDLE STOP (AIS AIR CONDITIONER) (OPTION)

- AIS air conditioner is to work as an auxiliary air conditioner when the engine stops due to auto idle stop function.
  This is not to keep the temperature in the operator's cabin comfortably.
- Can be adjust the blowing direction by change the air vent.
- Avoid to use of AIS air conditioner long period due to power consumption is large.
  If has been used long period, the next auto idle stop interval become longer according to the degree of battery discharge.
- When the filter clogging, the performance of an air conditioner is drops.
  Clean the filter periodically.
  The filter can be pulling out forward to the above.
- Should be use the AIS air conditioner with the filter otherwise lead to damage the internal parts.

Reference Only

NAME OF THE AIS AIR CONDITIONER PARTS

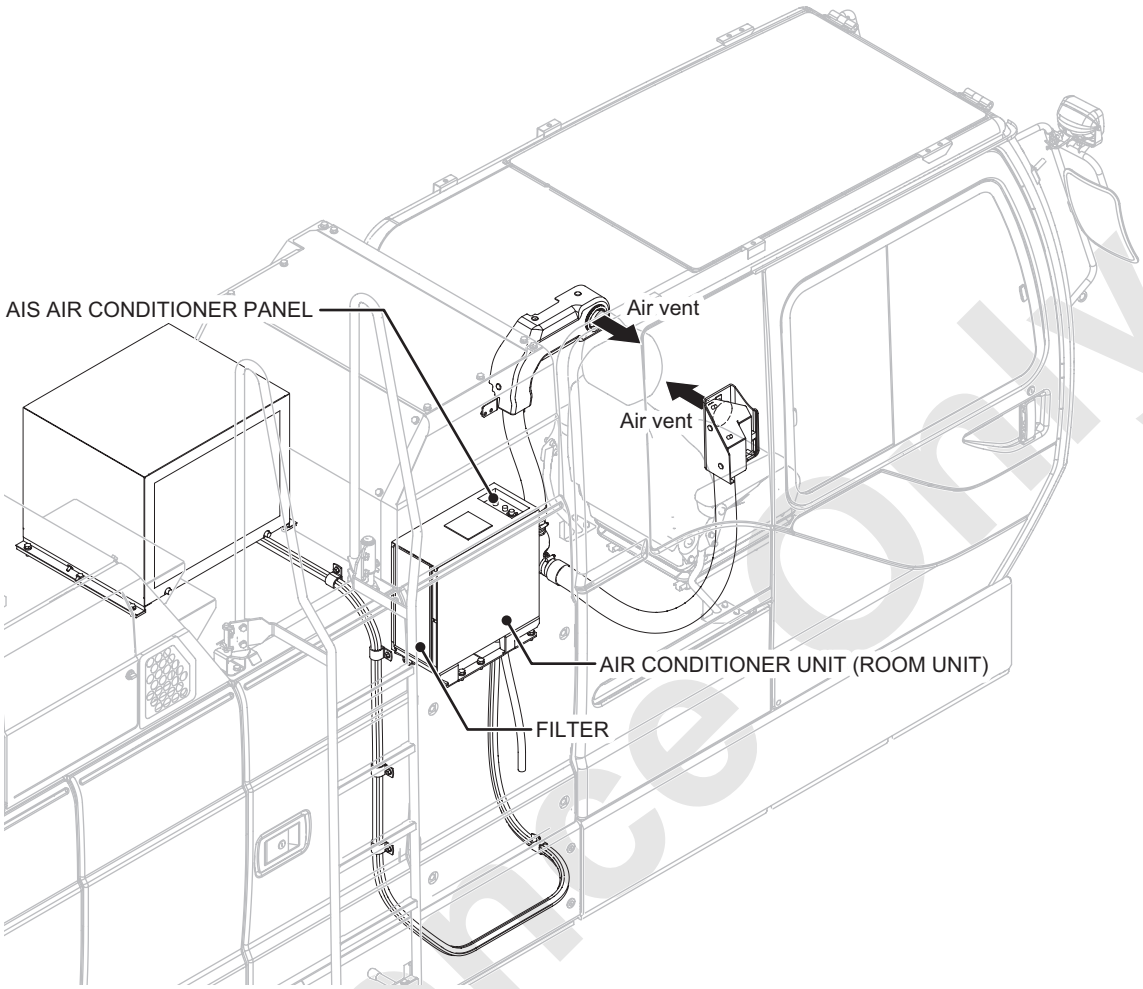

NAME OF THE CONTROL PANEL

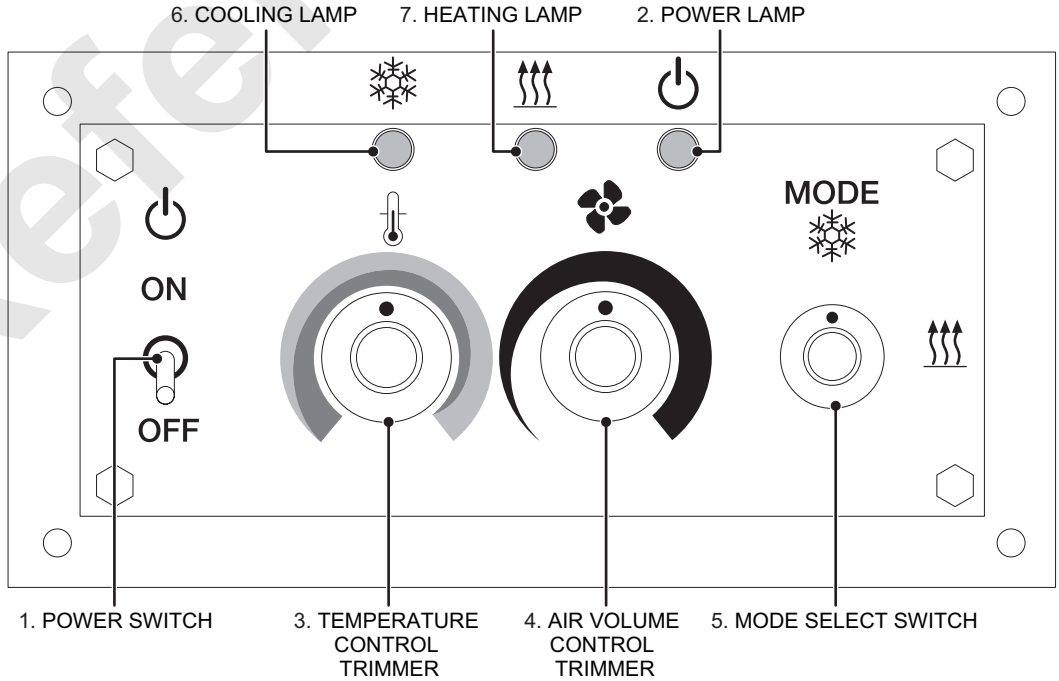

Reference Only

FUNCTION OF EACH CONTROL

1. POWER SWITCH (ON/OFF SWITCH)

It turns ON or OFF the AIS air conditioner.
When the switch is in ON position, the AIS air conditioner starts when the engine stops due to the auto idle stop function.
(Even the switch is ON position, AIS air conditioner will not start other than the auto idle stop is functioning.)

2. POWER LAMP

The lamp lights up while the AIS air conditioner is in working.

3. TEMPERATURE CONTROL TRIMMER

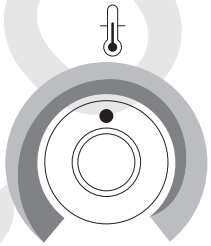

Control the AIS air conditioner temperature.
Rotate clockwise, the temperature rise and counterclockwise is lower.

4. AIR VOLUME CONTROL TRIMMER

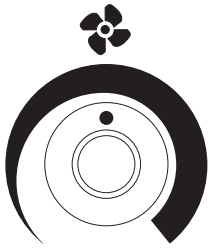

Control the AIS air conditioner air volume.
Rotate clockwise, the air volume increase and counterclockwise is decrease.

5. MODE SELECT SWITCH

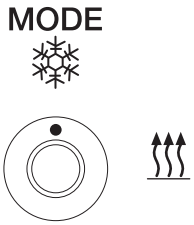

Switching the AIS air conditioner to cooling or heating.

❄	Cooling operation
♨	Heating operation

6. COOLING LAMP

The lamp lights up while in cooling operation.

7. HEATING LAMP

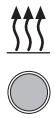

The lamp lights up while in heating operation.

Reference Only

2.2.7 AM/FM RADIO

NAME OF THE CONTROL PANEL

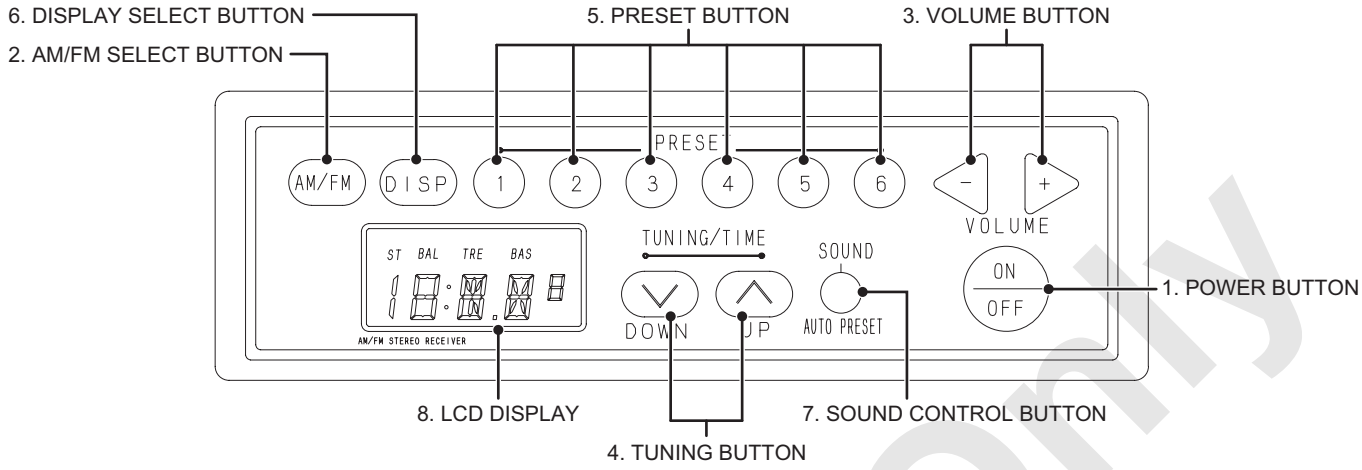

FUNCTION OF EACH AREA

1. **POWER BUTTON**
   Turn radio ON / OFF.

2. **AM/FM SELECT BUTTON**
   Select band.
   (AM / FM1 / FM2)

3. **VOLUME BUTTON**
   Control volume.

4. **TUNING BUTTON**
   Select frequency, control step for sound control, adjust time.

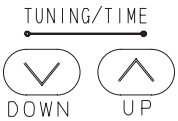

5. **PRESET BUTTON**
   Call preset frequency and register.

6. **DISPLAY SELECT BUTTON**
   Select display.
   (Frequency / Time)

7. **SOUND CONTROL BUTTON**
   Control sound.
   (Balance / Bass / Treble)

8. **LCD DISPLAY**
   Display frequency, time etc.

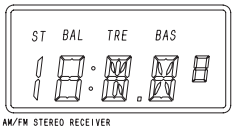

Reference Only

DETAIL OF LCD DISPLAY

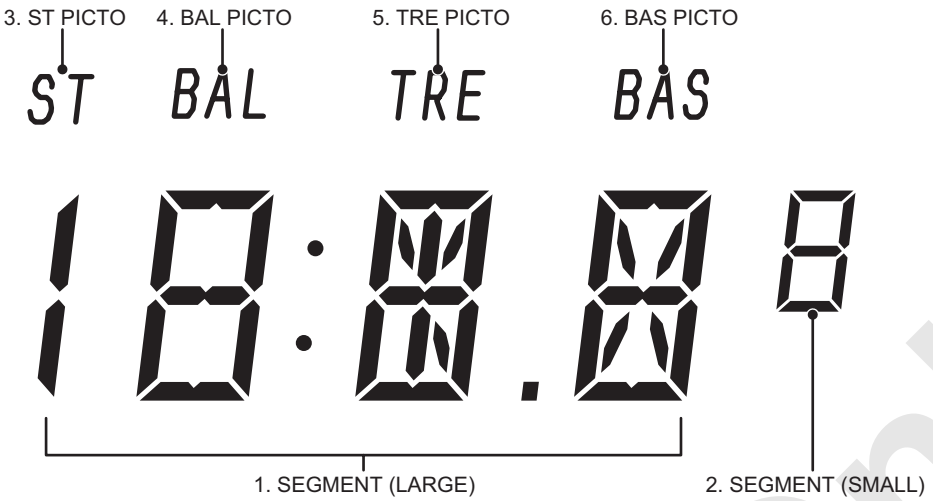

1. **SEGMENT (LARGE)**
   To display band name, frequency, time, word/ number.

2. **SEGMENT (SMALL)**
   To display frequency for FM 50 kHz step system.

3. **ST PICTO**
   Lights up when stereo is received at FM1/FM2.

4. **BAL PICTO**
   Lights up when balance is selected at sound control.

5. **TRE PICTO**
   Lights up when treble is selected at sound control.

6. **BAS PICTO**
   Lights up when bass is selected at sound control.

Reference Only

FUNCTION AND DISPLAY

Function and LCD display of this machine is explained here.

1. Normal condition

   From OFF condition, by pressing “POWER BUTTON” the radio turns ON and receives presently selected frequency.

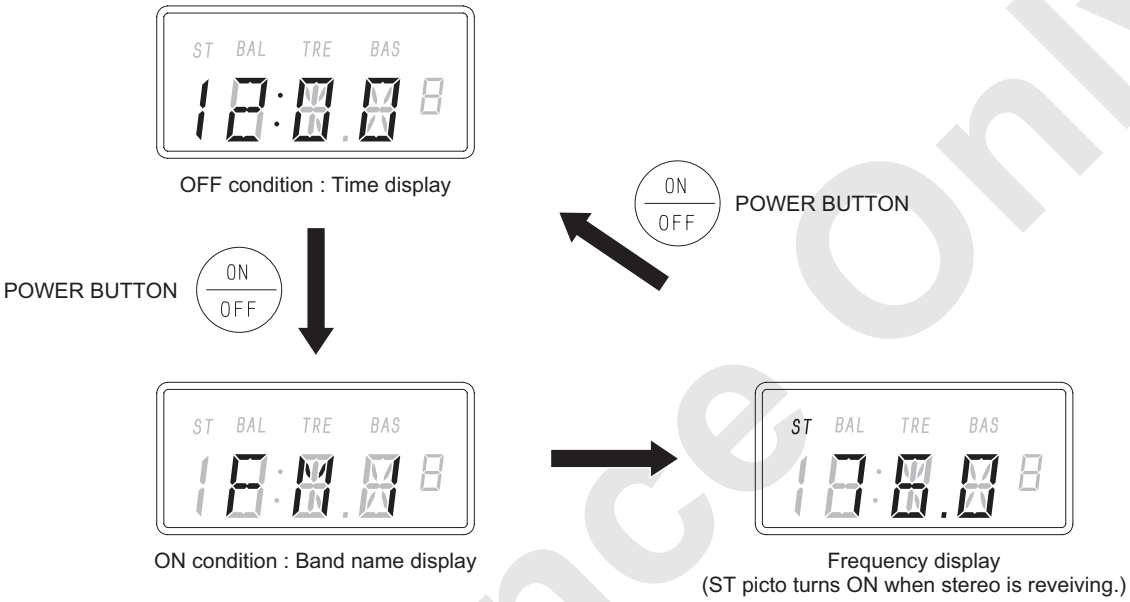

   Under this condition, by pressing “DISPLAY SELECT BUTTON” (frequency/time), frequency display and time display alternates.
   (When display is changed from time display → frequency display, band name is displayed for 1.0 seconds and then changed to frequency displayed.)

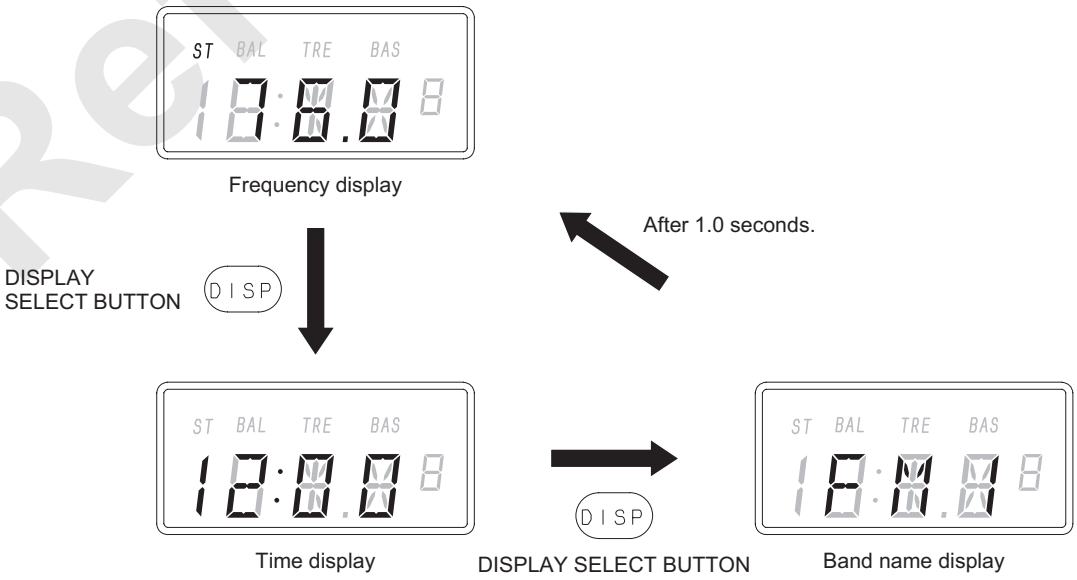

Reference Only

2. Band select

From normal condition by pressing “AM/FM SELECT BUTTON”, band is changed.
After band is selected, radio receives the last selected frequency of the band.
Selecting sequence is FM1 → FM2 → AM → FM1.

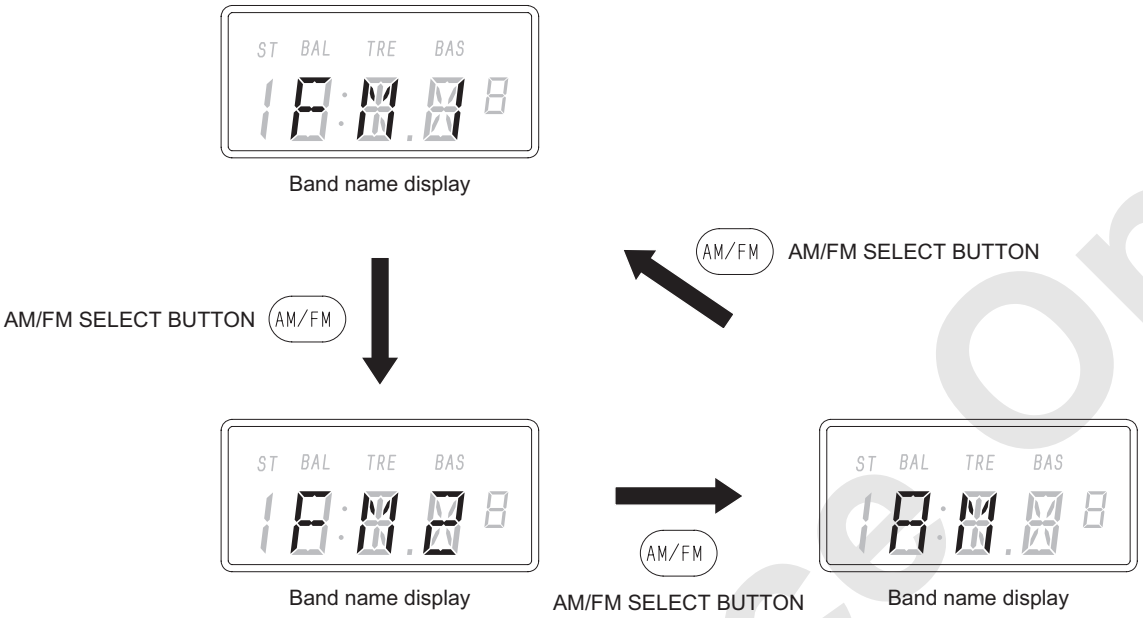

Reference Only

3. Frequency control (1 step up or 1 step down)

   From normal condition, by pressing up side of "TUNING BUTTON", frequency goes 1 step up. By pressing down side, frequency goes 1 step down.
   (At FM receiving, frequency is controlled by 0.2 MHz per 1 step and at AM receiving, by 10 kHz per 1 step.)

- **When selected band is FM1, FM2.**

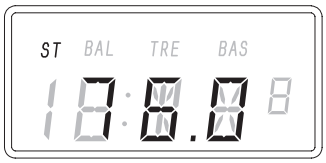

Frequency display
(ST picto turns ON when stereo is reveiving.)

TUNING BUTTON UP

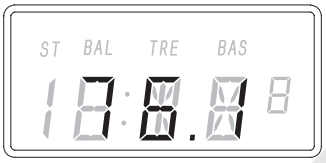

Frequency display
(ST picto turns OFF when non-stereo is reveiving.)

TUNING BUTTON DOWN

Frequency display
(ST picto turns OFF when non-stereo is reveiving.)

- **When selected band is AM.**

Frequency display
(ST picto always turns OFF when AM is receiving.)

TUNING BUTTON UP

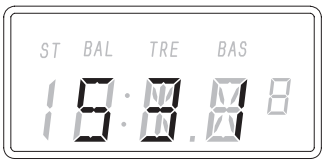

Frequency display
(ST picto always turns OFF when AM is receiving.)

TUNING BUTTON DOWN

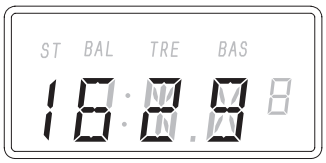

Frequency display
(ST picto always turns OFF when AM is receiving.)

Reference Only

4. Frequency control (auto seek)

From normal condition, by press-holding up side of “TUNING BUTTON”, frequency goes up by 1 step for continuously.
By press-holding down side, frequency goes down by 1 step for continuously.
By searching for good receiving frequency, auto seeking function stops and radio turns to receiving condition.

- **Example when selected band is FM1.**

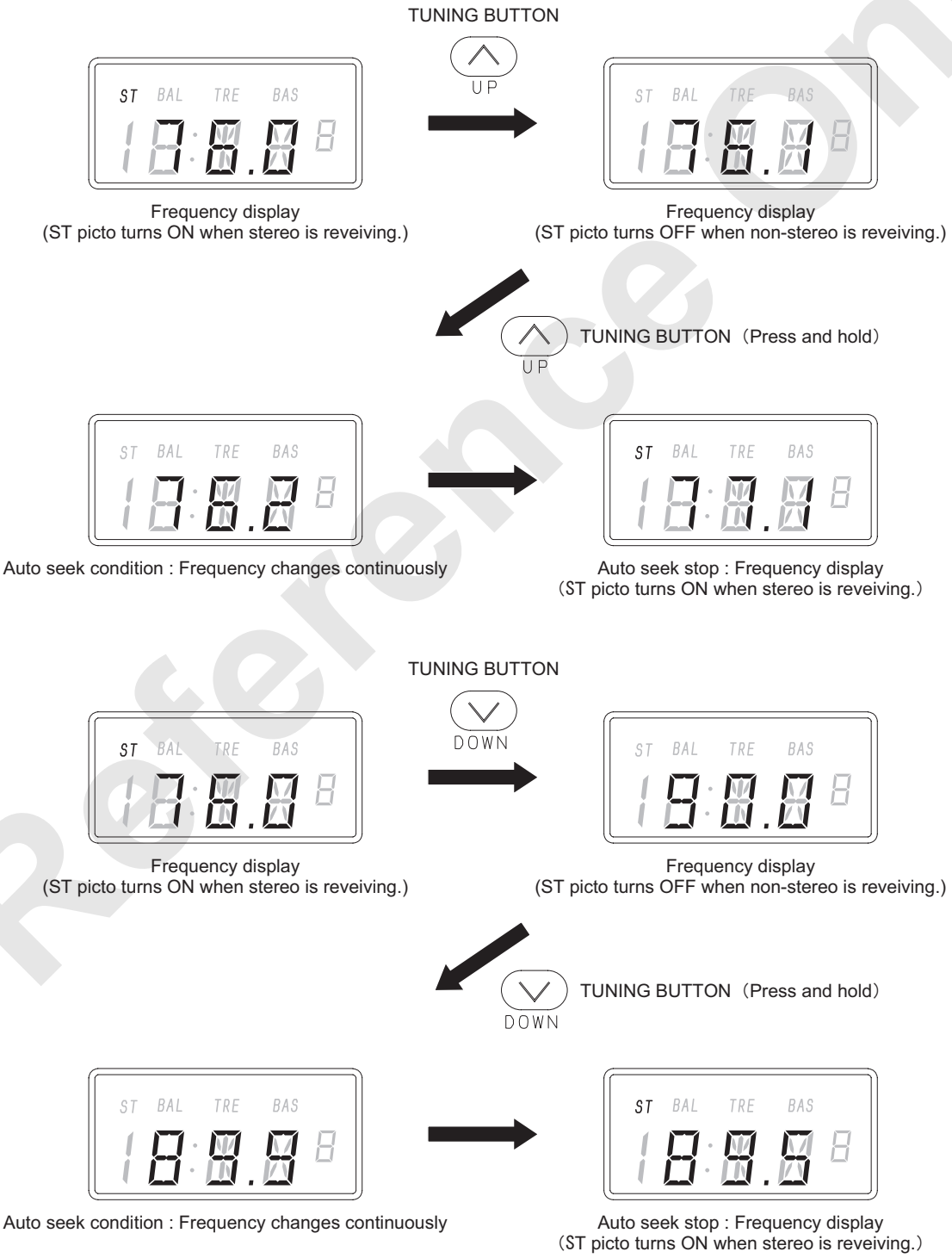

Reference Only

5. Frequency control (auto preset)

From normal condition, by press-holding “SOUND CONTROL BUTTON” good receiving frequency is automatically detected and memorized to the preset memory 1 to 6 (auto-preset function).
During auto preset, auto preset display as shown below is displayed (“A” display changes a certain interval) and this display ends with 2 beep sounds and preset 1 memorized frequency is received.

- **Example when selected band is FM1.**

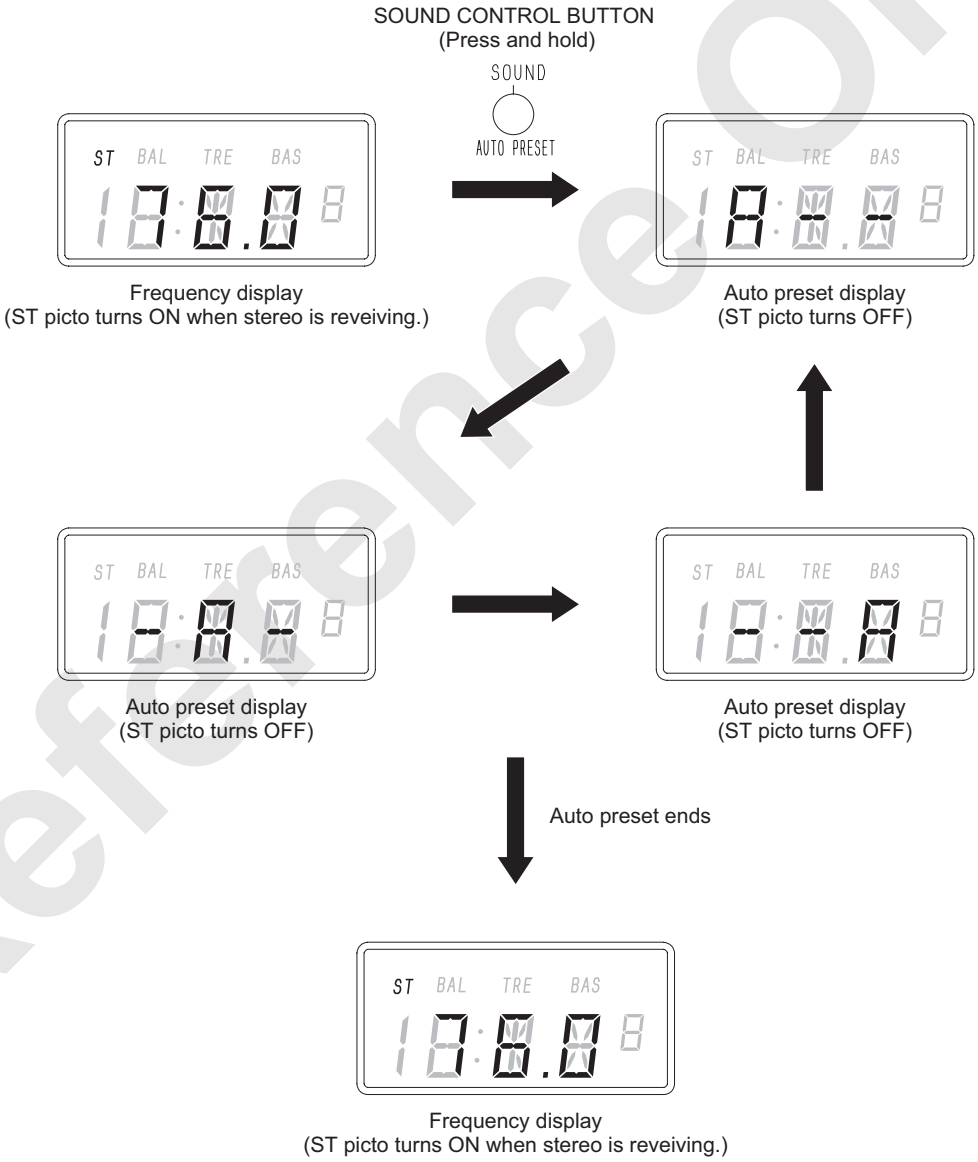

Reference Only

6. Preset call / Registration

From normal condition, by pressing “PRESET BUTTON (1 to 6)”, memorized frequency on preset No. is called and received.
During the radio reception, by press-holding the “PRESET BUTTON (1 to 6)” presently receiving frequency will be registered.

- **Example when selected band is FM1 (89.5 MHz is pre-memorized in preset No.1).**

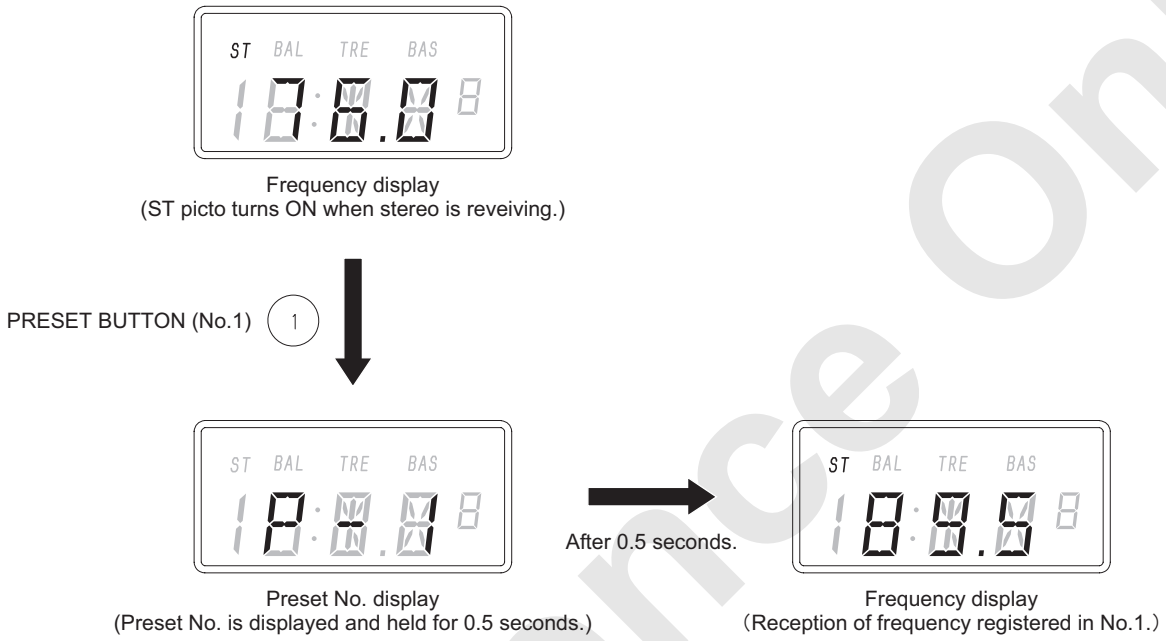

Reference Only

7. Time setting

When at OFF condition, press-holding a “DISPLAY SELECT BUTTON”, enter to time setting mode.
Indication of “Time” becomes blinking and adjust with the “TUNING BUTTON” and by pressing the “DISPLAY SELECT BUTTON”, shift the adjustment object of “time” → “minute” and the indication of “minute” becomes blinking then adjust with the tuning button and adjustment is complete, press the “DISPLAY SELECT BUTTON”.
The time setting mode will be released and display time indication.
(From this point, start counting a second internally.)

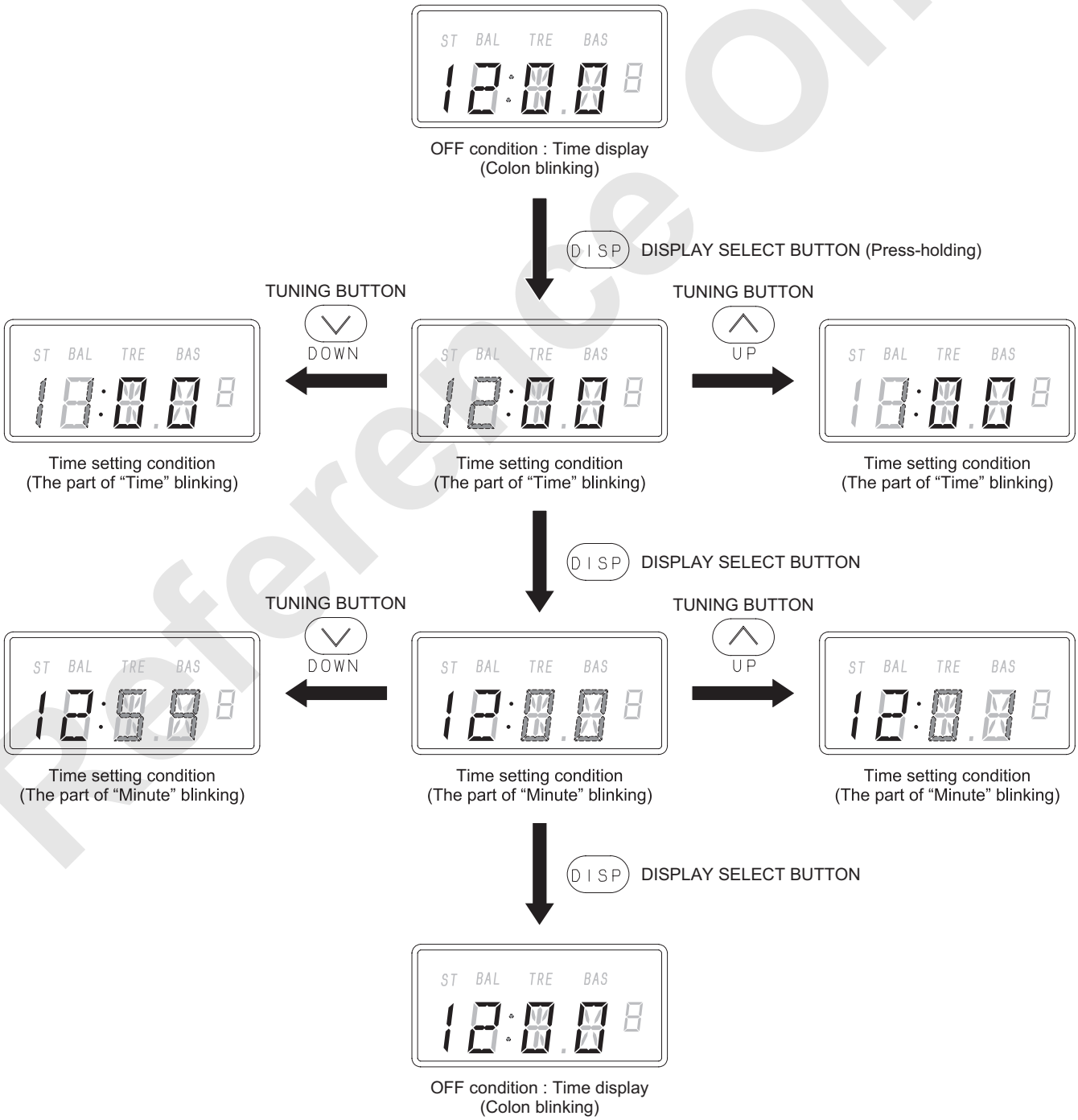

Reference Only

8. Area setting

There is a possibility that the radio reception may be poor due to the replacement of radio or the machine moved out to other territory.
When the radio reception is poor, confirm the present area setting and resetting of area selection if required.

(1) Confirmation method of setting area

With at OFF condition, press the DOWN side of “TUNING BUTTON” and the “PRESET BUTTON 4” at the same time, display the present set area code.
In case no area code is displayed even perform the above, contact with authorized Manitowoc distributor.

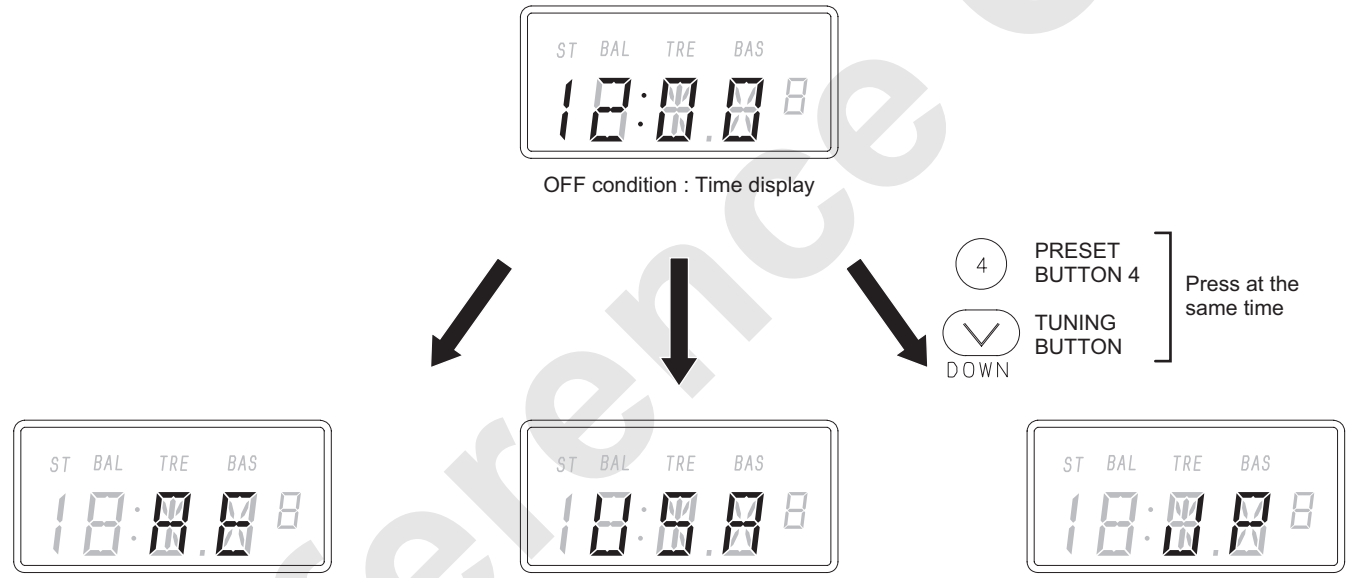

Reference Only

(2) Changing method of area setting

With at OFF condition, press-holding the “AM/FM SELECT BUTTON” and the + side of “VOLUME BUTTON” at the same time for 5 seconds or more, display the changing area setting mode.
Select the area with “TUNING BUTTON” and finalize and initialize the memory and reset when press the “SOUND CONTROL BUTTON”.
When not handling of any buttons for 10 seconds or when ACC power becomes ON, the area setting mode will be released.

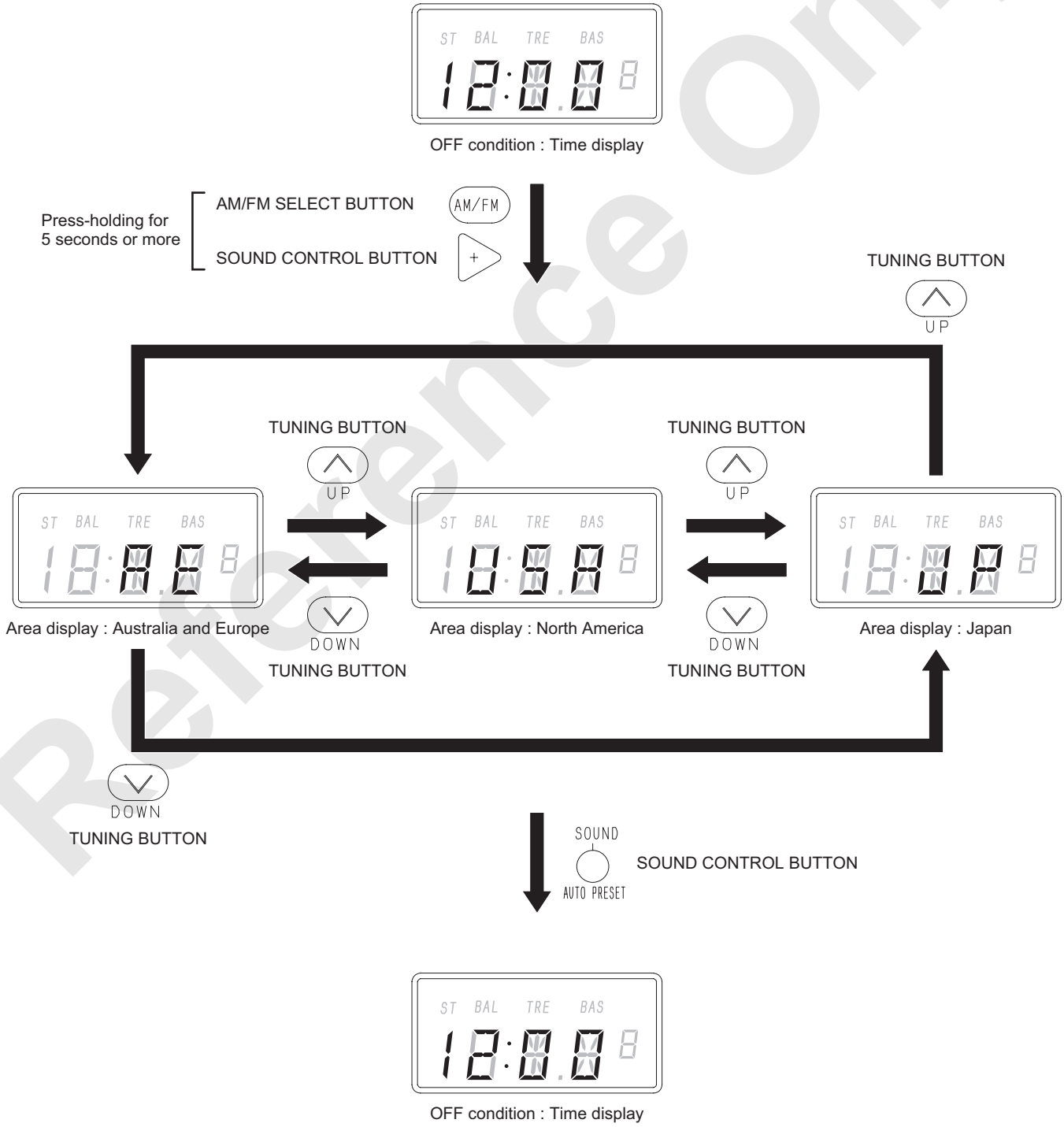

Reference Only

2.2.8 1WAY CALL (TRANSMITTER)

1. Configuration of 1way call

   The 1way call comprises the amplifier, microphone, and external speaker.

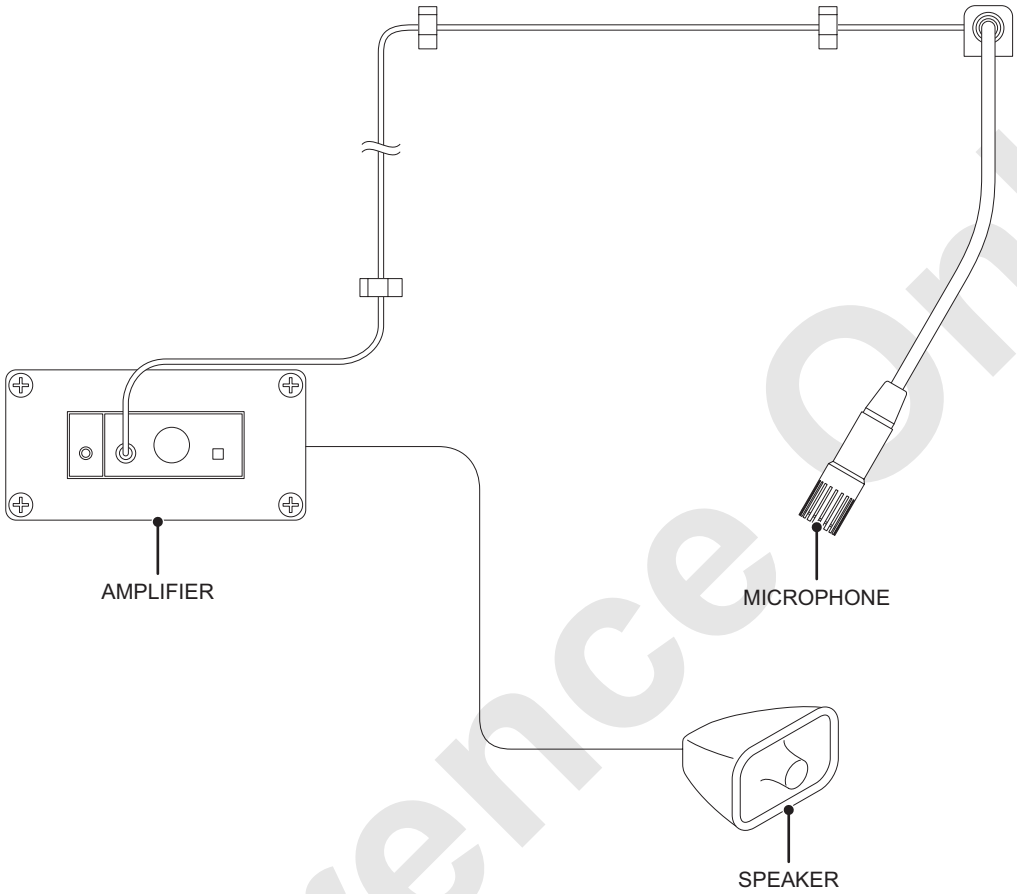

2. Operation instruction

(1) Set the power switch to the “ON” position.
(2) The operator’s voice can be transmitted through the outside speaker by talking to the microphone.
(3) The volume of the speaker can be adjusted with the volume adjuster.

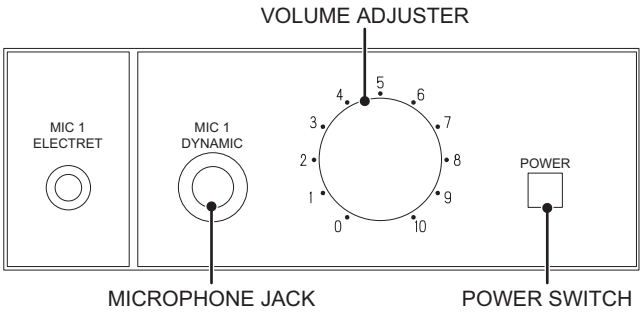

Reference Only

2.2.9 MONITORING CAMERA (OPTION)

It can check each drum wire rope winding condition or rear area of base machinery in the operator's cab.

The camera monitor can check the following location.

Hoist drum monitoring camera	Front drum
	Rear drum
	Third drum (option)
Boom drum monitoring camera	Boom hoist drum
Machine rear monitoring camera	Machine rear side

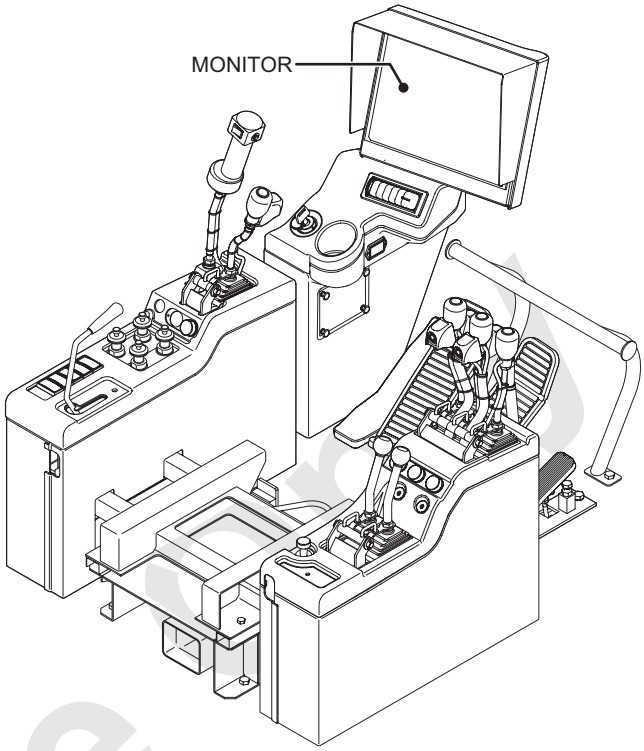

The monitor can be displayed by the selection of monitoring camera equipped at respective locations.

Hoist drum monitoring camera	Boom drum monitoring camera	Machine rear monitoring camera
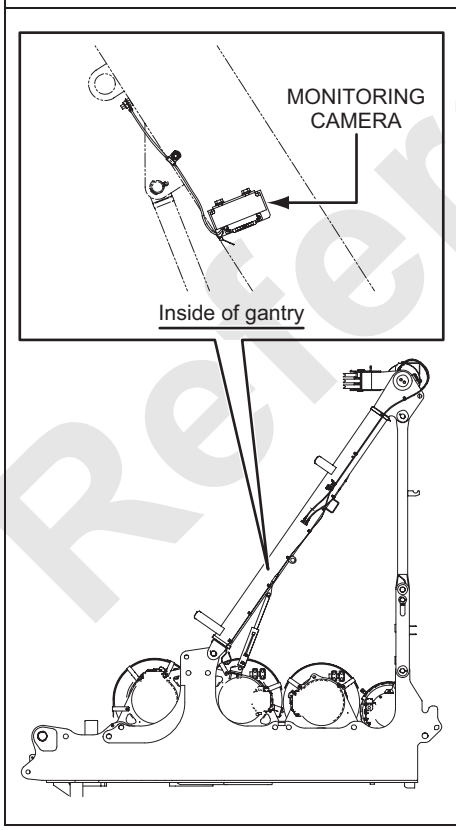	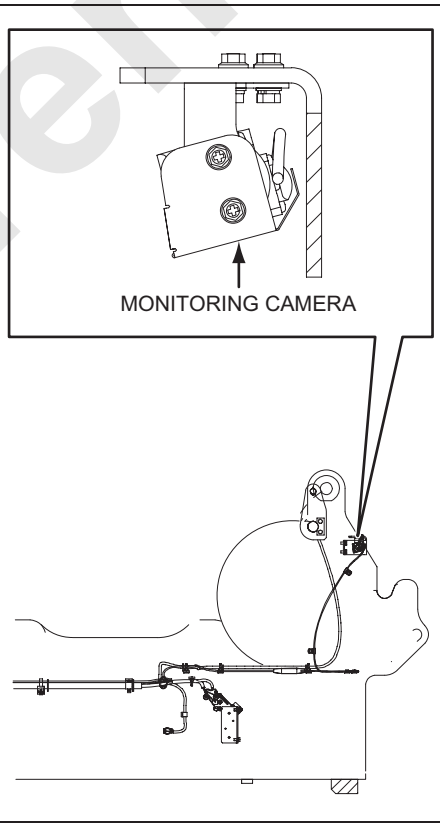	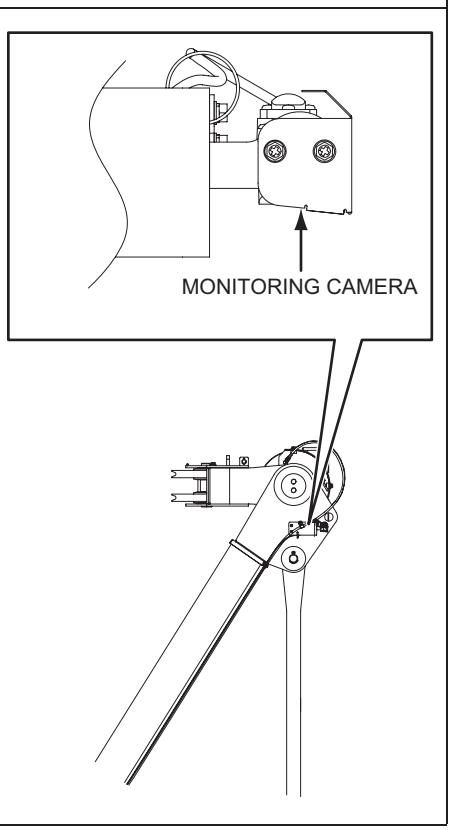

Reference only

1. Image indicating of monitor camera

   Push the (Camera select icon) in the monitor. Camera image is indicated on right lower of the monitor.

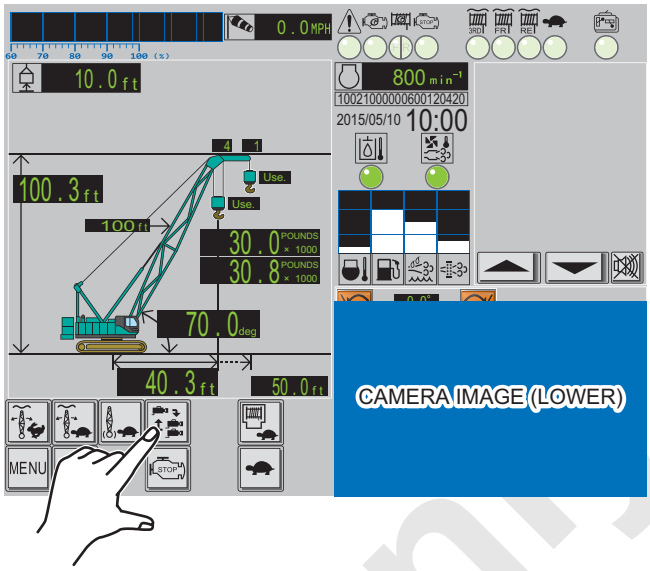

2. Selection of camera

   Maximum 4 cameras can be connected.
   When more than 2 cameras are connected, camera can be selected in order by touching the camera image indicating area.
   Select the required camera.

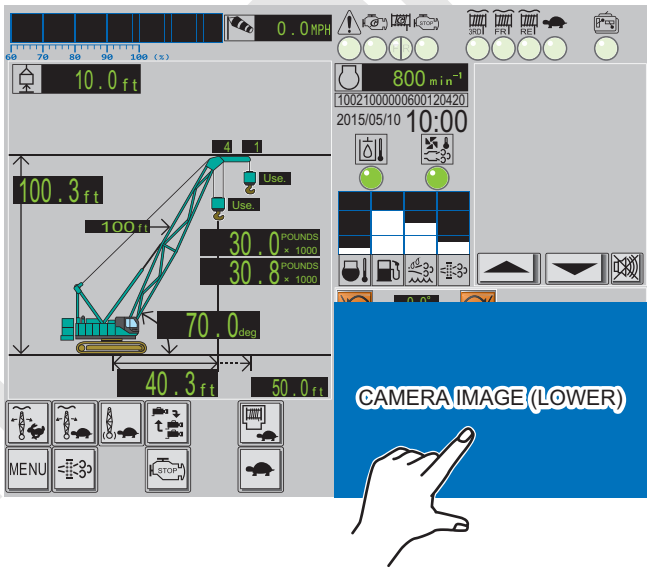

3. Change of camera indicating position

   When the machine inclination (option) or swing angle are indicated on right lower area of monitor, camera image can be indicated on right upper of the monitor.
   When the camera image is indicated on right lower, push (Camera select icon) can change the image indicating position to right upper.

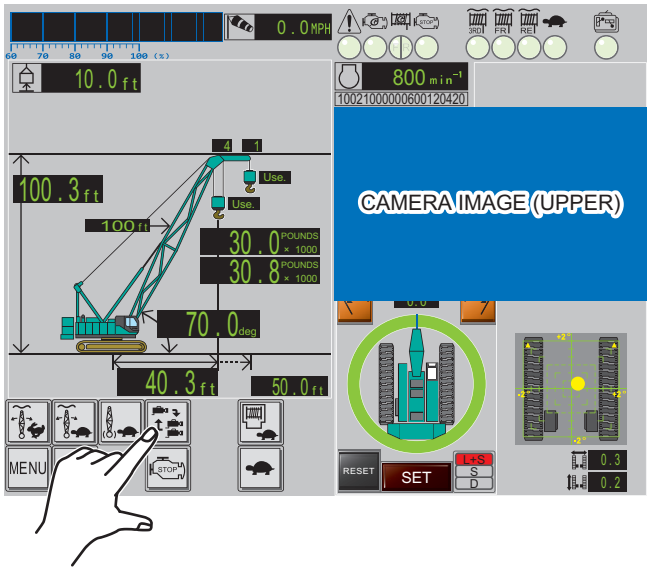

Reference only

4. Indication of plural images

In the condition of the image displayed on right upper, press (Camera select icon) one more time, the camera monitor images are displayed respectively on upper and lower.

Ex) In case of 4 cameras are equipped (camera 1 to 4) and displaying the camera 1 image on the right upper, every press to the lower part of camera image indication area, display the image of camera 2 → 3 → 4 → 2 in order.

* Not possible to display same camera image on upper and lower.

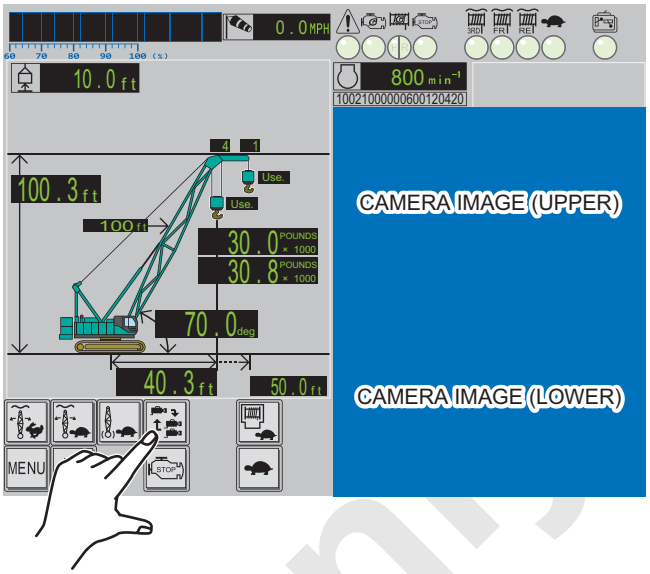

5. Warning indication

When the camera image is displaying on the upper part, warning buzzer sound is issued if warning occurs.
Change the screen manually and confirm contents of the warning and then take appropriate action.

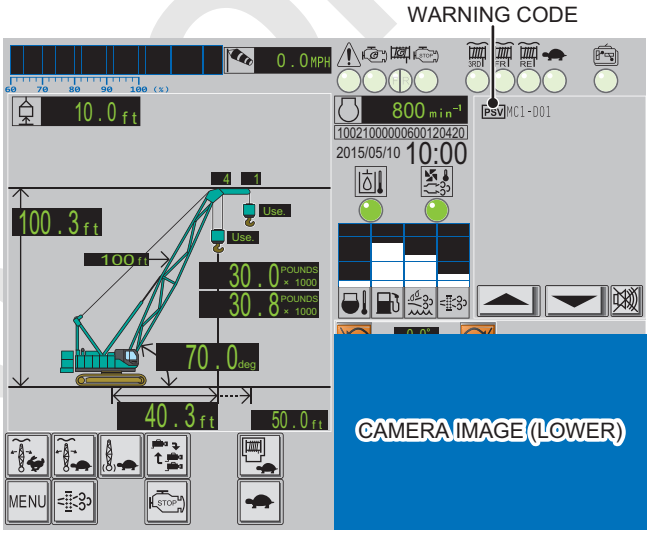

6. Switching of camera image zoom in or out

The camera image on both upper and lower parts can be zoomed in.
By every touching the right upper corner of screen, switching the image normal size from/to zoom in.
The zoom in display is to be enlarged center part of indication.

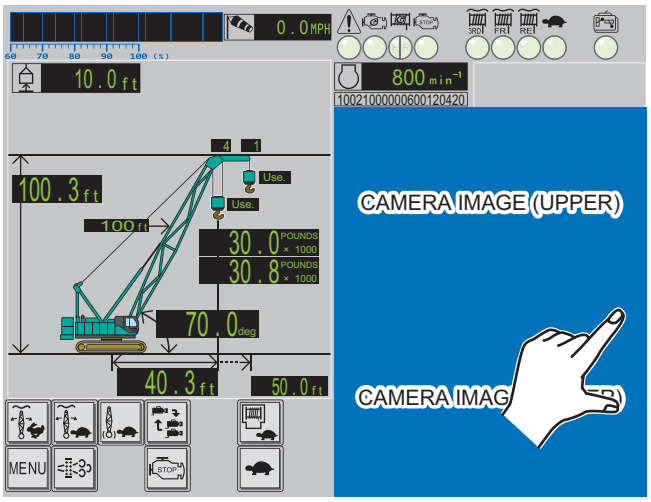

Note

When the display is zoom in, power off of base machine, switching the camera image display and switching the camera, the indication will be back to normal display.

Reference only

2.3 CRANE OPERATION

2.3.1 ADJUSTING THE OPERATOR'S SEAT

CAUTION

Adjust the operator seat to the position where the brake pedal can be firmly depressed.
During the seat adjustment, stop the engine and be sure not to move the control levers.
If the control lever moves, return it to the neutral position.

NAME OF EACH MOVABLE PORTION

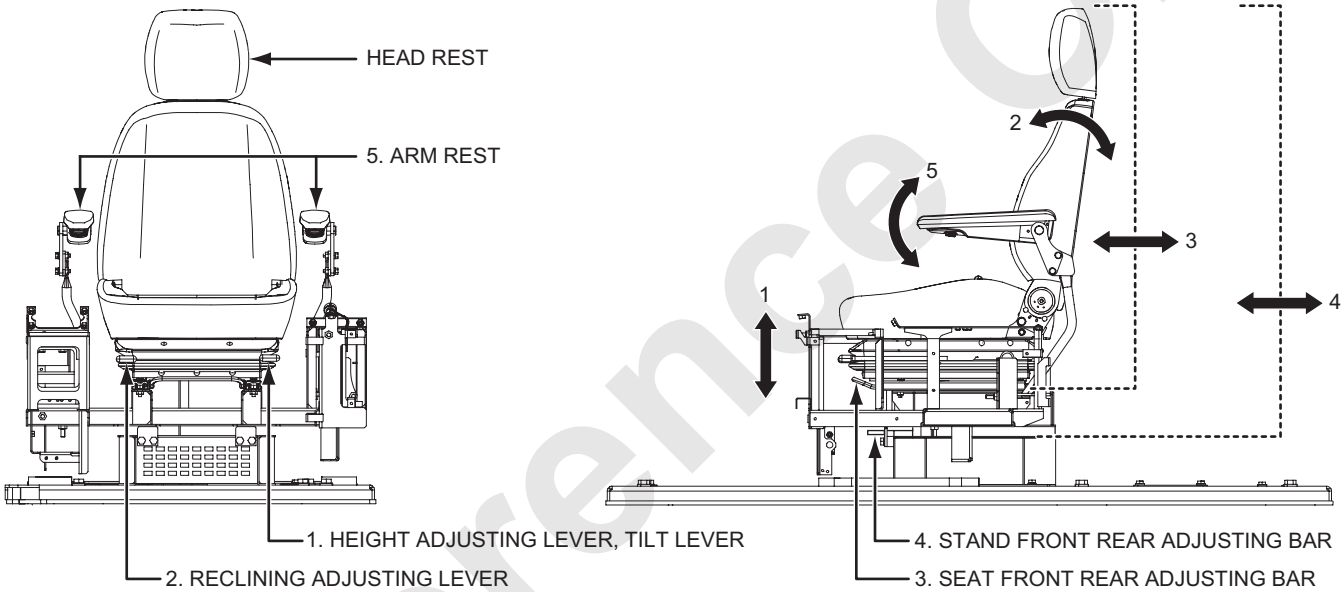

ADJUSTING OF EACH PORTION

1. HEIGHT ADJUST, TILT LEVER

(1) When the lever is pulled up, rear portion of the seat tilts up or down. (Tilt on 5 steps)
(2) When the lever is pushed down, front portion of seat tilt up or down. (Tilt on 5 steps)
(3) Seat height adjustment can be done by tilting of seat front and rear alternately.

2. RECLINING ADJUSTING LEVER

Adjust the seat back to the required angle by pulling up the lever.
After adjusting, release the lever to fix.

Reference Only

3. SEAT FRONT AND REAR ADJUSTING LEVER

Lift the lever up and move the seat by sliding back and forth.
After adjusting to the required position, release the handle and make sure that the seat is firmly locked.
(Adjusting range : 160 mm [6-5/16 in.])

4. STAND FRONT AND REAR ADJUSTING LEVER

Lift the lever up and move the whole seat and control stand sliding back and forth.
(Adjusting range : 60 mm [2-3/8 in.])

5. ARM REST

The arm rest can be lifted up toward rear.
In addition, by turning the lower control dial by hand, arm rest angle at normal position can be fine-adjusted up or down.

Reference Only

2.3.2 GETTING ON AND OFF FROM / TO OPERATOR'S CAB

Use the step on the lower part of cab deck to get on and off from/to operator's cab.

- The door secures at fully closed and fully opened position by the door catch.
- The door may slide open and close movement unexpectedly if the position in between due to the wind and ground inclination effect.
- The door should be fully open and secured by door catch when getting on and off to the operator's cab in order to prevent catch the body and/or hands in a door.
- When close the door, make sure the door be completely closed until hold by the door catch.

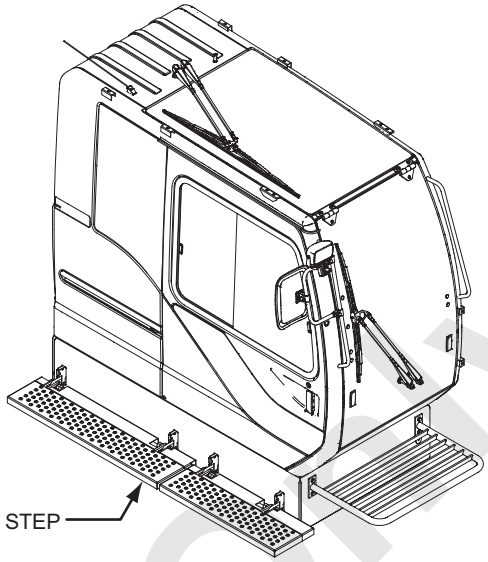

⚠ CAUTION

- **Take extra care not to have your hand caught during opening or closing the operator's cab door.**
  Failure to observe this precaution may result in a serious injury.
- **Take extra care not to fall from the step during getting on or off the operator's cab.**
  Failure to observe this precaution may result in a serious injury.
- **When leaving from the operator's cab, stop the engine and the function lock lever turn to lock position.**

Reference Only

2.3.3 STARTING AND STOPPING THE ENGINE

1. Starting the engine

(1) Before starting the engine, set the control levers and switches as follows.

(A) Front, rear, third (option) and boom drum control lever Swing, travel control lever	Neutral position
(B) Function lock lever	Lock position
(C) Swing brake switch	Engage side
(D) Front, rear, third (option) and boom drum lock knob	Lock position
(E) Front, rear drum brake pedal	Pedal lock position (pressing)
(F) Release switch master key	Lock side
(G) Free fall lock master key	Lock side

WARNING

Position all control levers to the neutral and check safety around the machine before starting the engine.
Even if each control levers are not in neutral position, the engine can start.
However each motion can't work without positioning the control lever to neutral once.

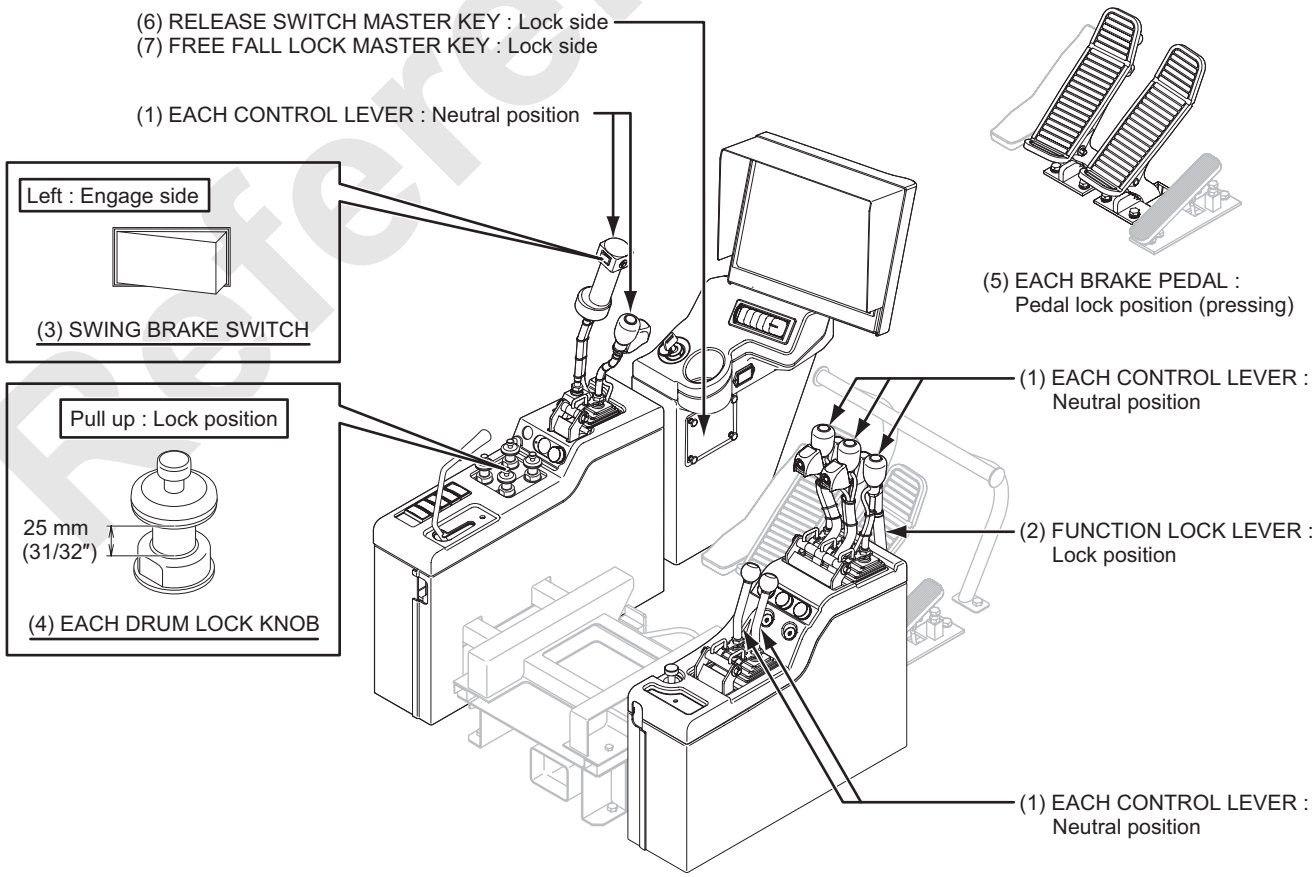

Reference Only

WARNING

Sound the signal horn to warn the surrounding personnel before starting the engine.
Failure to observe this precaution may result in a serious injury or loss of life.

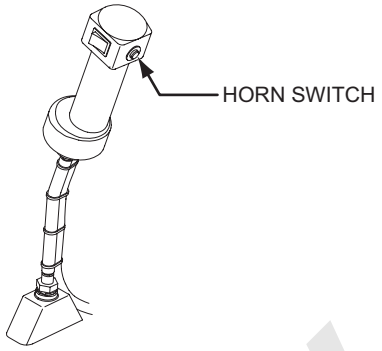

SWING CONTROL LEVER

(2) Confirm that the engine emergency stop switch is release position.

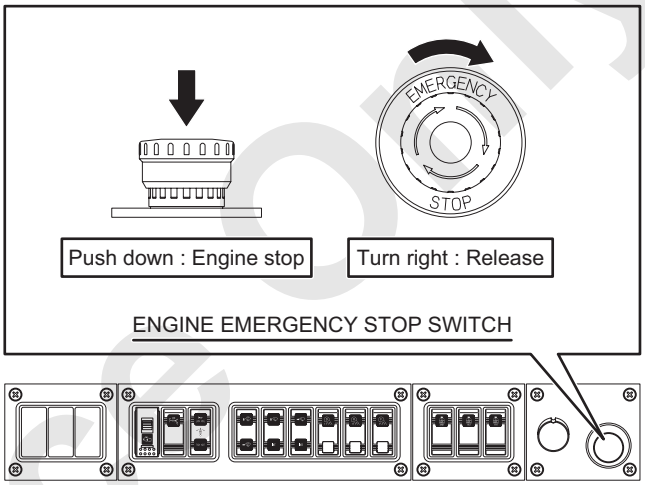

ENGINE EMERGENCY STOP SWITCH

LEFT SIDE SWITCH PANEL

(3) Turn the key switch 2 steps to the right (ON position).

OFF	Engine shut off position (Key insert / Take out position)
ACC	Accessory ON position
ON	Engine run position
START	Engine start position

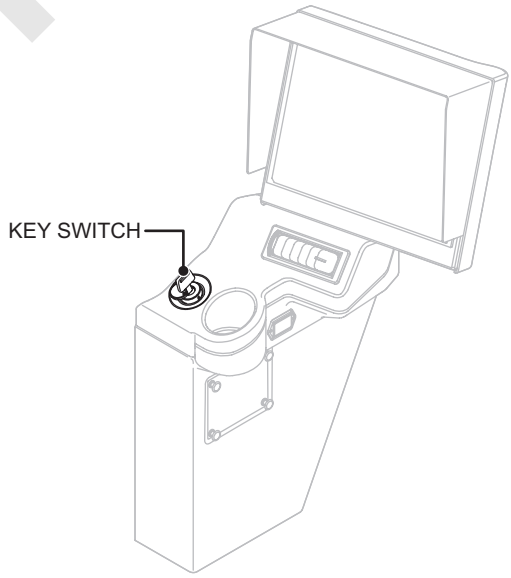

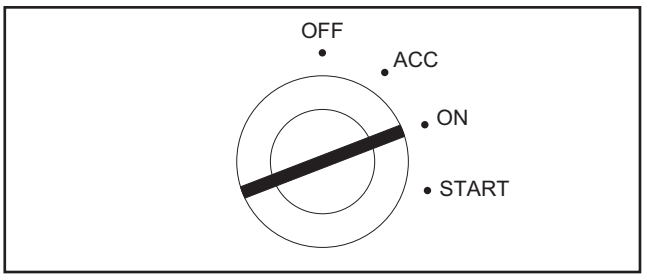

Reference Only

(4) By turning the key switch one step more to the right (START position), the engine starts.
After the engine starts, immediately release the key.
The key returns to the ON position automatically.

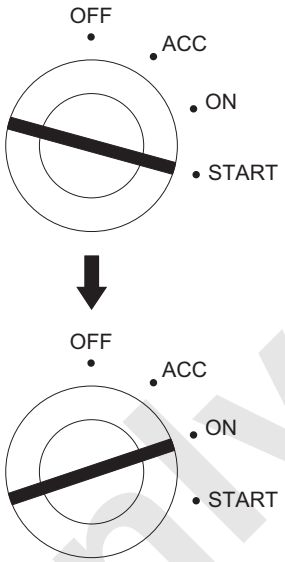

⚠ CAUTION

Do not allow the starter to run more than 15 seconds continuously.
If the engine does not start within 15 seconds, release the key and wait for more than 20 seconds, then start the engine again.

(5) After the engine starts, immediately check the monitor for abnormality.
If there is any abnormality, stop the engine immediately and seek for the cause.

(6) To adjust the engine speed, use the accelerator grip.
If the engine speed adjustment becomes impossible by the accel grip due to accelerator failure, use the auxiliary accel switch.

* This switch is equipped with the slide lock.
This switch can be operated only when the slide lock is slid to upper side.

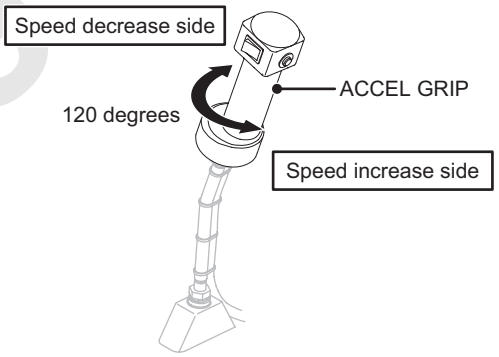

SWING CONTROL LEVER

⚠ CAUTION

Do not use the auxiliary accelerator switch when the accelerator grip is normal.
If in case of using the auxiliary accelerator switch while the accelerator grip is in normal condition, the engine speed control by the grip can't be made.

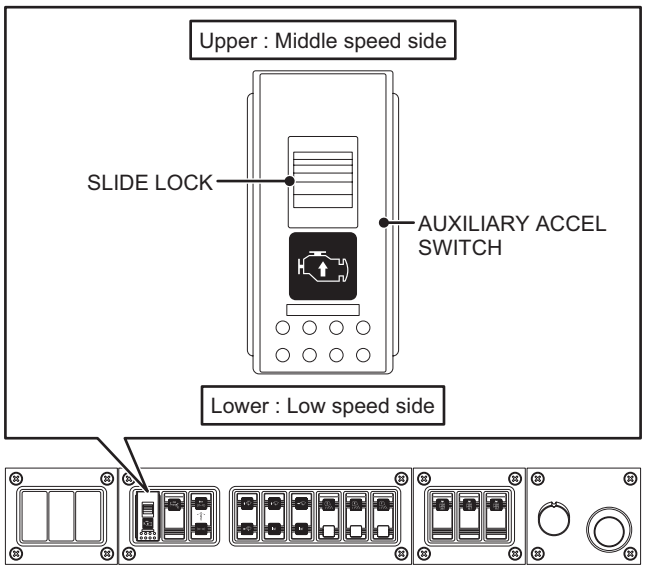

LEFT SIDE SWITCH PANEL

Reference Only

2. Engine starting assist at cold

The preheating function will start automatically when the key turns to ON position at the cooling water temperature is low (approximate 10 °C [50 °F] or less).
Indicate MC1-W01 in the monitor while preheating and the buzzer issues sound upon completion of preheating (approximate 5 seconds after) then the indication will be disappeared.
The engine starting would be easier with the engine key turns to start position right after the preheating is completed.
In addition to the above, the starting efficiency will increase when the engine starting with the acceleration grip turns more than 60% of its rotation which is enters into the cold starting mode.
At this time, the engine speed rise up to approx. 1,500 min^{-1} and this is to avoid the engine stalling and is not failure.

3. Engine warming up (At the engine starting)

(1) At normal ambient temperature, run the engine to modulate speed 1,000 min^{-1} or less for 5 to 10 minutes without load.
(2) At cold ambient temperature, run the engine to modulate speed 1,000 min^{-1} or less for 10 to 20 minutes without load.

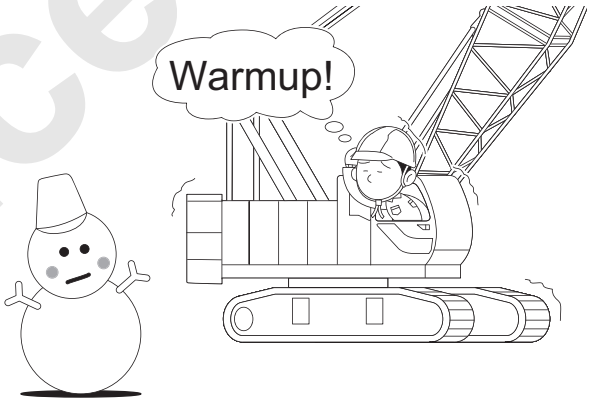

CAUTION

If the crane is operated without warming up the engine, the engine and the hydraulic components will be worn out earlier than usual or will be damaged.

Note

Depending on the machine operating condition or low atmosphere temperature due to the cold region or in winter, there is a case of auto regeneration may not be started or completed.
This is not the failure but perform the soot burning (regeneration) manually.

Reference Only

4. Shutting off the engine

(1) Before stopping the engine, set the control levers and switches as follows :

(A) Front, rear, third (option) and boom drum control lever Swing, travel control lever	Neutral position
(B) Function lock lever	Lock position
(C) Swing brake switch	Engage side
(D) Front, rear, third (option) and boom drum lock knob	Lock position
(E) Front, rear drum brake pedal	Pedal lock position (pressing)

(2) Allow the engine to run at low speed for approx. 5 minutes with no load before shutting off the engine.

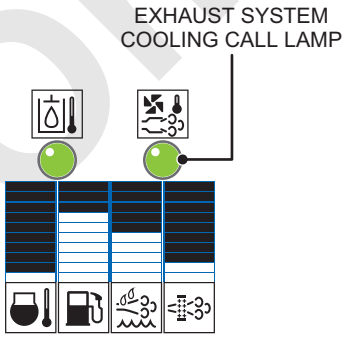

CAUTION

Do not stop the engine when the exhaust system cooling call lamp turns yellow.
Absolutely perform the cool down (keep the engine running at low revolution with no load) and must be stop the engine when the exhaust system cooling call lamp turns green.
Stop the engine with exhaust system temperature is high condition leads to adverse effect to the parts life of the emission control device and also if the related parts of emission control device defects, the engine output will be limited step by step.
As to the output limitation, refer to the article "2.3.4 EMISSION CONTROL DEVICE" for the detail.

(3) Turn the key switch to the OFF position.
After the engine is stopped, the power will be cut after awhile.
During this period, message will be indicated on the monitor urging to engage the drum lock.
If the emergency solenoid becomes actuated, the power will be cut after about 90 seconds.

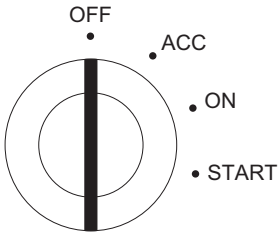

Reference Only

2.3.4 EMISSION CONTROL DEVICE

When the certain amount of the soot accumulated in the DPF, regeneration will function.
Burn the accumulated soot (regeneration) in the DPF by rise the exhaust temperature.
There are two modes of burning (regeneration) the soot which are an automatic regeneration mode and a manual.

Mode	Contents	Soot accumulation bar gauge
Refresh mode	Since the non-combusted fuel and the film which deteriorates the catalyst are accumulated in the emission control device when low idling or light load work continues for long time, therefore, rise the exhaust gas temperature and automatic refreshing occurs. (This is not regeneration)	0 to 8
SCR refresh mode	Since the non-combusted fuel and the film which deteriorates the catalyst are accumulated in the SCR catalyst when light load work continues for long time, therefore, rise the exhaust gas temperature and automatic refreshing occurs. (This is not regeneration)	0 to 8
Auto-regeneration mode	Burning (Regeneration) the soot occurs automatically. The lever control is possible even during automatic regeneration.	3 to 4
Manual regeneration mode	Burning (Regeneration) the soot occurs manually. The lever control is not possible during manual regeneration processing.	5 to 8

⚠ CAUTION

When the soot accumulation gauge icon starts blinking gray and yellow automatically, the load valve is working to rise the exhaust system temperature.
The blinking occurs when the refresh mode or the auto regeneration mode is on.
In such case, avoid stopping the engine and or cancelation of load valve working as much as possible.
Once the load valve is stopped, fuel so far used to rise the exhaust temperature becomes wasted and parts deterioration may be resulted.

⚠ CAUTION

Under the G engine mode, when start the manual or auto regeneration the mode is to be changed to power mode automatically and is not abnormal.
When complete respective processing, return to G engine mode.

Reference Only

REFRESH MODE

When low idling, light load work or low exhaust temperature condition continue for one hour, refresh start for emission control device.
Refresh mode functions regardless of the soot accumulation bar gauge.

1. Sequence

(1) When starting the refresh mode, automatically the engine speed increase gradually up to 1,000 min^{-1} and start function of the load valve.

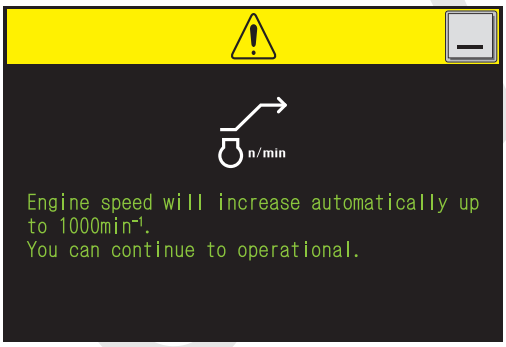

(2) Rise the exhaust gas temperature and perform the refresh of emission control device.
(Approx. 10 to 15 minutes)

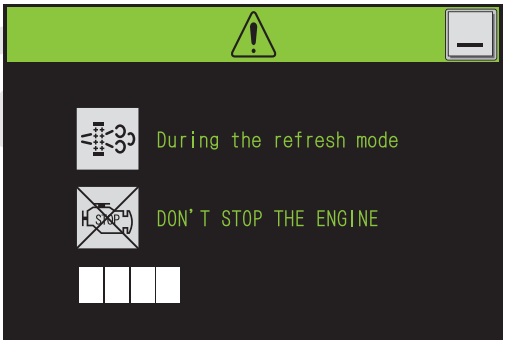

(3) When the refresh of emission control device is completed, automatically the engine speed decrease to 800 min^{-1} and returns to normal operation.

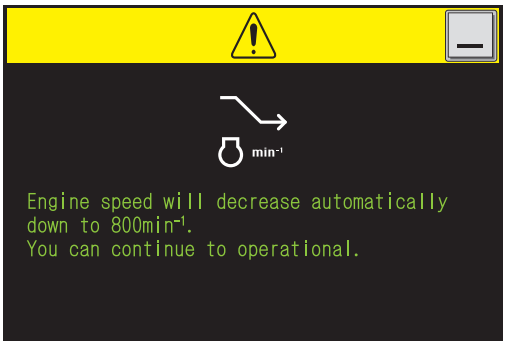

Note

- **Under the refresh mode, if the engine speed exceed 1,100 min^{-1}, refresh mode will be cancelled automatically and keep the cancel condition until the key switch turns OFF.**
- **The key switch turns OFF once, the cancel condition to be released.**

Reference Only

2. Cancelation of refresh mode

   Due to some reasons of crane work, to avoid entering the refresh mode, press DPF regeneration cancel icon in the monitor.

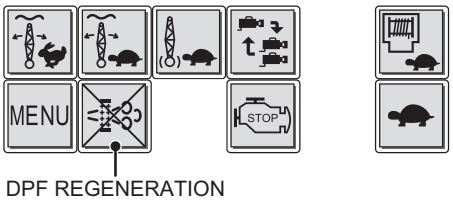

DPF REGENERATION CANCEL ICON

Note

- **When press the DPF regeneration cancel icon, refresh mode and auto-regeneration will becomes cancel condition and refresh and auto regeneration being unable to do while in this period.**
- **The key switch turns OFF once, the cancel condition to be released.**

Note

- **If cancel the refreshing, there is a possibility of white smoke poured out of which contents unburned fuel.**
- **When accumulate the unburned fuel may cause in deterioration of the emission control system.**
- **The refresh mode is differ from the auto regeneration, therefore the soot accumulation gauge level will not be reduced.**

Reference Only

AUTOMATIC REGENERATION MODE (CRANE OPERATION POSSIBLE)

When the soot accumulation bar gauge reaches to the 3 blocks, automatically start the soot burning (regeneration).
Under the auto-regeneration, the crane can be able to operate.

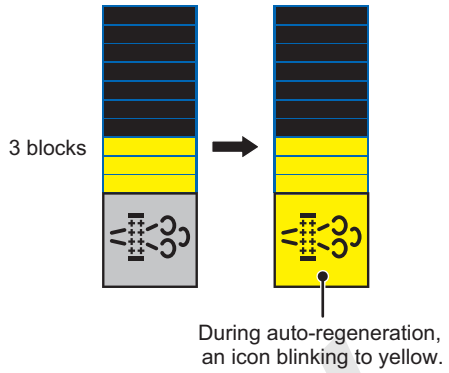

Note

There is a possibility of not starting/completion of auto regeneration when the ambient temperature is low at cold region or in winter season.
And also there is a case of not starting/completion of auto regeneration depend on the condition of operation.
Unable to do the starting/completion, this is not a fault, refer to the "MANUAL REGENERATION MODE" describe later, perform burning (regeneration) the soot manually.

⚠ CAUTION

Under the G engine mode, when start the manual or auto regeneration the mode is to be changed to power mode automatically and is not abnormal.
When complete respective processing, return to G engine mode.

1. Selection of automatic regeneration mode

   Depend on the situation, can be selected the control of the automatic regeneration from out of 3 controls.
   At shipping the machine from manufacture, the control 1 has been set.

(1) Press MENU menu icon in the monitor.

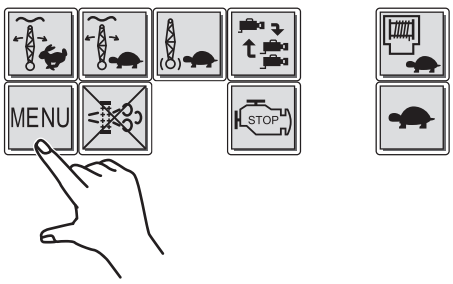

Reference Only

(2) From the displayed screen, press [ ] in the monitor.

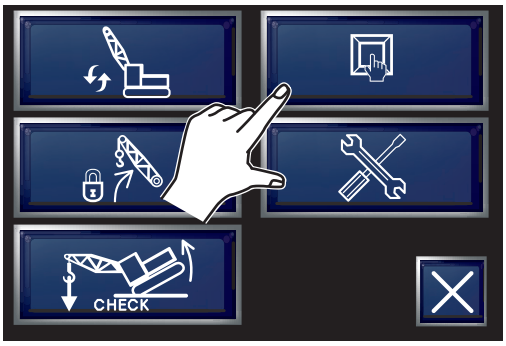

(3) Setting items are display, press [NEXT].

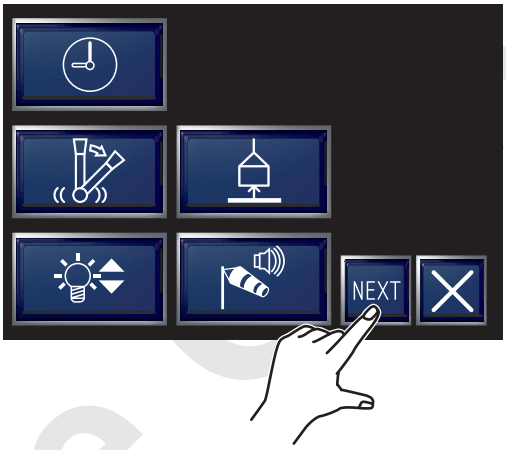

(4) Press [ ] and display the automatic regeneration select screen.

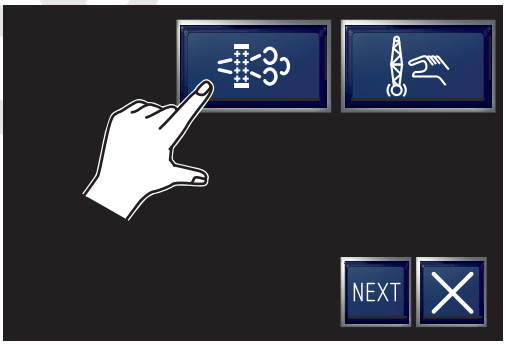

(5) Select one of the automatic regeneration controls from out of 3 icons.
These controls are selected the engine speed behavior and the function timing of load valve at the automatic regeneration.
(As to the details of each control. Refer to next page.)

* When use of camera select switch (option), select only either control 1 or 2.

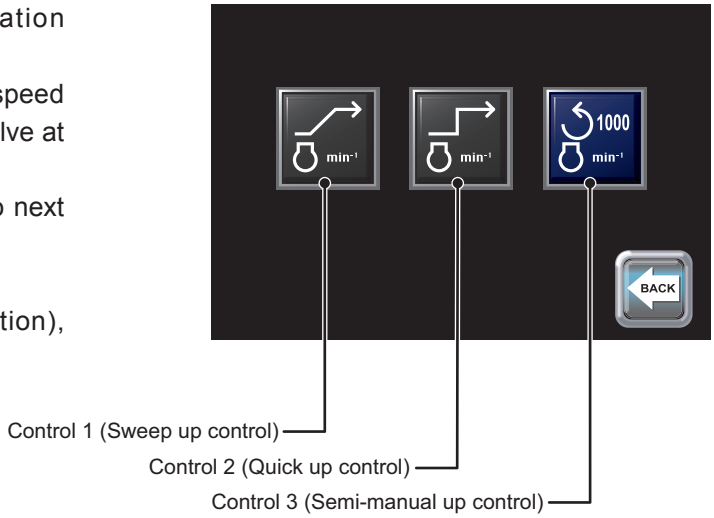

Reference Only

2. Details of each control

(1) Control 1 (Sweep up control)
This control is that the automatically increase the engine speed gradually and when the burning (regeneration) of soot is completed automatically the engine speed decrease gradually.

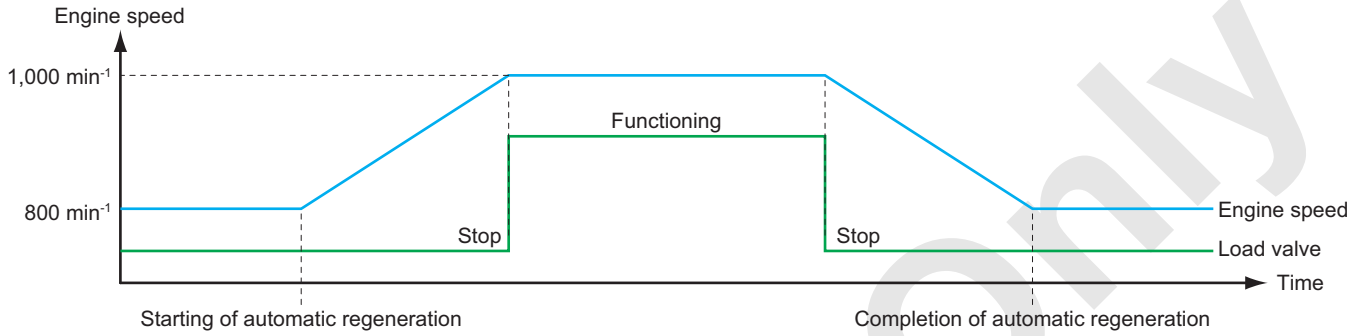

(A) When automatic regeneration is started, the starting icon will be displayed on the monitor, after the alarm sound is issued, increase the engine speed up to 1,000 min^{-1} gradually.
(B) Start function the load valve when the engine speed reaches 1,000 min^{-1}.

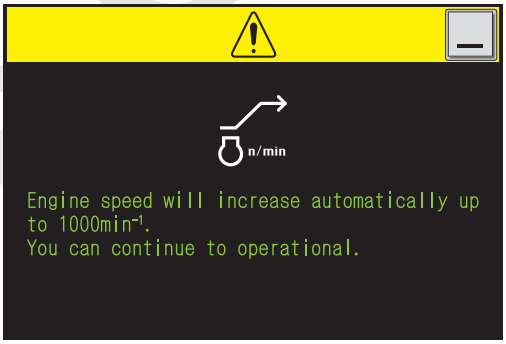

(C) Rise the exhaust temperature and perform the soot burning (regeneration) (Approx. 10 to 20 minutes)
(D) Under the automatic regeneration, display time bar gauge which shows the estimate time to completion.
Automatic regeneration screen can be switched either display / non display by minimize button.

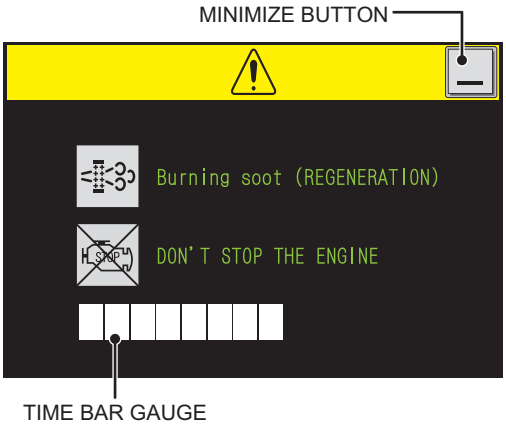

AUTOMATIC REGENERATION SCREEN

Reference Only

(E) When burning (regeneration) of soot is completed, display the completion message and after the alarm sound is issued, stop the function of load valve.

(F) Automatically the engine speed decrease to 800 min^{-1} and returns to normal operation.

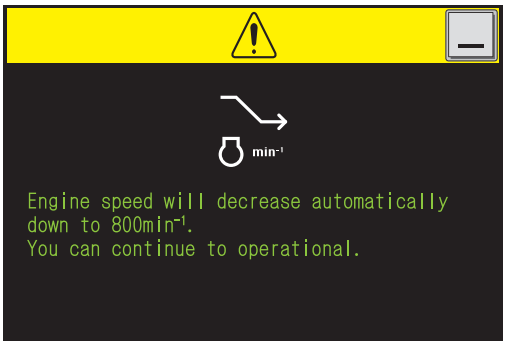

(G) After the automatic regeneration is completed, require the exhaust system cooling to decrease the exhaust temperature.

(H) The message will be displayed in the monitor, don't stop the engine until the exhaust system cooling call lamp turns to green color.

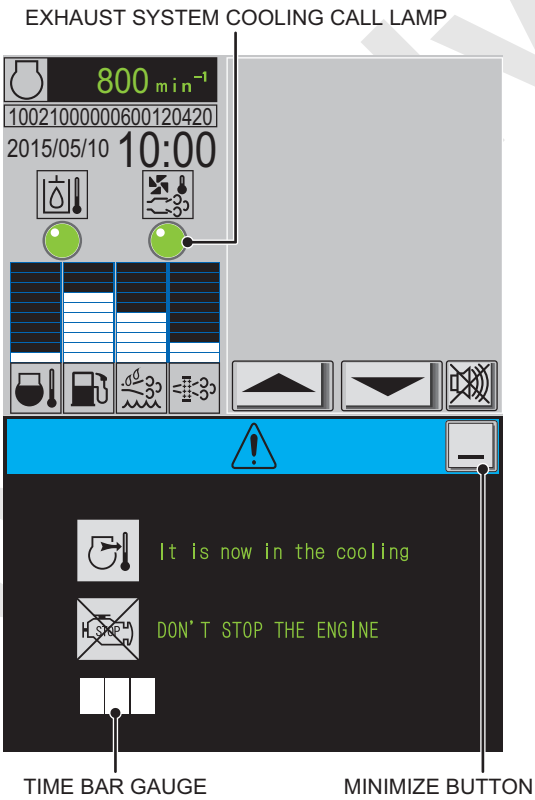

EXHAUST SYSTEM COOLING SCREEN

Reference only

(2) Control 2 (Quick up control)
This control is that the automatically increase the engine speed and while the burning (regeneration) of soot automatically the engine speed decrease.

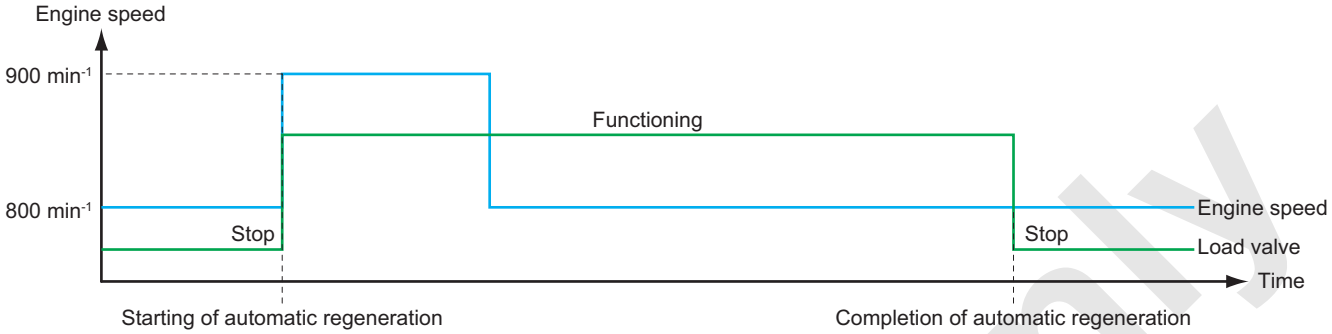

(A) When automatic regeneration is started, after the alarm sound is issued, increase the engine speed up to 900 min^{-1} quickly and start the load valve function.
(B) Rise the exhaust temperature and perform the soot burning (regeneration) (Approx. 10 to 20 minutes)
(C) Under the automatic regeneration, display time bar gauge which shows the estimate time to completion.
(D) When burning (regeneration) of soot is proceeding, after the alarm sound is issued, automatically the engine speed decrease to 800 min^{-1} quickly.
(E) The burning (regeneration) of soot is completed, stop the load valve function and returns to normal operation.

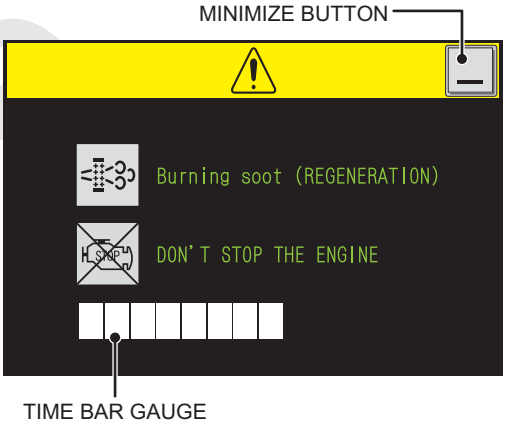

AUTOMATIC REGENERATION SCREEN

Reference Only

(F) After the automatic regeneration is completed, require the exhaust system cooling to decrease the exhaust temperature.

(G) The message will be displayed in the monitor, don't stop the engine until the exhaust system cooling call lamp turns to green color.

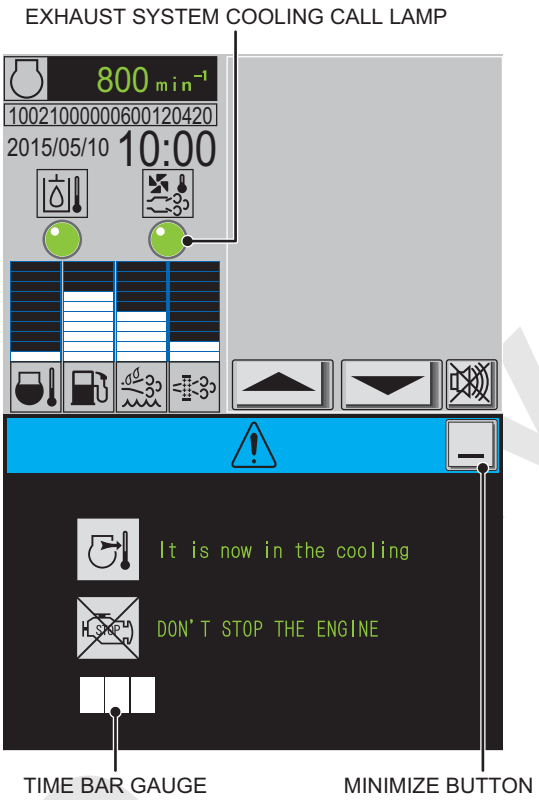

EXHAUST SYSTEM COOLING SCREEN

Reference only

(3) Control 3 (Semi-manual up control)
This control is that the manually increase the engine speed to 1,000 min^{-1} or more and perform the burning (regeneration) of soot.

* When use of camera select switch (option), select only either control 1 or 2.

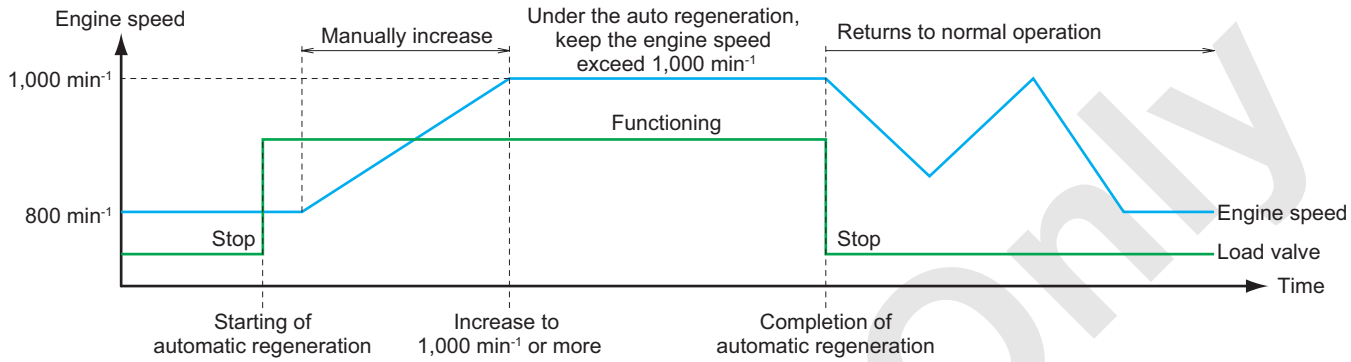

(A) When automatic regeneration is started, after the alarm sound is issued and start the load valve function.
(B) The request message will displayed, therefore increase the engine speed to 1,000 min^{-1} or more.

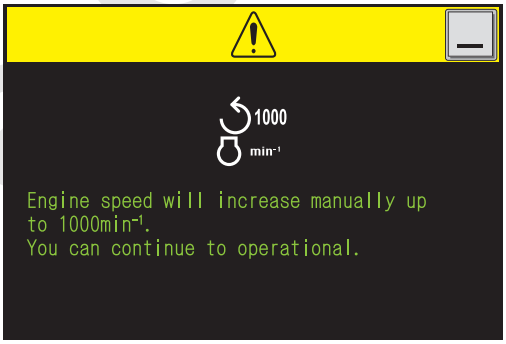

(C) Rise the exhaust temperature and perform the soot burning (regeneration) (Approx. 10 to 20 minutes).
(D) Under the automatic regeneration, display time bar gauge which shows the estimate time to completion.
Automatic regeneration screen can be switched either display / non display by minimize button.

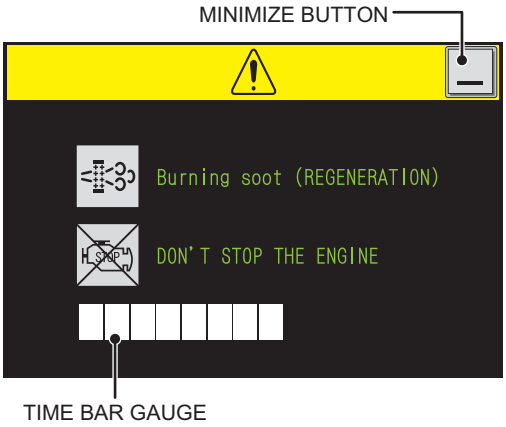

AUTOMATIC REGENERATION SCREEN

CAUTION

Under the auto regeneration, unless keep the engine speed exceed 1,000 min^{-1}, the soot burning (regeneration) may not be completed.

(E) When burning (regeneration) of soot is completed, after the alarm sound is issued, stop the function of load valve.
(F) Leave the acceleration as is position, returns to normal operation.

Reference Only

(G) After the automatic regeneration is completed, require the exhaust system cooling to decrease the exhaust temperature.

(H) The message will be displayed in the monitor, don't stop the engine until the exhaust system cooling call lamp turns to green color.

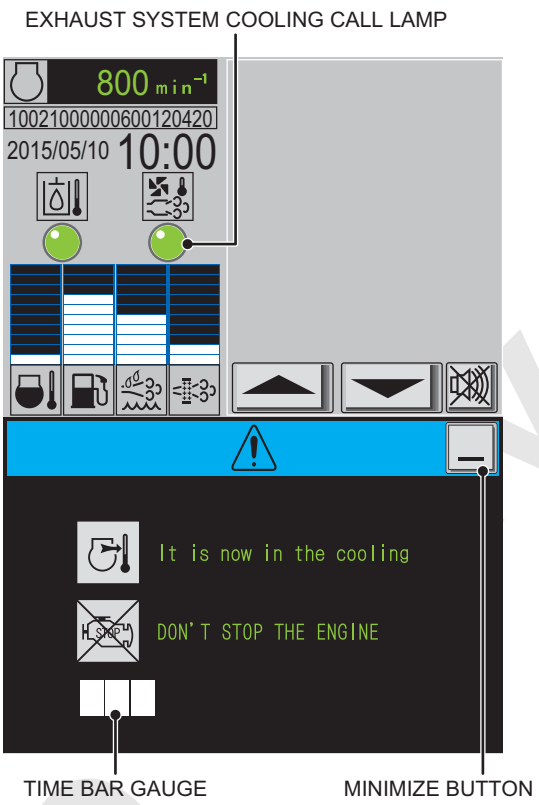

EXHAUST SYSTEM COOLING SCREEN

Reference only

3. Cancellation of auto regeneration

(1) Due to some reasons of crane work, to avoid entering the automatic regeneration mode, press DPF regeneration cancel icon in the monitor.

(2) After the automatic regeneration is cancelled, automatic regeneration will be restarted when the soot accumulation bar gauge is reached to the 4 blocks with the restating message is displayed on the monitor.

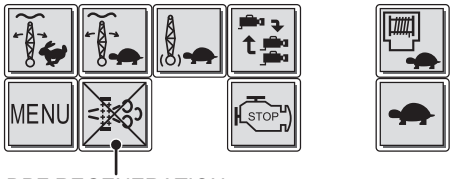

DPF REGENERATION CANCEL ICON

⚠ CAUTION

When cancelled, soot burning (regenerating) is not completed.
The soot accumulation gauge will not be reset.

Note

- **When press the DPF regeneration cancel icon, refresh mode and auto-regeneration will becomes cancel condition and refresh and auto regeneration being unable to do while in this period.**
- **The key switch turns OFF once, the cancel condition to be released.**

(3) After the automatic regeneration is cancelled, automatic regeneration can be restarted at arbitrary time with pressing the DPF regeneration start icon at the soot accumulation bar gauge is located in between 3 to 4 blocks.

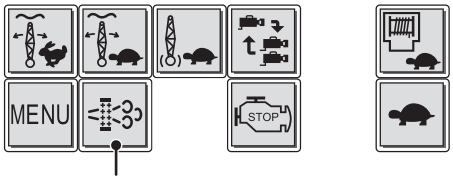

DPF REGENERATION START ICON

Reference Only

MANUAL REGENERATION MODE (CRANE OPERATION IMPOSSIBLE)

The soot accumulated further and accumulation bar gauge is reached to 5 blocks, the manual regeneration can become possible.
When the soot accumulation bar gauge is become the range of 5 to 8 blocks, pop up the manual regeneration request in the monitor.
Under the manual regeneration, the crane operation is not possible.

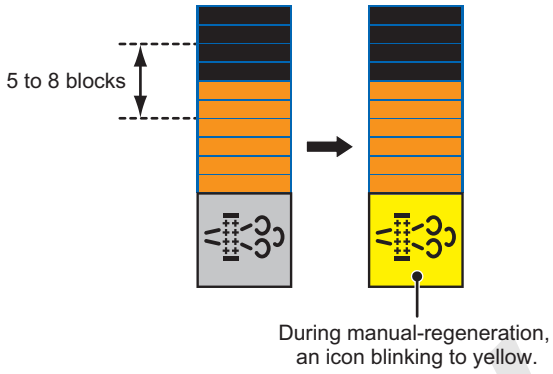

1. Sequence

(1) Press DPF starting icon at the engine idling and all the levers are in neutral position.
The manual regeneration icons are to be shown on 2 places (a) and (b).

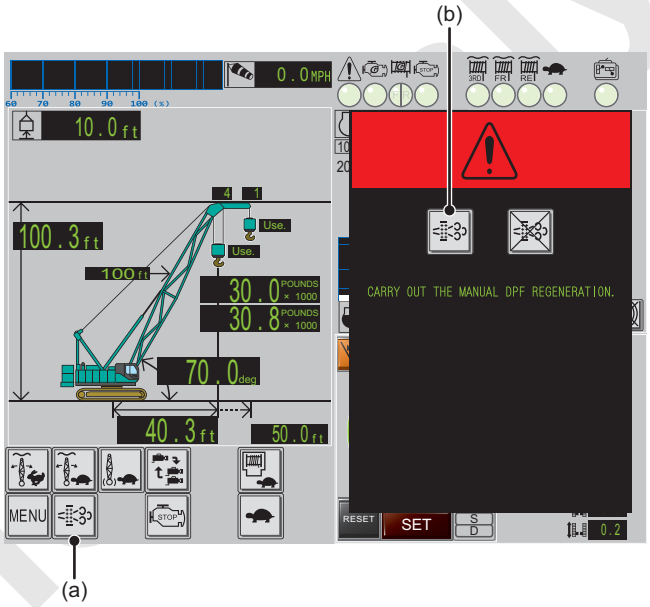

(2) When stating the manual regeneration, automatically the engine speed rise to 1,000 min^{-1} quickly and start the load valve function.
On the monitor screen, indicate the manual regeneration display and the estimate time to completion with the time bar gauge.
(3) Rise the exhaust temperature and perform the soot burning (regeneration) (Approx. 15 to 25 minutes).

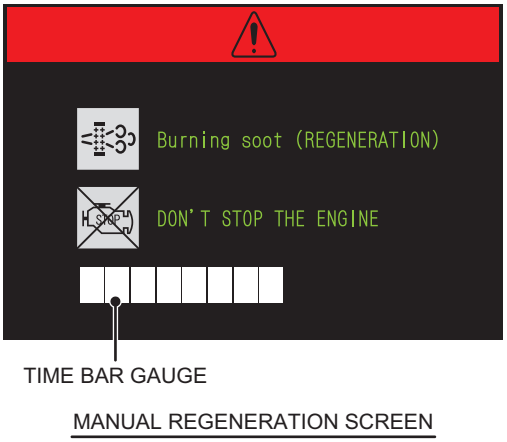

MANUAL REGENERATION SCREEN

Reference only

(4) When burning (regeneration) of soot is completed, automatically the engine speed decrease to 800 min^{-1} quickly and stop the load valve function then returns to normal operation.

(5) Depend on the operating condition, soot burning (regeneration) may be cancelled and soot accumulation bar gauge may not be reset.
In this case, regeneration request screen will not displayed until the soot accumulation bar gauge increase by one block however the regeneration can be possible to perform at any time.
Perform the manual regeneration as soon as become ready.

⚠ CAUTION

- **The burning of soot (regeneration) is rise the temperature in the emission control system to certain revel therefore the higher temperature at starting is faster to completion.**
  Thus, perform the regeneration is started under or just after the high load operation, is the high degrees of efficiency.
- **In case of the engine is cool, the burning (regeneration) of soot will be performed after warming up, thus, takes longer time to completion.**
  Therefore, if the manual regeneration performed under the high temperature situation of engine is higher efficiency.
  (Confirm the cooling water temperature is raised sufficiently if in case the ambient temperature is extreme low.)

⚠ CAUTION

Under the G engine mode, when start the manual or auto regeneration the mode is to be changed to power mode automatically and is not abnormal.
When complete respective processing, return to G engine mode.

Reference Only

2. Cancellation

Note

Cancellation of the manual regeneration request and manual regeneration has a limitation.
When the soot accumulation gauge reaches 8 bars, DPF regeneration cancel icon will not be indicated.
Manual regeneration should be performed as soon as possible.

CAUTION

When cancelled, soot burning (regenerating) is not completed.
The soot accumulation gauge will not be reset.

(1) Even indicate the manual regeneration request, the cancellation can be selected if in case of the process can't be performed immediately.

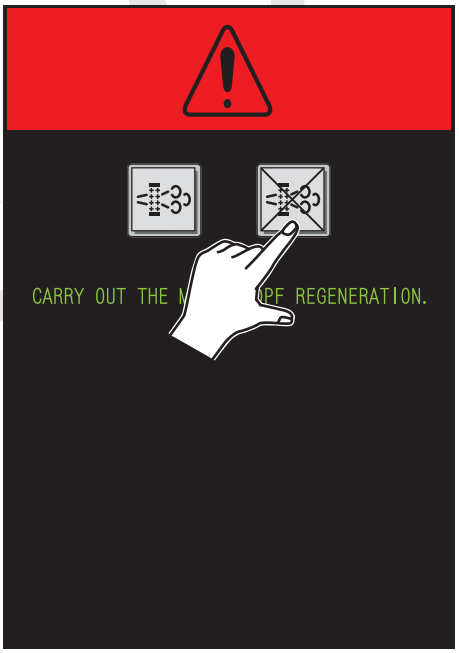

(2) Indicate the DPF regeneration cancel icon during the manual regeneration is processing.
(3) When the machine operation becomes necessary while manual regeneration is in progress by pressing the DPF regeneration cancel icon.

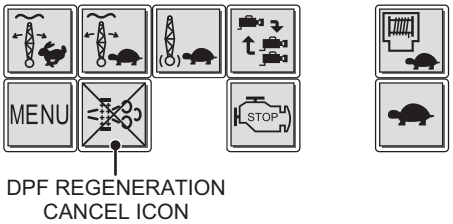

(4) After canceled, regeneration request will not be displayed until the bar gauge is become increase by one block.
However, the regeneration can be performed at any time.
Perform regeneration (burn the soot) whenever preparation is ready.

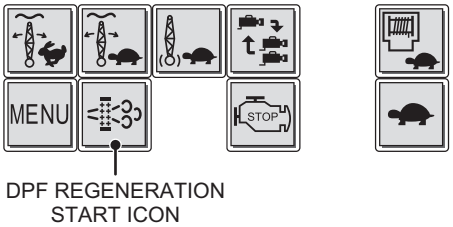

Reference Only

CAUTION

When no action taken for long time after the manual regeneration request is displayed and soot accumulation bar gauge reaches 9 blocks, the forced regeneration will be performed to prevent failure of emission control device.
Halt operation and wait until the regeneration is completed.

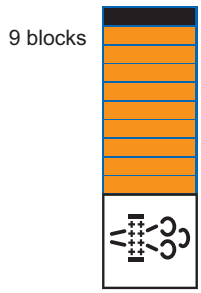

Orange

CAUTION

When the soot accumulation gauge reaches 10 blocks, the emission control device could malfunction and error would be indicated in the main monitor.
Contact the nearest Manitowoc service shop and request of replacing the emission control device and error reset.

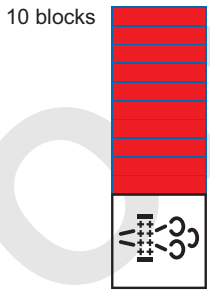

Red

CAUTION

Do not wash the engine area with high pressure water.
During engine running especially during the emission control device is under burning (regeneration) work, if the high pressure water hit the diesel throttle etc. water may enter into the diesel throttle and may cause malfunction of the system.

CAUTION

- **The burning (regeneration) of soot becomes unable to do when enter the engine output limitation situation due to inducement control.**
- **When enter the output limitation situation, stop the engine and recover normally as soon as possible.**
- **The details of inducement control, refer to the article "2.3.5 TIER4 FINAL INDUCEMENT CONTROL".**

Reference Only

2.3.5 TIER4 FINAL INDUCEMENT CONTROL

WHAT IS INDUCEMENT CONTROL

An inducement control is to be issued a warning display, alarming and decreasing machine output when the emission control is not functioned properly or possibility of malfunction.
And this control system urges to return to the normal condition.
The engine output decreases depending on the contents of occurrence and become difficult to operate as normal work.

The engine output will be limited by the inducement control when faced following conditions.

- DEF/AdBlue® level becomes lower.
- DEF/AdBlue® quality becomes deteriorated.
- Parts of SCR system failure.

The engine output varies depending on the respective conditions.

Reference Only

WHAT IS DEF/AdBlue®

Under the DEF/AdBlue® SCR system is use urea solution use as a medium to create ammonia of which is required to purify NOx.
DEF/AdBlue® is the created solution of 67.5% purified water and 32.5% urea.
When DEF/AdBlue® injected exhaust gas in the muffler, DEF/AdBlue® is to be hydrolyzed and create ammonia.
This ammonia deoxidize with NOx which contents of the exhaust gas and resolute into nitrogen (N_2) and water (H_2O).

- DEF/AdBlue® becomes crystallized and white powder when it is dried.
  When find crystallized DEF/AdBlue® on the surface of the DEF/AdBlue® tank, wipe out thoroughly with clean cloth.
- Do not smell and come closer the face when open the filter cap of the DEF/AdBlue® tank.
  DEF/AdBlue® may be smell if it warmed.
- DEF/AdBlue® froze -11°C (12°F) below zero.
  Don't apply any heat to the DEF/AdBlue® tank when it is frozen.
  This machine equipped defrosting device and DEF/AdBlue® will melt while in operation.

⚠ WARNING

Dispose the DEF/AdBlue® as industrial wastes and strictly follow the regulations/provisions specified by regional authority.

⚠ WARNING

Use the DEF/AdBlue® only for reducing the NOx emission.
If operated this machine without use of DEF/AdBlue® may subject to punishment.

Reference Only

- The pot life of DEF/AdBlue® is differ with stored temperature.
  Keep in the cool and dark place as much as possible.

Stored Temperature °C (°F)	Pot Life
0 (32)	∞
10 (50)	75 years
20 (68)	11 years
30 (86)	23 months
40 (104)	4 months
50 (122)	1 month
60 (140)	1 week

Reference Only

DEF/AdBlue® REMAINING QUANTITY

1. The engine output limitation will be limited step by step as follows.
   (DEF/AdBlue® tank capacity : Approx. 60 L)

(1) Caution remaining amount	–	DEF/AdBlue® bar gauge 3 blocks	Change DEF/AdBlue® bar gauge color to yellow. (No engine output limitation)
(2) Remaining amount warning 1	RL1	DEF/AdBlue® bar gauge 2 blocks	Change DEF/AdBlue® bar gauge color to red. Display RL1 and issue intermit sound. (No engine output limitation)
(3) Remaining amount warning 2	RL2	DEF/AdBlue® bar gauge 2 blocks	Display RL2 and issue intermit sound. (No engine output limitation)
(4) Remaining amount output limit 1	RL3	DEF/AdBlue® bar gauge 1 blocks	Display RL3 and change intermit sound. (Engine max. speed and output become half)
(5) Remaining amount final limit	RL4	DEF/AdBlue® bar gauge 0 blocks	Display RL4 and change continuous sound. (Engine speed 800 min^{-1} limit and lever control limitation)

⚠ CAUTION

Replenish the DEF/AdBlue® immediately when warning of remaining quantity has issued.

⚠ CAUTION

The burning (regeneration) of soot will not enable to do when enter to the engine output limitation situation due to inducement control.
Pay attention to the number of blocks on soot accumulation bar gauge.

⚠ WARNING

- **Under the final limitation, the crane operation is not possible.**
  Perform the respective treatments according to the warning before enter to the final limitation.
- **There is a possibility of not restating the engine if stop the engine under the final limitation.**

Reference Only

2. Measure against remaining quantity warning "RL1" and "RL2"

When indicate the warning of "RL1" or "RL2", take action as follow.

(1) Turn a key switch to OFF position.
(2) Replenish the DEF/AdBlue® (20 L or more)
(3) Turn the key to ON position and confirm if the warning has been released.

* To release the warning after replenish the DEF/AdBlue®, It may take 6 to 10 minutes.
In case the warning is not released, confirm the DEF/AdBlue® gauge level if 4 blocks or more and repeat step (1) to (3) above.

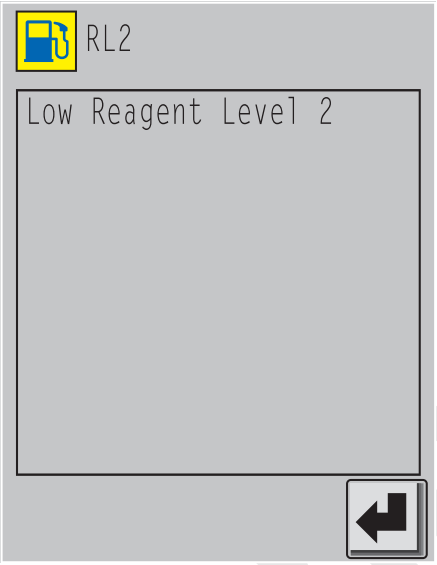

3. Measure against output limitation 1 and remaining quantity final limitation

When indicate the warning of "RL3" or "RL4", take action as follow.

(1) Turn a key switch to OFF position.
(2) Replenish the DEF/AdBlue® (20 L or more)
(3) Turn the key to ON position and confirm if the warning has been released.

* To release the warning after replenish the DEF/AdBlue®, It may take 6 to 10 minutes.
In case the warning is not released, confirm the DEF/AdBlue® gauge level if 4 blocks or more and repeat step (1) to (3) above.

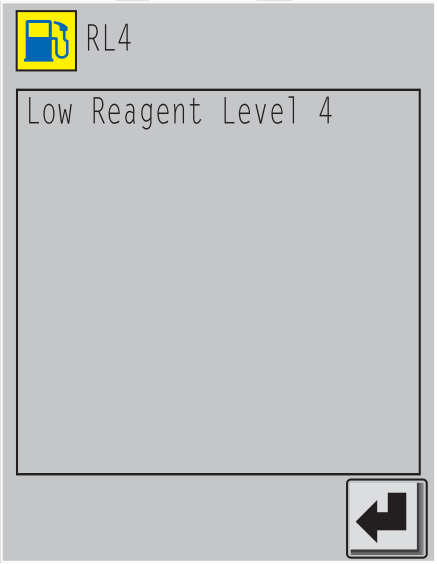

(4) Turn the key to OFF again.
(5) Confirm the acceleration grip is in low idle and control levers are in neutral position.
If in case of the G engine mode is selected, change to power mode.
(The details of the G engine mode, refer to "G ENGINE CONTROL" in this chapter "2.3.11 HOOK HOISTING/LOWERING OPERATION".)
(6) Start the engine and confirm if the engine speed rise to 2,100 min^{-1} with the acceleration grip.

* If the engine output limitation is not released, repeat the step (4) and (6) above.

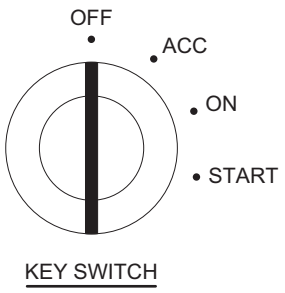

Reference only

DETERIORATE THE DEF/AdBlue® QUALITY

1. When detect the DEF/AdBlue® quality is abnormal, the engine output limitation will be limited step by step according to elapse of time as follows.

(1) Quality warning 1	RQ1	Quality abnormal detect	Display RQ1 and issue intermit sound. (No engine output limit.)
(2) Quality output limit 1	RQ3	60 minutes after detect quality abnormal	Display RQ3 and change intermit sound. (Max engine speed and output become half.)
(3) Quality final limit	RQ4	210 minutes after detect quality abnormal	Display RQ4 and change intermit sound. (Engine speed 800 min^{-1} limit and lever control limitation)

⚠ CAUTION

Replace with new DEF/AdBlue® specified immediately when warning of quality has issued.

⚠ CAUTION

The burning (regeneration) of soot will not enable to do when enter to the engine output limitation situation due to inducement control.
Pay attention to the number of blocks on soot accumulation bar gauge.

⚠ WARNING

- **Under the final limitation, the crane operation is not possible.**
  Perform the respective treatments according to the warning before enter to the final limitation.
- **There is a possibility of not restating the engine if stop the engine under the final limitation.**
- **Enter to the final limit within 30 minutes when detect the abnormal again within 40 hours (hour meter) after rectify to the normal condition.**

⚠ WARNING

Use the DEF/AdBlue® only otherwise not only facing the above limitations but also lead to damage the internal parts of engine and other components.

Reference Only

2. Measure against quality warning “RQ1”

When indicate the warning of “RQ1”, take action as follow.

(1) Turn a key switch to OFF position.
(2) Drain the DEF/AdBlue® from the tank and fill new specified DEF/AdBlue® (20 L or more)
(3) Turn the key to ON position and confirm if the warning has been released.

* To release the warning after replace the DEF/AdBlue®, It may take 6 to 10 minutes.
In case of the warning is not released, repeat step (1) to (3) above.

* Even after performed the above repetition, still the warning is remain, contact authorized Manitowoc distributor for clean the DEF/AdBlue® sensor and tank.

Reference Only

3. Measure against quality output limitation and final limitation

When indicate the warning of “RQ3” or “RQ4”, take action as follow.

(1) Turn a key switch to OFF position.
(2) Drain the DEF/AdBlue® from the tank and fill new specified DEF/AdBlue® (20 L or more)
(3) Turn the key to ON position and confirm if the warning has been released.

* To release the warning after replace the DEF/AdBlue®, It may take 6 to 10 minutes.
In case of the warning is not released, repeat step (1) to (3) above.

* Even after performed the above repetition, still the warning is remain, contact authorized Manitowoc distributor for clean the DEF/AdBlue® sensor and tank.

(4) Turn the key to OFF again.
(5) Confirm the acceleration grip is in low idle and control levers are in neutral position.
If in case of the G engine mode is selected, change to power mode.
(The details of the G engine mode, refer to “G ENGINE CONTROL” in this chapter “2.3.11 HOOK HOISTING/LOWERING OPERATION”.)
(6) Start the engine and confirm if the engine speed rise to 2,100 min^{-1} with the acceleration grip.

* If the engine output limitation is not released, repeat the step (4) and (6) above.

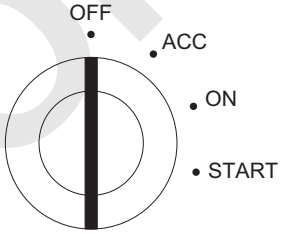

KEY SWITCH

Reference Only

SCR SYSTEM PARTS FAILURE

1. When detect the SCR related parts failure, the engine output limitation will be limited step by step according to elapse of time as follows.

(1) SCR parts failure output limit 1	TF2	Detect parts failure	Display TF2 in the monitor and issue intermit sound. Engine output is limited to 75%
(2) SCR parts failure output limit 2	TF3	60 minutes after detect parts failure	Display TF3 in the monitor and change intermit sound. Engine speed and output is limited to half.
(3) SCR parts failure final limit	TF4	210 minutes after detect parts failure	Display TF4 in the monitor and change intermit sound. Engine speed 800 min^{-1} limit and lever control limitation

Reference Only

2. **Measure against scr parts failur output limitation 1, 2 and final limitation**

   When indicate the warning of “TF2” “TF3” or “TF4”, contact authorized Manitowoc distributor immediately.

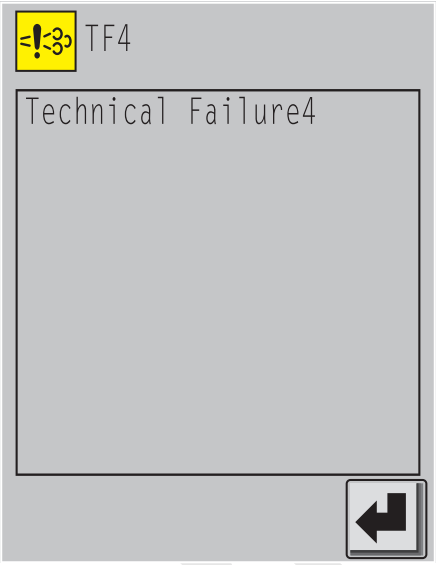

CAUTION

The burning (regeneration) of soot will not enable to do when enter to the engine output limitation situation due to inducement control.
Pay attention to the number of blocks on soot accumulation bar gauge.

WARNING

- **Under the final limitation, the crane operation is not possible.**
  Before entering to the final limitation, contact authorized Manitowoc distributor.
- **There is a possibility of not restating the engine if stop the engine under the final limitation.**
- **Enter to the final limit within 30 minutes when detect the failure again within 40 hours (hour meter) after rectify to the normal condition.**

WARNING

If operated the machine continuously with the warning of inducement control indicated may result in the engine or related component damage.

Reference Only

FINAL LIMITATION RECOVERY MODE

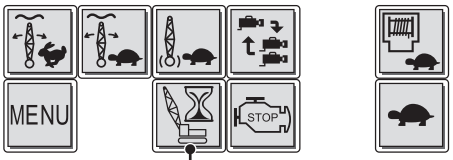

FINAL LIMIT RECOVERY ICON

Under the final limitation, the crane operation is not possible.

Display following warning and enter to the final limitation and “FINAL LIMIT RECOVERY ICON” is pop up.
When press this icon, the crane can be able to operate temporally for evacuation purpose.

Residual quantity final limit (RL4)	DFE/AdBlue® bar gauge 0 block
Quality final limit (RQ4)	210 minutes after quality abnormal detect
SCR system parts final limit (TF4)	210 minutes after SCR parts failure detect

CAUTION

- **The final limit recovery icon use only at the evacuation purpose.**
- **The crane can be able to operate temporally but the motion is very slow.**
- **The crane operation may be difficult depending on the work load.**
- **There is a possibility of stalling the engine at evacuation when perform the combined controls.**

WARNING

- **Under the final limitation, the crane operation is not possible.**
  Before entering to the final limitation, contact authorized Manitowoc distributor.
- **There is a possibility of not restating the engine if stop the engine under the final limitation.**

WARNING

- **If operated the machine continuously with the warning of inducement control indicated may result in the engine or related component damage.**
- **Perform the action to normal return as soon as possible after evacuation.**

Reference Only

2.3.6 AUTO IDLE STOP FUNCTION

This function is designed to stop the engine while no operation of the crane is made to save the fuel.

1. When the auto idle stop switch is turned ON located on the rear switch panel, this function becomes effective.
   In case of this switch is in OFF position, the engine can be stopped manually at only when the stop switch is displayed

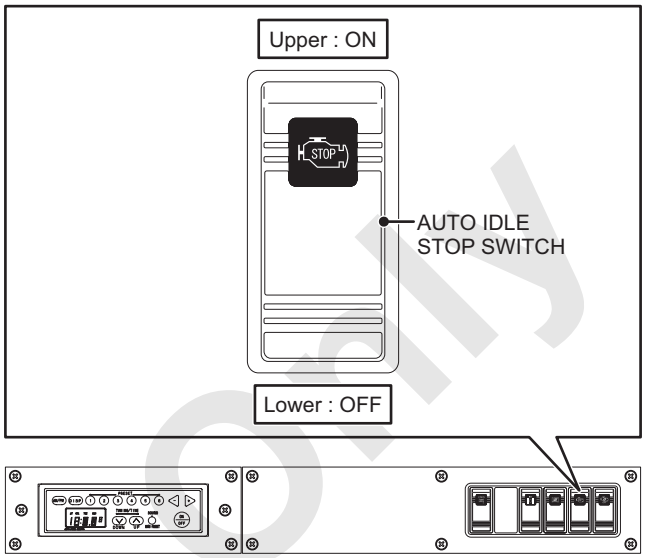

REAR SWITCH PANEL

Reference Only

2. When the auto idle stop switch turns ON, the engine stop conditions are displayed on the monitor.
   The item is met the requirement to stop lights up in green color.

* If the machine has an error, the stop condition display will not be shown, since the priority is given to display the error message.

Indication area for conditions to stop the engine

CONDITIONS TO STOP THE ENGINE

Condition to stop	Icon	Details of condition
(1) Swing brake		The swing brake is engage side.
(2) Engine speed		The engine speed is 760 to 840 min^{-1} (760 to 840 rpm).
(3) Remote control switch box		Not connected remote control cable to base machine.
(4) Soot burning (regeneration)		DPF regeneration is not in progress.
(5) Engine coolant temperature		The engine coolant temperature is within the specified range.
(6) Control lever		All control levers are in the neutral position.
(7) Boom/Jib lowering mode		LMI shall not be in the Boom/Jib lowering mode.
(8) AIS cancel		At least 5 min is passed after the AIS cancel.
(9) Hydraulic oil temperature		The hydraulic oil temperature is within the specified range.
(10) Exhaust system temperature		The exhaust system temperature is within the specified range.
(11) Winch mode		All winches are neutral brake mode.
(12) Assy/disassy mode		LMI shall not be in the assy/disassy mode.
(13) Battery		The battery residual shall be above the specified level.
(14) Lifting load		The lifting load is lower than the specified. * However this condition does not need to become to start the countdown. (May require longer time)

Reference Only

3. When the conditions are satisfied, the countdown message is displayed.
   When the numeric number reaches to zero, the engine becomes stop.

   When the stop icon is pressed, the engine can be stopped even if the countdown is on the way. When the cancel icon is pressed, the countdown is cancelled, however as far as the stop icon is indicated, the engine can be stopped manually.

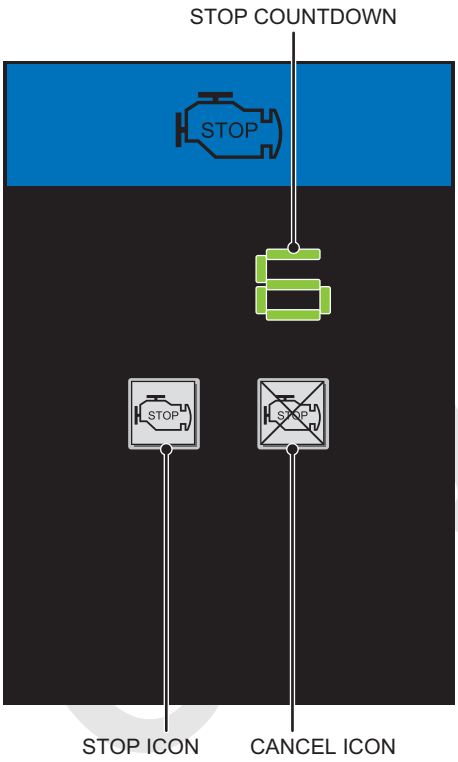

Note

The countdown will start from "10" if in case that the lifting load is within specified value however the lifting load is exceeding specified value, starting from "100".
(May be started from "99" depending on the communication condition.)

Note

The indication of countdown will disappear, even if one of the conditions to stop engine becomes invalid. When all conditions satisfied again, countdown will resume from beginning.

4. When the engine is stopped either by auto idle stop function or manual stop, the engine can be restated by turning the accelerator grip.
   Turn the accelerator grip by approximate 1/4 once return the accelerator back in the low idle position.

   Once the key switch turn to the OFF position, the engine can be restated as normal starting procedure.

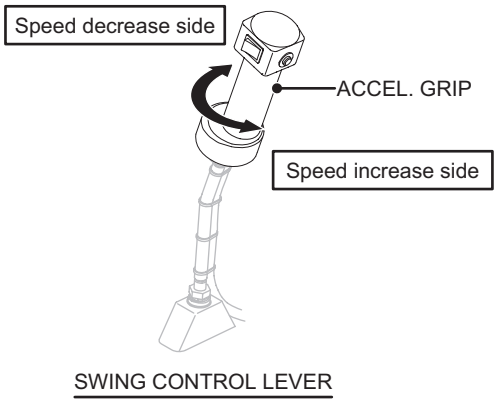

⚠ CAUTION

During auto idle stop of the engine, the battery power is used.
When you leave the operator's seat, be sure to turn OFF the key and take all safety measure.

Reference

2.3.7 FUNCTION LOCK LEVER

The function lock lever is the safety device to make machine not to move even if the persons body touches the control lever when getting ON or OFF the operators seat.
At lock position control of each drum, travel and swing can't be performed.

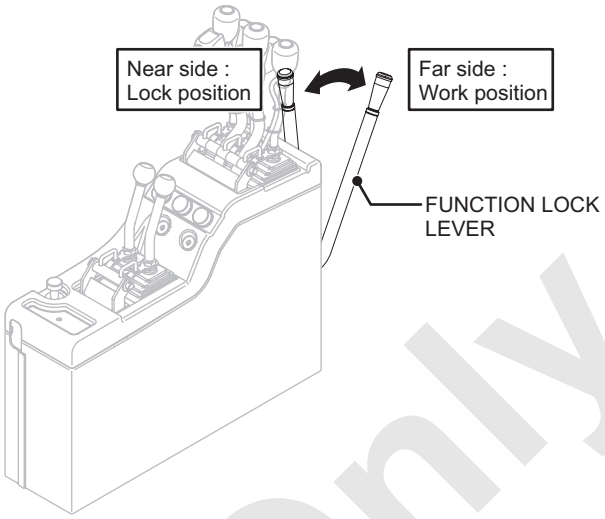

Pull to near side	Lock position
Push to far side	Work position

Turn the function lock lever to "WORK" position when the machine is to be operated.
Whenever leaving from the operator's seat, ensure to stop the engine and turn the function lock lever to "LOCK" position.
Ensure to turn the function lock lever to "LOCK" position at work completion or at transportation of machine.

⚠ CAUTION

If the function lock lever is set to the "LOCK" position while any of control levers is operated, rotation of the drum or travel is kept stopped.
Under this condition, even if the function lock lever is returned to "WORK" position, no motion becomes operational.
After the control lever is returned to the neutral position, the control becomes possible again.

⚠ DANGER

Do not set the function lock lever to the "LOCK" position during operation.
Otherwise, all the operation functions are suddenly stopped, causing extreme danger.
Failure to observe this precaution may result in a serious injury or loss of life.

Reference Only

2.3.8 TRAVELING OPERATION

WARNING

- **Assign the signalman at visible place from the operator.**
- **Confirm that people and obstacles are kept out of the traveling area.**
- **Sound the horn to warn the surrounding people before traveling.**
- **Be ensuring the machine stability especially when the boom is long, boom angle is high and the ground condition is doubtful and perform safe traveling.**

WARNING

As to the stability in swing and traveling to avoid the machine turnover, refer to the article "8.4 SWING AND TRAVEL STABILITY".
Failure to observe this precaution may result in a serious injury or loss of life.

The travel speed is controlled by turning the accelerator grip and the adjusting of the control lever stroke to forward and backward.
By selection of the travel speed select switch, select high/low speed.

High speed	Use this speed on good ground condition.
Low speed	Use this speed when more traction force is required on bad ground condition.

Adjust the right/left travel control lever stroke on the rough terrain where may deflect the traveling.

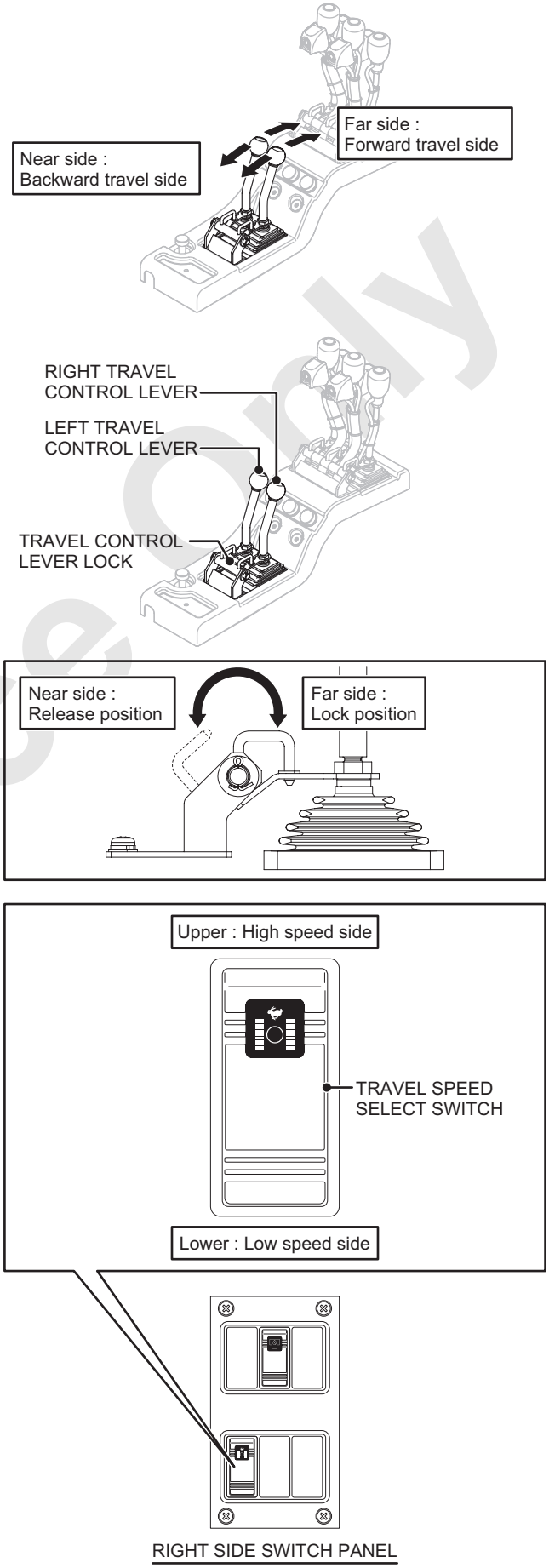

RIGHT SIDE SWITCH PANEL

Reference Only

TRAVELING DIRECTION

- Traveling forward means that the machine moving to the idler direction and traveling backward is toward to the travel motor direction.

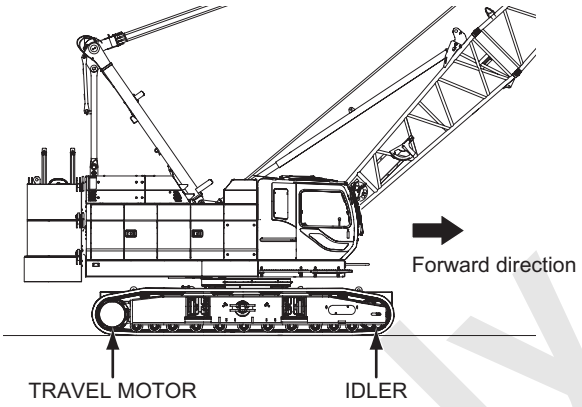

- In order to identify front and rear of the lower machinery, the crawler shoes have "△" marks. When the cab positions to the travel motor side, use caution with traveling operation in reverse only.

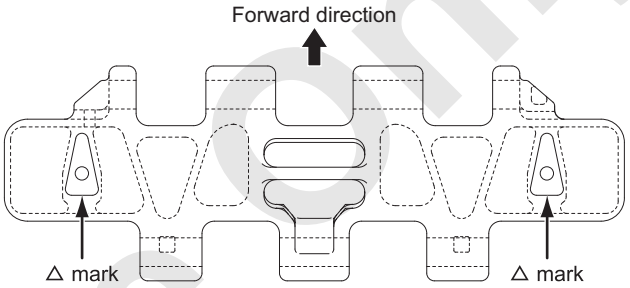

Reference only

OPERATION METHOD

1. Release the travel control lever lock.

2. Select high or low speed by the travel speed select switch according to the requirement of traveling.

3. When the travel speed selector switch is placed in the high speed position, pivot turn and spin turn due to large travel resistance cannot be operated.
   Turn the switch to Low speed position for pivot turn and spin turn.

4. Engage the control lever lock when not to travel the machine.

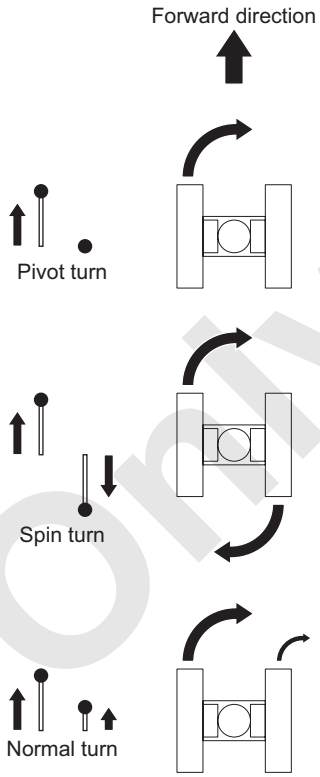

⚠ WARNING

- **Operate the control lever slowly.**
  Abrupt control lever operation is very dangerous, and may create the unexpected loads to the base machinery and the attachment or load swinging.
- **If the front or rear drum is operated while traveling the machine, it will cause of danger such as the traveling speed/direction changes. To perform such simultaneous operation, slow down the travel speed and slowly operate the drum.**

⚠ CAUTION

Do not use the travel speed select switch during traveling.
It may cause deflected travel.

⚠ CAUTION

When the machine has travel on a slope, improve the slope gradually change at starting and stopping parts so that the machine may not be sudden inclination and turnover.
Failure to observe this precaution may result in a serious accident.

Reference Only

2.3.9 SWINGING OPERATION

WARNING

- **Ensure no personnel and obstacles are within the rear end radius of swing and beneath the attachment.**
  Failure to observe this precaution may result in a serious injury.
- **Sound horn signal warn personnel surroundings.**
  Failure to observe this precaution may result in a serious injury or loss of life.
- **As to the stability in swing and traveling to avoid the machine turnover, refer to the article "8.4 SWING AND TRAVEL STABILITY".**
  Failure to observe this precaution may result in a serious injury or loss of life.

The swing speed is controlled by turning the accelerator grip and the adjusting of the control lever stroke.

1. Kind of alarm can be selected by the swing alarm select switch.

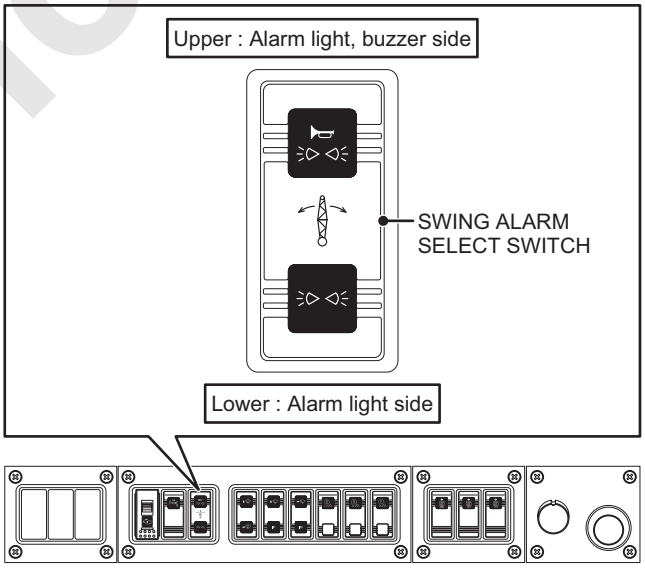

LEFT SIDE SWITCH PANEL

Reference Only

2. Select free (high/low) speed or brake (low) by swing mode select icon based on work content. At the brake mode (low) or free (low), swing max. speed becomes lowered.

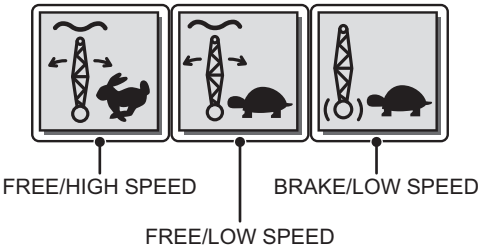

WARNING

Operate the control lever slowly.
Abrupt control lever operation is very dangerous, and may create the unexpected loads to the base machinery and the attachment or load swinging.

Mode	Work content	Movement
Free/high speed	Crane, lifting magnet and clamshell work.	With the lever neutral mode becomes swing free. Select the swing speed based on the work.
Free/low speed	Long boom crane	
Brake/low speed	Long boom crane	With the lever neutral, swing brake is engaged. (Hydraulic brake)

* LOW SPEED At high idling about 50% of high speed.
At low idling about 70% of high speed.

At the long boom crane work, if the select icon is kept to brake/low speed side, operation is easy but hydraulic control is being applied to reduce swing stop shock and swing power is lowered and swing speed becomes slow.

CAUTION

In order to avoid damage on the base machine and the hydraulic components, the swing mode select icon should be manipulated at the swing brake switch is in the engage side with the engine at low idle.
Do not perform switching of swing mode while in swing motion.
Failure to observe this precaution may lead to parts damage.

Reference Only

3. Release the swing lock operation lever so that the swing lock pin is disengaged and the swing brake switch turn to disengage side so that release the swing brake.

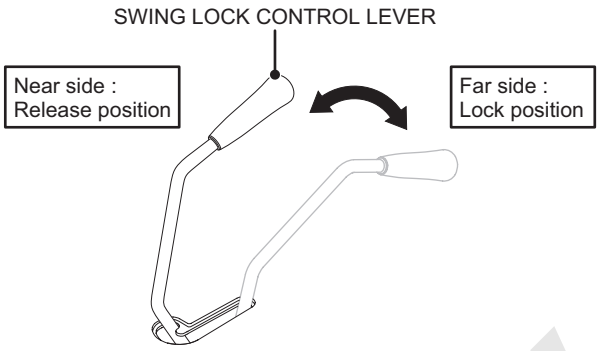

DANGER

Engage the swing brake and swing lock should be performed when the upper machinery is completely stopped.
Use of these to stop the swing motion creates huge burden to the swing mechanism and the attachment and may lead to accident.
Failure to observe this precaution may result in a serious accident and loss of life.

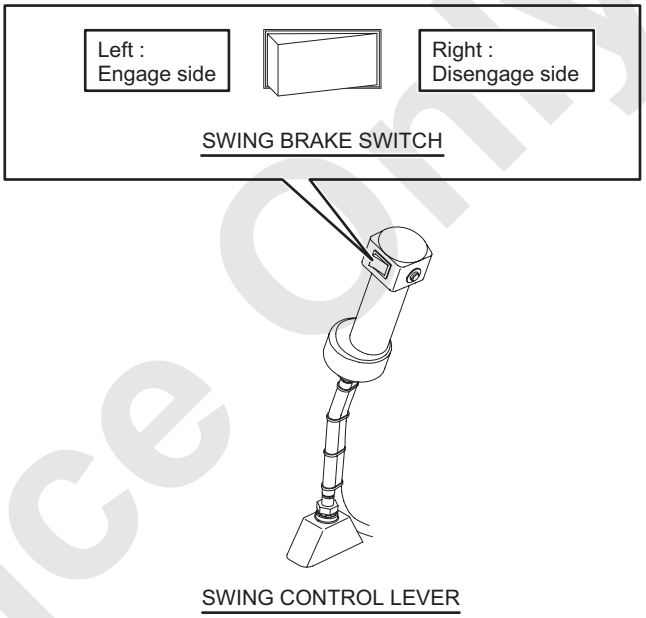

CAUTION

- **Due to the wind or ground inclination the upper machinery may start swing unexpectedly.**
  Take extra care when disengaging the swing brake.
  Failure to observe this precaution may result in a serious accident.
- **If the engine is started with the swing brake disengaged or if the function lock lever is turned to lock position with the swing brake disengaged, the swing brake is kept engaged. In such case, turn the swing brake to "ENGAGE" side once and then turn to "DISENGAGE" side to release the swing brake.**
- **If the function lock lever is in "LOCK" position, swing brake is engaged regardless of swing brake switch position.**

Reference Only

4. Pulling the lever backward is the upper machinery to swing right and pushing forward to swing left

To stop the swing motion

At swing free mode	Move the lever slowly to the counter direction of swing.
At swing brake mode	Return the lever slowly to the neutral position.

In case of strong wind or on the slope, the upper machinery may start swinging by itself. Therefore engage the swing brake.

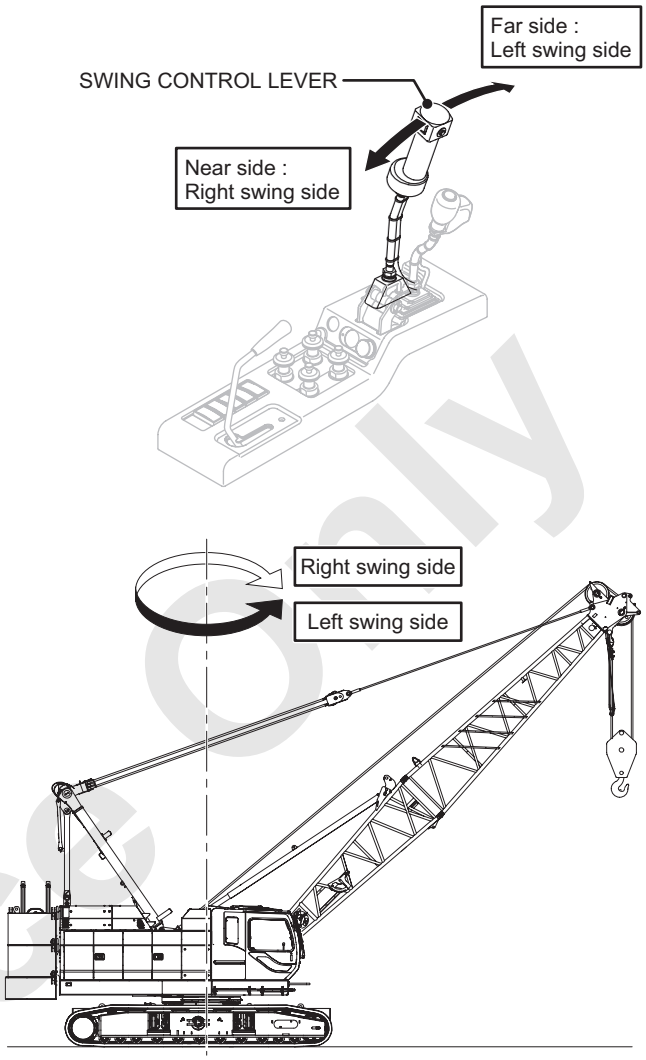

DANGER

Engage the swing brake and swing lock should be performed when the upper machinery is completely stopped.
Use of these to stop the swing motion creates huge burden to the swing mechanism and the attachment and may lead to accident.
Failure to observe this precaution may result in a serious accident and loss of life.

CAUTION

Never do abrupt acceleration or deceleration of swing control which may cause side loading at swinging.
These may damage to the attachment and is very dangerous.
Failure to observe this precaution may result in a serious injury or loss of life.

Reference Only

5. When pause the work, apply swing lock at the upper machinery align to the swing lock position (upper machinery is facing parallel or right angle to the crawler).

- Only when upper machinery is at swing lock position (upper machinery is facing parallel or right angle to the crawler), swing lock can be applied.
- After engaging the swing lock, lightly swing to both directions to confirm surely engaged.
- In the above condition, if the swing can be made, the swing lock position is incorrect.
- Release the swing lock and swing the upper machinery to the correct place and engage swing lock again.
  Swing lock is engaged correctly if both direction of swing can't be made.

⚠ CAUTION

The machine may damage when swinging with the swing lock engaged other than the lock position. Failure to observe this precaution may result in serious damage of the machine.

Reference Only

2.3.10 BOOM RAISING/LOWERING OPERATION

WARNING

Ensure that there are no personnel and obstacles within the attachment work range.
Failure to observe this precaution may result in a serious injury or loss of life.

The boom raising/lowering speed is controlled by turning the accelerator grip and the adjusting of the control lever stroke and can also be adjusted by the drum speed adjusting trimmer.

1. To release the drum lock by pushing down the boom drum lock knob.

* In case of the drum lock can't be released, may be the pawl is bit with the drum ratchet.
In this case, raise the boom drum a bit and perform the releasing by the knob again.

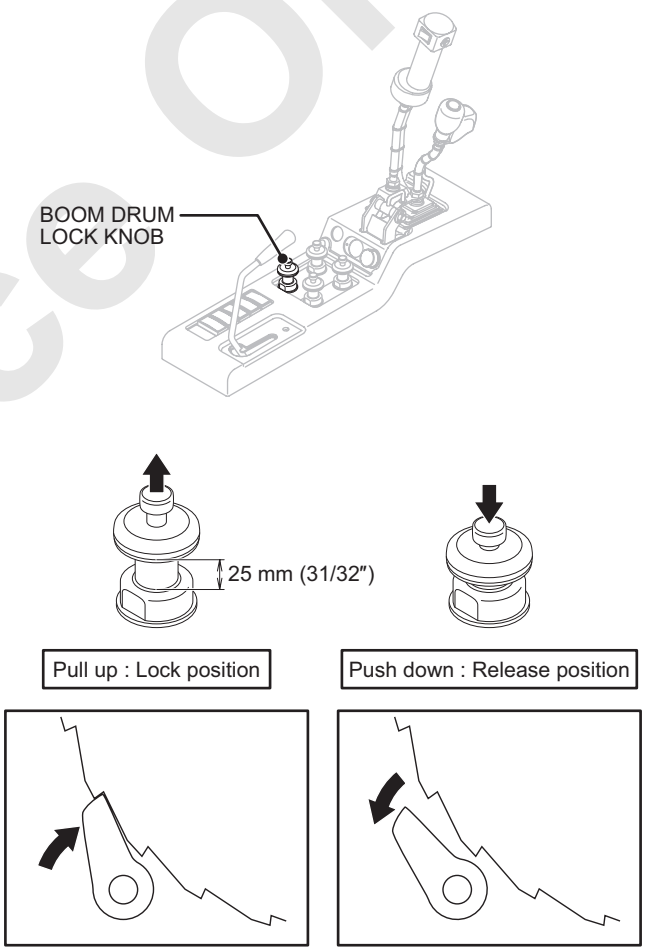

Reference Only

2. Push the boom drum control lever forward to lower the boom, and pull the lever backward to raise the boom.

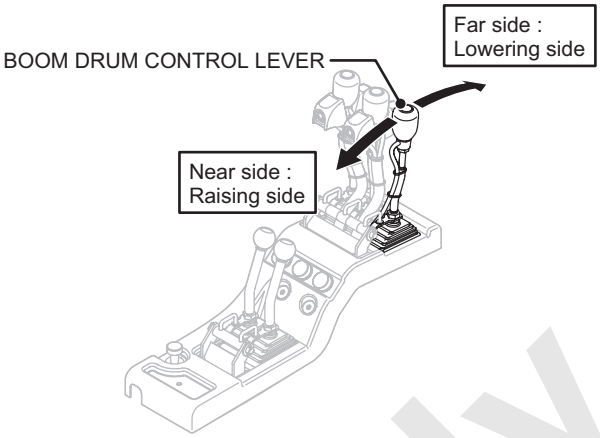

WARNING

Operate the control lever slowly.
Abrupt control lever operation is very dangerous, and may create the unexpected loads to the base machinery and the attachment or load swinging.

WARNING

While lowering the boom, do not make the boom, jib to come close to the hook.
When the hook contacts the attachment, the attachment and their wire rope may be damaged.

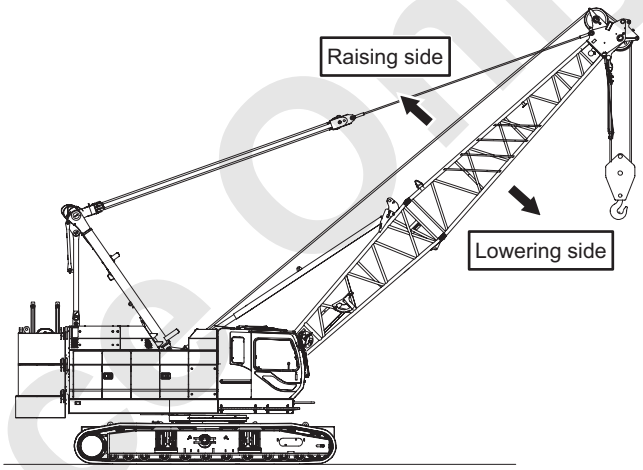

DANGER

Never engage the drum lock while lowering the hook or the attachment.
The drum or drum lock pawl may be damaged.
Failure to observe this precaution may result of damage the machine.

Reference Only

3. When the boom drum control lever is returned to the neutral, the drum brake actuates automatically and the boom is stopped and is held.

CAUTION

When returning the control lever to the neutral, ensure that it is returned surely to the neutral position.

WARNING

While lowering the boom, do not make the boom, jib to come close to the hook.
When the hook contacts the attachment, the attachment and their wire rope may be damaged.

DANGER

Never engage the drum lock while lowering the hook or the attachment.
The drum or drum lock pawl may be damaged.
Failure to observe this precaution may result of damage the machine.

4. Adjust the drum speed by the drum speed adjust trimmer based on the work condition.

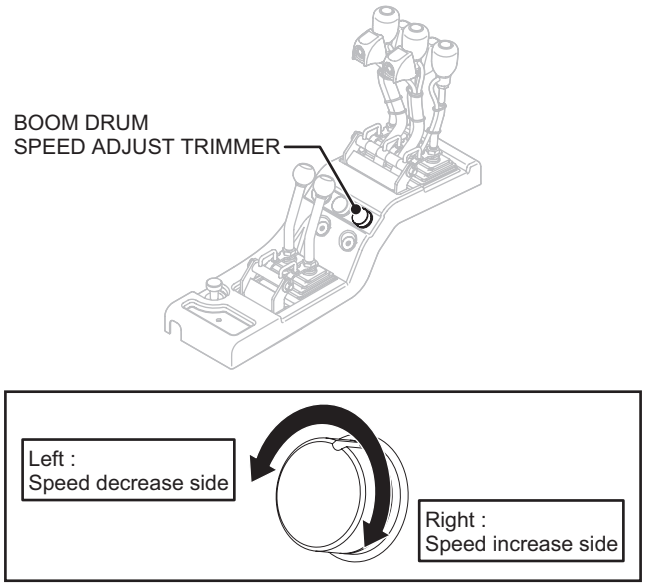

Reference Only

5. When the boom approaches the upper limit angle, the raising speed is reduced.
   The starting angle for speed reducing differs depending on the engine speed and the position of drum speed trimmer.
   When the engine is at high idle and the drum speed adjusting trimmer is at maximum position, the speed reducing starts 10 degrees before limited angle.

6. Be sure to stop the engine, and engage the drum lock before leaving the operator's seat.

   To engage the drum lock, push and hold the button, and then fully pull the knob up.
   Fully pull it up, although the resistance against pulling may be altered halfway.
   Check to see if the boom control lever is returned to the neutral and then engage the lever lock.
   Turn the function lock lever to "LOCK" position.

Reference Only

2.3.11 HOOK HOISTING/LOWERING OPERATION

WARNING

Ensure that there are no obstacles or personnel within and hanging the hook or load moving area.
Failure to observe this precaution may result in a serious injury.

DANGER

Perform the crane work with "NEUTRAL BRAKE"mode.
Crane work with "FREE FALL" mode may drop the load by operation error.

DANGER

Never engage the drum lock while lowering the hook or the attachment.
The drum or drum lock pawl may be damaged.
Failure to observe this precaution may result of damage the machine.

WARNING

When making lifts, strictly follow the capacity charts for determining the loads that can be handled as supplied by the manufacturer.
Follow good operating practice and procedures as outlined in this manual.
Failure to observe this precaution may result in a serious injury or loss of life.

Reference Only

NORMAL OPERATION

Hoisting and lowering speed is controlled by turning the accelerator grip and the drum control lever stroke and can also be adjusted by the drum speed adjusting trimmer.

1. Ensure that the free fall indication lamp is OFF.

2. Release the drum locks by pushing down the each drum lock knob.

* In case of the drum lock can't be released, may be the pawl is bit with the drum ratchet.
In this case, hoist the respective drum a bit and perform the releasing by the knob again.

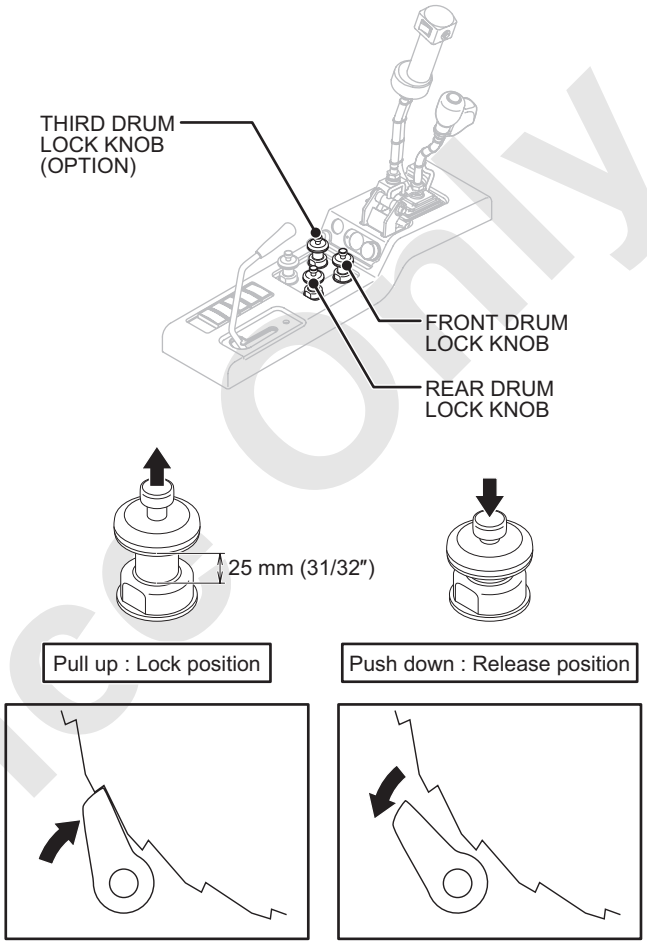

DANGER

- **When releasing the drum lock, ensure that the drum brake mode is in "NEUTRAL BRAKE MODE" to prevent from dropping the lifting load.**
  Failure to observe this precaution may result in a serious accident.
- **Brake pedal should be engaged with the pedal lock even in the neutral brake mode for safety.**
  Failure to observe this precaution may result in a serious accident.

Reference Only

3. Pushing the each drum control lever to forward to lower the hook and pulling the lever backward is to hoist the hook.

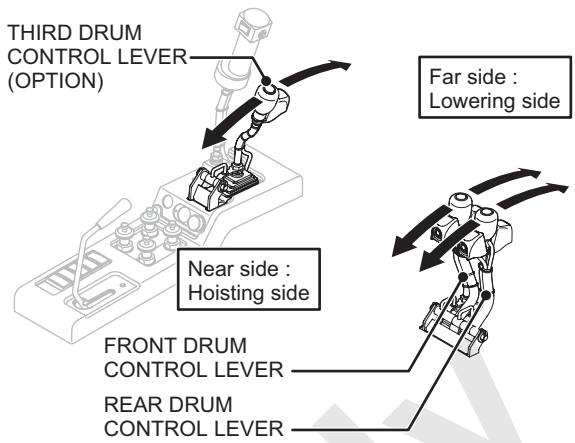

WARNING

When lowering a hook, place a foot on the brake pedal and maintain the action to apply braking at any time.
Failure to observe this precaution may result in a serious accident.

WARNING

Operate the control lever slowly.
Abrupt control lever operation is very dangerous, and may create the unexpected loads to the base machinery and the attachment or load swinging.

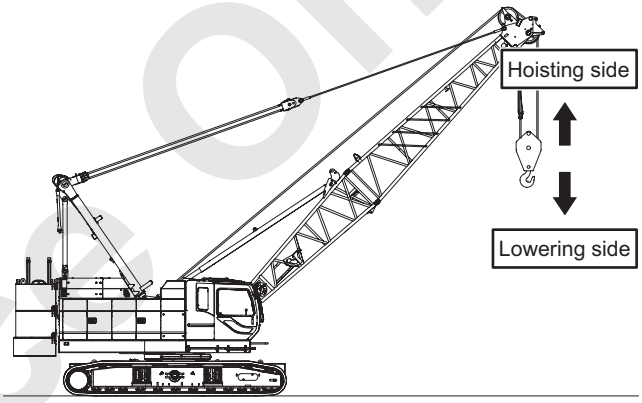

DANGER

Never engage the drum lock while lowering the hook or the attachment.
The drum or drum lock pawl may be damaged.
Failure to observe this precaution may result of damage the machine.

Note

The braking by the brake pedal while hoisting/ lowering does not function if the neutral brake mode is selected.
Whenever auto-stop occurs during hook hoisting/ lowering, immediately return the control lever to neutral.

Reference Only

4. When the drum control lever is returned to the neutral, auto-brake actuates and the hook stops.

   When the lifting load is to be held in the air for long time, engage the drum lock.

   When the drum lock is to be engaged, pull the knob up completely.
   Although pull up resistance may change on its half way, pull up to the end.

⚠ CAUTION

When returning the control lever to the neutral, ensure that it is returned surely to the neutral position.

⚠ DANGER

Brake pedal should be engaged with the pedal lock even in the neutral brake mode for safety.
Failure to observe this precaution may result in a serious accident.

Note

Simultaneous operation of the front drum with 1st speed and the rear drum with 2nd speed cannot be done due to hydraulic system.

Reference Only

5. According to working condition, adjust the speed of the drum with the drum speed adjust trimmer.

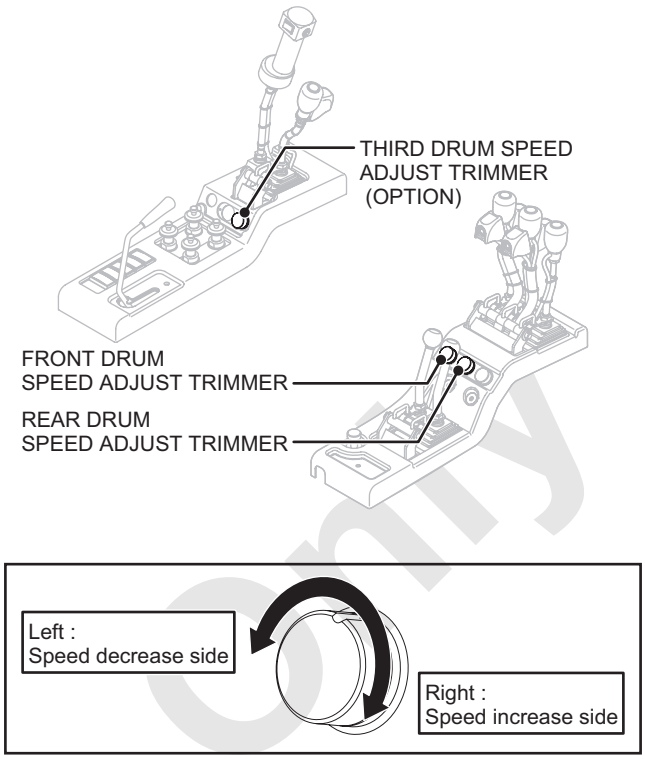

Reference Only

G WINCH CONTROL

G winch is a function to bring maximum line speed with low engine speed at no load condition.
Control as per the following procedure.

CAUTION

G winch mode is not available with a load condition to prevent damage to the machine.
Failure to observe this precaution may lead to damage parts.

1. Turn ON the G winch main switch located at the rear switch panel of the cab.
   The G winch indication lamp in the monitor becomes yellow light and the standby condition of G winch mode.

2. While in the standby condition of G winch, turn to the G winch mode when pressing the G winch switch on the front/rear control lever with the following conditions are satisfy.

- Low idling.
- No lifting load.
- Not the regeneration (soot burning) is in progress.
- Each control levers are in neutral position.

* Under the G winch mode, if one of the above becomes out of condition, the G winch mode will released and the G winch indication lamp is turned back to standby condition (yellow).

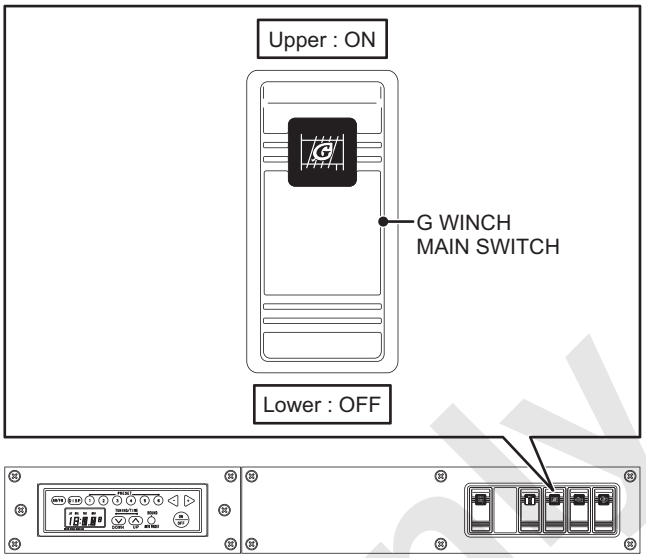

REAR SWITCH PANEL

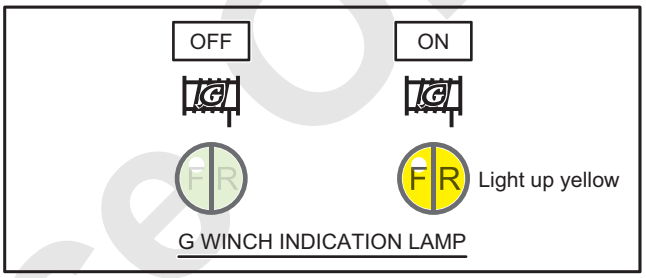

G WINCH INDICATION LAMP

Reference Only

3. The G winch mode can be selected either the front or rear drum individually.
   The selected winch indication lamp becomes light up in green.

* As for the loaded or not is to be determined with the displayed load in the monitor.
The hook uses for G winch mode is to be selected (Either front or rear drum) and use the G winch mode.

* Under the green light is ON condition, pressing the switch again can cancel the G winch mode.

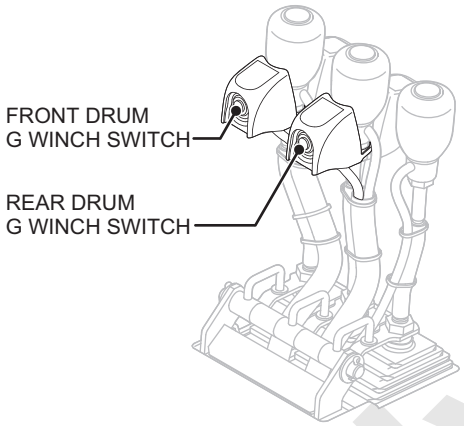

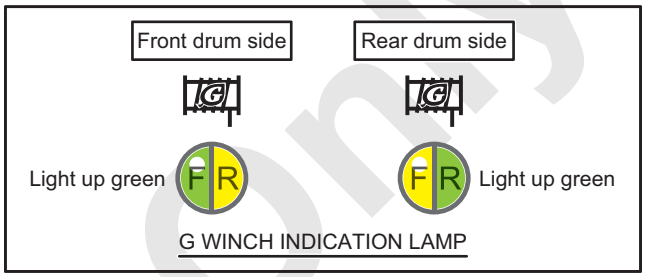

CAUTION

When switching to the G winch mode, the engine speed become limited as shown following table, but it is not abnormal.

G engine mode	900 min^{-1} (900 rpm)
Power mode	1,000 min^{-1} (1,000 rpm)

* At power mode, the engine speed can be controlled between 800 to 1,000 min^{-1}.

Reference Only

4. Operate the lever while in the G winch mode, can be obtained the high speed hoisting and lowering.

   After selection the G winch mode individually, only ONE operation is possible for high speed motion.
   When the lever is returned to the neutral position, this function is cancelled and returns to standby condition.

   If this function has to be used again, push the either front or rear G winch switch when the lever is in neutral.

⚠ CAUTION

In the lowering control, the initial speed may be slower in certain times.
This is caused by function of the counterbalance valve and is normal.
In case the front and rear drum speed adjusting trimmer are not in maximum position, maximum speed can not be obtained even under this function. Ensure to the set them to maximum position.

5. When the following warning is issued, this function can not be used.

W-48	Actual rotation is higher than no load rotation.

* When the above warning is issued, safety lower the lifting load and turn OFF the key switch.
If the warning does not disappear after restart of the engine, contact Manitowoc service shop.

Reference Only

G ENGINE CONTROL

"G ENGINE" is a function to obtain the maximum line speed under no load at lower engine speed .
This is effective to save fuel consumption which otherwise is caused by unnecessary engine high speed.

⚠ CAUTION

Under G engine mode, enough energy for heavy load work with high speed may not be obtained. Ensure to turn to power mode.

⚠ CAUTION

Under the G engine mode, when start the manual or auto regeneration the mode is to be changed to power mode automatically and is not abnormal. When complete respective processing, return to G engine mode.

1. Turn ON the G engine switch located at the rear switch panel of the cab.
   The G engine indication lamp in the monitor is lit in green while each lever is in neutral.

2. When any of the following warnings are issued, this function can not be used.
   The engine returns to power mode automatically.

W-46	Qmax cut solenoid output OFF abnormal.
W-47	Qmax cut solenoid output ON abnormal.
W-48	Actual rotation is higher than no load rotation.

* When the above warning is issued, safely lower the lifting load and turn OFF the key switch.
If the warning does not disappear after restart of the engine, contact Manitowoc service shop.

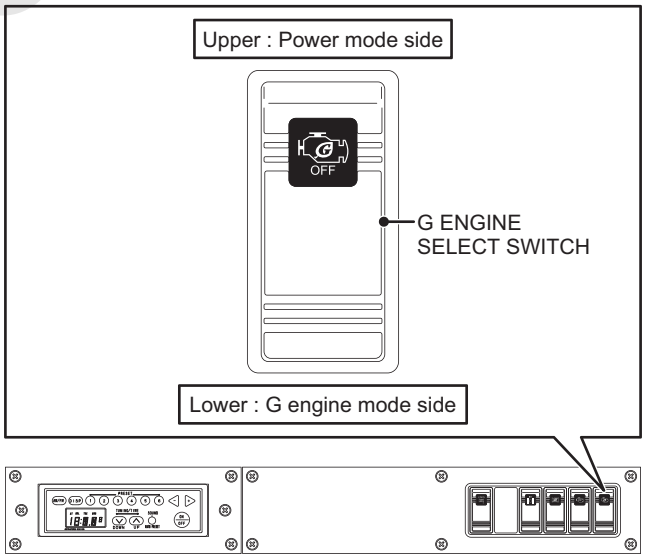

REAR SWITCH PANEL

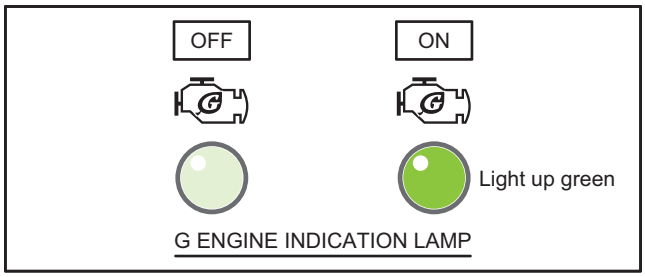

G ENGINE INDICATION LAMP

Reference Only

2.4 FREE FALL OPERATION

This section explains free fall operation.
The free fall operation must be limited to use of excavation works with the bucket or the like.

DANGER

Perform the crane work with “NEUTRAL BRAKE” mode.
Crane work with “FREE FALL” mode may drop the load by operation error.

WARNING

With the free fall mode, if auto-stop occurs due to over loading or overhoist, press the brake pedal first and then return the control lever to neutral position.
If the control lever is return to neutral before pressing the brake pedal, the lifting load may be dropped.
Failure to observe this precaution may result in a serious injuries or lose of life.

Reference Only

- When the hydraulic oil has been replaced, the feeling of brake operation may change from the experience in the past.
  In this case, contact to authorized Manitowoc distributor.

- When the messages as shown right are indicated on the monitor during the operation, the free fall function will be disabled.

  Lower the lifting load and hook to the ground and turn OFF the key switch.
  Power supply will be shut off about 90 seconds later.
  Then, restart the engine and start the operation when the message indication disappeared.
  If the messages as shown right are still indicated even if the engine has been restarted, stop the operation and contact authorized Manitowoc distributor.

SV MC1-W16

SV MC1-W17

SV MC1-W18

DANGER

When the error message is indicated, do not stop the engine with the load and hook held in the air.
Failure to observe this precaution, the load or the hook may fall.
Failure to observe this precaution may result in a serious injuries or lose of life.

Reference Only

1. Mode change (Neutral brake → Free fall)

(1) Turn the “FREE FALL LOCK MASTER KEY” located in the monitor stand bypass switch panel to release side.

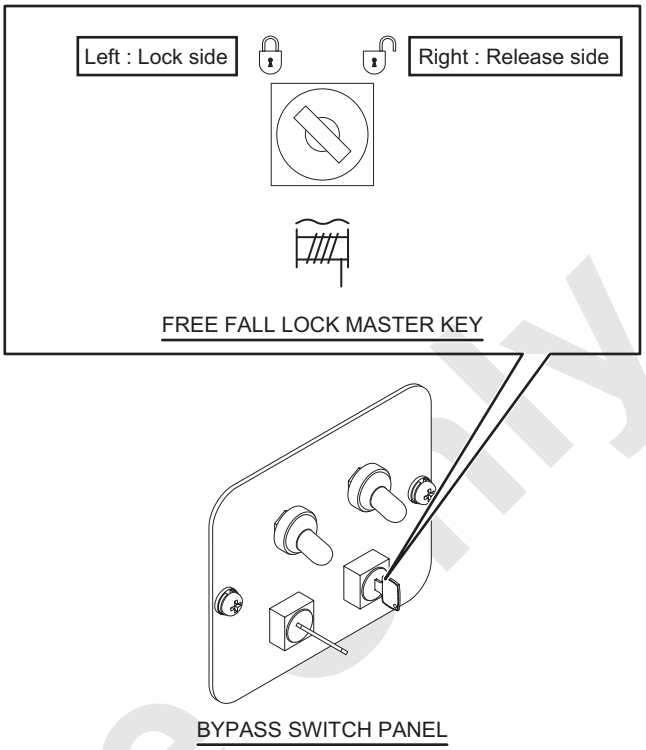

(2) Set the control lever to the neutral position and depress the brake pedal fully.
The pedal will be locked with its lock and is held at depressed position.

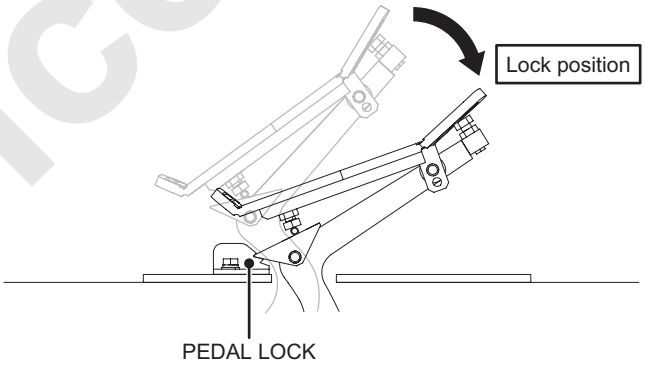

(3) Push the “DRUM BRAKE SELECT SWITCH” on the drum control lever.
The free fall indication lamp in the monitor lights up to indicate that entering to the free fall mode.

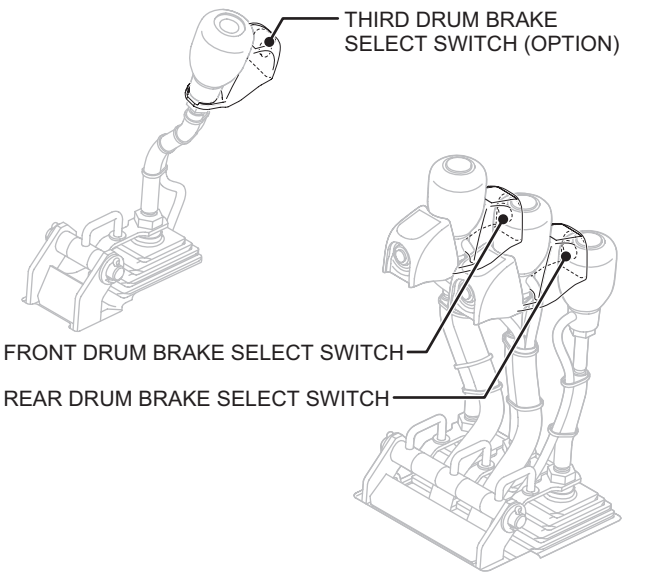

Reference Only

2. Free fall operation

(1) Press the brake pedal at its heel portion to disengage the pedal lock.

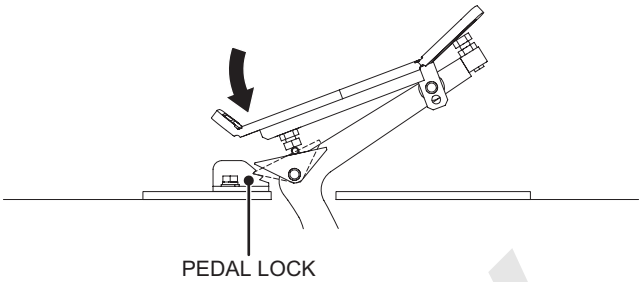

(2) Release the brake pedal gradually.
The lifting load will starts free falling.

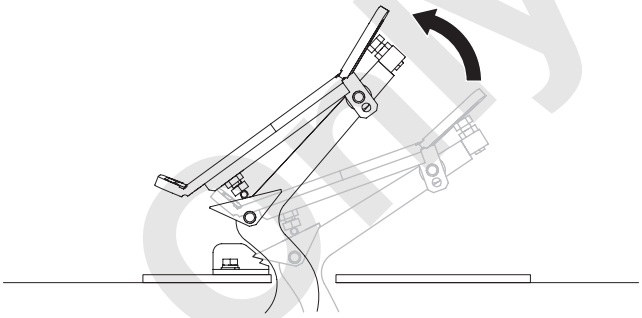

(3) Adjust the lowering speed by the amount of pressing brake pedal.

* When the brake pedal is depressed slightly, feel the pedal vibrates slightly and from this point depressing the pedal further will start works the brake.

⚠ DANGER

Never engage the drum lock while lowering the hook or the attachment.
The drum or drum lock pawl may be damaged.
Failure to observe this precaution may result of damage the machine.

⚠ CAUTION

- **Do not free fall with heavy load.**
  The control of lifting load becomes difficult by brake pedal if the free falling speed is fast. Perform free falling with lower speed as slow as possible.
- **Do not apply abrupt brake during free falling. And also do not handle the drum brake select switch and each control levers.**

Reference Only

3. Hoisting operation

(1) Depress the brake pedal fully and confirm the free falling is over and stop.

* When the brake pedal is depressed slightly, feel the pedal vibrates slightly and from this point depressing the pedal further will start works the brake.

(2) Pull the drum control lever backward, start hoisting motion even with the brake pedal is remain depressing.
(3) Return the drum control lever to the neutral position, the hoisting motion stops.

* The hoisting speed will not be affected even with the brake pedal is kept in depress position.
In order to avoid the unexpected free falling just after the stop hoisting, operate with the brake pedal kept depressing.

4. Power lowering

(1) With the brake pedal is depressing, push the drum control lever forward, lowering motion starts as the power lowering.
(2) Return the drum control lever to the neutral position, the lowering motion stops.

* The power lowering speed will not be affected even with the brake pedal is kept in depress position.
In order to avoid the unexpected free falling just after the stop lowering, operate with the brake pedal kept depressing.

5. Mode change (Free fall → Neutral brake)

(1) Depress the brake pedal fully and return the drum control lever to the neutral position.
(2) Push the “DRUM BRAKE SELECT SWITCH” on the drum control lever.
The free fall indication lamp in the monitor goes off to indicate that entering to the neutral brake mode.
(3) In case of the lifting load is to be suspended in the air long of time, apply the drum lock as well.

Reference Only

6. Handling at cold situation

   In case of free fall speed is slow due to the ambient temperature is low, by select the “FREE FALL SPEED SELECT SWITCH” in the left side switch panel to increase speed side, speed is to be increased.

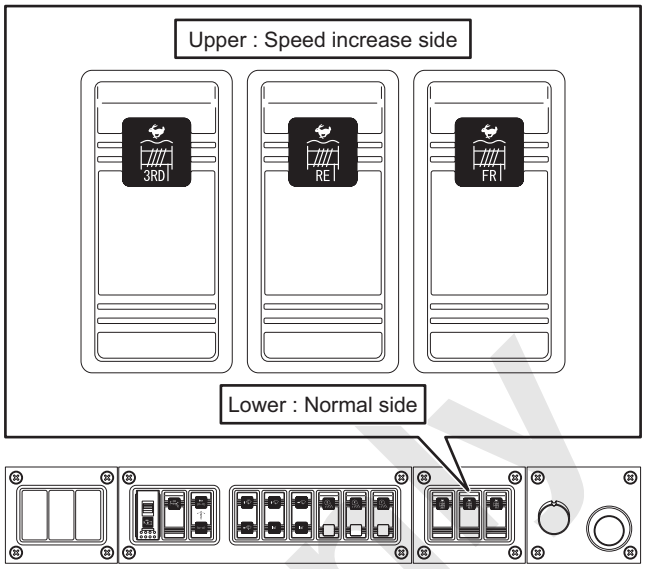

LEFT SIDE SWITCH PANEL

⚠ CAUTION

- **When changing the free fall speed select switch is in increase side, do not release the brake pedal with the hook on the ground. The drum automatically rotates to lowering side and this may cause rough spooling.**
- **While the heavy load is free falling, do not change the free fall speed select switch. A shock occurs at speed changing.**

Reference Only

2.5 CLAMSHELL OPERATION

In clamshell operation, the control levers and brake pedals are called with the designations shown in the following figure.
The basic control is as same as the crane operation.

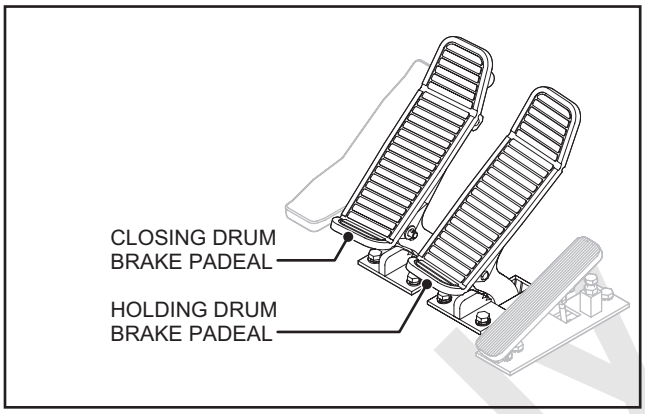

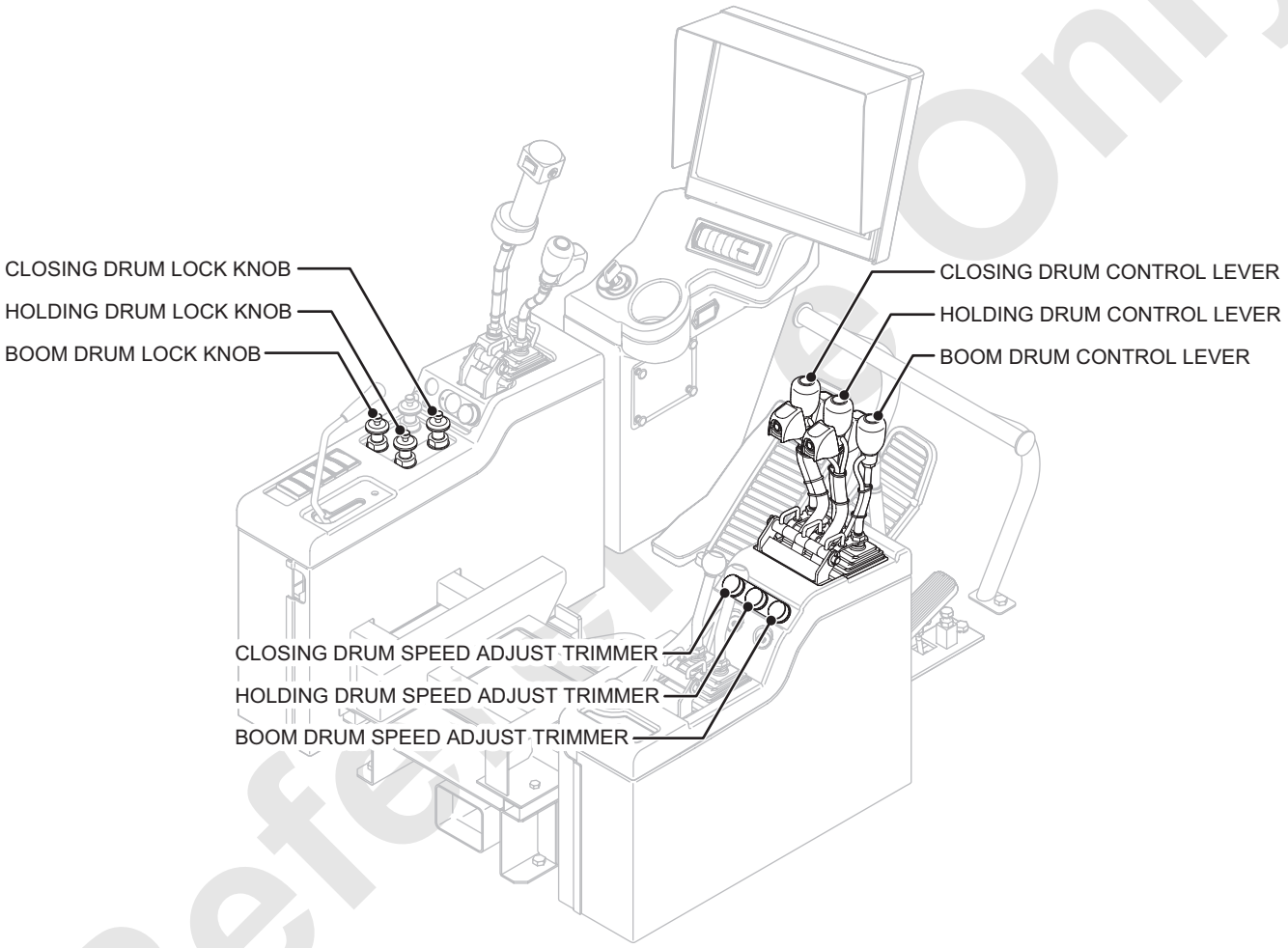

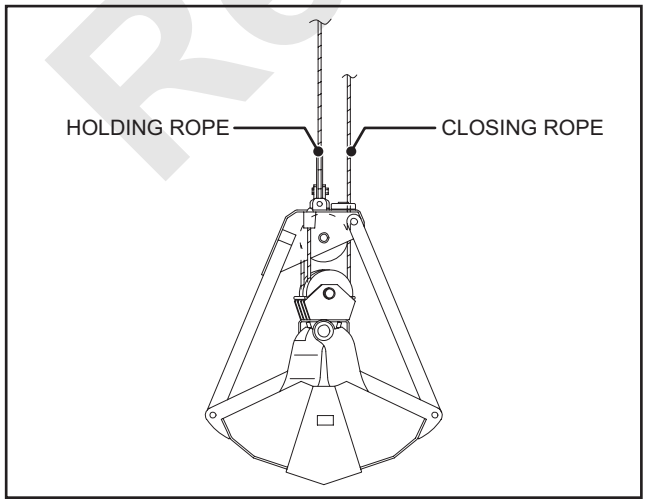

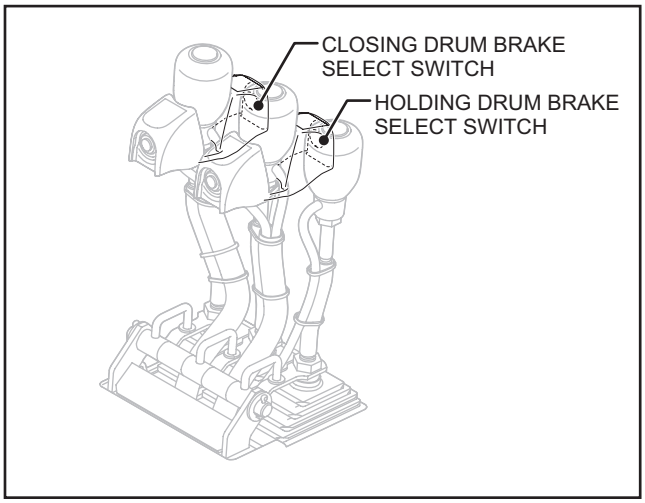

Reference Only

⚠ CAUTION

After the work is completed, lower the bucket on the ground and press the closing and holding rope brake pedals and engage the pedal locks, turn to the brake mode and engage each drum lock, and then engage the rotation lock on tagline drum after engine is stopped.

⚠ CAUTION

Since the clamshell needs repeating of bucket closing, hoisting, lowering or swing operation, it is likely that the damage to the hoist drum or boom, pin wear or missing or loosening bolts or missing may occur.
Ensure to make pre operation or after work inspection absolutely.
Failure to observe this precaution may result in a serious accident.

Reference Only

2.5.1 PREPARATION WORK

1. Select the capacity of the clamshell bucket to meet the machine specification.
   (Rated load, bucket size, digging material weight)

2. Set the hydraulic tag line rope for bucket swing prevention to the bucket and check for its proper tension.

3. Set the drum speed adjusting trimmer to maximum.

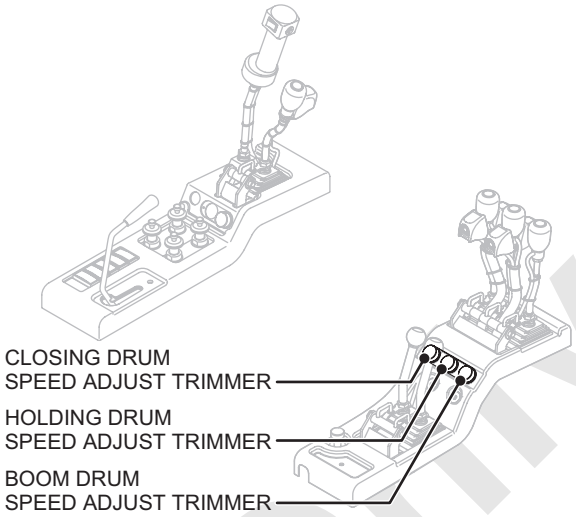

Note

As for the drum speed adjusting trimmer, closing rope and holding rope would not be synchronized other than at maximum speed position.

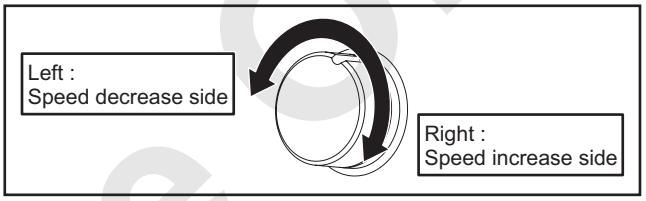

4. Turn the “WORK MODE SELECT ICON” in the monitor to ON.

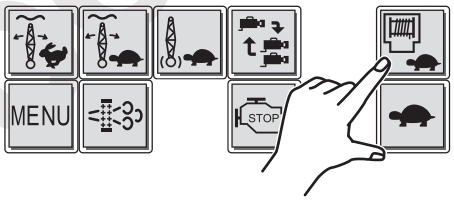

Note

In case of heavy load clamshell work, if the work mode select icon is in “OFF” (High speed) position, holding and closing rope may not be able to synchronize.

5. In case of bucket lowering of clamshell work with free fall mode, change to free fall mode refer to the article “2.4 FREE FALL OPERATION”.

6. Adjust the engine speed with the accel grip.

Reference only

7. If the clamshell rated load is programmed in the load safety device, it will function.

DANGER

Take extra care not to cause overload in the clamshell work.
Set the load about 60% to 70% of the clamshell work rated load. (Work at about 60% to 70% of the wire rope rated load.)
Do not shut off the load safety device at the clamshell work.
Work with the overload condition may cause damage on the boom or serious accident such as overturn of to the machine.

8. Setting of the controller of the load safety device.

- In case clamshell lifting capacity is specified.

  This machine specifies clamshell lifting capacity. When clamshell work has to be done, set it on the monitor screen as follows.

  Select the item according to the indication of the monitor screen.
  In case of set contents are made mistake, press BACK on the right bottom corner to return the previous display.

SETTING EXAMPLE

Attachment type	Clamshell
Boom length	18.3 m (60 ft)

(1) Push the MENU of the monitor and select .
Refer to the chapter “3.5.1 SETTING OF CRANE COFIGURATION”
(2) Attachment select screen is displayed.
Select .

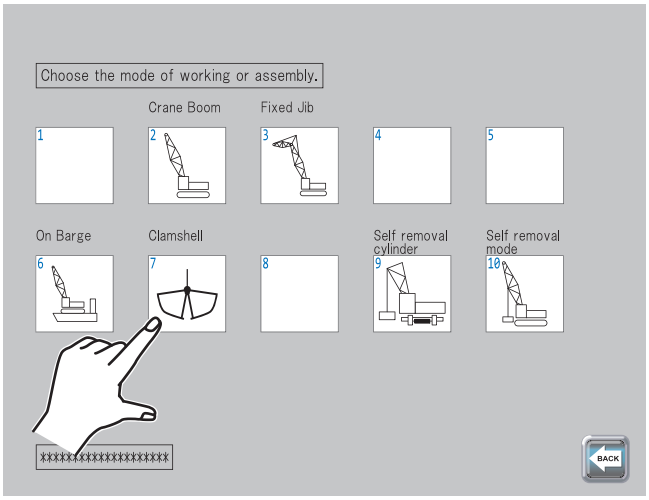

Reference Only

(3) Boom length select screen is displayed.
Select “60 ft.”.

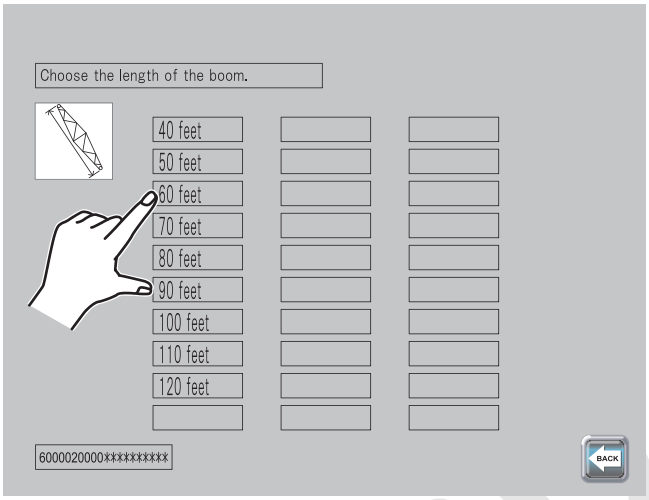

(4) Press “0” in the number of part line setting.

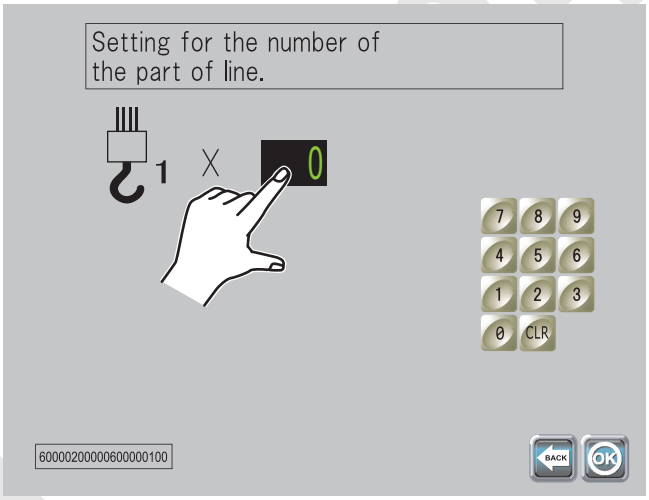

(5) Press “1” by the numeric keypad.

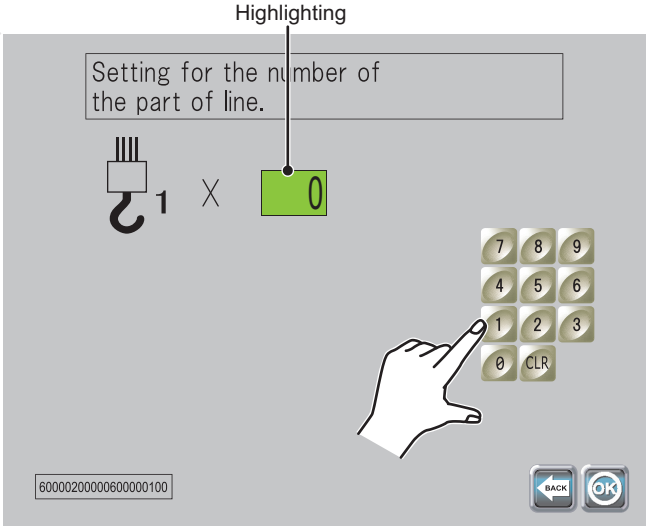

Reference

(6) Setting is completed.
Press OK .

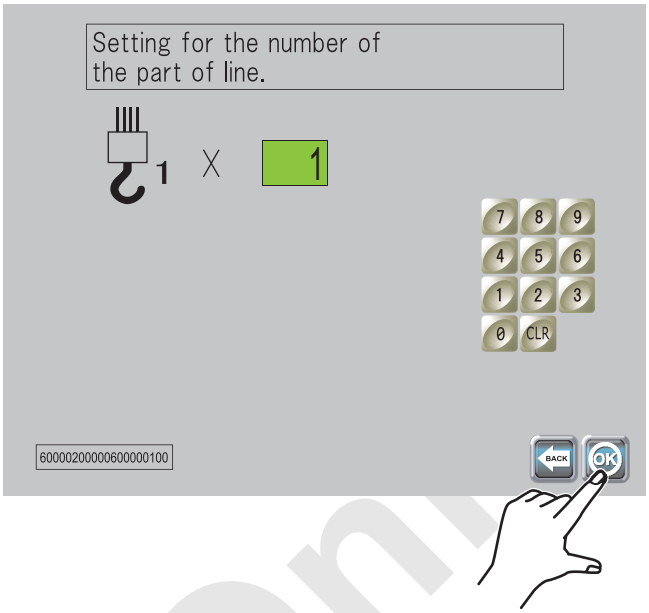

Reference Only

2.5.2 CLAMSHELL WORK

CAUTION

Never do abrupt acceleration or deceleration of swing control which may cause side loading at swinging.
These may damage to the boom or guy line and is very dangerous.
Failure to observe this precaution may result in a serious injury or loss of life.

CAUTION

Total weight of bucket and materials should not exceed the rated load.
The rated load is determined by the machine stability and boom strength.
Failure to observe this precaution may result in a serious injury or loss of life.

CONTROL LEVER AND BRAKE PEDAL OPERATION IN CLAMSHELL WORK

Work condition	Closing rope		Holding rope		Control condition and caution
	Closing drum control lever	Closing drum brake pedal	Holding drum control lever	Holding drum brake pedal	
1. Digging material	Hoist	Pedal released (Return)*	Neutral (Free condition)	Half brake	Control the holding wire rope by rear drum brake and adjust the bucket to bite into material.
2. Hoist	Hoist	Pedal released (Return)*	Hoist	Pedal released (Return)*	Hoist both closing wire rope and holding wire rope together to control not to allow one side loosening.
3. Stop	Neutral	Pedal pressed	Neutral	Pedal pressed	Stop bucket hoisting motion.
4. Swing	–	–	–	–	
5. Releasing material	Neutral	Pedal released (Return)	Neutral	Pedal pressed	While swinging, release material and open bucket and keep opening.
6. Swing	–	–	–	–	Move bucket to digging position by swinging.
7. Lowering (Prepare for digging)	Neutral	Half brake or Pedal released	Neutral	Half brake or Pedal released	Lower bucket with half brake. Take care not to twist rope.

* Even brake pedal is pressed, hoisting motion is possible.

The above is one example of clamshell work.
According to the work condition, combination work is possible such as swinging with hoisting bucket and releasing material.

Reference Only

2.6 HANDLING OF HYDRAULIC TAGLINE (OPTION)

SPECIFICATION

Relief pressure	13.7 MPa (140 kgf/cm^2)
Wire rope type	FC 6 W (19) C/O
Breaking strength	57.9 kN (5.91 tf)
Wire rope dia.	Φ10 mm
Wire rope length	45 m
Wire rope tension	1.67 kN (170 kgf)

1. Stop the engine, and set the tagline tension adjusting trimmer to the lowest setting (fully turn to the left).

2. Remove the lock bolt from the drum flange and lock the bolt with nut.

3. Reeve the wire rope end through the outside of the drum flange, and fix it with a clamp.

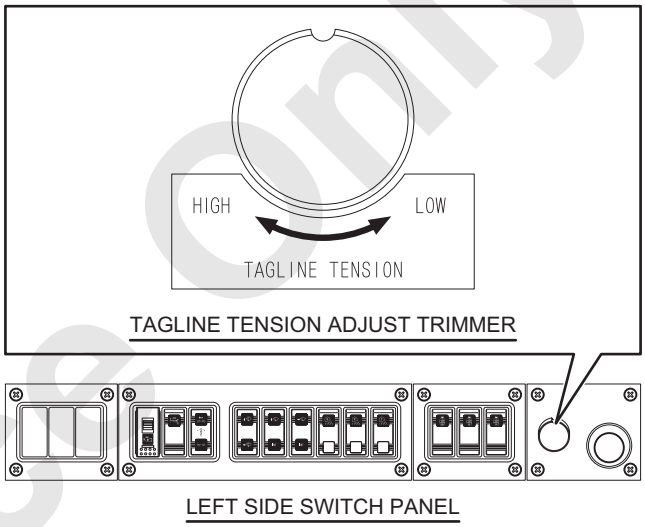

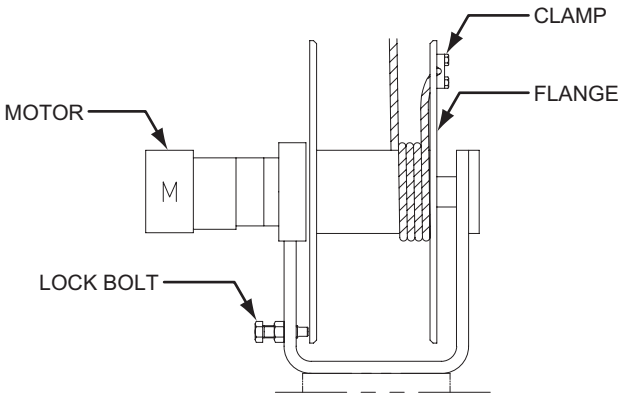

Reference Only

4. Set the other end of the wire rope to the bucket via the guide sheave.

5. Confirm that the tagline tension adjusting trimmer is at the lowest setting (fully turned to the left), and then start and idle the engine.

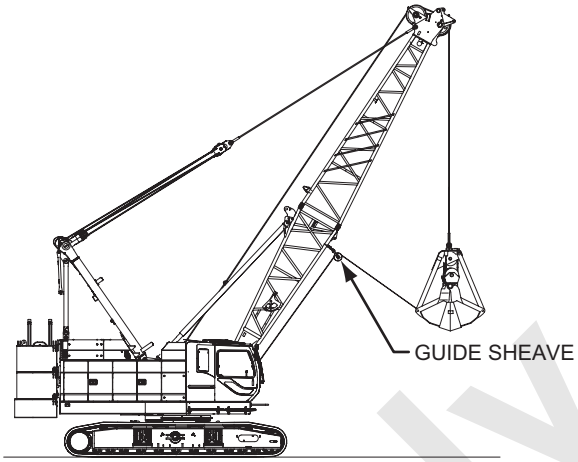

⚠ WARNING

- **Do not stand close to the drum or tagline wire rope since the tagline rope may be suddenly tensioned or slackened when starting or stopping the engine.**
  Failure to observe this precaution may result in a serious injuries or loss of life.
- **Before starting the engine, ensure to turn the tagline tension adjust trimmer to the minimum tension (turn counterclockwise fully) and then start the engine.**
  Failure to observe this precaution may result in a serious injury.

6. To wind up the rope on the drum, turn the tagline adjusting knob trimmer somewhat to the higher setting, while tensioning the wire rope.

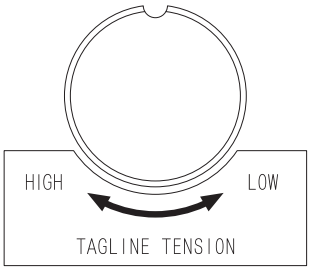

TAGLINE TENSION ADJUST TRIMMER

⚠ WARNING

When the tag line rope is slacken, the winding motion suddenly starts by operating the tension adjusting switch.
Keep clear of the drum and tag line rope.
Make sure to turn the adjusting switch to the minimum tension position (turn counterclockwise fully) when you come close to the drum and tag line rope.
Failure to observe this precaution may result in a serious injury.

7. Adjust the wire rope tension with the tagline adjusting knob trimmer carefully.

Turn right (Clockwise)	Tagline rope tension becomes high.
Turn left (Counterclockwise)	Tagline rope tension becomes low.

Reference Only

8. Turn the flow adjusting knob in case of winding speed needs to be changed.
   Remove the swing motor cover to access the adjusting knob.

Turn right (Clockwise)	Close the valve and oil flow decrease thus winding speed becomes decrease.
Turn left (Counterclockwise)	Open the valve and oil flow increase thus winding speed becomes increase.

* At the time of shipment, the flow adjusting handle set up at fully counterclockwise position (high speed side).

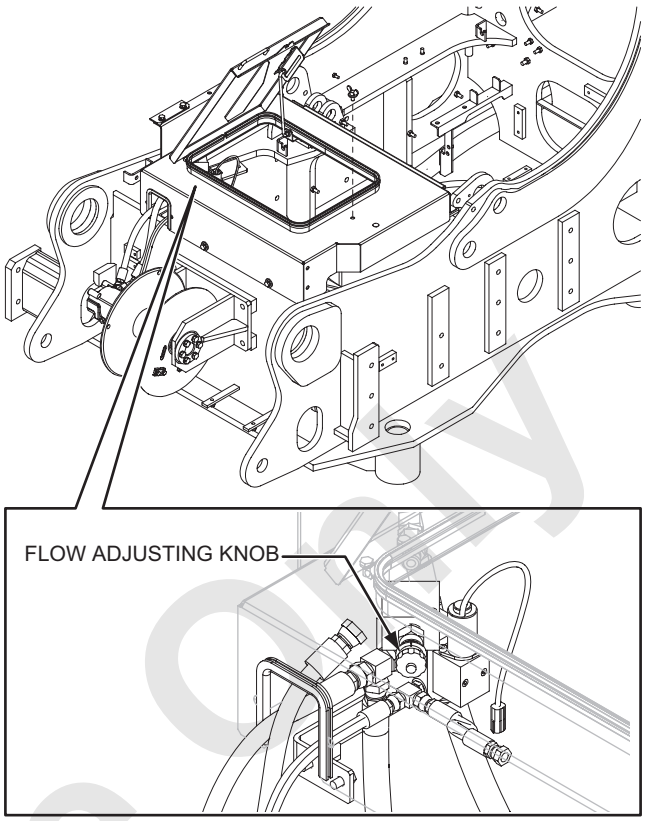

Note

When not using the tagline : Fully wind up the wire rope on the drum and secure the wire rope end and set the tension adjusting trimmer to the minimum setting (fully turn to the left).
Secure the drum flange with the lock bolt.

Reference Only

2.7 HANDLING OF VIBRO HAMMER

1. Cautions when using

(1) Be sure to use a vibro hammer within the rated load.
Total load indicated below must be within the crane rated load.

When driving a pile	Hook weight + Pile weight + Vibro hammer weight
When extracting a pile	Hook weight + Pile weight + Vibro hammer weight + Centrifugal force (Vibratory force) of vibro hammer × 1/4

(2) Use of lifting wire rope
Place a lifting wire rope between hock and vibro hammer so that the vibratory force of the vibro hammer is not transmitted directly to the hook.

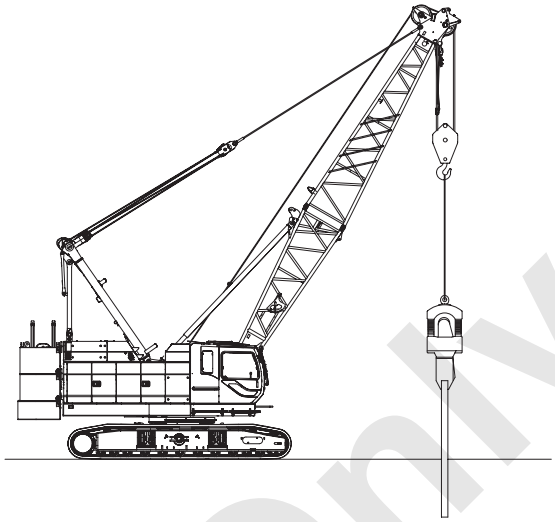

2. Cautions when working

⚠ CAUTION

Do not turn the free fall speed select switch to speed increase side in vibro hammer work.
Otherwise the hoist rope may cause rough spooling.

(1) When starting operation
Place the vibro hammer on the head of the pile, and start with the winch wire rope loosened.

Reference Only

(2) While operating

⚠ CAUTION

If the buffer spring is compressed completely, vibration of the vibro hammer would be transmitted directly to the boom through the wire rope and hook and damage may be caused.

Adjust the hook lowering speed so that the buffer springs is not tight compressed.
Do not operate the vibro hammer without a pile or pile lifted in the air.

⚠ DANGER

While extracting the pile with the vibro and hoisting the load to the extent that the machine rear is lifted up intended to extract the pile with the machine rear lowering reaction may lead to severe impact to the various portion of the machine.
Never attempt to operate such overload work in the vibro work.
Failure to observe this precaution may result in a serious accident.

(3) When stopping operation
In order to minimize resonance generated when stopping, place the vibro hammer on the head of the pile, and stop operation.

Reference Only

3. Check and maintenance

Since larger loads and vibrations are generated repeatedly in a short time in vibro hammer operation and damage to the boom, hook, and frame etc. and looseness of screws are likely to occur.
Be sure to check carefully before and after operation.
If any abnormality is found, immediately repair or replace.
Consult the authorized Manitowoc distributor for disassembly inspection of the hook (Dye penetrant check).
Check for looseness or missing of the counterweight nuts every 5 months.

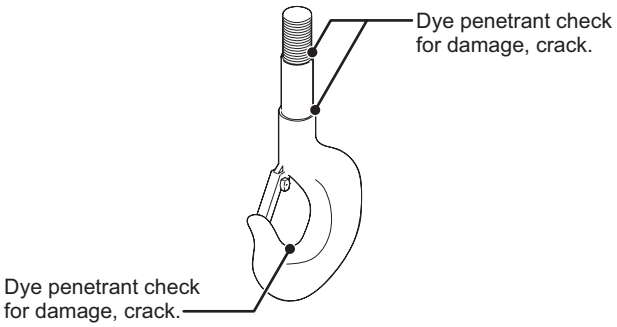

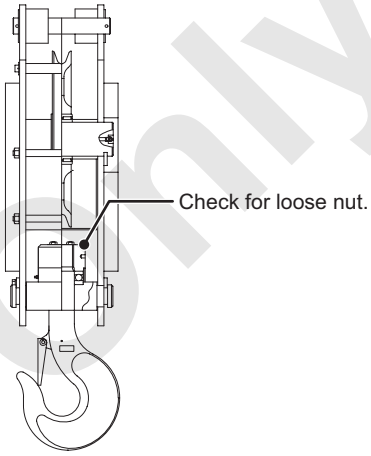

CAUTION

The warranty does not cover any damage to the equipment caused by failure to observe the operating instructions and cautions described.

Reference Only

2.8 OPERATION IN WEATHER CHANGE AND SPECIAL CIRCUMSTANCE

This article explains countermeasures in operation when strong wind, lightning, electric shock or radio wave interference occurs.

2.8.1 CAUTION AGAINST WIND

DANGER

Lifting load swinging due to strong wind may lead to serious accident such as overturn of the machine.
Strictly observe the following precautions to prevent accident.
Failure to observe these precautions may lead to a serious accident, injury or loss of life.

INFLUENCE OF WIND

Influence of the wind on the machine becomes larger in proportion to the size of a lifted load, lifting height, and boom length.
Utmost care is necessary for operation.

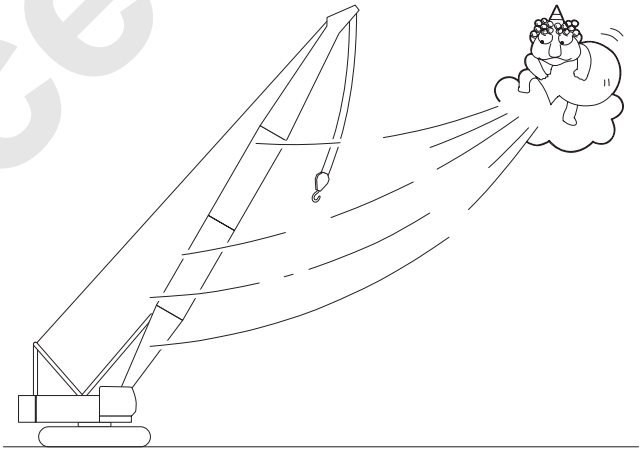

CAUTIONS FOR WIND

1. When performing crane operation in strong wind, utmost cautions are required according to the wind speed, machine condition and working environment.

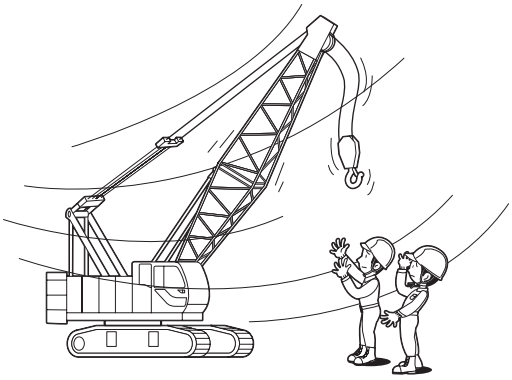

Reference Only

2. Especially following conditions are very dangerous, so, utmost care is necessary for operation.

(1) When lifting a load of with large surface area, against which the wind blows hard, the wind could cause the overturn of the machine and damage to the boom.
(2) The wind could also blow the load against the boom, and could cause damage.
(3) When the boom is fully raised without a load, the wind could blow the boom backward resulting in an overturn of the machine.

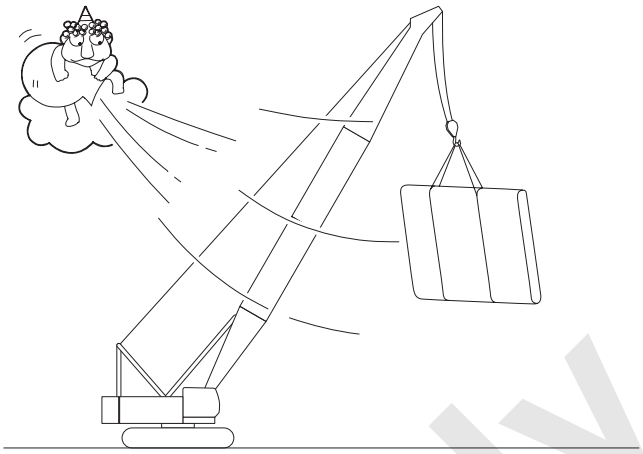

3. The wind speed is different on the ground than in the high air.
   It is also different on open area and populated area.
   Always consider these conditions and take proper measures to meet the situation.
   The wind speed mentioned here means the instantaneous wind speed.

   When the wind speed exceeds 9.8 m/s (22 MPH) stop the work.

METHOD OF WIND SPEED MEASUREMENT

1. If an instantaneous anemometer is provided in the machine, measure the wind speed with the anemometer provided.

2. If an instantaneous anemometer is not provided in the machine, the wind speed given by a weather report can be converted to the instantaneous wind speed based on convention table in next page.

3. The instantaneous wind speed can be approximated by the Beaufort chart in next page. The position where the wind works against the machine is the height above the ground as shown right figures.

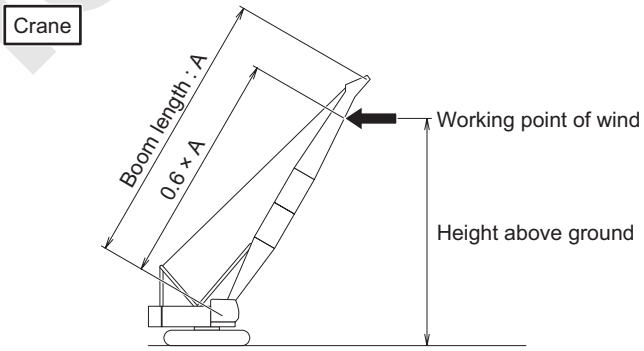

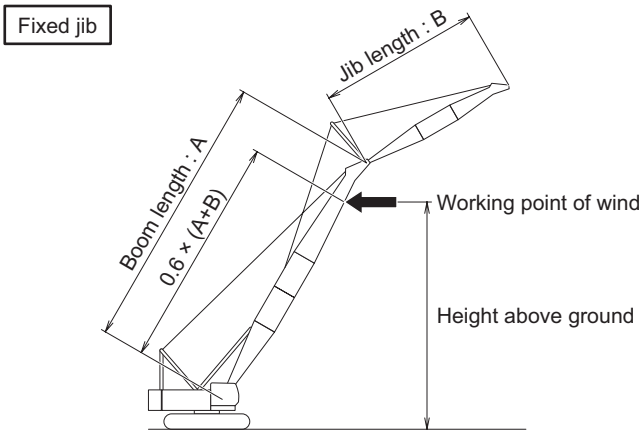

Reference Only

Wind speed in the weather report is average wind speed in 10 minutes.
This must be converted into instantaneous wind speed.

CONVERSION TABLE OF WIND SPEED

Unit : m/s (MPH)

Height above ground : m (ft.)	Wind speed 3 m/s (6.7 MPH)				Wind speed 5 m/s (11.2 MPH)				Wind speed 8 m/s (17.9 MPH)				Wind speed 10 m/s (22.4 MPH)			
	Flat area		City area		Flat area		City area		Flat area		City area		Flat area		City area	
	Av.	Inst.	Av.	Inst.	Av.	Inst.	Av.	Inst.	Av.	Inst.	Av.	Inst.	Av.	Inst.	Av.	Inst.
5 (17)	2.7 (6.0)	9.8 (21.9)	2.5 (5.6)	10.0 (22.4)	4.5 (10.0)	11.7 (26.2)	4.2 (9.4)	11.4 (25.5)	7.1 (15.9)	14.5 (32.4)	6.7 (15.0)	14.0 (31.3)	8.9 (19.9)	16.3 (36.5)	8.4 (18.8)	15.8 (35.3)
10 (33)	3.0 (6.7)	10.2 (22.8)	3.0 (6.7)	10.2 (22.8)	5.0 (11.2)	12.3 (27.5)	5.0 (11.2)	12.3 (27.5)	8.0 (17.9)	15.4 (34.4)	8.0 (17.9)	15.4 (34.4)	10.0 (22.4)	17.5 (39.1)	10.0 (22.4)	17.5 (39.1)
15 (50)	3.2 (7.2)	10.4 (23.3)	3.3 (7.4)	10.5 (23.5)	5.4 (12.1)	12.7 (28.4)	5.6 (12.5)	12.9 (28.9)	8.6 (19.2)	16.0 (35.8)	8.9 (19.9)	16.3 (36.5)	10.7 (23.9)	18.2 (40.7)	11.1 (24.8)	18.7 (41.8)
20 (66)	3.4 (7.6)	10.5 (23.5)	3.6 (8.0)	10.8 (24.2)	5.6 (12.5)	12.9 (28.9)	6.0 (13.4)	13.3 (29.8)	9.0 (20.1)	16.5 (36.9)	9.5 (21.3)	17.0 (38.0)	11.2 (25.0)	18.8 (42.1)	11.9 (26.6)	19.5 (43.6)
25 (82)	3.5 (7.8)	10.7 (23.9)	3.8 (8.5)	11.0 (24.6)	5.9 (13.2)	13.2 (29.5)	6.3 (14.1)	13.6 (30.4)	9.4 (21.0)	16.9 (37.8)	10.1 (22.6)	17.6 (39.4)	11.7 (26.2)	19.3 (43.2)	12.6 (28.2)	20.2 (45.2)
30 (99)	3.6 (8.0)	10.8 (24.2)	4.0 (8.9)	11.2 (25.0)	6.0 (13.4)	13.3 (29.8)	6.6 (14.8)	13.9 (31.1)	9.6 (21.5)	17.1 (38.3)	10.6 (23.7)	18.1 (40.5)	12.0 (26.8)	19.6 (43.8)	13.2 (29.5)	20.9 (46.8)
40 (132)	3.8 (8.5)	11.0 (24.6)	4.2 (9.4)	11.5 (25.7)	6.3 (14.1)	13.6 (30.4)	7.1 (15.9)	14.5 (32.4)	10.1 (22.6)	17.6 (39.4)	11.3 (25.3)	18.9 (42.3)	12.6 (28.2)	20.2 (45.2)	14.1 (31.5)	21.8 (48.8)
50 (164)	3.9 (8.7)	11.1 (24.8)	4.5 (10.0)	11.7 (26.2)	6.6 (14.8)	13.9 (31.1)	7.5 (16.8)	14.9 (33.3)	10.5 (23.5)	18.0 (40.3)	12.0 (26.8)	19.6 (43.8)	13.1 (29.3)	20.8 (46.5)	15.0 (33.6)	22.8 (51.0)
75 (260)	4.2 (9.4)	11.4 (25.5)	5.0 (11.2)	12.2 (27.3)	7.0 (15.7)	14.4 (32.2)	8.3 (18.6)	15.7 (35.1)	11.2 (25.0)	18.8 (42.1)	13.2 (29.5)	20.9 (46.8)	14.0 (31.3)	21.7 (48.5)	16.5 (36.9)	24.8 (55.5)
100 (328)	4.4 (9.8)	11.6 (25.9)	5.3 (11.9)	12.6 (28.2)	7.4 (16.6)	14.8 (33.1)	8.9 (19.9)	16.3 (36.5)	11.8 (26.4)	19.4 (43.4)	14.2 (31.8)	21.9 (49.0)	14.7 (32.9)	22.4 (50.1)	17.8 (39.8)	26.7 (59.7)

* Wind speed may be higher than the above value near tall buildings.

BEAUFORT WIND SCALE CHART

Approximate wind speed at 10 m (33 ft) height from the open and flat ground : m/s (MPH)	Details
Less than 0.3 (0.7)	Calm, smoke rises vertically.
0.3 (0.7) to less than 1.6 (3.6)	Smoke drift indicates wind direction, still wind vanes.
1.6 (3.6) to less than 3.4 (7.6)	Wind felt on face, leaves rustle, vanes begin to move.
3.4 (7.6) to less than 5.5 (12.3)	Leaves and small twigs constantly moving, light flags extended.
5.5 (12.3) to less than 8.0 (17.9)	Dust, leaves, and loose paper lifted, twigs move.
8.0 (17.9) to less than 10.8 (24.2)	Many whitecaps, leaf in small trees begin to sway.
10.8 (24.2) to less than 13.9 (31.1)	Larger tree branches moving, whistling in wires, hard to walk under an umbrella.
13.9 (31.1) to less than 17.2 (38.5)	Whole trees moving, resistance felt walking against wind.
17.2 (38.5) to less than 20.8 (46.5)	Twigs broken, cannot walk against wind.
20.8 (46.5) to less than 24.5 (54.8)	Slight structural damage occurs, chimney broken, slate blows off roofs.
24.5 (54.8) to less than 28.5 (63.8)	Seldom experienced on land, trees broken or uprooted, and considerable structural damage.
28.5 (63.8) to less than 32.7 (73.1)	Scarcely experienced, damages occur in wide areas.
32.7 (73.1) or more	

Reference Only

COUNTERMEASURE AGAINST WIND (CRANE)

Take the following actions based on wind speed at work area.
Take the same action in case the strong wind is expected after work.
The wind speed here means “Instantaneous wind speed”.

1. **In case the wind speed is 9.8 to 15.6 m/s (22 to 35 MPH)**

   Stop the work and take the following actions.

(1) Lower the load on the ground and remove it from the hook.
(2) Set the boom angle to approx. 60 degrees.
(3) Swing the machine to receive the wind at the counterweight side.
    (Receive the wind at the back face of the boom.)
(4) Lock the winches, apply swing brake, and stop the engine.

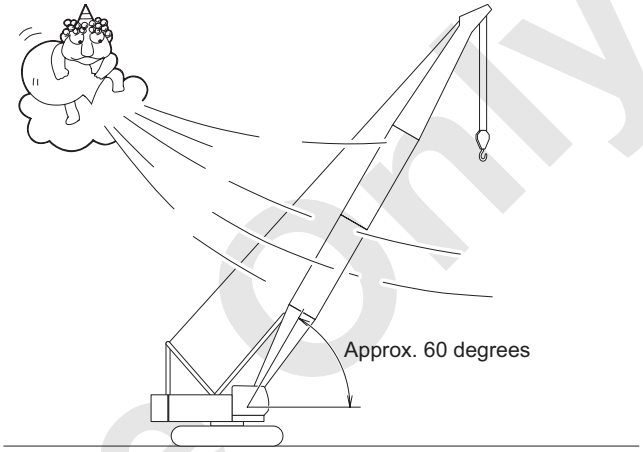

Reference Only

2. In case the wind speed is 15.6 to 30 m/s (35 to 67 MPH)

Stop the work and take the following actions.
(Prepare the anchor weight by referring with the following table)

- In case the attachment can be lowered on the ground.

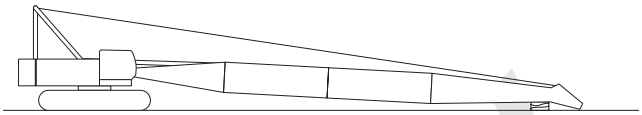

(1) Lower the load on the ground and remove it from the hook.
(2) Lower the boom on the ground.
If swing is necessary, swing with approx. 60 degrees boom angle.
(3) Lock the winches, apply swing brake, and stop the engine.

- In case the attachment can't be lowered on the ground.

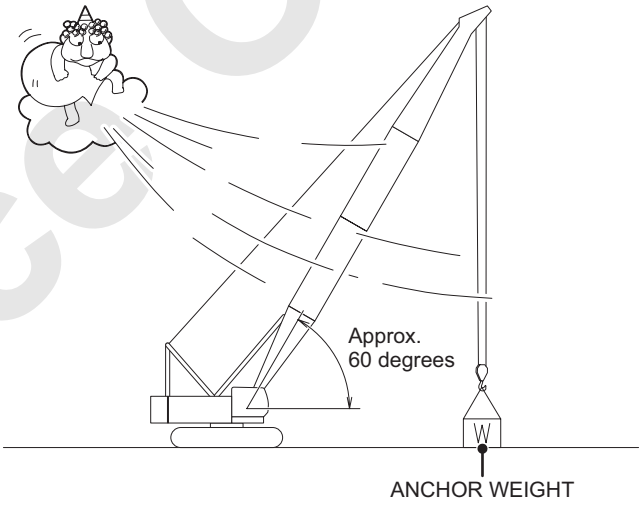

(1) Lower the load on the ground and remove it from the hook.
(2) Set the boom angle to approx. 60 degrees.
(3) Swing the machine to receive the wind at the counterweight side.
(Receive the wind at the back face of the boom.)
(4) Connect the anchor weight to the hook and give the tension to hoist rope with the anchor weight kept remains on the ground.
(5) Lock the winches, apply swing brake, and stop the engine.

ANCHOR WEIGHT (CRANE)

Boom length : m (ft.)	Boom angle : degrees	Anchor weight : t (lbs)
12.2 (40)	60	–
15.2 to 27.4 (50 to 90)		0.9 (2,000)
30.5 to 54.9 (100 to 180)		4.2 (9,300)
57.9 to 61.0 (190 to 200)		5.3 (11,700)

Reference Only

3. In case wind speed is higher than 30.0 m/s (67 MPH).

Ensure to lower the attachment on the ground by following procedure.

(1) Lower the load on the ground and remove it from the hook.
(2) Lower the boom on the ground.
If swing is necessary, swing with approx. 60 degrees boom angle.
(3) Lock the winches, apply swing brake, and stop the engine.

Reference Only

4. Wind speed effect graph (crane)

This shows the wind speed increase when raising the boom.
Wind effect becomes larger with longer boom length or higher boom angle.

CRANE

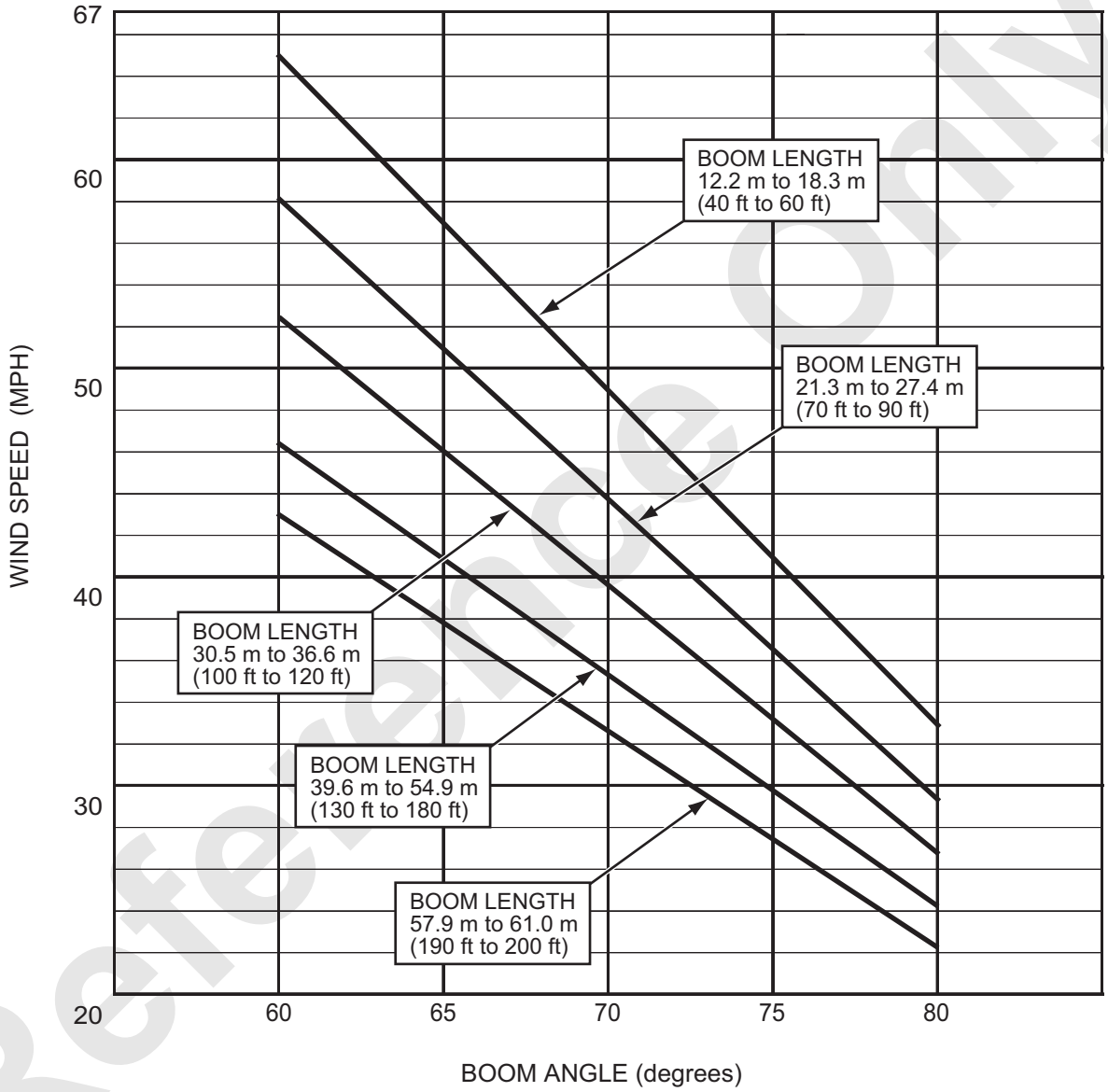

Reference Only

COUNTERMEASURE AGAINST WIND (WITH JIB)

Take the following actions based on wind speed at work area.
Take the same action in case the strong wind is expected after work.
The wind speed here means “Instantaneous wind speed”.

1. **In case the wind speed is 9.8 to 15.6 m/s (22 to 35 MPH)**

   Stop the work and take the following actions.

(1) Lower the load on the ground and remove it from the hook.
(2) Set the boom angle to approx. 60 degrees.
(3) Swing the machine to receive the wind at the counterweight side.
    (Receive the wind at the back face of the boom.)
(4) Lock the winches, apply swing brake, and stop the engine.

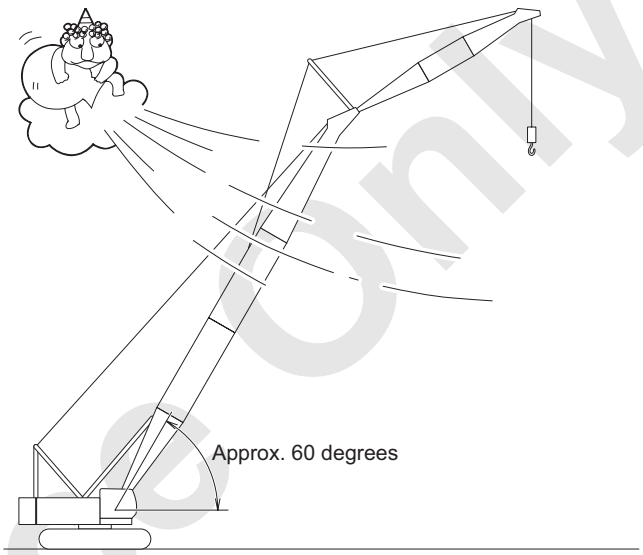

Reference Only

2. In case the wind speed is 15.6 to 30 m/s (35 to 67 MPH)

Stop the work and take the following actions.
(Prepare the anchor weight by referring with the following table)

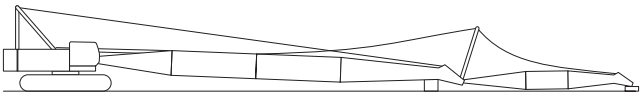

- In case the attachment can be lowered on the ground.

(1) Lower the load on the ground and remove it from the hook.
(2) Lower the boom on the ground.
If swing is necessary, swing with approx. 60 degrees boom angle.
(3) Lock the winches, apply swing brake, and stop the engine.

- In case the attachment can't be lowered on the ground.

(1) Lower the load on the ground and remove it from the hook.
(2) Set the boom angle to approx. 60 degrees.
(3) Swing the machine to receive the wind at the counterweight side.
(Receive the wind at the back face of the boom.)
(4) Connect the anchor weight to the hook and give the tension to hoist rope with the anchor weight kept remains on the ground.
(5) Lock the winches, apply swing brake, and stop the engine.

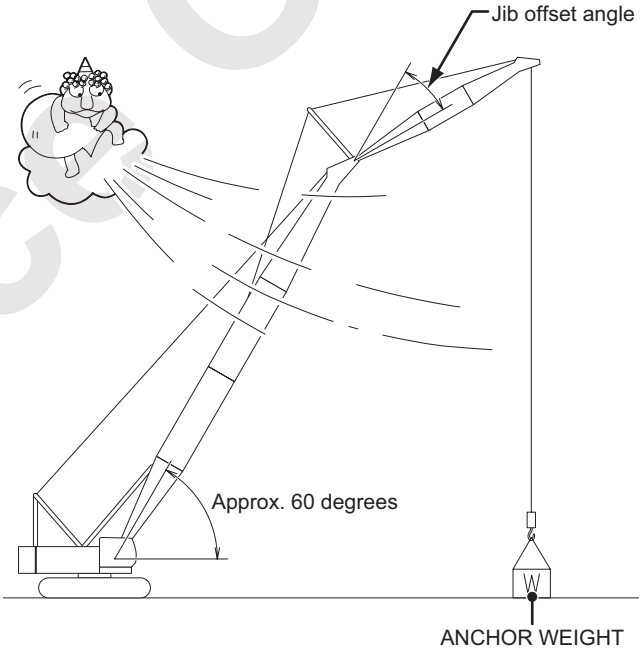

ANCHOR WEIGHT (WITH JIB)

Jib length : m (ft.)	Boom length : m (ft.)	Boom angle : degrees	Anchor weight : t (lbs)	
			Offset angle 10 degrees	Offset angle 30 degrees
9.1 to 12.2 (30 to 40)	24.4 to 36.6 (80 to 120)	60 degrees	1.8 (4,000)	1.3 (2,900)
	39.6 to 45.7 (130 to 150)		2.8 (6,200)	2.2 (4,900)
	48.8 to 51.8 (160 to 180)		4.8 (10,600)	3.7 (8,200)
15.2 to 18.3 (50 to 60)	24.4 to 42.7 (80 to 140)		2.4 (5,300)	1.6 (3,600)
	45.7 to 51.8 (150 to 170)		4.8 (10,600)	3.2 (7,100)

Reference Only

3. In case wind speed is higher than 30.0 m/s (67 MPH).

Ensure to lower the attachment on the ground by following procedure.

(1) Lower the load on the ground and remove it from the hook.
(2) Lower the boom on the ground.
If swing is necessary, swing with approx. 60 degrees boom angle.
(3) Lock the winches, apply swing brake, and stop the engine.

Reference Only

4. Wind speed effect graph (with jib)

This shows the wind speed increase when raising the boom.
Wind effect becomes larger with longer boom length or larger boom angle.

9.1 m (30 ft.) and 12.2 m (40 ft.) jib

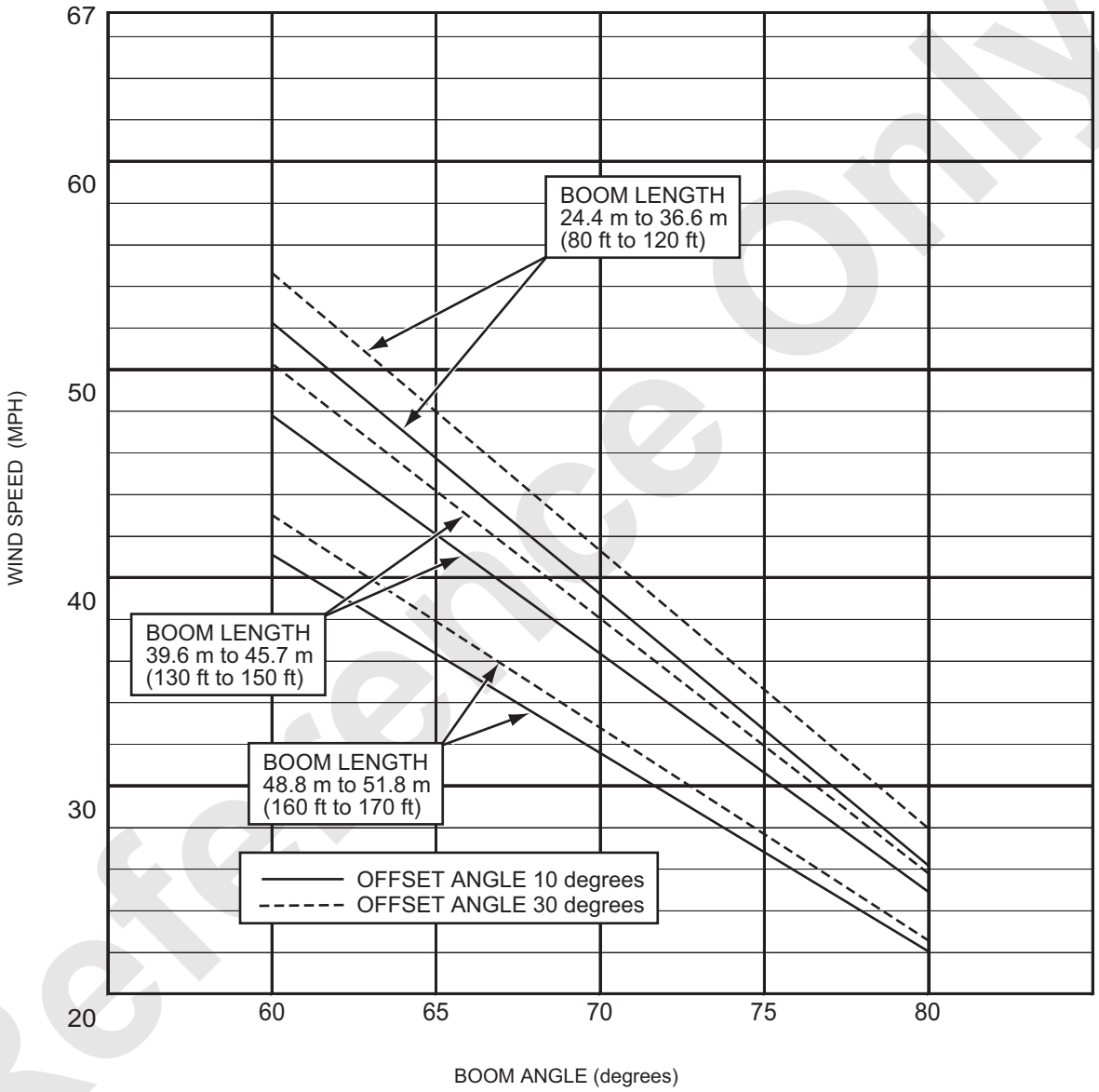

Reference Only

15.2 m (50 ft.) and 18.3 m (60 ft.) jib

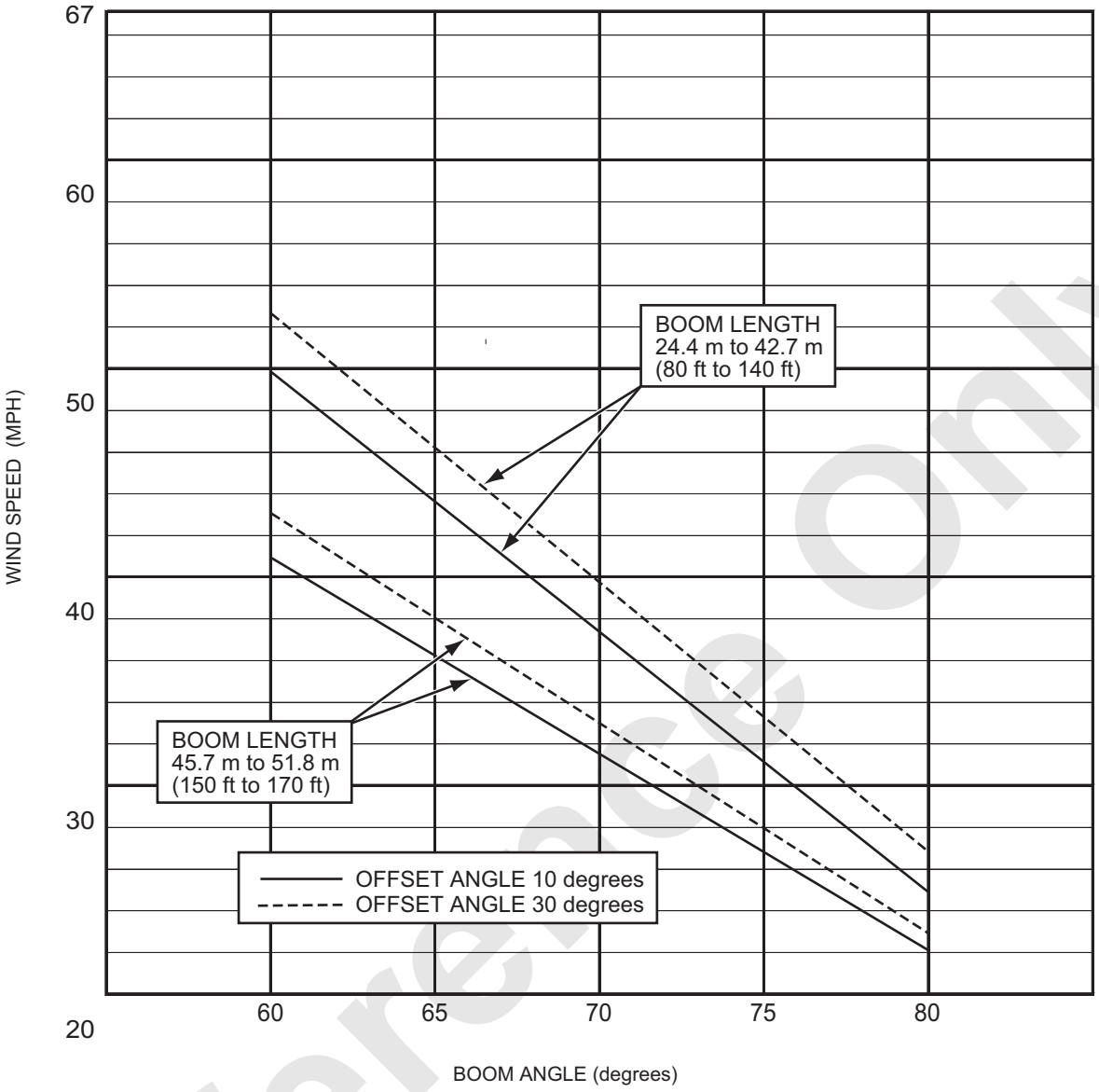

Reference Only

2.8.2 CAUTION AGAINST ELECTRIC SHOCK

If the machine or load comes close to the power lines, danger of electric shock becomes possible.
Follow local rules and regulations.

⚠ DANGER

There is a possibility of serious accident such as injuries or loss of life of personnel when the crane boom or lifting load comes close to or contact with power line.
Furthermore, an accident can be extended to :

- **Power supply cut to homes and factories.**
- **Power supply cut to hospital affecting life of patients.**
- **Affect to the traffics such as power cut to the traffic signal etc.**

These may cause secondary accident.
Whenever crane work is to be done near the power line, strictly observe the following measures and to prevent such accident.
Failure to observe these precautions may result in an accident and a serious injury or loss of life.

Reference Only

MEASURE AT WORK

1. Hold a meeting with the power company to understand the dangerous location in advance.

2. Place a signal person and keep safe distance between the machine, lifting load and the power line.
   Refer to the article “1. SAFETY”.

3. If coming close to the power line is unavoidable, advise the power company and obtain the protective insulated tube to prevent electric shock.

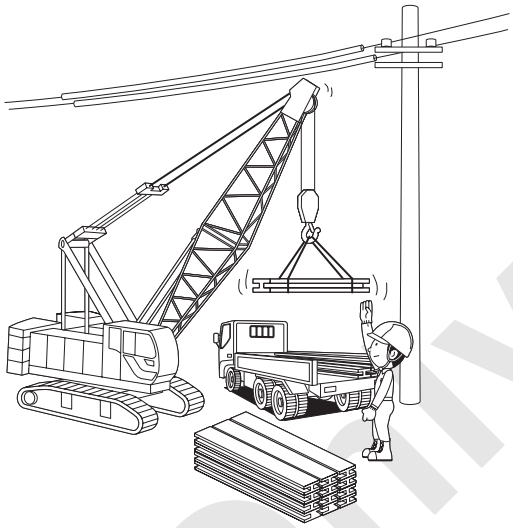

ACTION IN CASE ACCIDENT OCCURS

Should an accident occur, take the following actions immediately to minimize damage.

(1) Advise the nearest power company office.
(2) Operator without getting panic, should remove the boom or lifting load from the power line.
   If removing is not possible, it is safer to stay on the machine.
   Operator would be electrocuted by getting off the machine holding a part of machine.

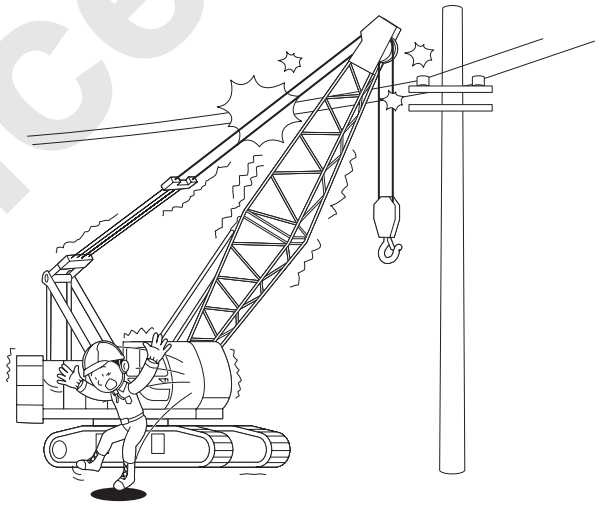

DANGER

While the boom or lifting load is touching the power line, do not get off the machine. If person get off the machine while holding a part of machine, person will be electrocuted.
Never hold any part of machine when get off.
Failure to observe this precaution may result in a serious injury or loss of life.

(3) Should someone be injured, immediately take emergency treatment such as artificial respiration or heart massage.
(4) If the power line is cut, do not allow any person to come close to the loose power lines.
(5) Inspect the machine (specially on load safety device) for proper function before reuse.

Reference Only

2.8.3 CAUTION AGAINST RADIO WAVE INTERFERENCE

If the machine is operated near the radio or TV transmitting station, boom, wire rope or hook may be charged with electricity.
If charged it may lead to the danger such as trouble in slinging to the hook or damage to the safety device.

⚠ CAUTION

When working near the transmitting station's antenna, the boom or wire rope may function as an extra large antenna and may be charged with electricity and the high voltage may be induced at the end of the hook and may be heated.
Touching the hook may cause burns due to the electric shock or heat.
The computer installed on the machine may malfunction.
Take extra care in operating the machine.
Failure to observe these precautions may result in an accident and a serious injury or loss of life.

PREVENTIVE MEASURE

- Use insulating gloves.
- Connect the grounding wire to the hook.
- Wrap around the hook with insulating materials.
- Use nylon rope (belt type) for sling.

* Consult Manitowoc service shop if electrical component installed on the machine is failed.

Reference Only

2.8.4 CAUTION AGAINST LIGHTNING

When the machine is struck by lightning, fatal accident is likely to the operator or surrounding personnel.
Various portion of machine may also be damaged.

1. Take the following actions immediately when the thunder cloud appears and lightning is expected.

(1) Stop the work and lower the lifting load on the ground.
If the boom can be lowered, lower it on the ground.
(2) Engage the brake/lock (hoist, swing) and stop the engine and turn the key to OFF.
(3) Get away from the machine and surrounding area.

2. If the machine was struck by lightning, check the following points.

(1) Is there any burning out or damage?
(2) Do all the electrical devices or load safety devices work properly?
(3) Does each function work properly?

2.8.5 COUNTERMEASURE AGAINST EARTHQUAKE

Earthquake is unpredictable for its time or size.
It is essential to prepare always against earthquake.

1. Preparation against earthquake.
Lower the boom on the ground after completion of daily work.

2. Action when earthquake occurs.
Stop work immediately and stop the machine and turn the engine key to OFF position.
Evacuate to the safety place taking care about fallen materials.

3. Inspect the following points when re-starting the machine.

- Ground condition of the machine placed.
- Damage of the machine.
- Function of the machine.

Do not operate the machine until the damage is repaired.

Reference Only

3. LOAD SAFETY DEVICE

3.1 ARRANGEMENT OF EQUIPMENTS 3-3
3.2 TYPES AND FUNCTIONS OF EQUIPMENT 3-6
3.3 CONNECTING PROCEDURE OF WIRING 3-12
3.3.1 CRANE ATTACHMENT 3-13
3.4 FUNCTION OF MONITOR 3-20
3.5 OPERATING PROCEDURE OF MONITOR 3-21
3.5.1 SETTING OF CRANE CONFIGURATION 3-26
3.5.2 SELECTION OF MAIN/AUXILIARY HOOK SELECTION 3-35
3.5.3 SETTING OF WORK AREA LIMIT VALUE 3-36
3.6 SWING LIMITATION DEVICE (OPTION) 3-41
3.7 LOAD HISTORY (DATA LOGGER) 3-53
3.8 FUNCTION OF GROUND INCLINE INDICATOR (OPTION) 3-54
3.9 WARNING AND AUTO-STOP 3-56
3.9.1 CONTENT OF WARNING AND AUTO-STOP 3-56
3.9.2 CONTENT OF AUTO-STOP 3-57
3.9.3 RELEASING AUTO-STOP 3-58
3.10 INSPECTION 3-64
3.10.1 INSPECTION PROCEDURE WHEN ERECTING THE BOOM AFTER THE ATTACHMENT ASSEMBLY WORK IS COMPLETED 3-64
3.10.2 INSPECTION AFTER ERECTING ATTACHMENT 3-66
3.11 CAUTIONS IN HANDLING LOAD SAFETY DEVICE 3-68
3.12 ERROR CODE DISPLAY AND MESSAGE 3-69
3.13 WARNING CODE LIST AND CONDITION, ACTION 3-82
3.14 CHECKING PROCEDURE OF LOAD SAFETY DEVICE 3-88

Reference Only

Reference Only

3. LOAD SAFETY DEVICE

This machine is provided with various safety devices to operate the machine safely.
The machine conditions are detected with various devices and are controlled with the controller and are displayed with the monitor to prevent damage to the attachment due to overload, overhoist or to prevent overturning of the crane.
Ensure to use this device to operate the crane safely and inspect and maintain the device periodically.
If the device becomes inoperable, repair immediately before restarting the work.

SAFETY DEVICE OF THIS MACHINE

Load safety device
Hook overhoist preventive device (Crane, aux. sheave, jib)
Boom overhoist preventive device (Boom, luffing jib)

DANGER

Never operate the crane with respective auto-stop release switches and its master keys in the "RELEASE" position.
These switches and keys must be used for the case of emergency evacuation when failure of safety device or maintenance purpose.
Failure to observe this precaution may result in a serious accident.

CAUTION

During work bypass key must be kept and be controlled by work responsible person.

Reference Only

⚠ CAUTION

- **The load safety device is important to operate the crane safely.**
  Make sure that the device works properly and use this device surely during work.
  Failure to observe this precaution may result in a serious accident.
- **Do not use the load safety device improperly, released in unsafe way, or maintenance and repair being neglected, machine may be damaged or may serious accident such as overturning.**
  Failure to observe this precaution may result in a serious accident.
- **Even if the load safety device functions correctly, wind influence, ground collapsing or incorrect adjustment of the device may cause machine damage or overturning.**
- **Adequate caution required against electric shock or radio wave interference during work.**
  If there is a possibility of strong wind, earthquake or lightening, stop work immediately.
  Failure to observe this precaution may result in a serious accident.
- **Never adjust the length of hook overhoist weight wire or the limit striker and the angle sensor of load safety device since they are pre-adjusted.**
  Failure to observe this precaution may result in a serious accident.

Reference Only

3.1 ARRANGEMENT OF EQUIPMENTS

The part name and the item number in the figures of arrangement of equipments correspond to the description in the section 3.2.

CRANE

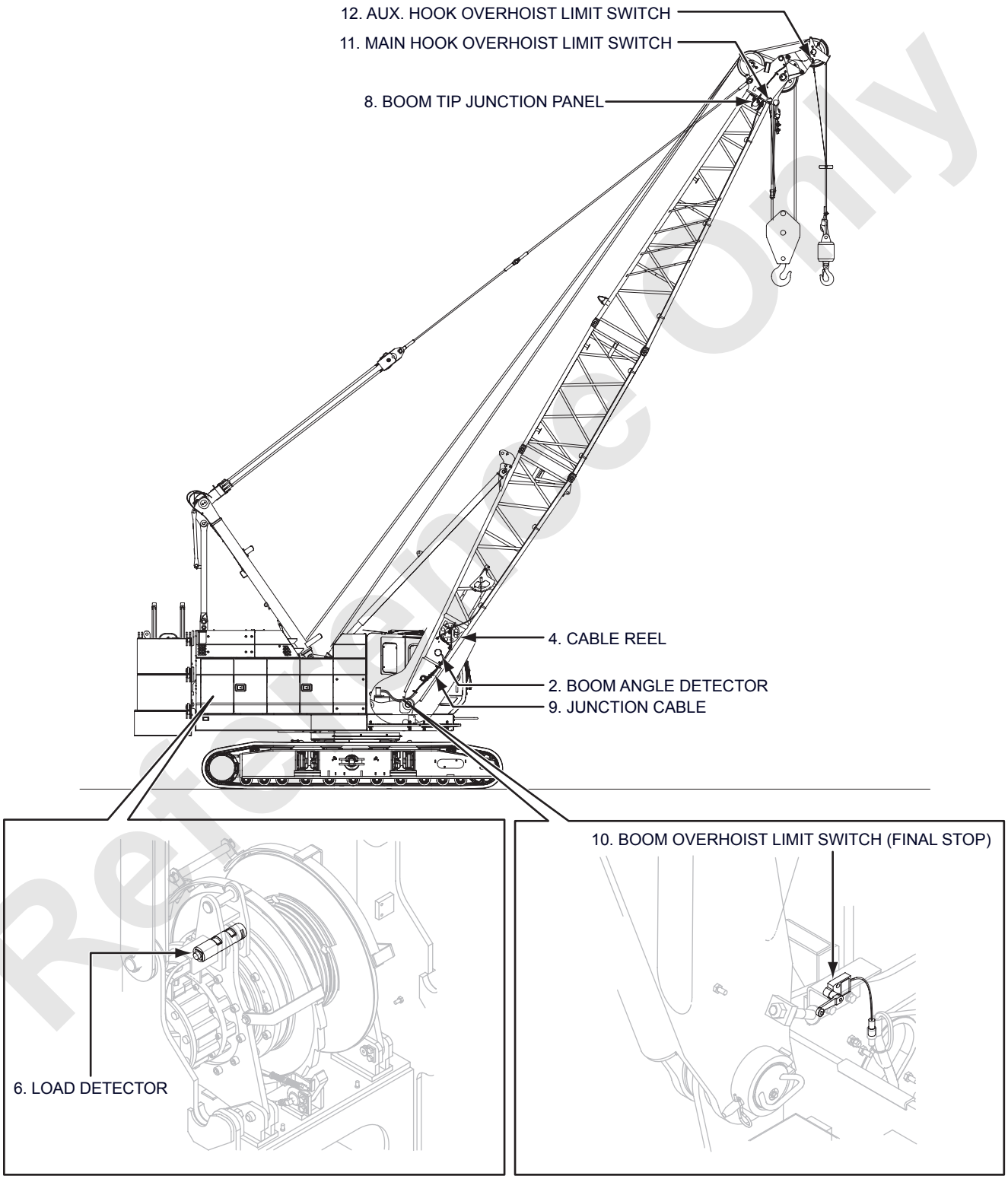

Reference Only

FIXED JIB

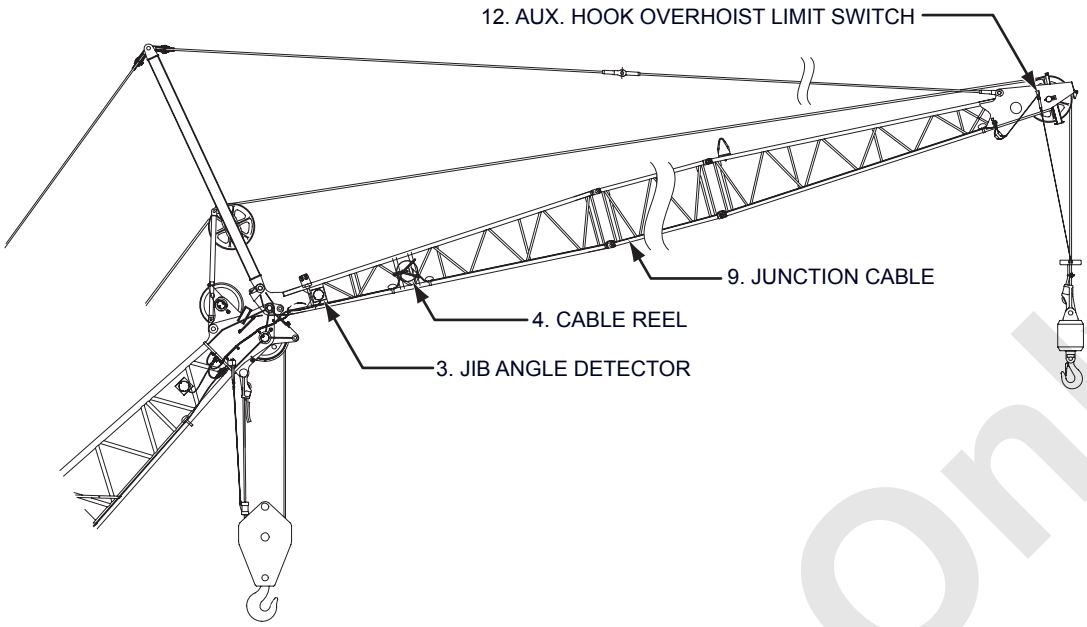

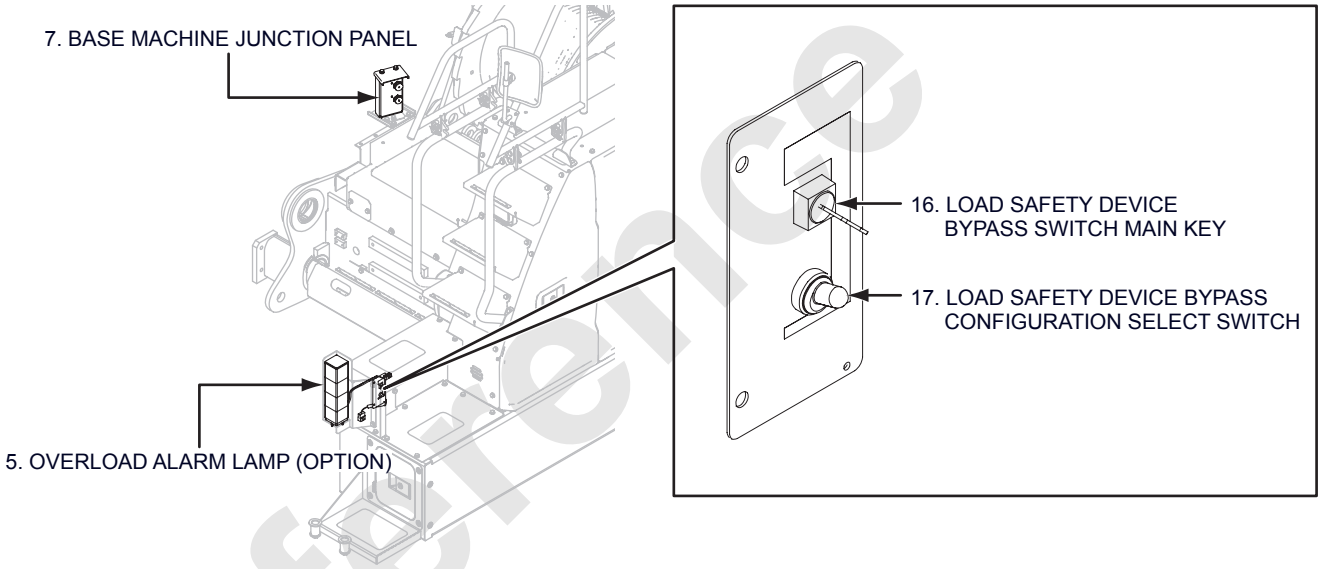

Reference Only

DETAIL OF OPERATOR CAB LEFT SIDE STAND PANEL

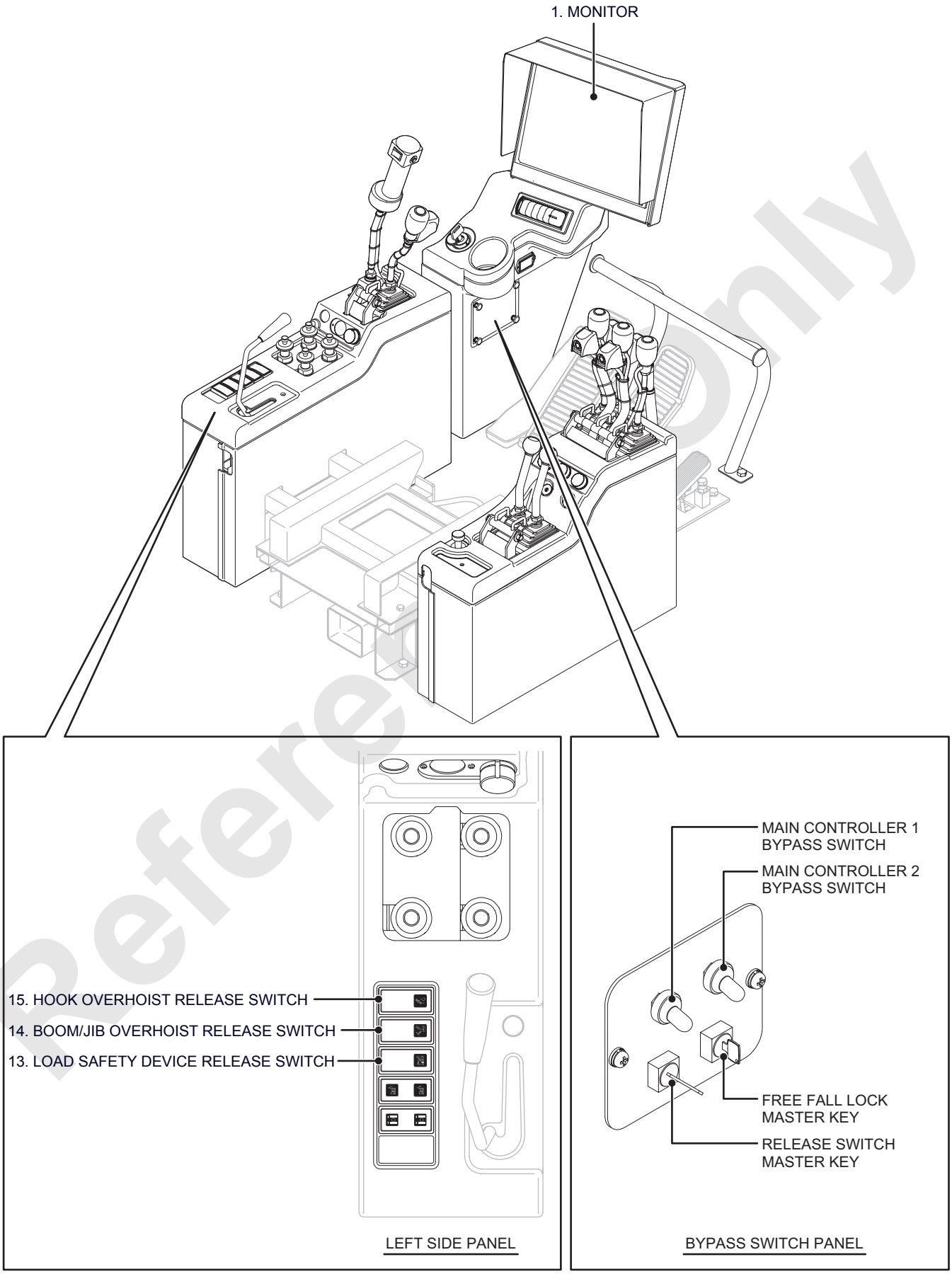

Reference Only

3.2 TYPES AND FUNCTIONS OF EQUIPMENT

1. MONITOR

Indicate the machine condition on the touch panel type monitor, and issues the signal for the alarms and stop as required.

Note

All values in the monitor displays are for reference only.

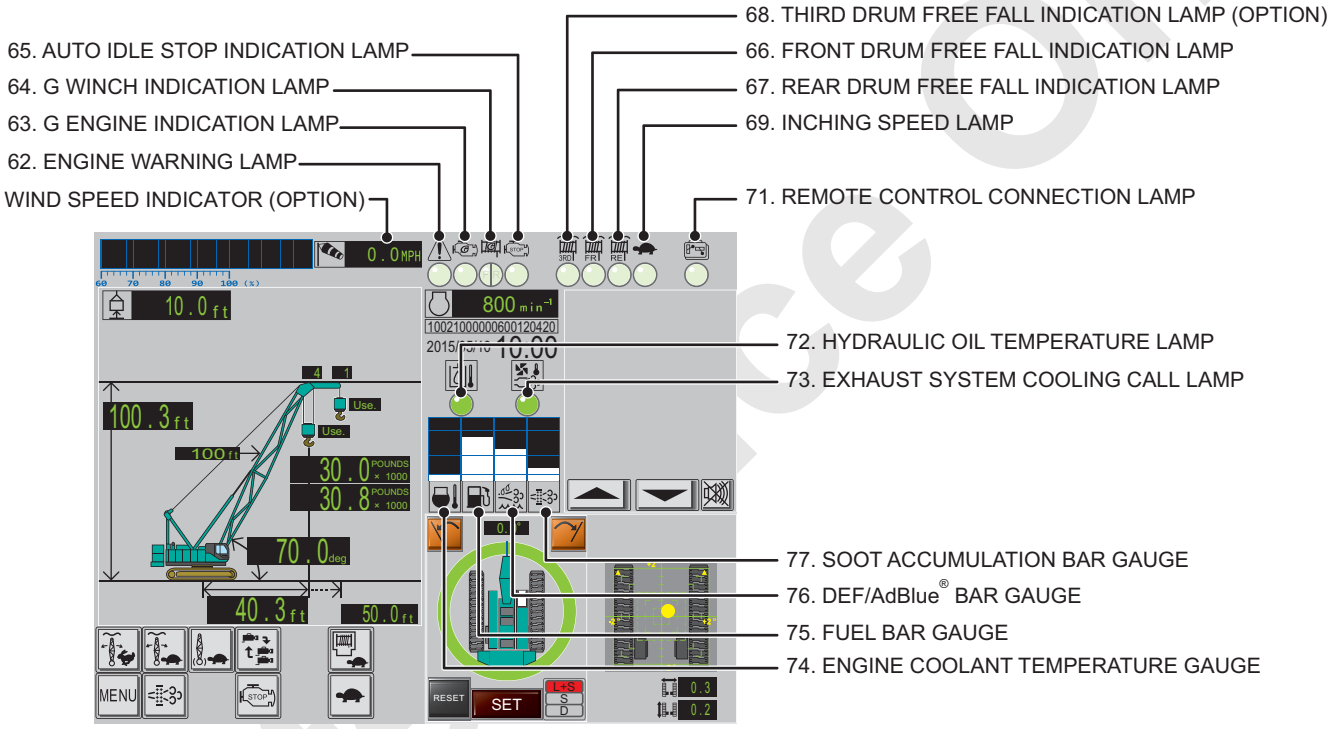

MONITOR SCREEN

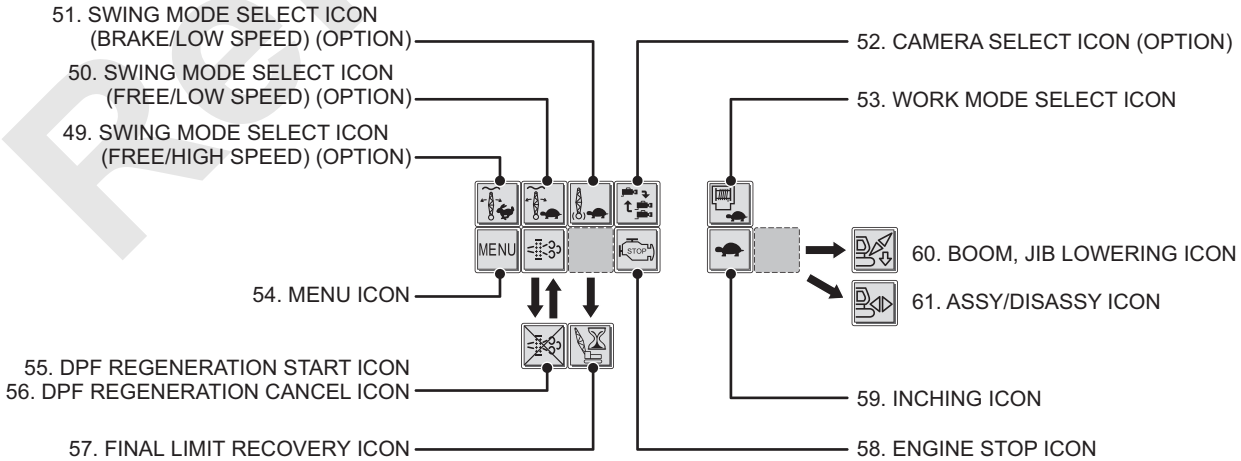

Detail of menu icon

Reference Only

2. BOOM ANGLE DETECTOR
3. JIB ANGLE DETECTOR

This device detects the angle of boom and jib.

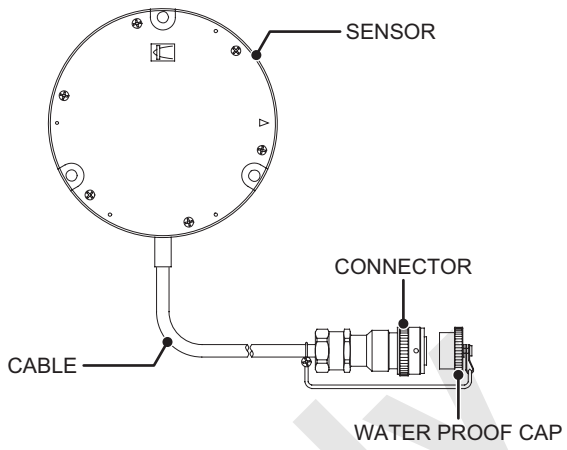

4. CABLE REEL

This is to store electrical cables.

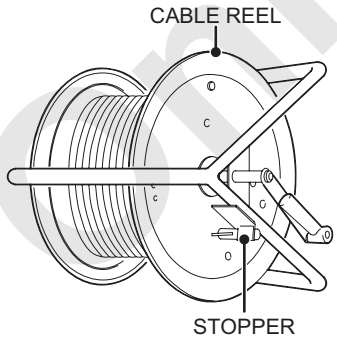

5. OVERLOAD ALARM LAMP (OPTION)

Issue respective warnings and indicates load ratio in operation with 3 color lamps.

CONTENT OF 3 COLOR LAMP INDICATION

Indicated status	Red	Yellow	Green	Buzzer
Load ratio is less than 90%			○	
Load ratio ranges from 90 to 100%		○		○
Load ratio is 100% or more	○			○
Hook overhoist			○	
Boom overhoist (crane)			○	
Assembly configuration (at assembly and disassembly)	○			
While the overload release switch is actuated	○			○

⚠ CAUTION

Do not operate crane while red lamp is ON.
Do not modify the overload alarm lamp circuit.
Failure to observe this precaution may result in a serious accident.

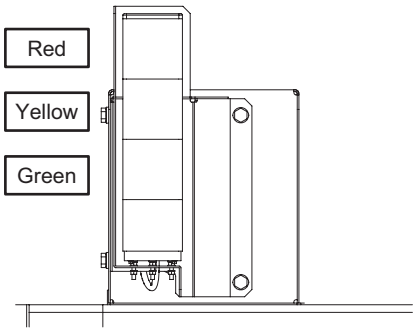

OVERLOAD ALARM LAMP

Reference Only

6. LOAD DETECTOR

This pin detects load.

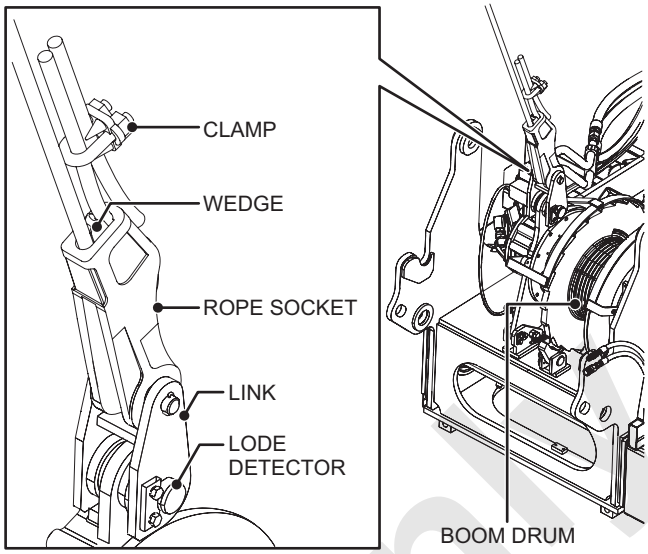

7. BASE MACHINE JUNCTION PANEL

Relay the cables from “CONTROLLER” to “BOOM ANGLE DETECTOR” and “CABLE REEL”.

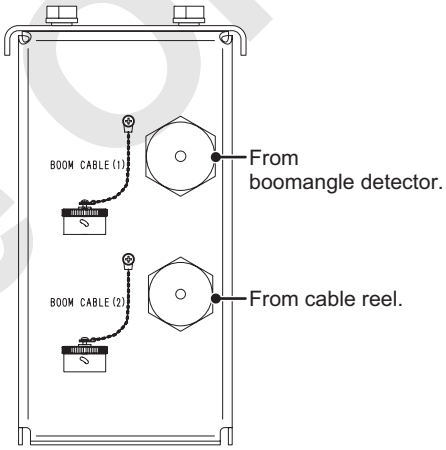

8. BOOM TIP JUNCTION PANEL

Relay the cables from “CABLE REEL” to “JIB ANGLE DETECTOR” (When equipped with fixed jib) and respective hook overhoist limit switches.

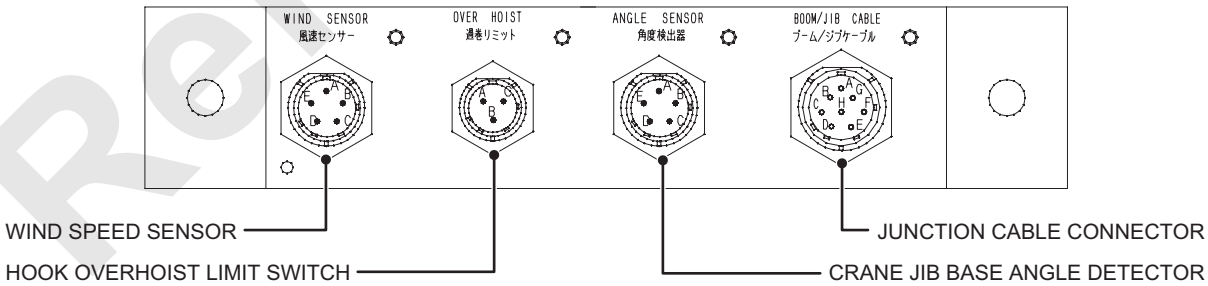

Reference Only

9. JUNCTION CABLE

Relay each electric component.

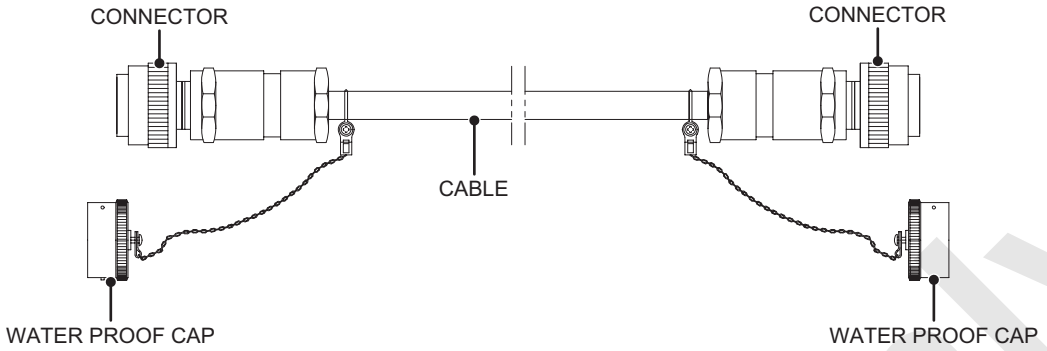

10. BOOM OVERHOIST LIMIT SWITCH (FINAL STOP)

This prevents the boom from overhoisting.
This is the final stop limit switch.
When crane is stopped due to this limit switch actuated, auto-stop can not be released.

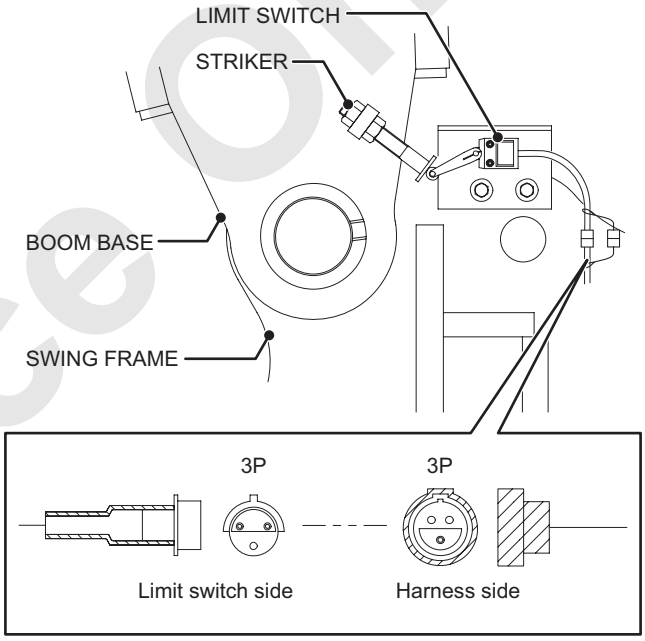

Reference Only

11. MAIN HOOK OVERHOIST LIMIT SWITCH
12. AUX. HOOK OVERHOIST LIMIT SWITCH

These switches prevent the hook from overhoisting.

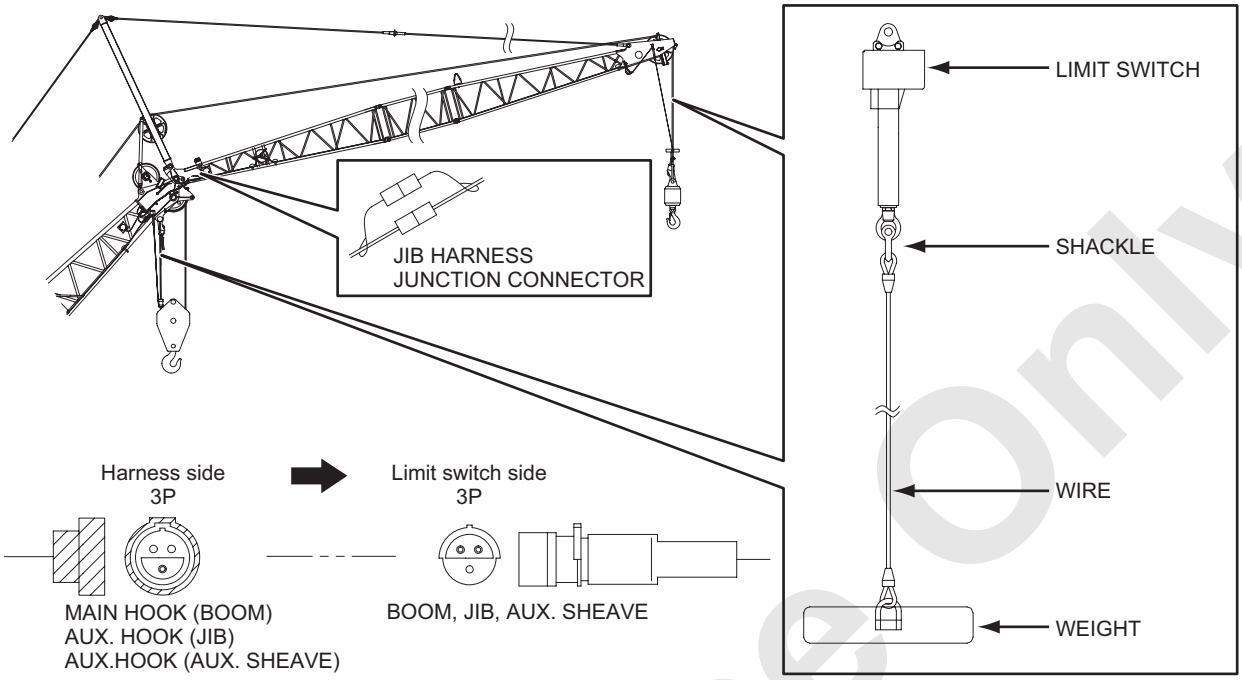

13. LOAD SAFETY DEVICE RELEASE SWITCH
14. BOOM/JIB OVERHOIST RELEASE SWITCH
15. HOOK OVERHOIST RELEASE SWITCH

These switches release auto-stop function.
Refer to the article “3.9.3 RELEASING AUTO-STOP”.

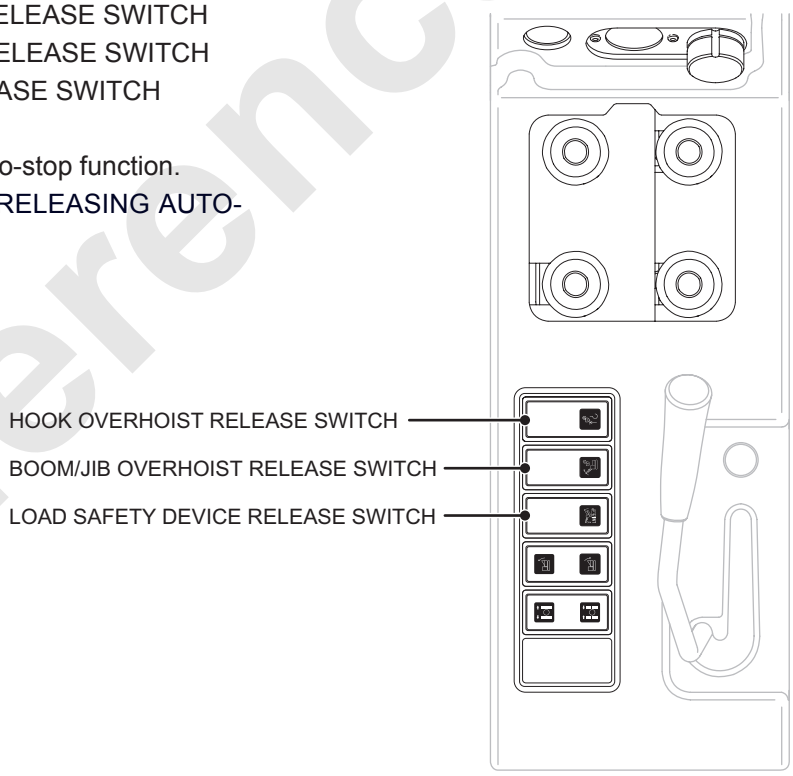

LEFT SIDE PANEL

Reference Only

CONTROLLER (LOAD SAFETY DEVICE) BYPASS SWITCH

This switch is used to release the auto-stop function when the controller (load safety device) becomes inoperable.

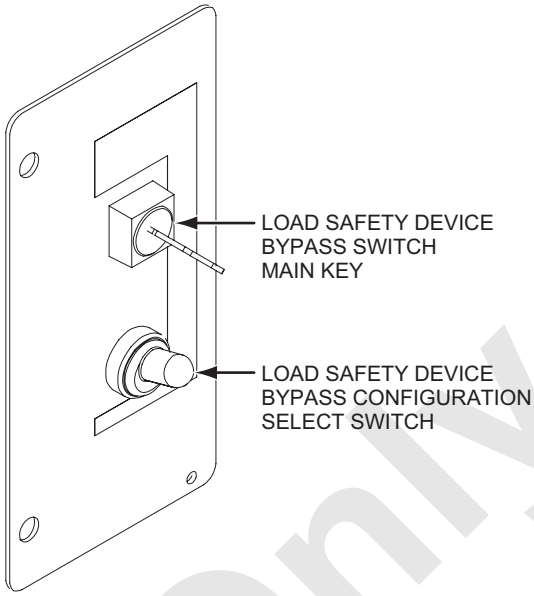

DANGER

When the controller is functioning properly, bypass function will not work even when the bypass switch is released.
During the crane work with using the bypass switch, indication, warning or auto-stop does not work.
(Auto-stop function by overhoist preventive device works.)
Repair or replace the controller immediately.

16. LOAD SAFETY DEVICE BYPASS SWITCH MAIN KEY

    In case of load safety device failure, the following configuration select switch becomes effective by turning the main key to ON.

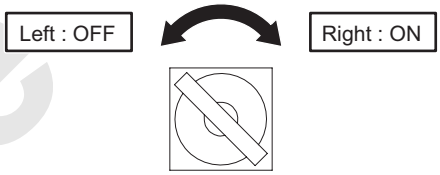

17. LOAD SAFETY DEVICE BYPASS CONFIGURATION SELECT SWITCH

    While the main key is turned ON, selecting the configuration can release each auto-stop function.
    On this model, use the machine with this switch turning to “Crane side”.

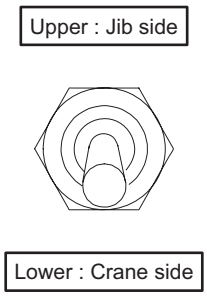

Jib side	Select when the luffing configuration is to be selected. (Not used.)
Crane side	Select when the crane configuration is to be selected.

Reference Only

3.3 CONNECTING PROCEDURE OF WIRING

⚠ CAUTION

The cable should be handled with care in order to avoid damage.
Do not pull or fasten.

When assembling the basic machine and attachment, make the connections as follows.
When disassembling, disconnect the connectors in the reverse order.

Before connecting the connectors, make sure that no foreign objects, water is in the connectors section of the connector.

- Insert the connector tightly and tighten firmly.
- Connect the removed caps together.
- After disconnecting, install the cap securely.

⚠ CAUTION

Overload preventive device may not work correctly if water is in the connectors.

⚠ CAUTION

Ensure to turn the key switch OFF to avoid any adverse effect to the electric devices when the connectors are in the process of connecting or disconnecting.
Failure to observe this precaution may lead to damage parts.

⚠ CAUTION

Ensure to match the key position of the plug and receptacle when connecting the connector to avoid damage to the connector.

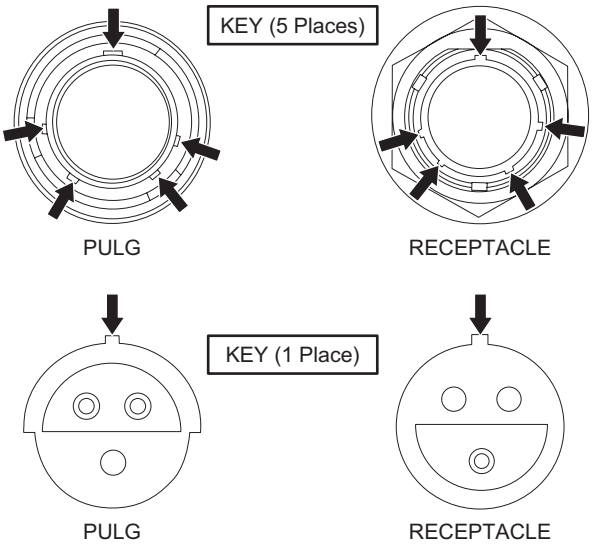

Reference Only

3.3.1 CRANE ATTACHMENT

1. Diagram of system

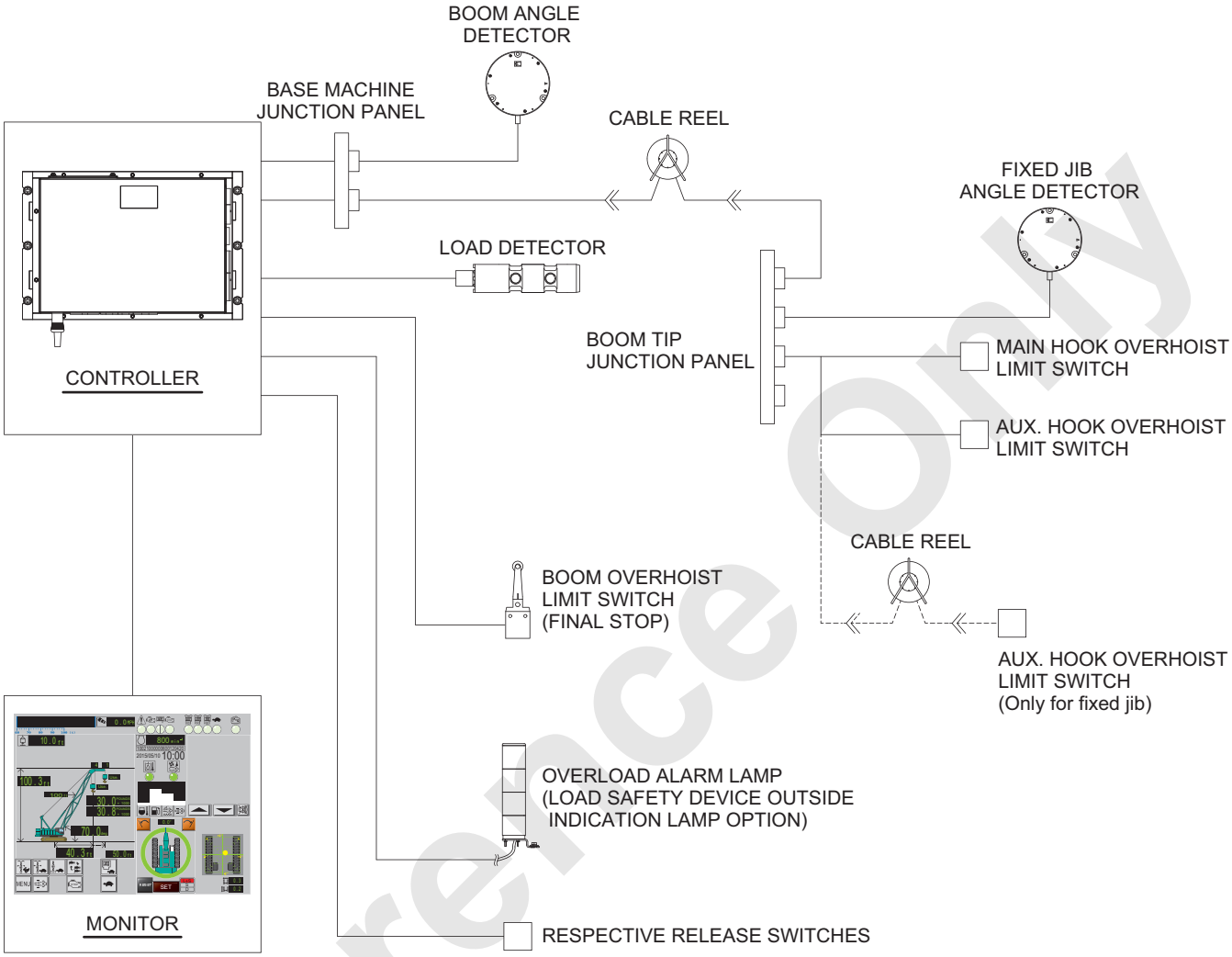

Reference Only

2. Connecting points of respective wiring

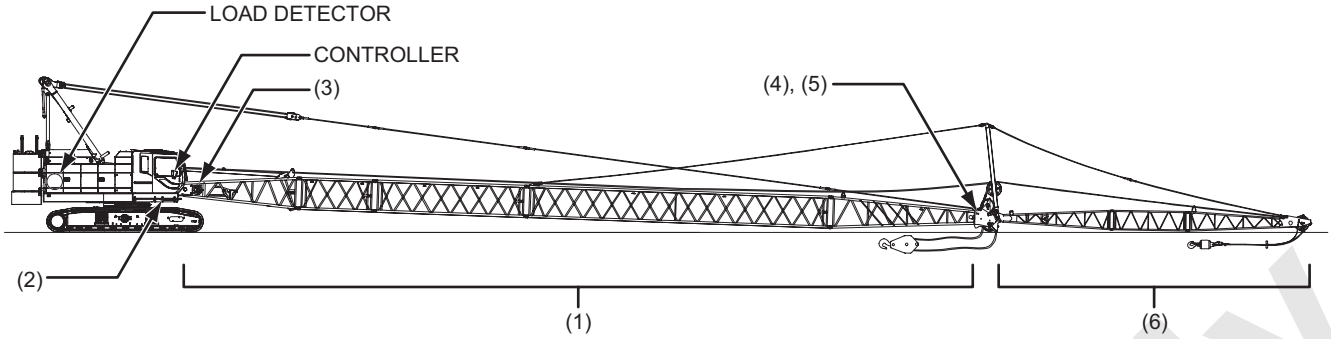

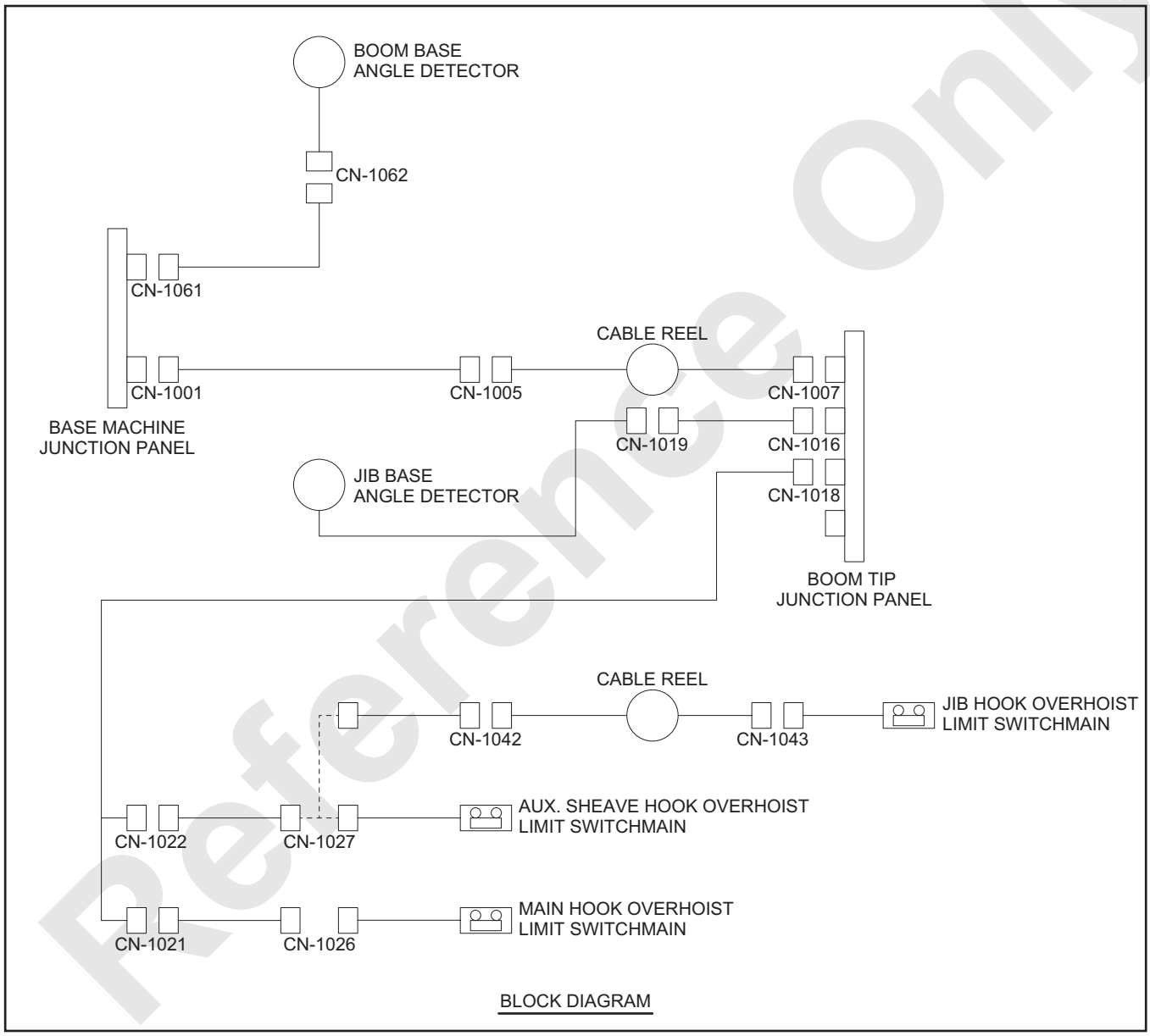

BLOCK DIAGRAM

Reference Only

3. Connecting procedure

(1) Secure the junction cable and the limit switch cable to the boom or jib with hangers.

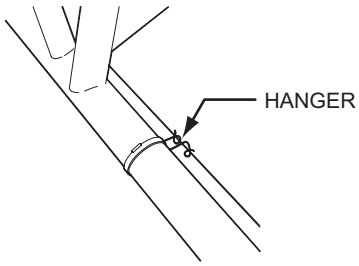

(2) Connections at the base machine junction panel

(A) Connect the cable (1) from the boom angle detector.
(B) Connect the cable (2) from the cable reel.

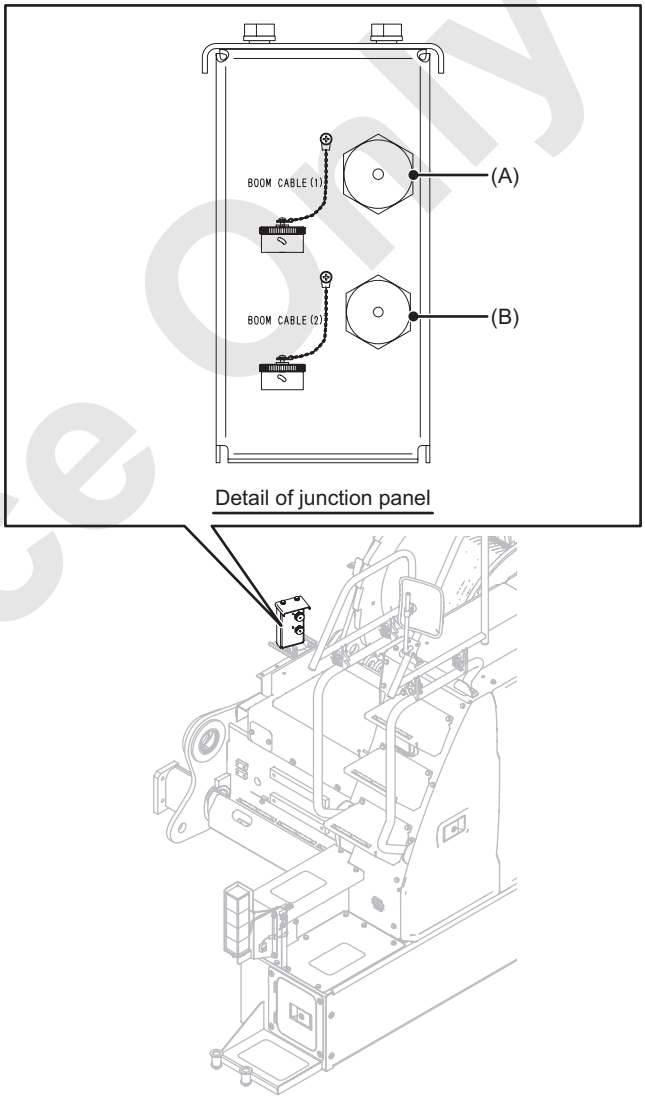

Reference Only

(3) Connections at the cable reel

(A) At crane work

- The method of cable pays out.
  When pay out the cable from cable reel, turn the cable reel with hold a thimble.

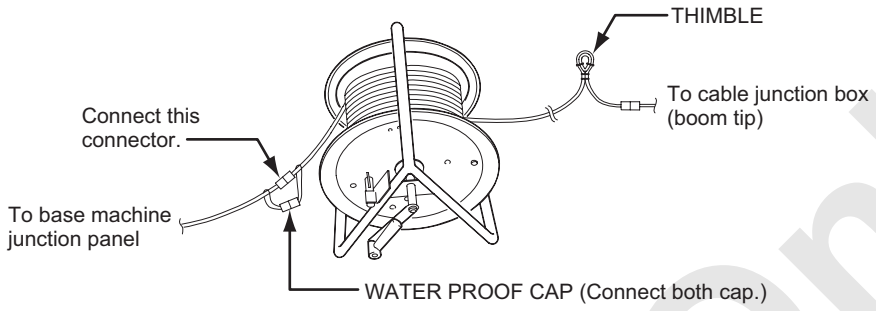

CAUTION

When pay out the cable, pay out with holding the thimble.
If pay out the cable with holding the connector, the thimble part receives the load and may lead to break the internal cable.

WARNING

Do not operate crane while the water proof caps are connected to the cable.
The auto-stop and alarming will not be issued even when hook overhoist occurs.
Failure to observe this precaution may result in a serious accident.

(B) At transportation

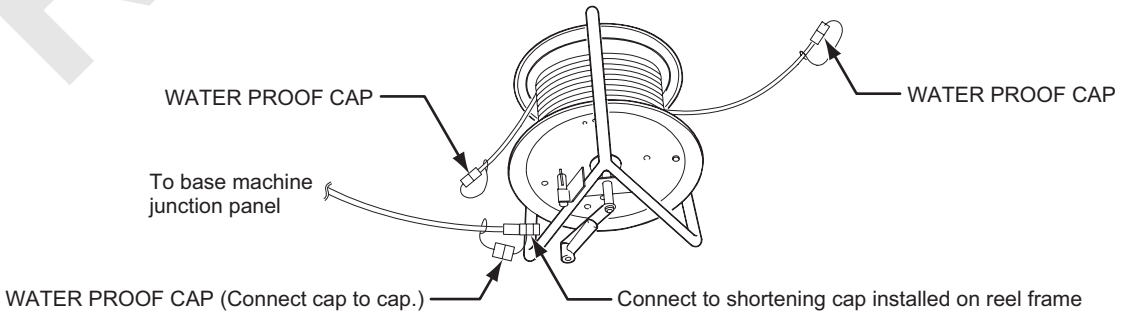

Reference Only

(4) Installation of thimble
Ensure to hang the thimble on the cable hook provided on the boom tip area.
Otherwise unreasonable force would be applied to the connector for the hook overhoist limit switch and may cause of damage.

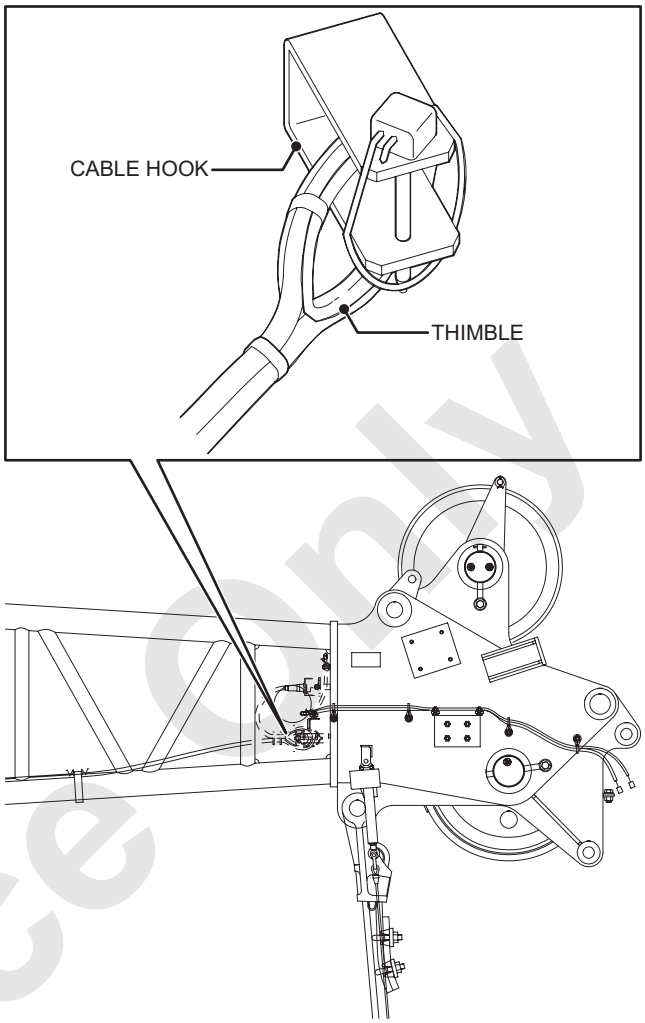

Reference Only

(5) Connection of hook overhoist limit switch area
(Crane work with aux. sheave)

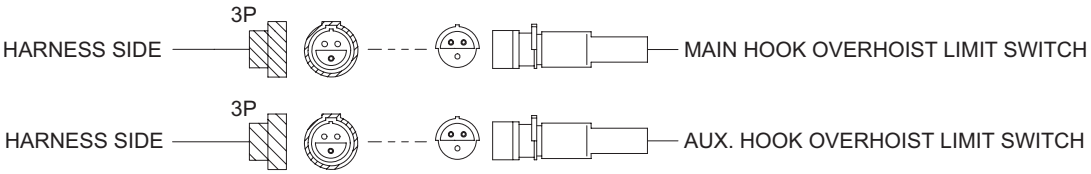

- **In case without the aux. sheave**

(A) Connect cable from the reel to junction panel.
(B) Connect the main hook limit switch connector.

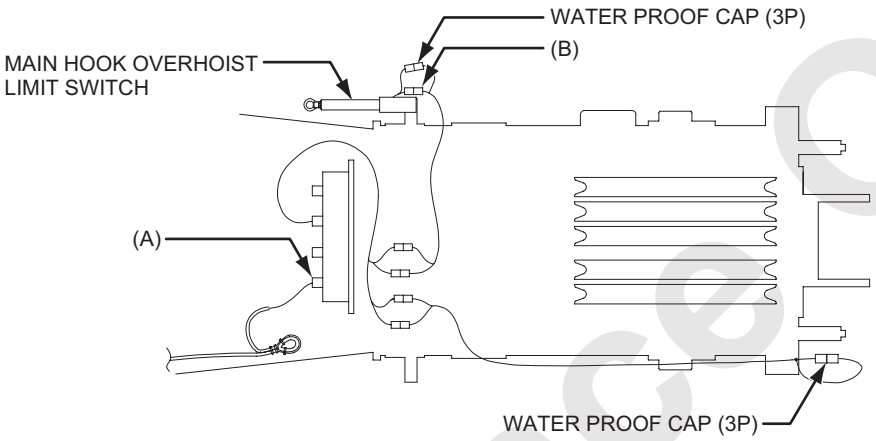

- **In case with the aux. sheave**

(A) Connect cable from the reel to junction panel.
(B) Connect the main hook limit switch connector.
(C) Connect the aux. hook limit switch connector.

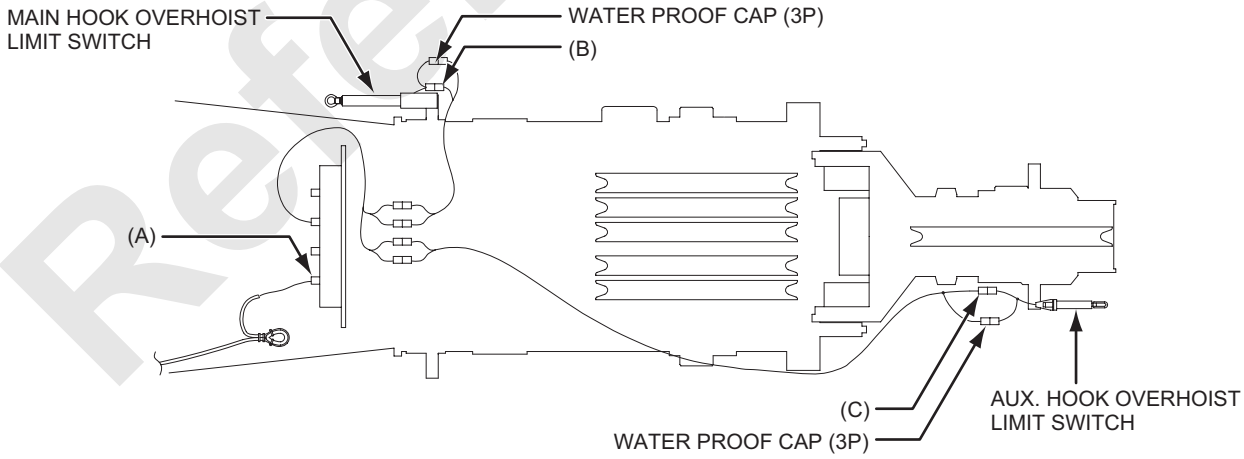

Reference Only

(6) Connection of jib area (in case with fixed jib)

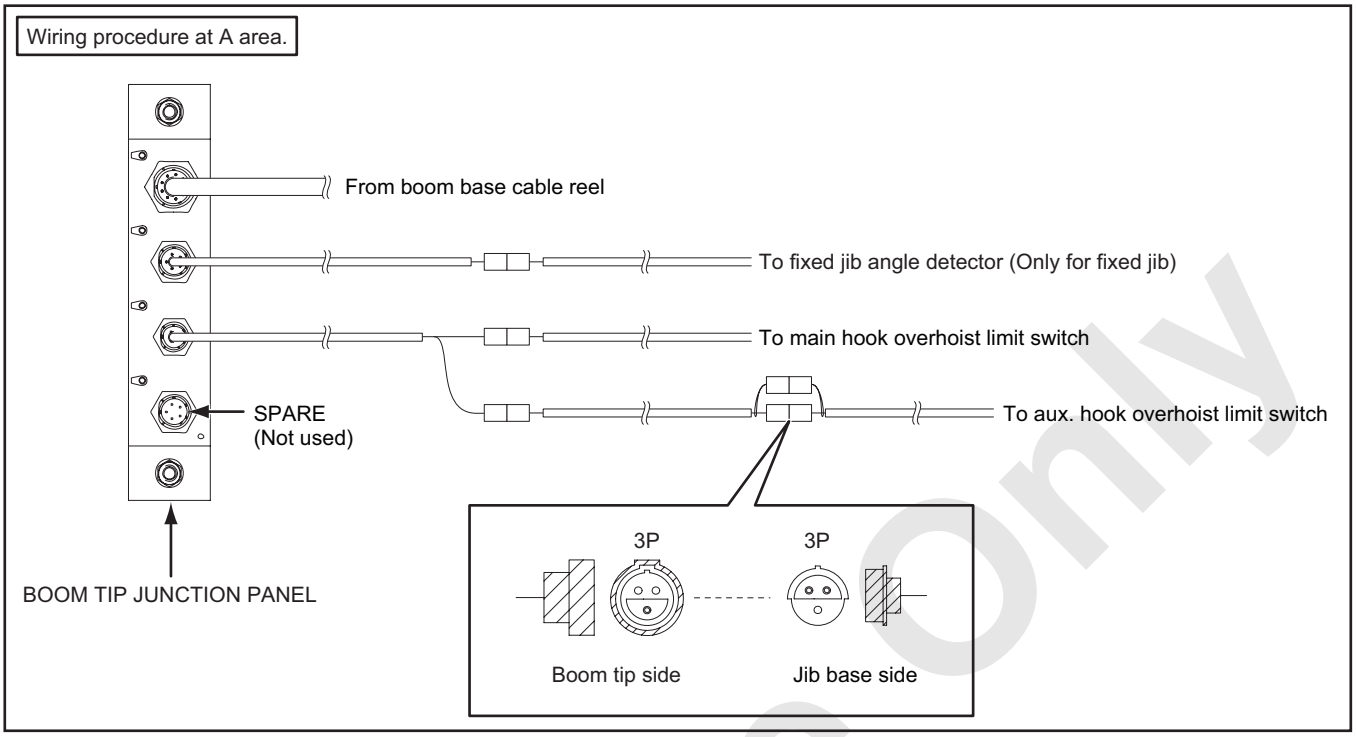

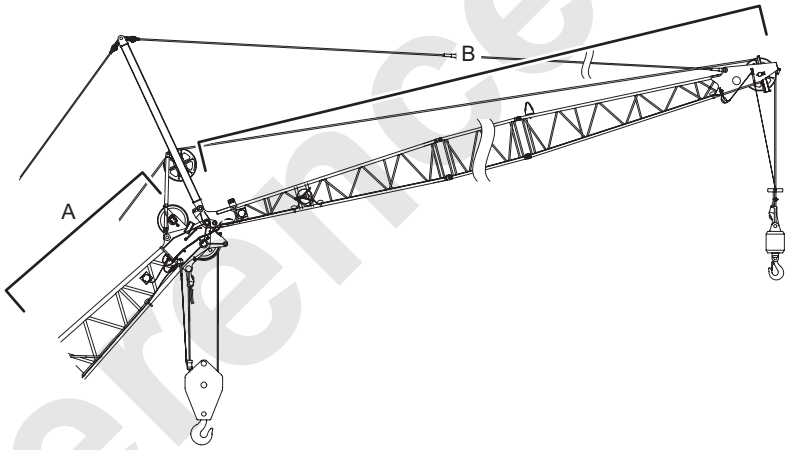

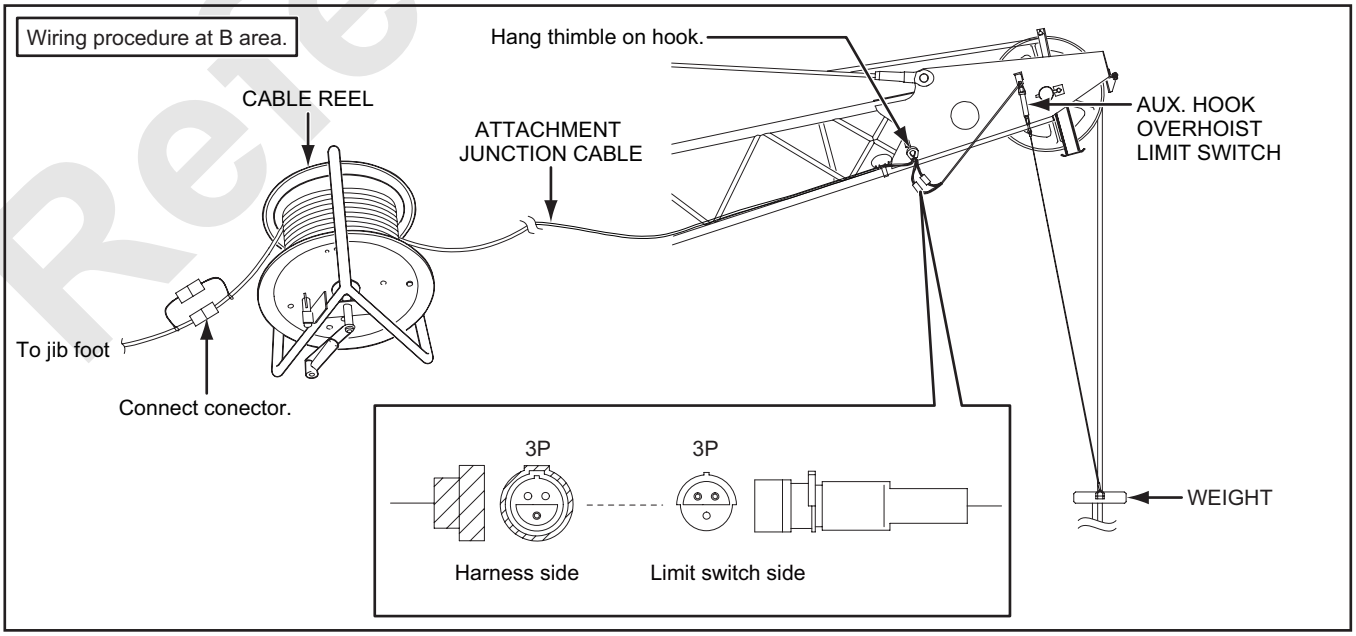

Reference Only

3.4 FUNCTION OF MONITOR

Change the screen protector if it is dirty or damaged.

CAUTION

Do not press the touch panel screen with sharp object such as tool or handle with excessive force to avoid monitor failure.

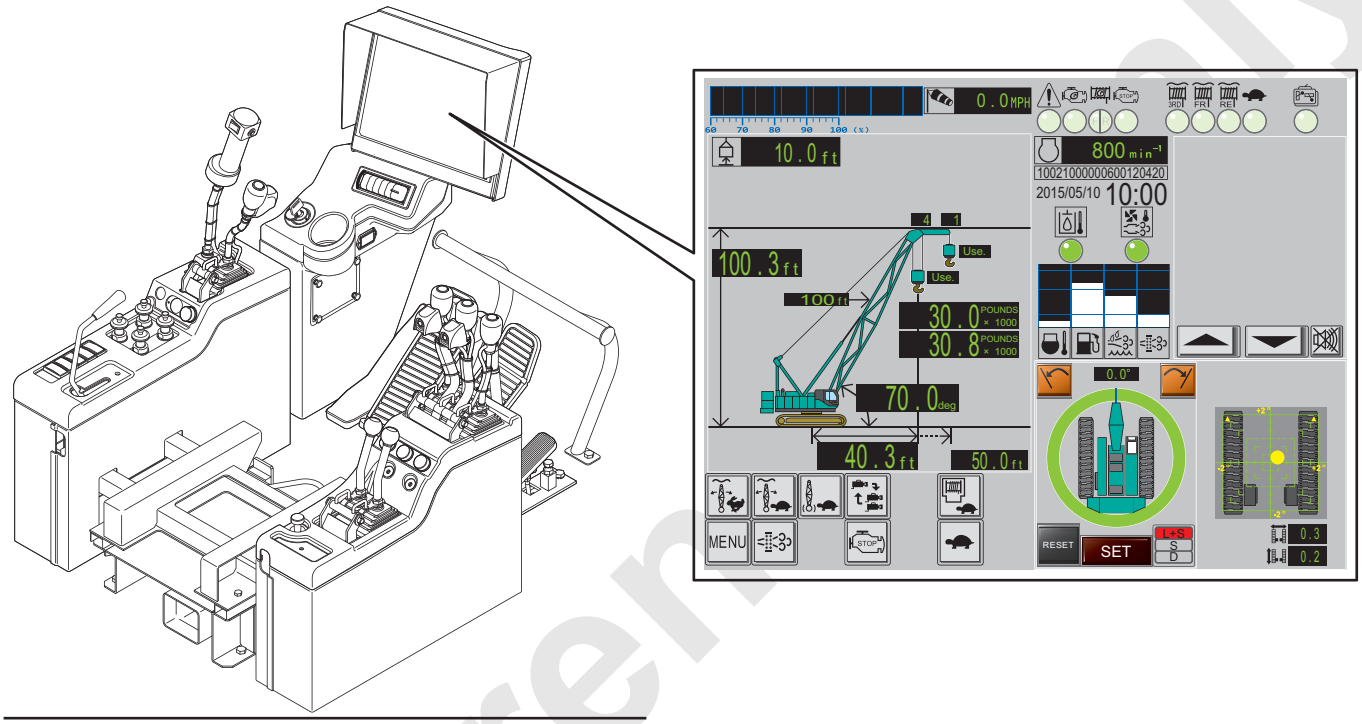

Note

All values in the monitor displays are for reference only.

Reference only

3.5 OPERATING PROCEDURE OF MONITOR

Referring to the setting items (following), perform necessary setting.

Setting item	Set timing category		
	Daily operation	Operation after changing attachment	Operation at initial erection
(1) Setting of crane configuration	×	○	○
(2) Selection of front/rear drum lifting	□	○	○
(3) Setting of working area limit value	□	□	□

○ : Necessary × : Unnecessary □ : If necessary

The Input data are memorized and retained in the controller even by stopping the engine or turning the power off.

1. Turning power on

   When the key switch is turned to the ON position, power will be supplied to the monitor.
   If power is not supplied to the monitor, check the fuse.

⚠ CAUTION

It may take several seconds to boot-up the monitor and display.
Do not operate the crane while this period.

Reference Only

2. Crane configuration screen

When power is supplied to the monitor, the following screen is displayed on the monitor.
The crane configuration is indicated on the screen.
Check to see that this configuration matches with the actual crane configuration.
If so, press NEXT icon.
If different, re-setting required.
Press icon and start setting.
Referring to "3.5.1 SETTING OF CRANE CONFIGURATION".

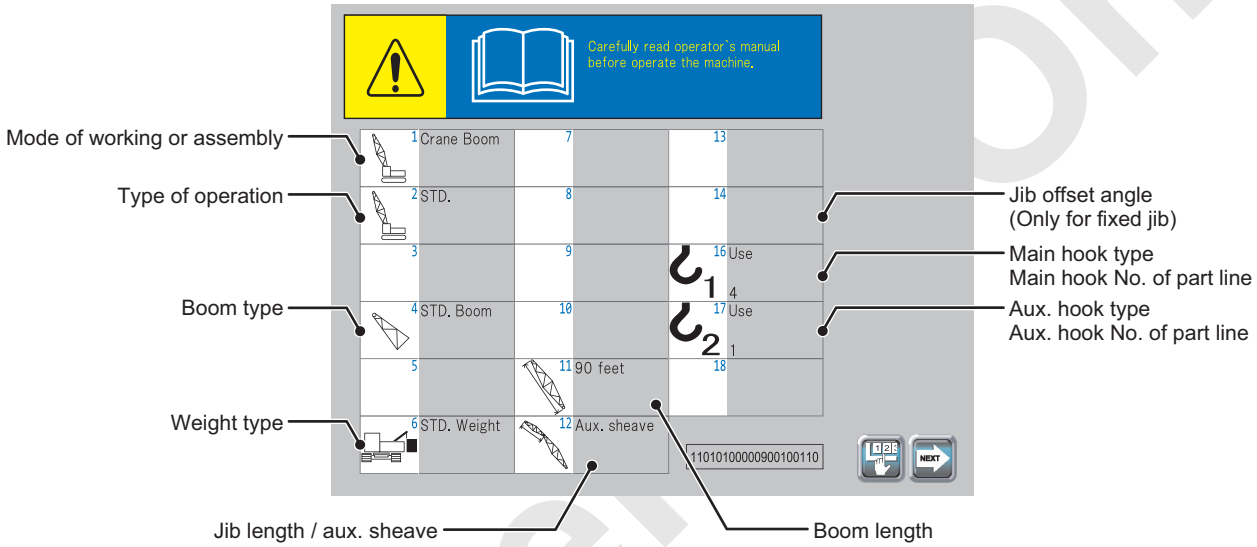

Note

The optional items or custom specifications are to be indicated in the blank on the monitor.

Reference Only

3. Work area limit screen

Then setting condition of work area limit is displayed.
After checking the content, press (OK) icon.
By pressing icon, setting can be changed.
Refer to “3.5.1 SETTING OF CRANE CONFIGURATION”.

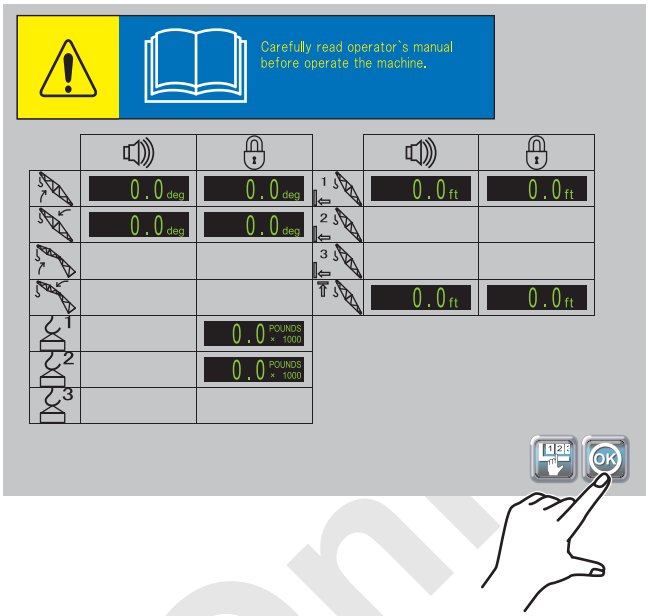

Reference Only

4. Main screen

Main screen is displayed and the crane is ready to operate.
As for the detail of message display area, refer to “3.13 WARNING CODE LIST AND CONDITION, ACTION”.

Note

All values in the monitor displays are for reference only.

- EXAMPLE DISPLAY OF MAIN SCREEN.

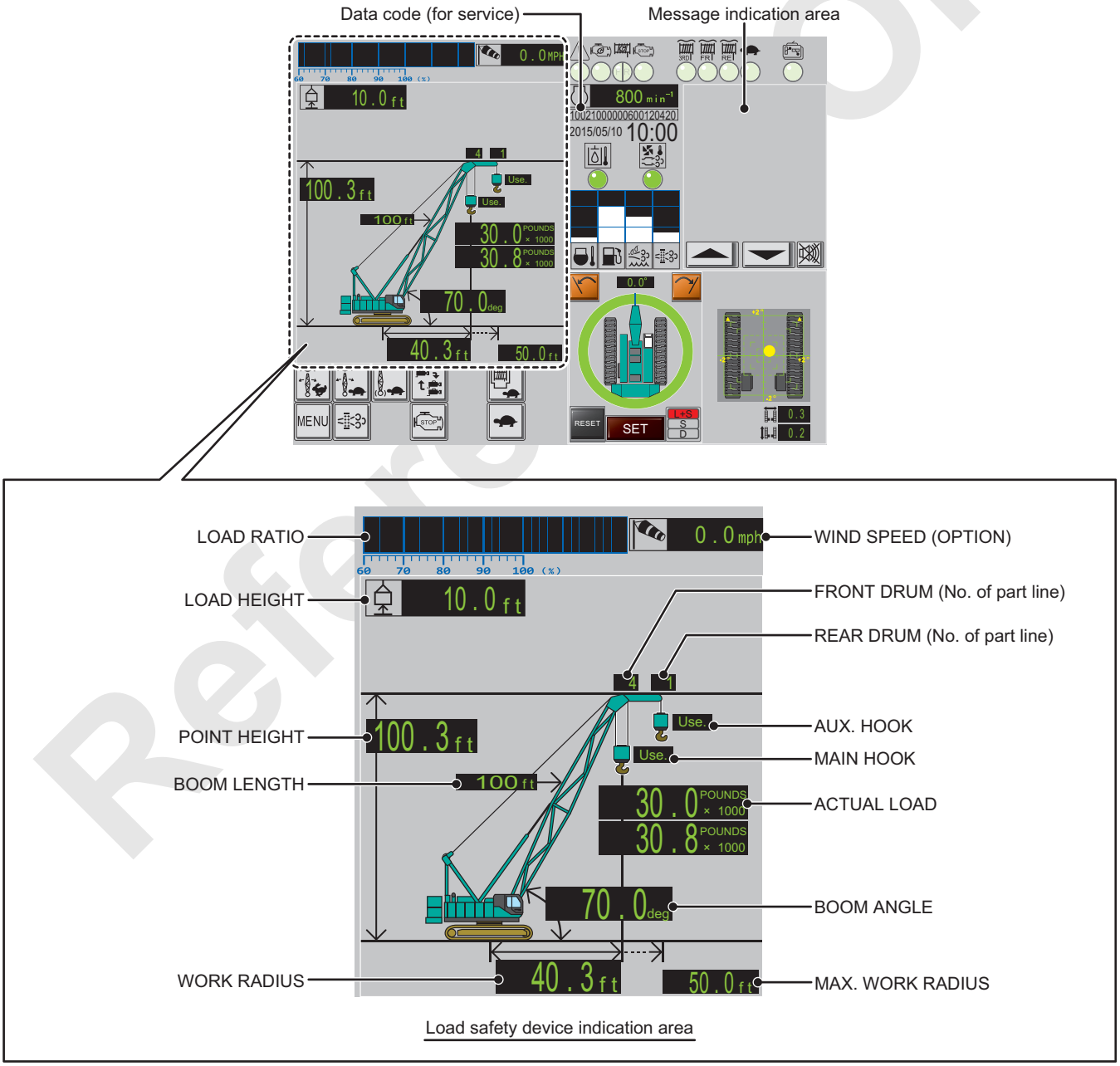

Reference Only

5. How to read load safety device indication

(1) Each data display (Example of indication)

Name	Display ex.	Content
Boom angle indication	70.0 deg	Indicate boom angle by 0.1 degrees unit.
Jib offset angle indication	10.0 deg	For fixed jib, indicate selected angle.
Point height indication	101.3 ft	Indicate boom or jib point height by 0.1 ft. unit
Work radius indication	40.3 ft	Indicate work radius by 0.1 ft. unit.
Max. radius indication	50.0 ft	Indicate max. work radius by 0.1 ft. unit.
Actual load	30.0 POUNDS × 1000	Indicate actual load by 0.1 klbs unit.
Rated load	38.0 POUNDS × 1000	Indicate rated load by 0.1 klbs unit.
Load height indication	30.0 ft	Indicate hook position from zero reset position by 0.1 ft. unit.
Boom length	100 ft	Indicate selected boom length.
Jib length	40 ft	Indicate selected jib length. (Only for fixed jib)
Front drum No. of part line	4	Indicate input number of lines on front drum.
Rear drum No. of part line	1	Indicate input number of lines on rear drum.
Main hook	Use.	Indicate Use when selected main hook.
Aux. hook	Use.	Indicate Use when selected aux. hook.
Wind speed indication (option)	5.0 mph	Indicate wind speed by 0.1 MPH.

(2) Load ratio display (Example of indication)
Load ratio display lamp lights up from left to right in order as load ratio increase.

Load ratio	Display
Less than 60 %	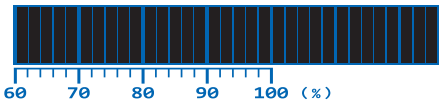
76 %	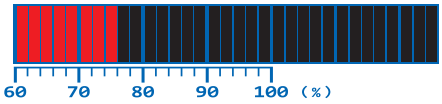
From 90 % to 100 %	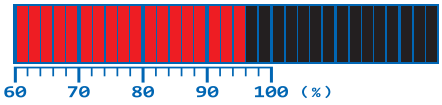
105 %	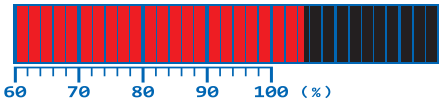

Reference Only

3.5.1 SETTING OF CRANE CONFIGURATION

DANGER

Input the crane configuration properly to prevent machine overturning or damage.
Failure to observe this precaution may result in a serious accident.

Crane configuration setting is required on the type of attachment, boom length, with/without aux. sheave and type of hook.

SETTING PROCEDURE

1. Press MENU icon while the main screen is indicated.
   Menu screen is now displayed.

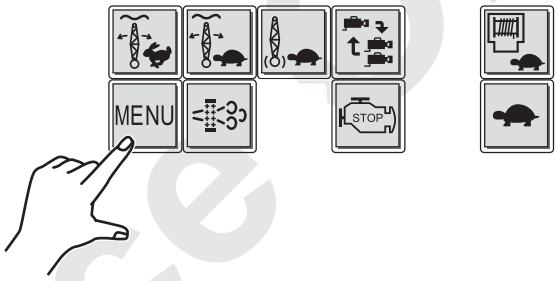

2. On the selected screen, select the mark and press SET icon.

3. After this, select the items to set and follow according to the screen instruction.

SELECTION ITEMS

Type of attachment
Boom length
Type of jib
Jib offset angle
With/without Aux. sheave
With/without Main hook
With/without Aux. hook
Number of part line

Reference Only

4. List of ML monitor symbol at configuration setting

The symbols used on this machine are shaded.

1	Crane
2	Luffing or tower
3	HL crane
4	HL luffing
5	SHL crane
6	SHL luffing
7	Clam shell
8	Drag line
9	Floating crane
10	Self removal (Boom base)
11	Self removal (Mast)
12	Self removal (CWT)
13	Pick and carry
14	Simultaneous hoist
15	Pile driver
16	Boom only (With hook)
17	Boom only (Without hook)
18	With aux. sheave (With hook)
19	With aux. sheave (Without hook)
20	Fixed jib (With hook)
21	With fixed jib (Without hook)
22	Jib offset angle
23	Jib length
24	Boom length
25	Boom top (STD)
26	Boom top (Luffing 1) LF
27	Boom top (Long)
28	Boom top (Luffing 2) LF
29	Boom top (Light) LT
30	Boom top (Heavy) HD
31	CWT (Vertical 3)
32	CWT (Vertical 2)
33	CWT (Vertical 1)
34	CWT (vertical 2) Crawler ret.
35	Full CWT Without CBWT
36	Less CWT Without CBWT
37	Add. CWT Without CBWT
38	Add. CWT Two CBWT
39	Full CWT Two CBWT
40	Full CWT One CBWT
41	SHL weight (Large)
42	SHL weight (Middle)
43	SHL weight (Small)
44	Self removal (Boom base 2)
45	Self removal (Mast 2)

Reference Only

46	Hook 1
47	Hook 2
48	Hook 3
49	Front drum in use
50	Rear drum in use
51	Third drum in use
52	Single drum
53	Double drum
54	Clam shell (Side way pull possible)
55	Clam shell (No side way pull)
56	With hook pocket
57	Without hook pocket
58	SHL weight radius
59	CWT (vertical 4)
60	Full CWT One CBWT
61	Without CWT
62	Without third drum
63	Double drum with third drum
64	Double drum without third drum
65	Self removal (SHL mast)
66	With point sheave
67	Without point sheave
68	Jib (With aux. sheave)
69	Stop
70	Alarm
71	Crawler full ext.
72	Crawler mid ext.
73	Crawler full ret.
74	Fixed jib crane
75	Luffing crane
76	Tower crane
77	SHL mast radius
78	Less CWT One CBWT
79	Mast control (1)
80	Mast control (2)
81	Self removal (CBWT)
82	Self removal (CWT pile up)
83	Self removal (Mast 3)
84	Self removal (Boom base 3)
85	
86	
87	
88	
89	
90	

Reference only

SETTING EXAMPLE

Attachment type	Crane
Boom length	90 feet
Jib type	Aux. sheave
Main, Aux. hook	Main hook = Use Aux. hook = Use
Number of part of line	Main hook = 4 Aux. hook = 1

Setting procedure of the above items is as follows;
If input item is in error, press BACK icon to return to the previous screen.

1. Attachment select screen is displayed.
   Select “2 (Crane Boom)”.

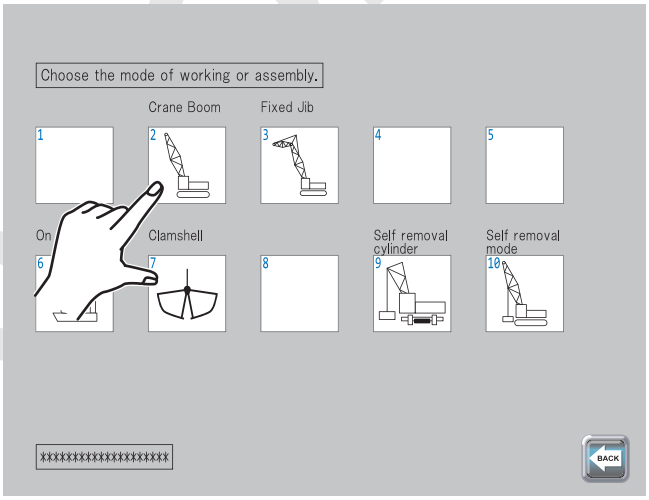

2. Counterweight select screen is displayed.
   (Indicate only in the case of reduced counterweight specification is equipped)
   Select “2 (STD Weight)”.

STD	Counterweight No.1 to No.5 With carbody weight
Reduced	Counterweight No.1 to No.3 Without carbody weight

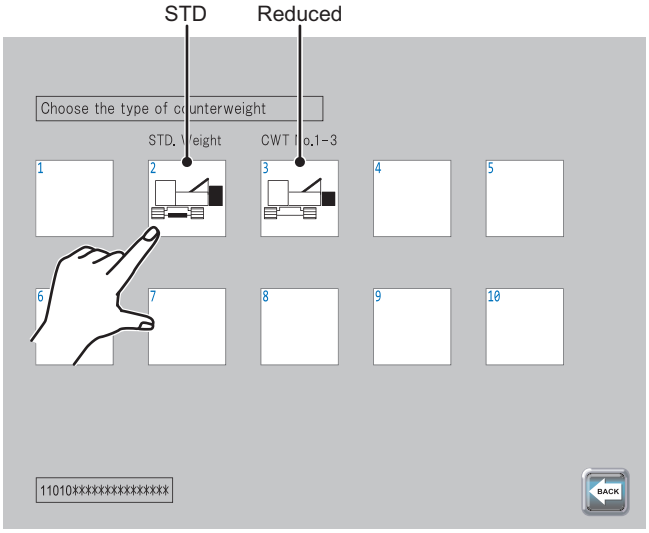

Reference Only

3. Boom length select screen is displayed.
   Select “90 feet”.

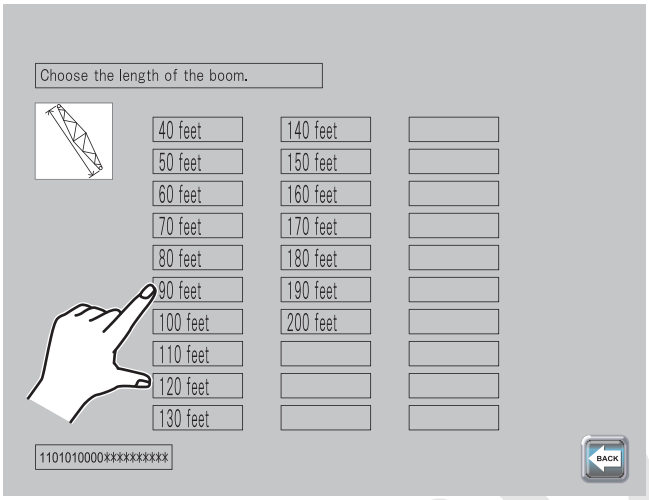

4. Aux. sheave select screen is displayed.
   Select “Aux. sheave”.

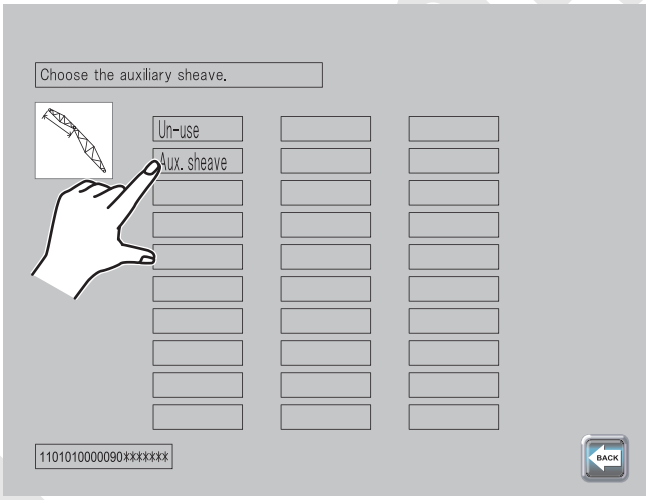

5. Main hook select screen is displayed.
   Select “Use”.

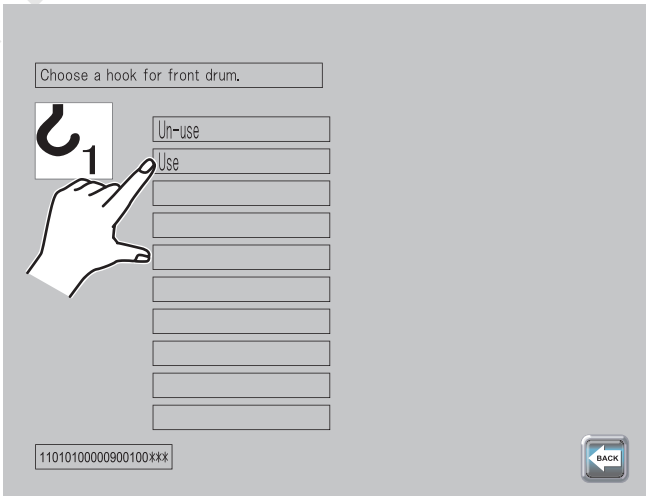

Reference

6. Aux. hook select screen is displayed.
   Select “Use”.

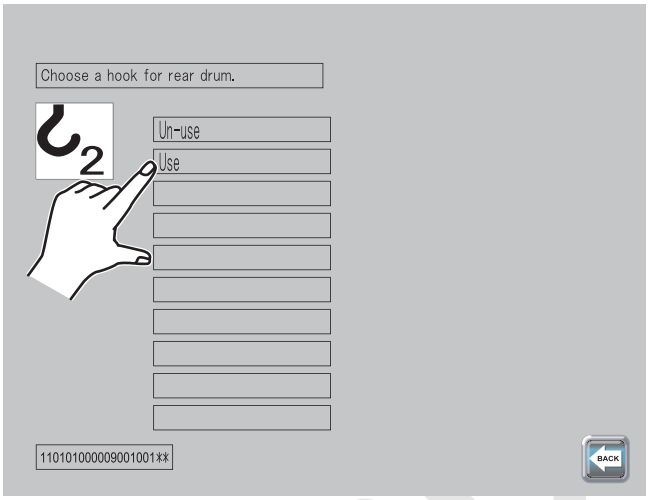

7. Finally number of part of line input screen is displayed.
   Input “4” into Main and “1” into Aux.

NUMERIC INPUT METHOD

(1) Press “0” in the front drum number of part of line.
   The numeric keypad is displayed.

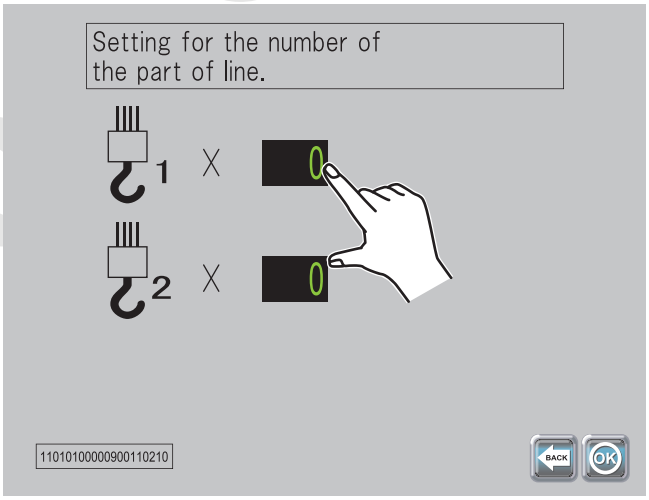

(2) Press “4”.

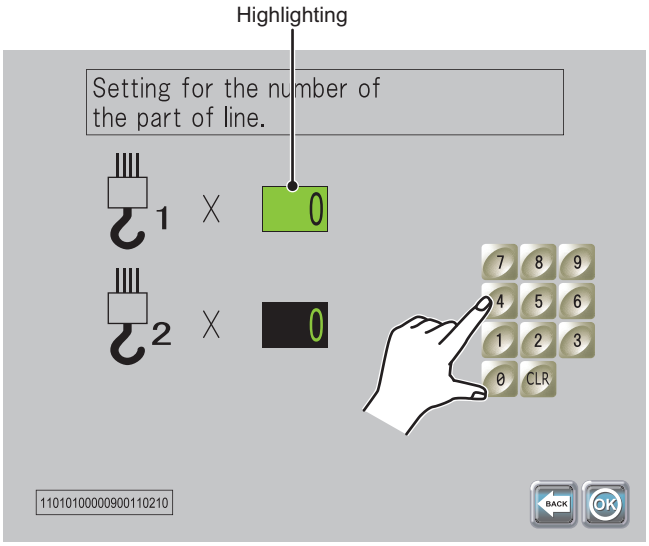

Reference Only

(3) Press “0” in the rear drum number of part of line.

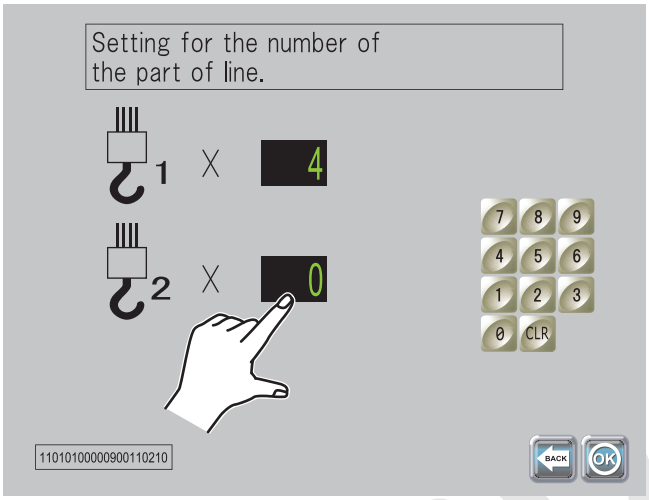

(4) Press “1” by the number pad.

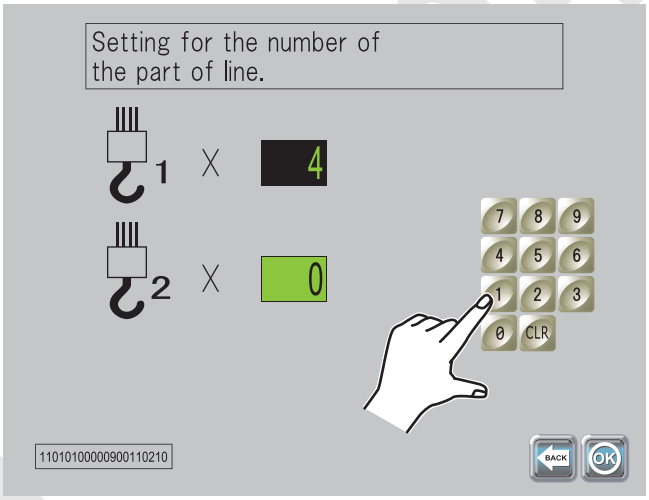

(5) Press OK.

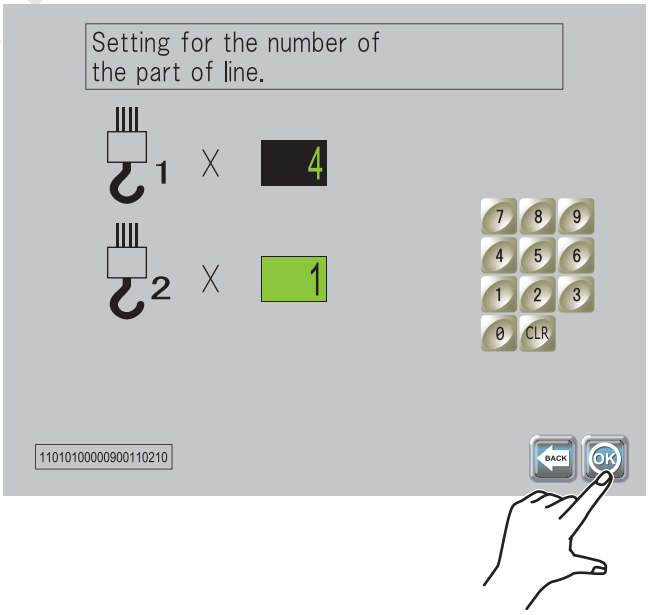

Reference

8. When all the settings are completed, data is being searching.

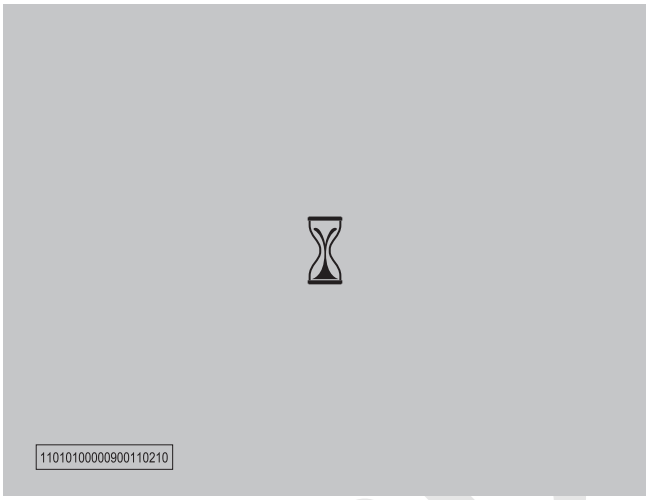

- **NO ERROR CASE**

  In case of the data could searched, the result of selected items are displayed.
  Check if the selected items are correct.
  If correct, press OK.
  The screen returns to main screen.
  If not correct, press .
  Then screen returns to “attachment select screen” and start re-input.

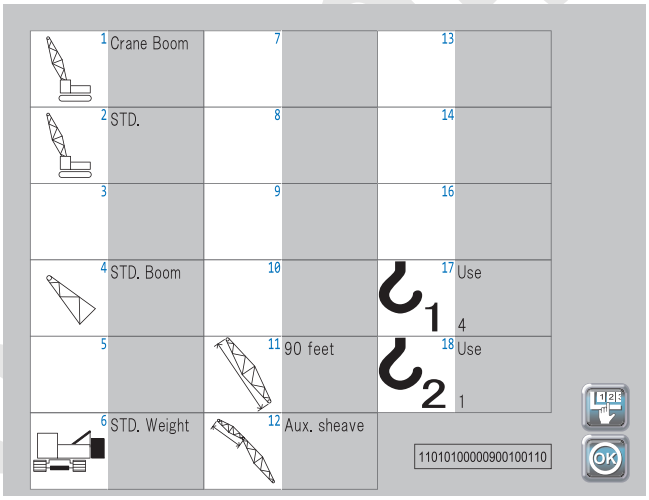

- **ERROR CASE**

  In case of the data could not searched, the error message is displayed with buzzer sounding.
  Press SET and confirm the machine configuration and conduct resetting.

Note

In case the selection is limited to only one choice, select screen is to be neglected and indicates only the result.

Reference

- **READING ERROR OF CF CARD**

  If the data in the data card can not be read out, the following screen will be displayed.
  Contact the Manitowoc authorized service shop.

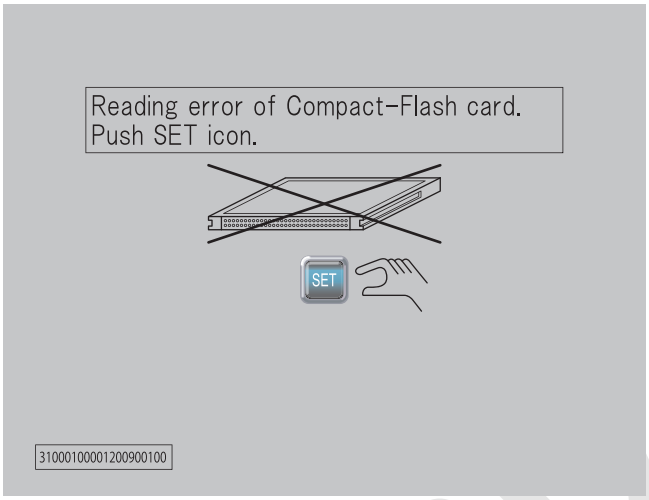

Reference Only

3.5.2 SELECTION OF MAIN/AUXILIARY HOOK SELECTION

DANGER

Input the crane configuration properly to prevent machine overturning or damage.
Failure to observe this precaution may result in a serious accident.

In case both of main hook (front drum) and auxiliary hook (rear drum) are equipped, ensure to select main lifting (front drum) or auxiliary lifting (rear drum) based on actual hook being used to change capacity.
Selecting procedure is as follows.

[SELECT PROCEDURE]
Press figure of actually used hook for work for 3 seconds or more.
Selected hook is indicated brightly and non selected hook is indicated semi transparently.

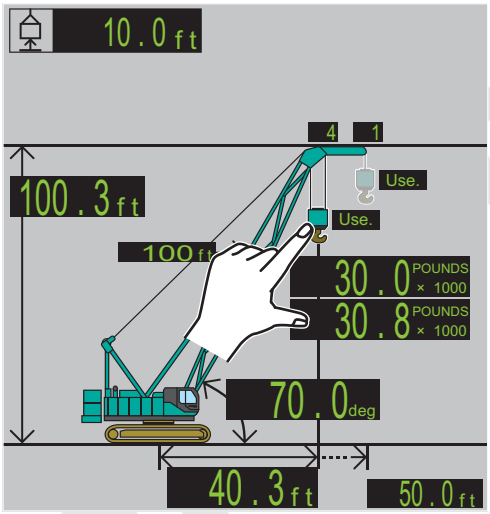

Main lifting selection

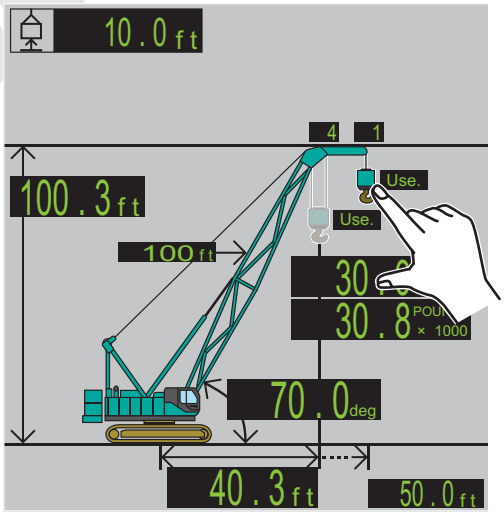

Aux. lifting selection

Reference Only

3.5.3 SETTING OF WORK AREA LIMIT VALUE

In case of work requiring area limitations as work within the building or narrow area, the extent of machine moving range can be set arbitrary in addition to the rated area limited with overload preventive device.
The following items (A) to (E) are able to set.
“The lifting load limit” can be set only at stop point and other items can be set at both pre-notice point and stop point individually.
When only stop point is set, pre-notice would be issued on the specified point as shown the table below.
Respective operation exceed the pre-notice point, issue intermittent warning sound is issued and issued continuous sound are issued when the machine reaches to the stop point and toward to danger side operation will automatically stops.
As for intermittent and continuous sound are issued only when operated toward to danger side, even when the machine reaches to each limited values, the control lever is in neutral position or toward to safe side sound is not issued.

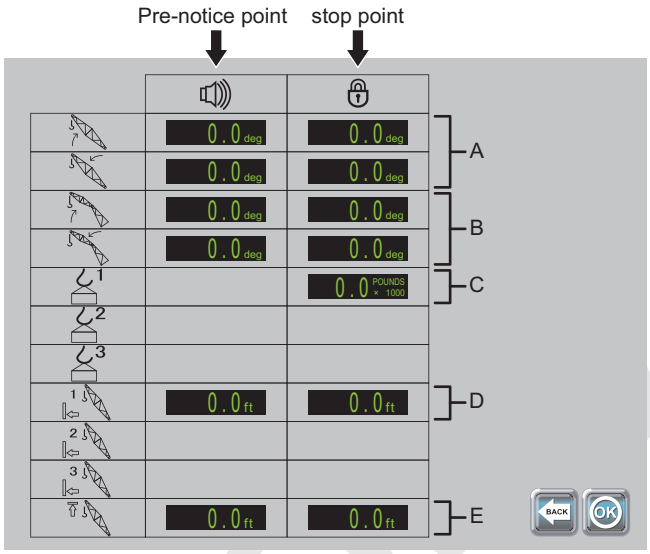

TABLE OF WORK AREA LIMIT VALUES

Limit item	Setting unit	Pre-notice point
(A) Boom upper/lower angle limit value	Set with 0.1 degrees unit	5 degrees before stop point (In case pre-notice point is not set)
(B) Jib upper/lower angle limit	Set with 0.1 degrees unit	5 degrees before stop point (In case pre-notice point is not set)
(C) Lifting load limit value (front and rear. drum)	Set with 100 lbs unit	90 % of stop value (Pre-notice point would not be set)
(D) Work area limit value (front and rear drum)	Set with 0.1 ft. unit	1 m before stop point (In case pre-notice point is not set)
(E) Max. height limit value	Set with 0.1 ft. unit	1 m before stop point (In case pre-notice point is not set)

(A) to (E) above can be set at the same time (multiple setting).
Set value is memorized until changed even if the power is cut.

Reference Only

SETTING

1. With the main screen being on the indication area, press MENU icon.
   Menu screen is displayed.

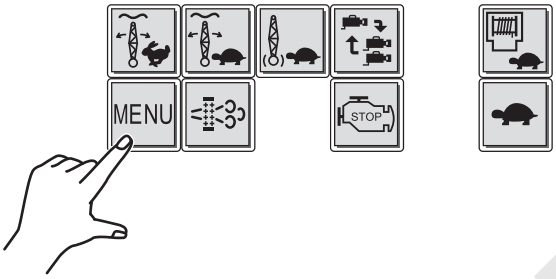

2. Press in the menu.

Reference

3. Work area limit setting screen is displayed.
   (The screen example is crane case.)
   Press the figure area if new setting is required.
   Numeric keypad is displayed on right part of the screen.

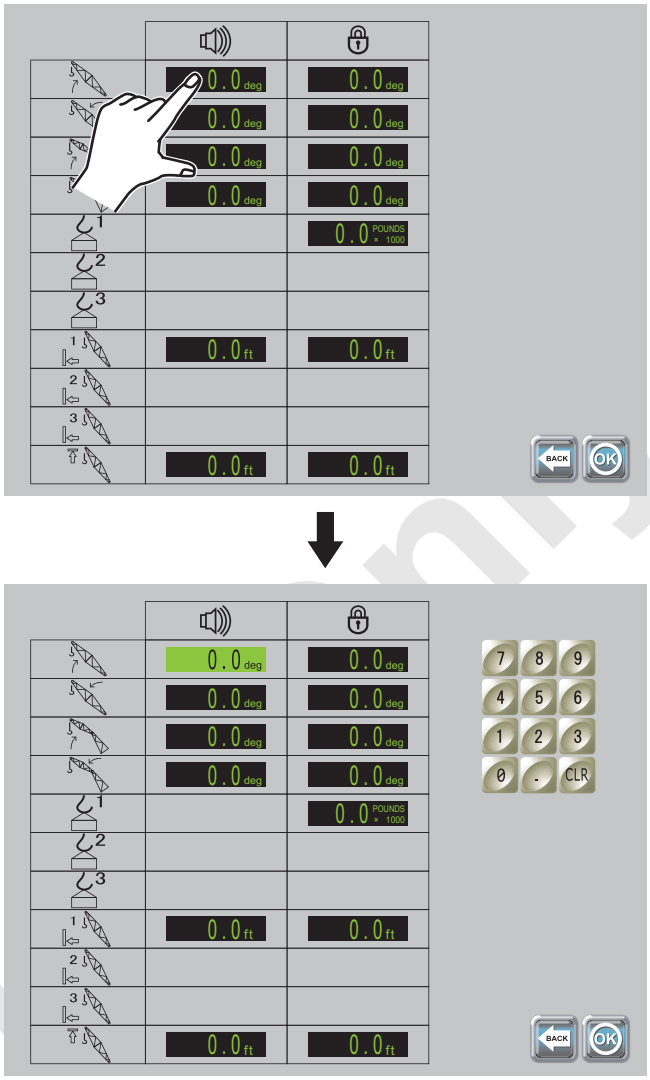

Reference only

4. Setting method

Ex) In case of pre-notice point setting of boom upper limit angle.

(1) Raise the boom to the angle where pre-notice is required to issue.
(2) Press the figure area of the boom upper limit angle (pre-notice point).
(3) Indicated value of the present boom angle.
(4) If fine adjustment is required, input value with the numeric keypad.
(5) When value is decided, press OK icon.
This is to complete the work area setting.

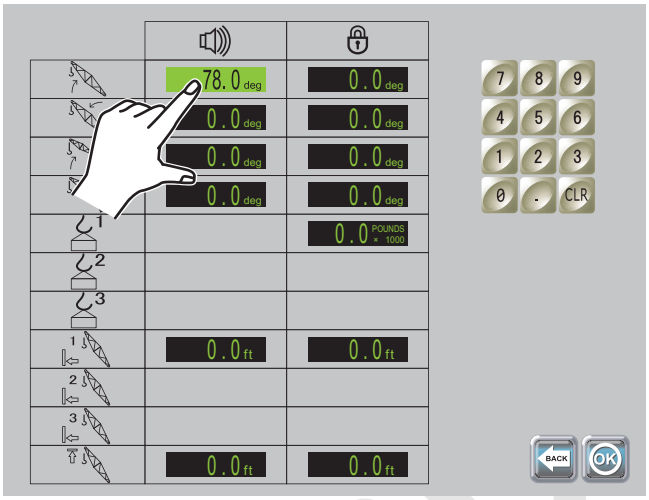

- **Pre-notice point and alarming point (stop point)**
  On the item with both pre-notice and alarming points are possible to be set, pre-notice point must be set to more safety side than the alarming point.
  If this rule is not followed, caution message is indicated and setting will not be accepted.
  Re-setting is necessary in such case.

- **If cancelling becomes required during input work**
  Cancelling is possible right after placing the cursor on setting required item and pressing the OK icon.
  Pressing the BACK icon returns the screen to the previous one and restart is possible.

- **IF THIS FUNCTION IS NOT USED**
  If for each “0.0” is displayed, the item’s limit function is OFF.
  Therefore set each item as “0.0” if the item function is not to be used.
  Place the cursor on “0.0” required item and press “CLR” icon to indicate “0.0”.
  Then press OK icon.

5. If other item needs to be changed, set the other items in the same way before pressing OK.

Reference Only

6. On items where the area limit setting is completed, figure area becomes yellow highlighted when the crane enters into the pre-notice zone and corresponding message code is indicated.

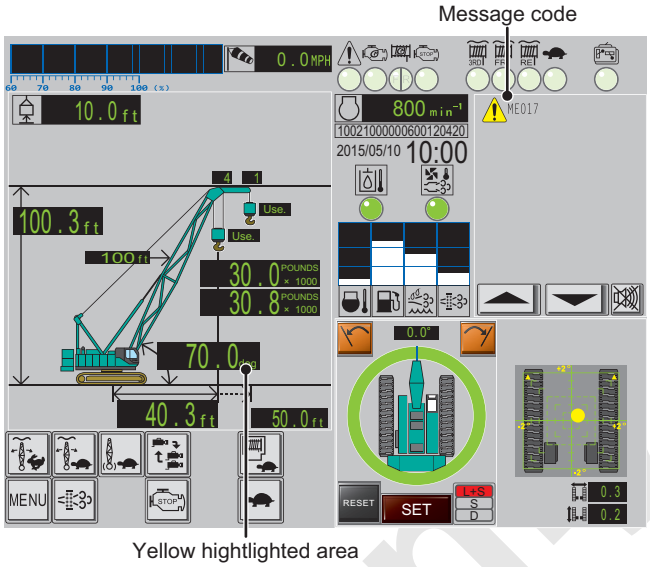

7. When the load limit is input, the rated load indication area becomes reverse indication (green background/black letters).

- Max height can not be set individually for main lifting and aux. lifting.
- In the main lifting mode, limit function becomes actuated when the boom point reaches to the set point.
  In the aux. lifting mode, limit function becomes actuated when the jib point (or aux. sheave) reaches to the set point.
- Input of the load limit value is to be done with input of variation of value only.

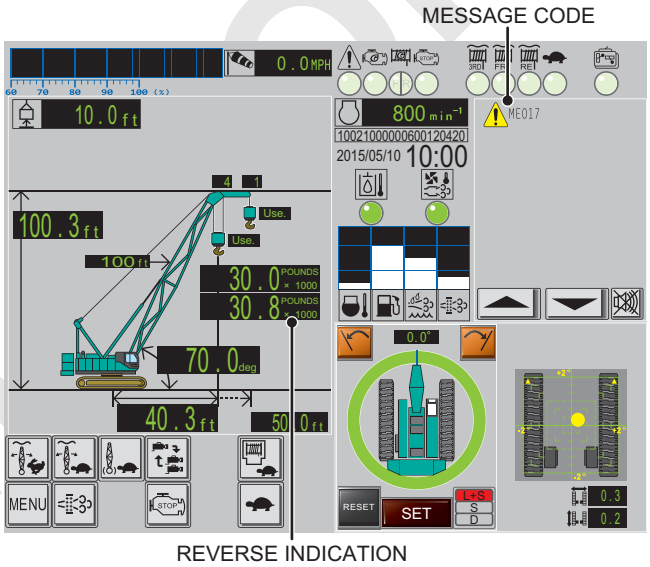

Reference Only

3.6 SWING LIMITATION DEVICE (OPTION)

1. Introduction

Swing limitation device (option) is a device that allows the operator to stop the upper machinery at any preset limit position (right and left).
When machine reaches either preset limit position, the controller automatically stops the swing motion of upper machinery and prevents upper machinery from passing the swing limit position.
The operator may swing the upper machinery in the opposite direction.
This device assists contact prevention from obstacle and may not provide automatic stop function without load swing.
Ensure to stop operation with your own operation before reaching left (or right) limit position while taking indication and warning into account.
Since the crane may overrun the left (or right) limit position by its inertia, set the limit position with some allowance.

Machine equipped with this option has the monitor indication on its right lower part of screen.

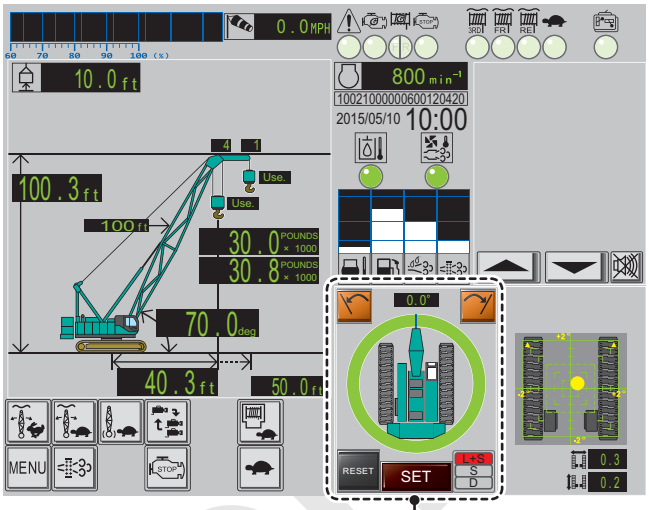

SWING LIMITATION INDICATOR

WARNING

Make sure to reduce the swing speed when the left (or right) limit position comes closer in order to prevent the accident by attachment damage.
Failure to observe this precaution may result in a serious accident and loss of life.

Reference Only

2. Detail of indicator

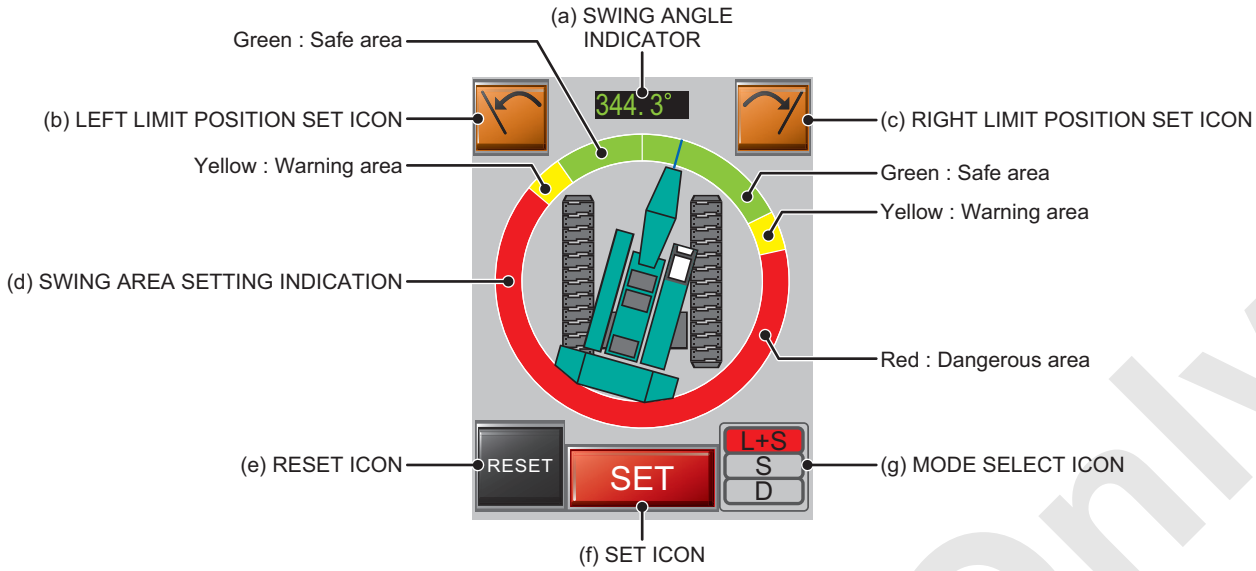

TABLE OF SWING AREA LIMIT FUNCTION DISPLAY

(a) SWING ANGLE INDICATOR	This indicates the present swing position by the angle. The front is 0 degrees and figure increases as crane swing left.
(b) LEFT LIMIT POSITION SET ICON	This icon is used to set the left limit position.
(c) RIGHT LIMIT POSITION SET ICON	This icon is used to set the right limit position.
(d) SWING AREA SETTING INDICATION	Swing areas setting indication displays in color by green, yellow and red on the circumference. • Red : Dangerous area • Yellow : Warning area • Green : Safe area
(e) RESET ICON	This icon is used to reset the swing area.
(f) SET ICON	This icon is used to select USE or NOT USE of swing limitation device. This icon lights up in color based on the selected mode. • Red : L+S mode • Yellow : S mode • Green : D mode
(g) MODE SELECT ICON	This icon is used to select trom three modes. • L+S mode : Indication, alarm and stop • S mode : Indication and alarm • D mode : Indication only

Reference Only

3. Mode

The following three modes are available in this device.
Select mode based on the needs.
Use mode select icon for selecting a mode.
The color of the set icon can tell the current set mode.
Each mode differs as explained below (1) to (3) but setting method of limit area, resetting and function are the same to all modes.

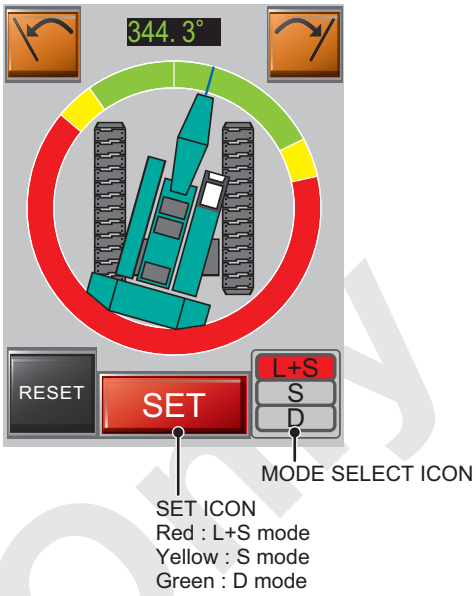

(1) L+S mode
The swing speed is reduced about 1/3 of the normal speed.
When enters into warning area (Yellow) intermittent buzzer sound is issued and the buzzer sound becomes higher pitch when comes closer to the dangerous area (Red).
When enters into the dangerous area (Red) continuous buzzer sound is issued and the swing to the dangerous direction would not be able to operated.

(2) S mode
When enters into warning area (Yellow) intermittent buzzer sound is issued and the buzzer sound becomes higher pitch when comes closer to the dangerous area (Red).
When enters into the dangerous area (Red) continuous buzzer sound is issued.

(3) D mode
Indicate only display and not performed warning and auto stop functions.

Reference Only

Ex) When swing right, to the red area, right swing stops.
In 5 seconds after entering into red area, swing parking brake also actuates automatically.
The swing parking brake will only be released during operation toward safety side (left side in the example below) or when the crane comes out of red area.

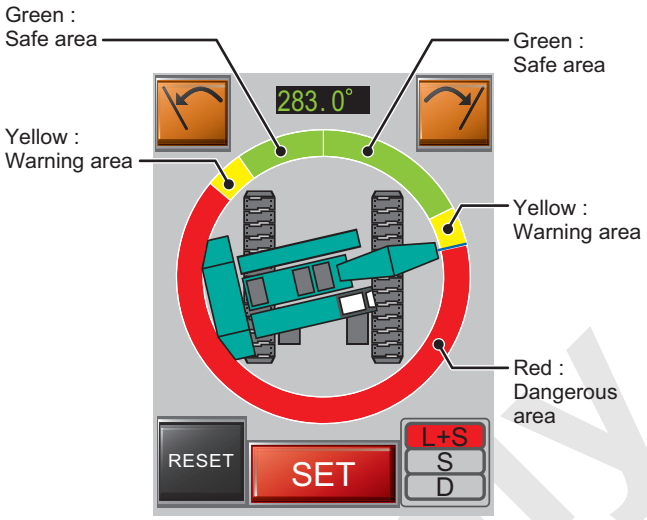

WARNING

Check the selected mode before starting the work. If the wrong mode is selected, alarming or stopping does not function properly.
Failure to observe this precaution may result in a serious accident and loss of life.

If the mode is changed after the limit area is set, only the mode (function) is changed while limit area setting is the same.
Therefore limit area re-setting is not required.

Reference Only

4. Limit area setting method

(1) Initial setting

(A) When engine is started, screen indicates as shown bellows.
The swing area setting indication will be green hatching indication on whole circumference appears due to the limit setting is not made and limit function is not effective yet.

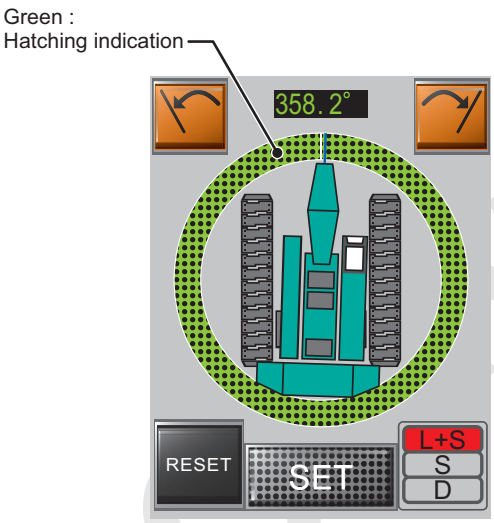

(B) Swing the crane left to the safe place just before the obstacle on the left side and stop.
Press the (Left limit position set icon).
Since the crane may overrun the limit position by its inertia, set the limit position with some allowance.
The boom facing area changes its color to red and right next to this area to yellow.
When the position has to be adjusted after (Left limit position set icon) is once pressed, swing to the exact position and again press (Left limit position set icon).
Red and yellow indication area are renewed.

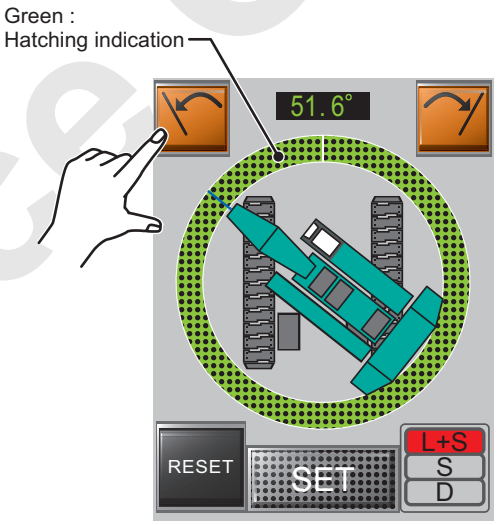

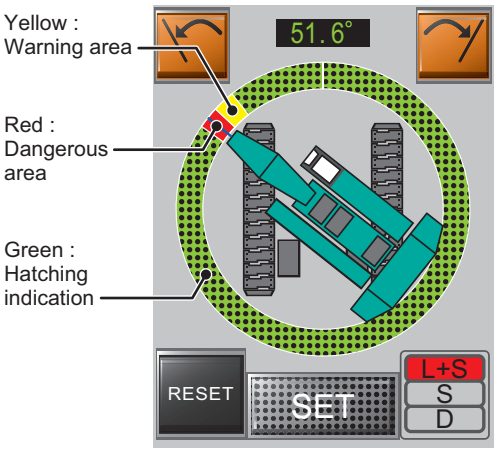

Reference Only

(C) Swing the crane right to the safe place just before the obstacle on the right side and stop. Press the icon (Right limit position set icon). The swing area is set.
When the position has to be adjusted after (Right limit position set icon) is once pressed, swing to the new position and press (Right limit position set icon).
Red and yellow indication area will be renewed.

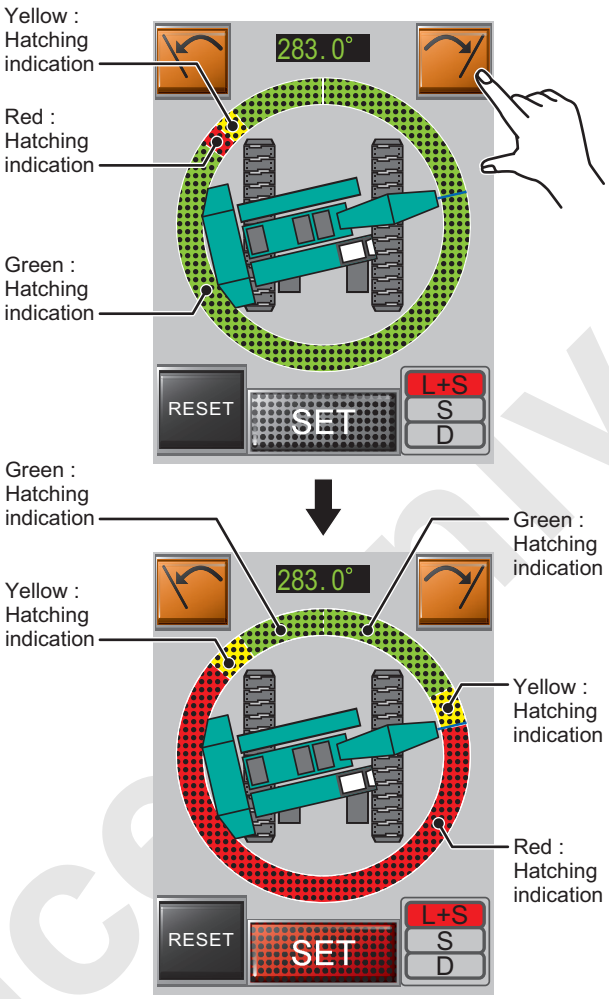

Note

To set the swing area, both side swing limit positions are needed to be set.
In case there is no obstacle on the right side, swing the crane far enough to the position where automatic stop does not disturb crane work and press (Right limit position set icon).

Reference only

(D) After changing the swing mode to the brake mode, press SET (Set icon).
The swing areas setting indication and SET (Set icon) disappears hatching indication and setting is now completed.
The mode selected becomes effective (Indication, alarming and stopping).

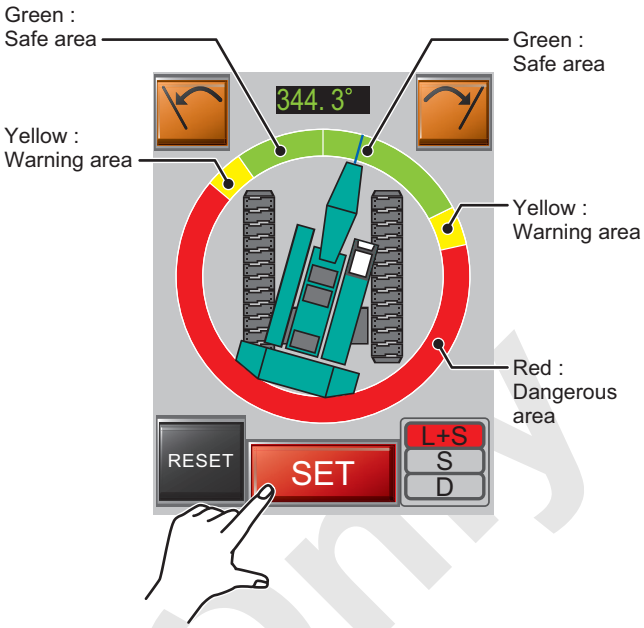

WARNING

With the hatching indication just after engine start, limit function does not work and swing motion is free.
If the limit function is necessary, ensure to set the limit area.
Failure to observe this precaution may result in a serious accident.

Note

It is also possible to set the limit position from the right side first and to the left side.

Note

Even press SET (Set icon) without changing the swing mode to the brake mode, mode setting cannot be made.
Ensure to change to the brake mode and then press SET (Set icon) again.

Reference Only

(2) In case of restart of the engine after setting completed

(A) Swing area setting indication and SET (Set icon) with hatching are displayed.

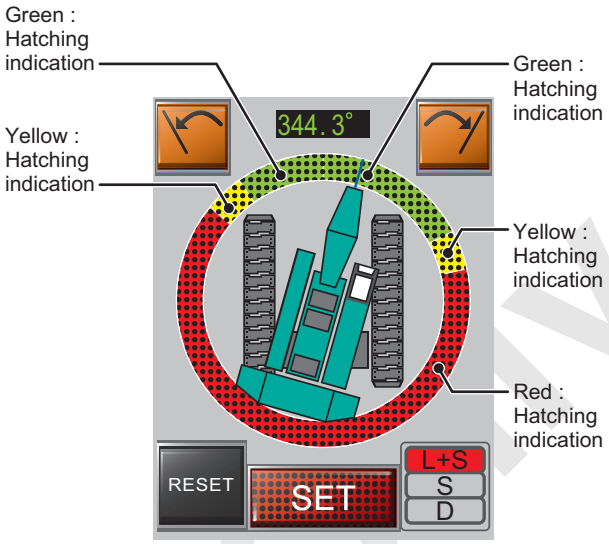

(B) If adjustment of area is not necessary, press SET (Set icon).
The swing areas setting indication and SET (Set icon) disappears hatching indication and setting is now completed.

(C) To reset the area again, press RESET (Reset icon).

(D) The swing area setting indication will be green hatching indication on whole circumference appears due to the limit setting is not made and limit function is not effective yet.

(E) Set swing areas as same method as initial setting.

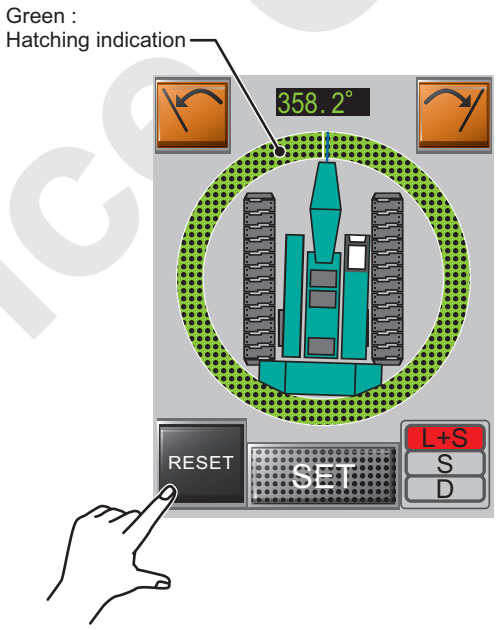

WARNING

With the hatching indication just after engine start, limit function does not work and swing motion is free. If the limit function is necessary, press the SET (Set icon).
Failure to observe this precaution may result in a serious accident.

Reference Only

(3) In case crane traveled

(A) The swing area limit function will be released at the moment when the travel control lever is operated and the swing areas setting indication and SET (Set icon) appears hatching indication.

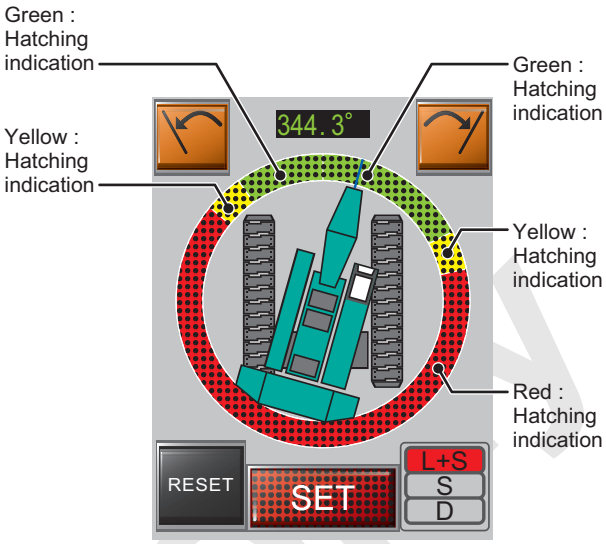

(B) To resetting, press RESET (Reset icon).

(C) The swing area setting indication will be green hatching indication on whole circumference appears due to the limit setting is not made.

(D) Set swing areas as same method as initial setting.

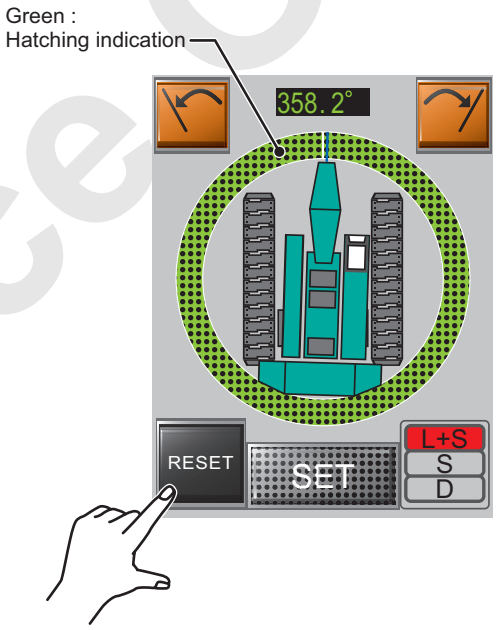

CAUTION

If the crane travels, relative positions with obstacle are changed.
Be sure to set again.

Reference Only

(4) To temporary cancel the limits

(A) When press the SET (Set icon) once, the swing areas setting indication and SET (Set icon) appears hatching indication.
In this condition, the swing motion can be operated freely due to the swing area limit function becomes ineffective.

(B) In order to resume swing area limit function, press SET (Set icon) once again.
The swing areas setting indication and SET (Set icon) disappears hatching indication and swing area limit function becomes effective.

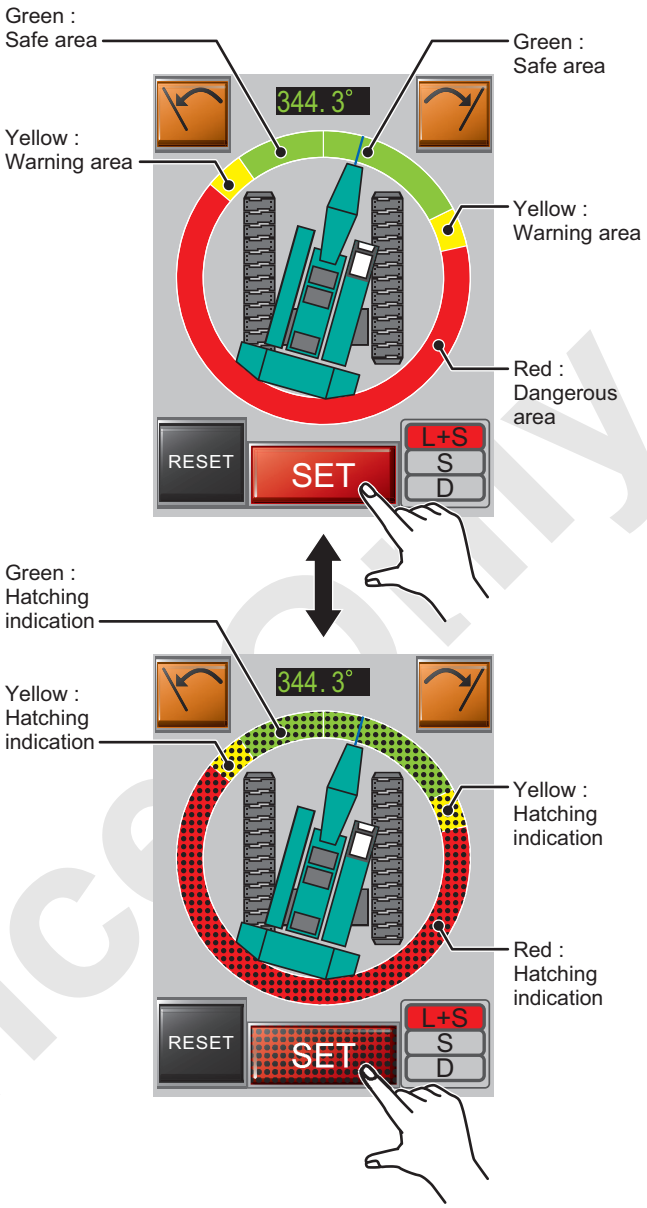

Reference only

5. Function

Function of L+S mode is explained here as an example.

(1) Figure right shows that the crane is in safe area after setting a limit area.

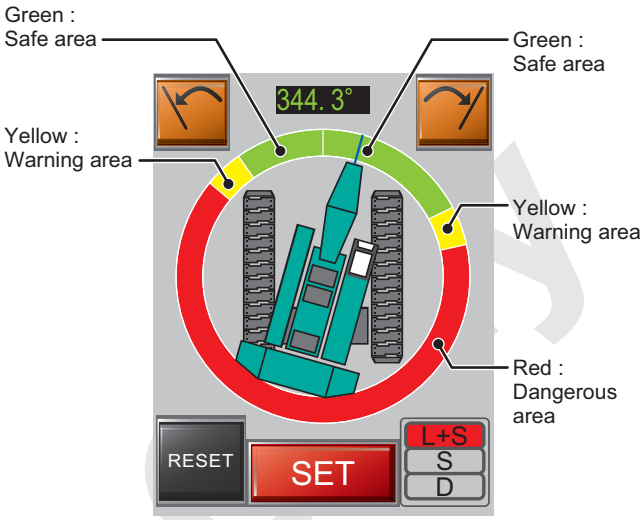

(2) From this condition, if the crane swings to the right, crane figure turns right.

* Only in case of L+S mode, swing speed is reduced to 1/3 of normal speed to reduce shock at the time of stop.

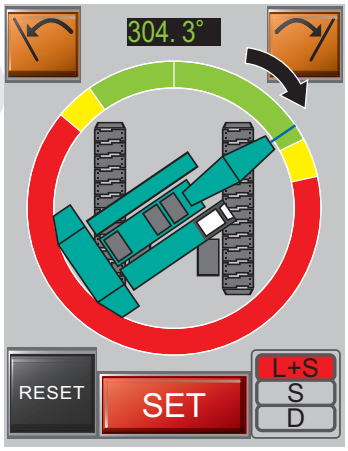

(3) Swing to right direction further and the tip of boom in the swing area limit indication enters into warning area (Yellow), intermittent buzzer sound is issued.
In this situation, reduce the swing speed by taking with reducing engine speed and/or adjusting control lever.
The intermittent buzzer sound becomes higher pitch when comes closer to the dangerous area (Red).
The warning area (Yellow) is the range of 10 degrees before entering the dangerous area (Red).

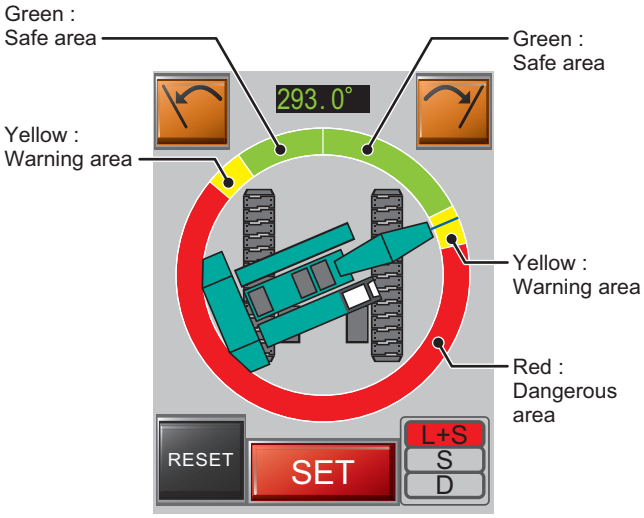

Reference only

(4) Swing to right direction further and the tip of boom in the swing area limit indication enters into dangerous area (Red), continuous buzzer sound is issued and the swing motion stops.

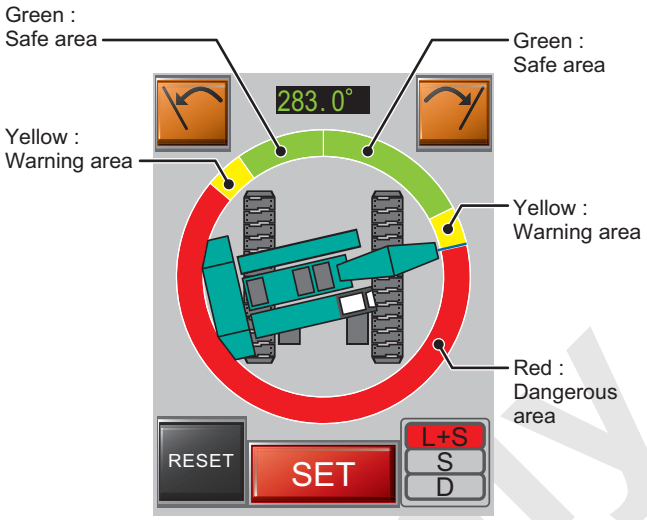

(5) After swing motion stops, swing to safe direction (left) and the tip of boom returns to safe area (Green).

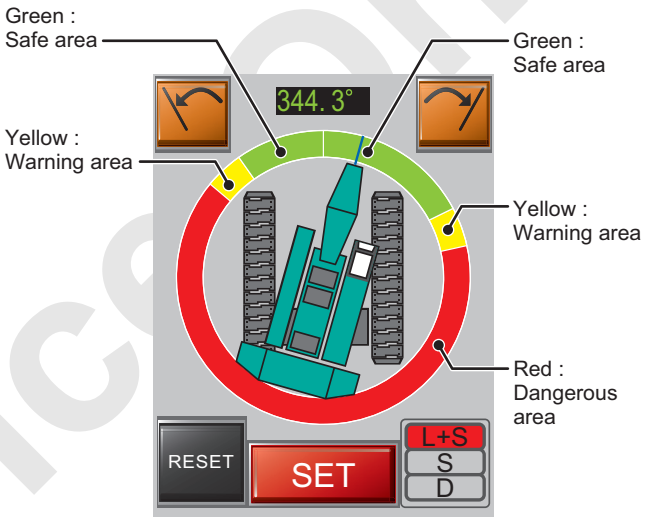

(6) If the crane swing to left, directions (1) to (5) become opposite.

* Caution on indication
Issuing timing of intermittent and continuous buzzer (auto stop) sounds may slightly shift from the appearance of timing when the color on circumference changes, therefore, swinging is to be performed with sufficient time.

Reference Only

3.7 LOAD HISTORY (DATA LOGGER)

This machine is provided with the recording function of the machine condition in order to make investigation when necessary.

Reference Only

3.8 FUNCTION OF GROUND INCLINE INDICATOR (OPTION)

1. Introduction

This device is to detect inclination of the crane against the ground to indicate and issue warning.
Improve ground condition enough for crane work so that warning from this device will not be issued.

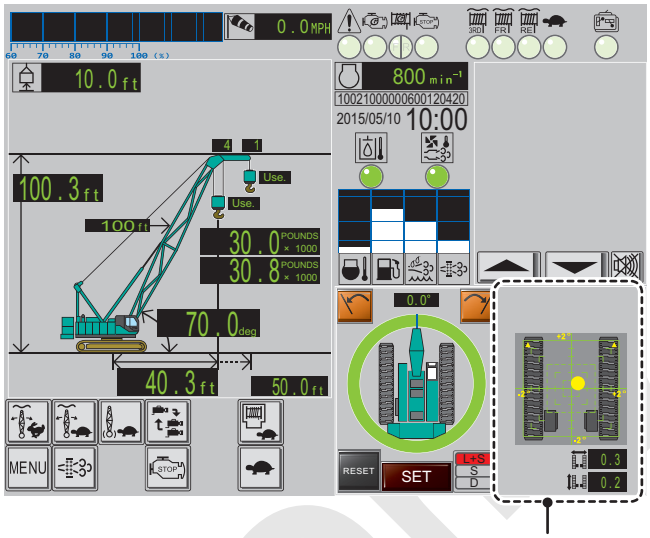

GROUND INCLINE INDICATOR

WARNING

Periodical check should be performed to confirm error between actual indicated value and the level gauge at crane lower frame.
If the error becomes large, adjustment is necessary.
Contact authorized Manitowoc distributor.

Machine equipped with this option has the monitor indication on its right lower part of the screen.

2. Indicator

The above figure indicates example of condition that Left rear side is lower.

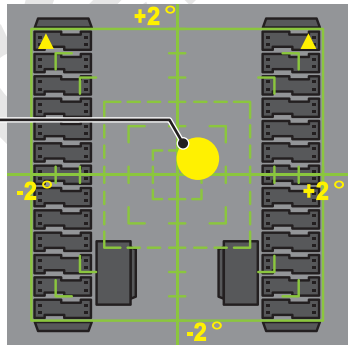

(A) Inclination condition indication

(B) Inclination on lateral direction

(C) Inclination on front-rear direction

(A) Inclination condition indication	The same display as the bubble position of the a level.
(B) Inclination on lateral direction	Right lower : Minus figure Left lower : Plus figure
(C) Inclination on front-rear direction	Front lower : Minus figure Rear lower : Plus figure

Reference Only

3. Display and action at danger

The above figure indicates example of condition that right rear part is lower.
Any of front/rear or right/left indication exceeds ±0.5 degrees, warning is indicated.
This function issues only indication and the crane work will not stop.
Check the crane condition and press (OK) button.
Warning indication disappears.
If indication appears before starting work or without load lifting, ground improvement is recommend.
Improve the ground so that the indication becomes within ±0.5 degrees at any condition.

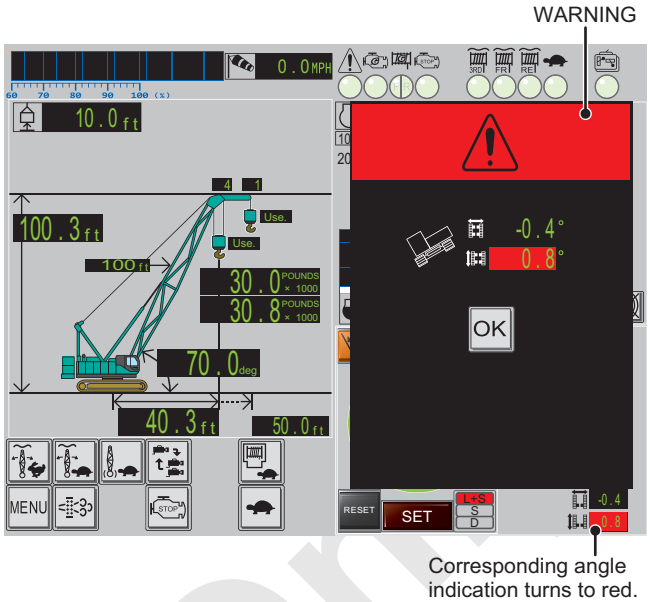

Reference Only

3.9 WARNING AND AUTO-STOP

3.9.1 CONTENT OF WARNING AND AUTO-STOP

When the machine condition becomes closer to danger situation, alarm is issued and machine stops automatically. (See table below)
When the machine stops automatically, operate the machine toward safety side immediately.

CRANE

Hazardous conditions	Color change in indicator								Code display *2	Buzzer		Auto-stop
	(1) Boom angle	(2) Load ratio	(3) Actual load	(4) Rated load	(5) Work radius	(6) Hook	(7) Boom	(8) Back-stop		Overload warning buzzer	Overhoist warning buzzer	
Load ratio more than 90%	–	Yellow	–	–	–	–	–	–	ME024	Intermittent	–	–
Load ratio more than 100%	–	Red	–	–	–	–	Red	–	ME005	Continuous	–	Stop
Main hook overhoist	–	–	–	–	–	Red	–	–	ME017 *3	–	Continuous *1	Stop
Aux. hook overhoist	–	–	–	–	–	Red	–	–	ME018 *3	–	Continuous *1	Stop
Boom overhoist	Red	–	–	–	–	–	Red	–	ME008	–	Continuous *1	Stop
Boom overhoist (Limit)	Red	–	–	–	Red	–	Red	Red	ME021	–	Continuous	Stop
Boom overhoist (Backstop No.2)	Red	–	–	–	Red	–	Red	Red	ME060	–	Continuous	Stop
Boom overlowering	Red	–	– – –	0.0	Red	–	Red	–	ME007	Continuous	–	Stop

*1 Only when operated toward danger side.
*2 See this article “3.13 WARNING CODE LIST AND CONDITION, ACTION” detail of display code.
*3 The message “ME017” and “ME018” change places depending on the attachments configuration.

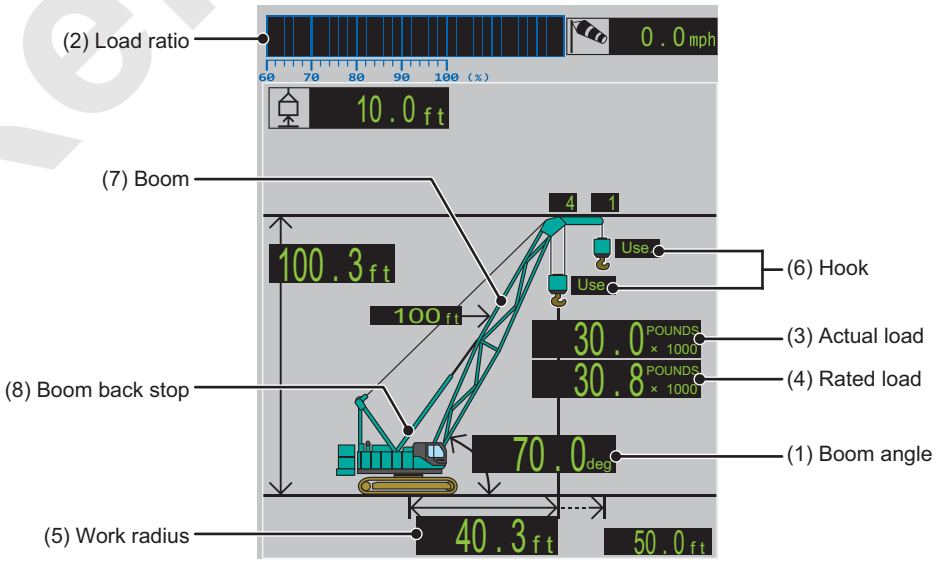

Reference Only

3.9.2 CONTENT OF AUTO-STOP

When the machine stops on each danger condition, machine does not move to "X" direction on the following figures.
Direction without "X" mark is safety side and machine moves without handling the release switch.

1. IN CASE OF CRANE

(1) Overload

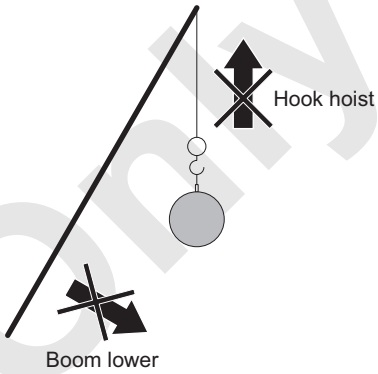

(2) Hook overhoist
Boom overlowering

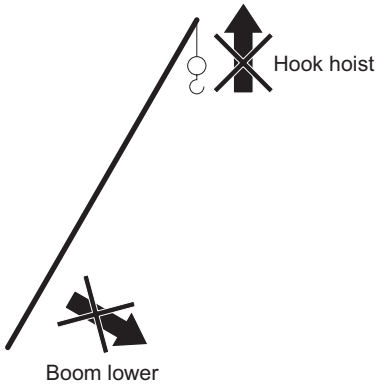

(3) Boom overhoist

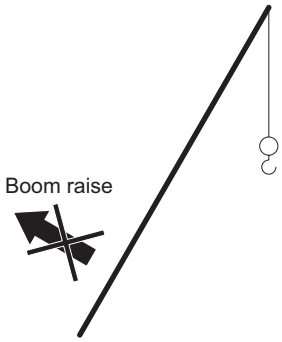

(4) Boom overhoist
(Final stop limit switch control)

Normally when boom overhoist occurs, controller functions to stop automatically.
If auto-stop function is being released and operated, the final stop limit switch control becomes actuated and machine auto-stops.
In this case, auto-stop can not be released.

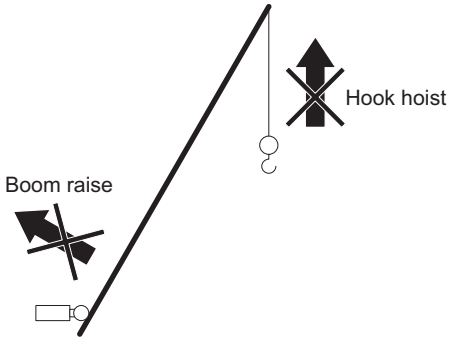

Reference Only

3.9.3 RELEASING AUTO-STOP

DANGER

Never operate the crane with respective auto-stop release switches and its master keys in the "RELEASE" position.
These switches and keys must be used for the case of emergency evacuation when failure of safety device or maintenance purpose.
Failure to observe this precaution may result in a serious accident.

1. Auto-stop release switch

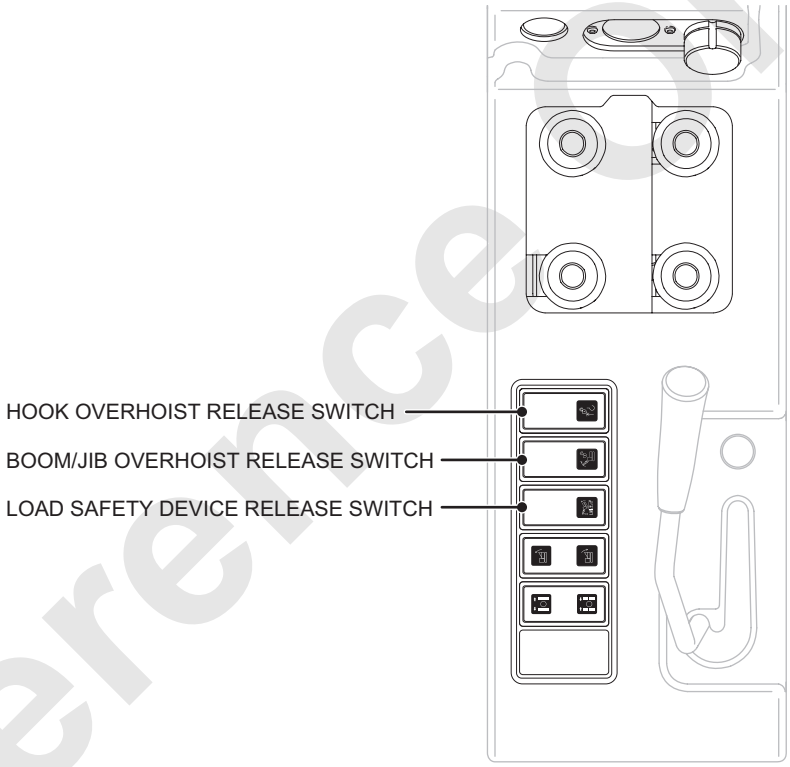

LEFT SIDE PANEL

Reference Only

2. Handling procedure of auto-stop release switch

Use this switch only when auto-stop function must be released at the case of emergency or maintenance work.
Each release switches would not be released unless otherwise “RELEASE SWITCH MASTER KEY” is in release position.

(1) RELEASE SWITCH MASTER KEY

This is the master key to lock releasing the load safety device, boom overhoist and hook overhoist for safety.

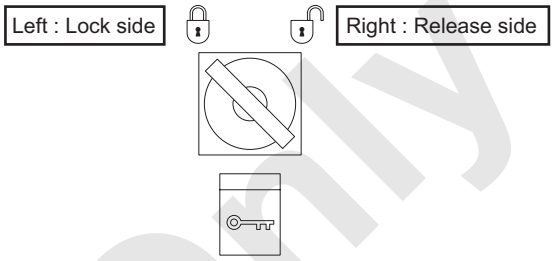

Lock side	Can’t be released the auto-stop functions.
Release side	Can be released the auto-stop functions.

The key can be taken off at the lock position.

CAUTION

During work bypass key must be kept and be controlled by work responsible person.

(2) LOAD SAFETY DEVICE RELEASE SWITCH

This switch is for release the over load prevention function temporally.
This switch is to be used only in case of the operation has to be made due to the emergency case and/or maintenance work.

This switch is functional only when “RELEASE SWITCH MASTER KEY” is turned to release side.

Only while the switch is in release side, the auto stop due to the over load and exceeding the work radius can be released.

Switch returns automatically to original position when hand is released.

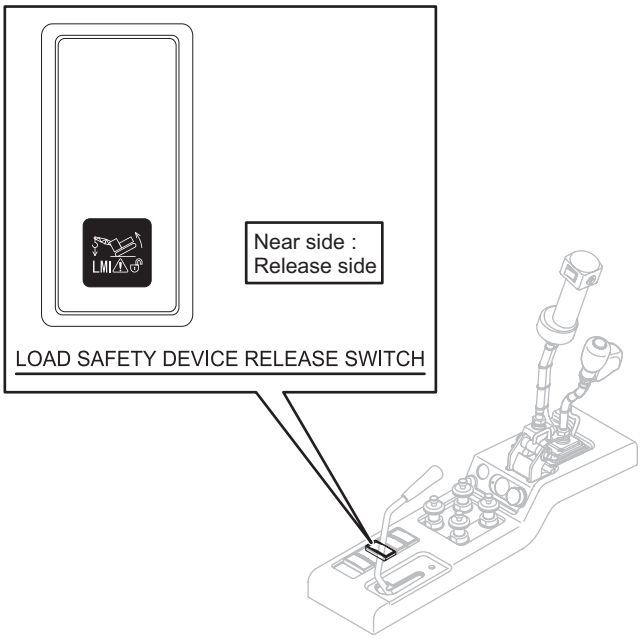

Reference Only

(3) BOOM, JIB OVERHOIST RELEASE SWITCH

This switch is for release the boom/jib overhoist prevention function temporally.
This switch is to be used only in case of the operation has to be made due to the emergency case and/or maintenance work.

This switch is functional only when “RELEASE SWITCH MASTER KEY” is turned to release side.

Only while the switch is in release side, the auto stop due to the over load and exceeding the work radius can be released.

Switch returns automatically to original position when hand is released.

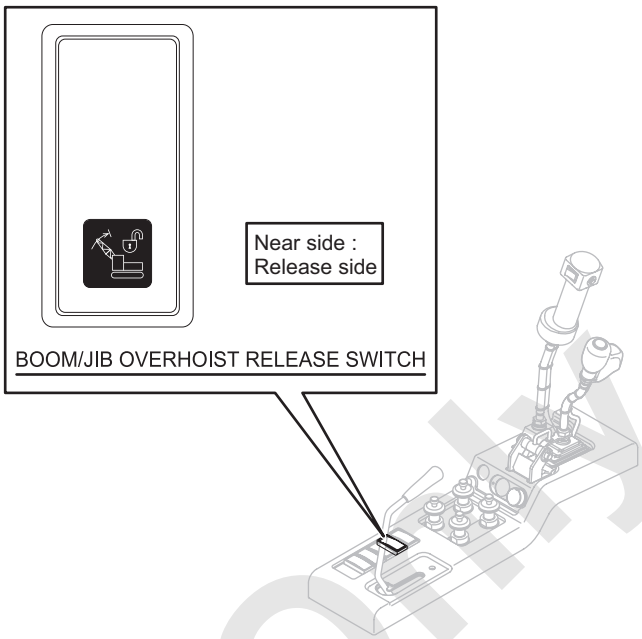

(4) HOOK OVERHOIST RELEASE SWITCH

This switch is for release the hook overhoist prevention function temporally.
This switch is to be used only in case of the operation has to be made due to the emergency case and/or maintenance work.

This switch is functional only when “RELEASE SWITCH MASTER KEY” is turned to release side.

Only while the switch is in release side, the auto stop due to the over load and exceeding the work radius can be released.

Switch returns automatically to original position when hand is released.

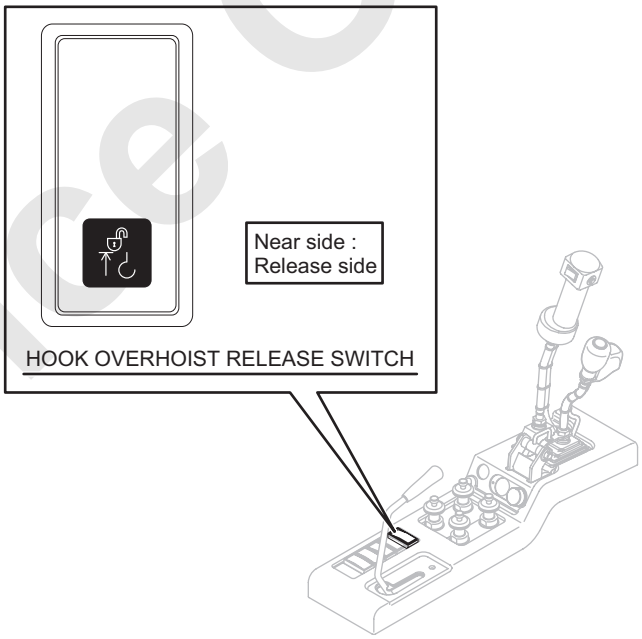

⚠ CAUTION

When release the auto-stop function, hold the switch by hand at release side.
When leave the hand, the switch returns original position and auto-stop function resumes.

⚠ CAUTION

When the auto-stop function is to be released, ensure to use the corresponding release switch.

Reference Only

3. Handling at boom stowing

(1) Lower the boom until auto-stop occurs.
When the boom automatically stops, indicate warning code [ME007] on the monitor display.

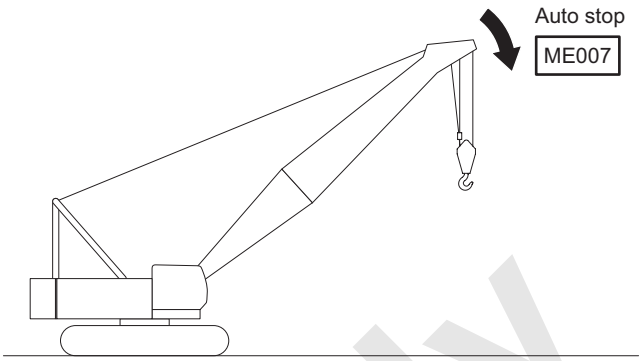

(2) When the crane auto-stops, press (Boom, jib lowering icon) in the monitor for more than 1 second.
The crane is turned to boom lowering mode and auto-stop is released and boom lowering becomes possible.

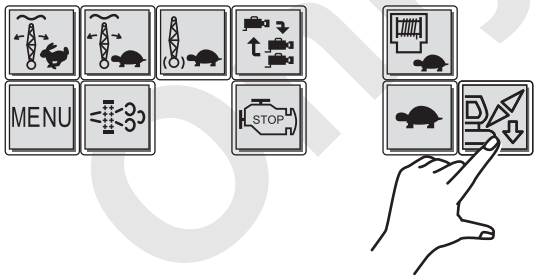

Auto stop is released

Note

Press (assy/disassy icon), (boom, jib lowering icon) for more than 1 second.

(3) However when the weight of hook overhoist limit switch contacts the ground, auto-stop occurs due to hook overhoist preventive device.
When the boom automatically stops, indicate warning code [ME017] on the monitor display.

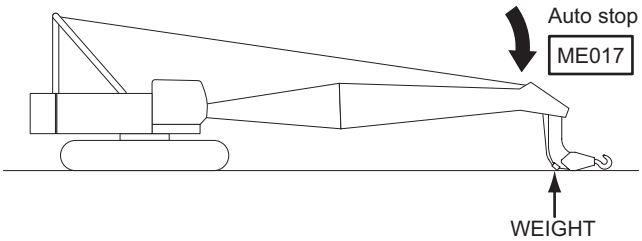

(4) To lower the boom further, return the control lever to neutral once and press (assy/disassy icon) for one time (1 second).
Then the crane turns to assy/disassy mode and auto-stop due to hook overhoist is released and boom lowering becomes possible.

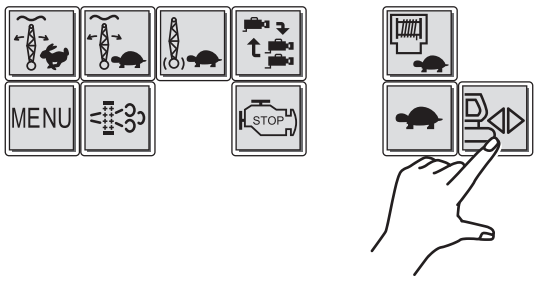

Auto stop is released

Note

Press (assy/disassy icon), (boom, jib lowering icon) for more than 1 second.

Reference Only

4. Auto-stop releasing at boom assembly or disassembly work

When load safety device, angle detector or hook overhoist limit switch are not connected such as base machinery or attachment assembly or disassembly work, auto-stop due to load safety device or hook overhoist preventive device occurs or alarm is issued.

By pressing icon, load safety device turns to assy/disassy mode and auto-stop and alarm sound are released.
When crane turns to assy/ disassy mode, load safety device indication becomes only boom angle indication and caution message indication.

After assembly/disassembly work is completed and boom is to be erected, press icon once again.
Then the crane turns to work mode.
If the boom is erected without changing to work mode, crane is turned to work mode automatically when the boom angle exceed about 15 degrees (for tower 40 degrees).
Therefore when the boom is erected, crane does not turn to assy/disassy mode even pressing the icon.
Assy/disassy mode is cancelled when the main key switch is turned to “OFF” position.
Therefore ensure to press icon again whenever the main key switch is turned ON.

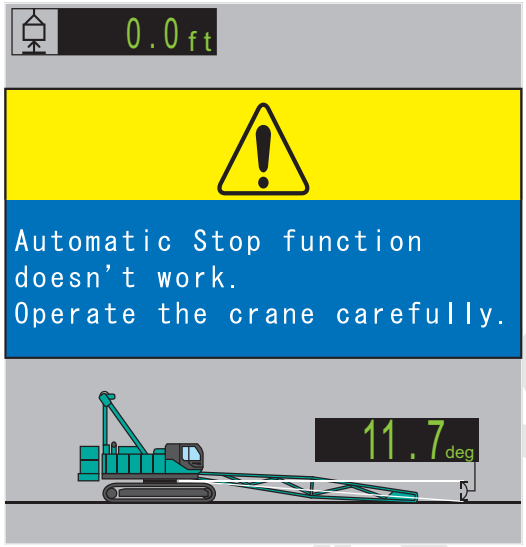

Note

Press (assy/disassy icon), (boom, jib lowering icon) for more than 1 second.

Note

When the boom angle is being high or the load is detecting by the load cell, the assy/disassy mode cannot be set.
When the boom is raised after the assembly, assy/disassy mode will be released.

Reference Only

5. Stop release mode when transportation with boom base attached.
(Only machine with reduced weight specification)

For machine with the reduced weight specification, counterweight is not installed during transportation. Therefore the machine becomes transportation mode unless the machine is out of the work mode applicable range shown in “4. Auto-stop releasing at boom assembly or disassembly work” and crane work configuration, tower work configuration.

When the machine becomes transportation mode, the monitor of the load safety device displays message requesting weight installation, detector connection and angle display.

Under the transportation mode, front drum, rear drum and third drum winches become auto-stop condition for both hoisting and lowering motion and only boom drum becomes functional for raising and lowering.
Machine can move to other mode either by lowering boom angle to work mode range shown in “4. Auto-stop releasing at boom assembly or disassembly work” or by installing the required counterweight and connecting the detector.

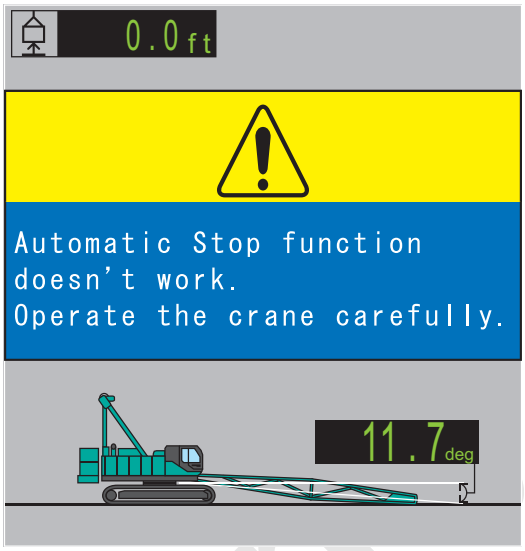

Note

If the counterweight detector is removed under the crane work configuration (or under luffing work configuration), the machine becomes all stop condition rather than transportation mode.
When the machine becomes under all stop condition, install the weight detector once again and when machine becomes safe disassembling condition then remove the weight detector.

Reference Only

3.10 INSPECTION

3.10.1 INSPECTION PROCEDURE WHEN ERECTING THE BOOM AFTER THE ATTACHMENT ASSEMBLY WORK IS COMPLETED

After the attachment assembly work is completed, check the function of safety related devices and make sure that there is no abnormality before erecting the boom.
At the inspection, limit switch may have already been actuated.
Pull the limit switch once and set it to safe condition and then inspect as follows;

CRANE ATTACHMENT

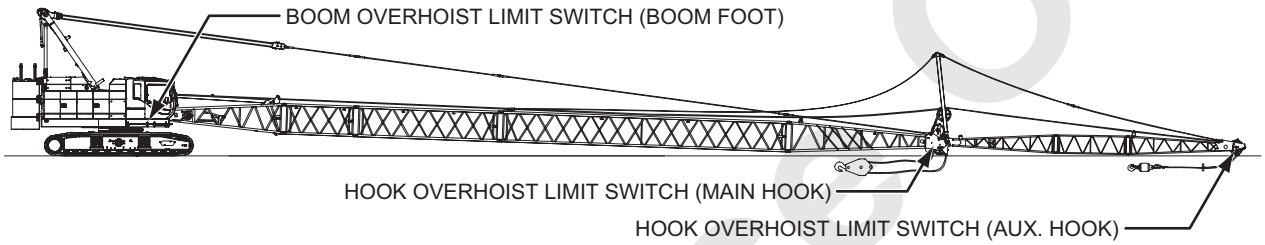

1. Inspection of boom overhoist limit switch

(1) Press the limit switch (final stop) roller located on the right hand boom foot by hand.
(2) Confirm if the indication of boom angle, work radius, boom and backstop figures turns to red color and display “ME021” warning message on the load safety device display area in the monitor.

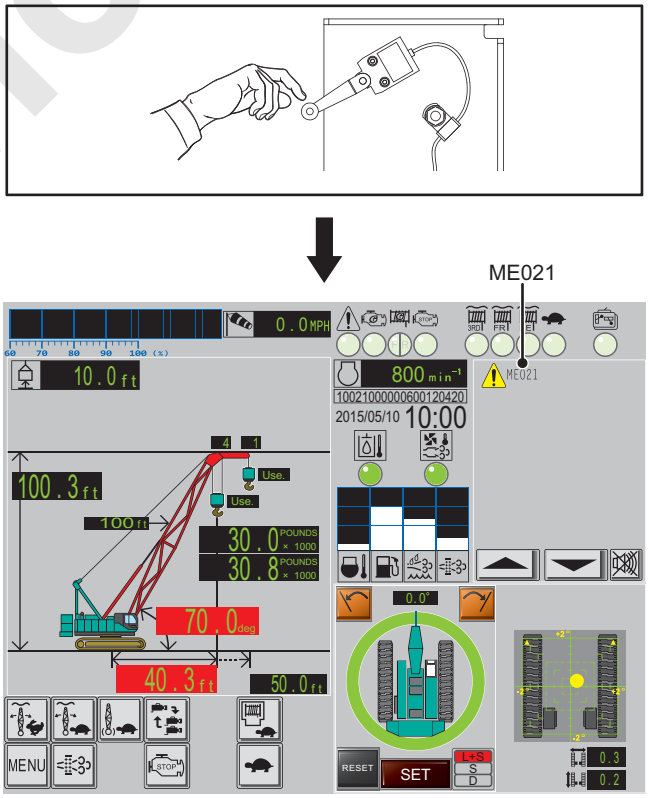

Reference Only

2. Inspection of main hook overhoist limit switch

(1) Lift up the limit switch weight hanging rope.
(2) Confirm if the indication of main hook figure turns to red color and display “ME017” warning message on the load safety device display area in the monitor.
(3) After that pull the hanging rope and confirm the warning message will be disappeared.

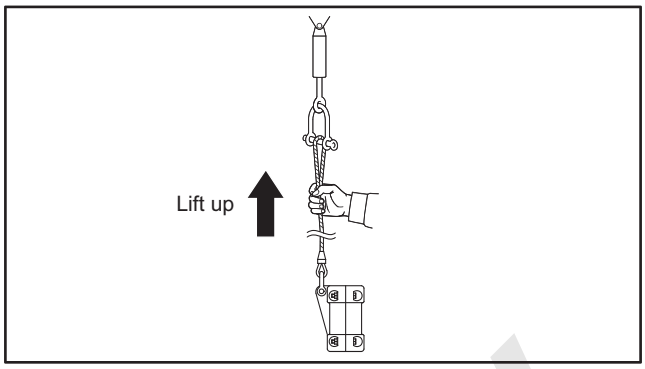

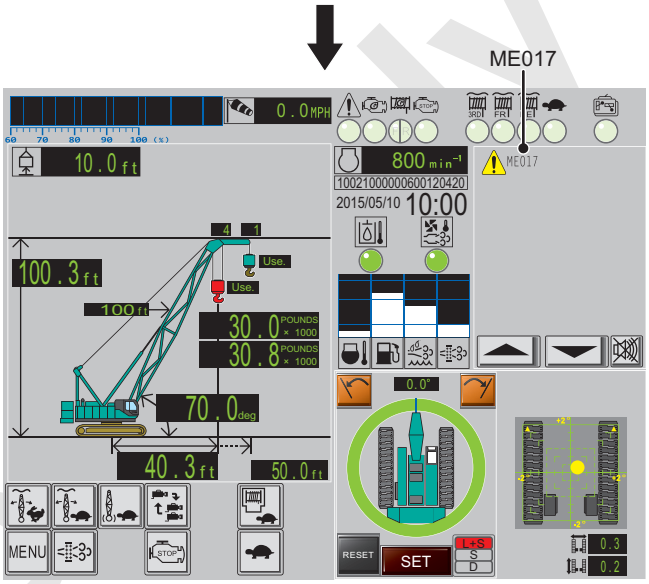

3. Inspection of auxiliary hook overhoist limit switch

(1) Lift up the limit switch weight hanging rope.
(2) Confirm if the indication of auxiliary hook figure turns to red color and display “ME017” warning message on the load safety device display area in the monitor.
(3) After that pull the hanging rope and confirm the warning message will be disappeared.

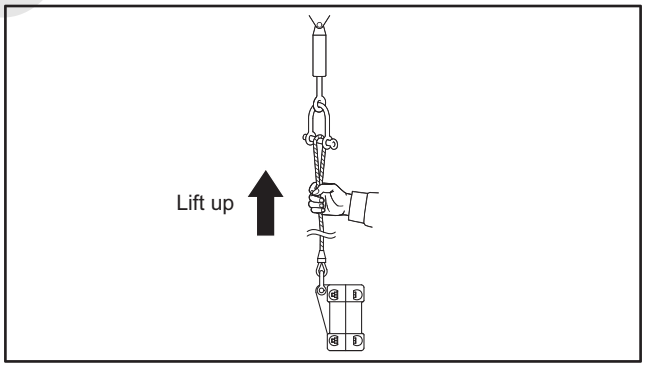

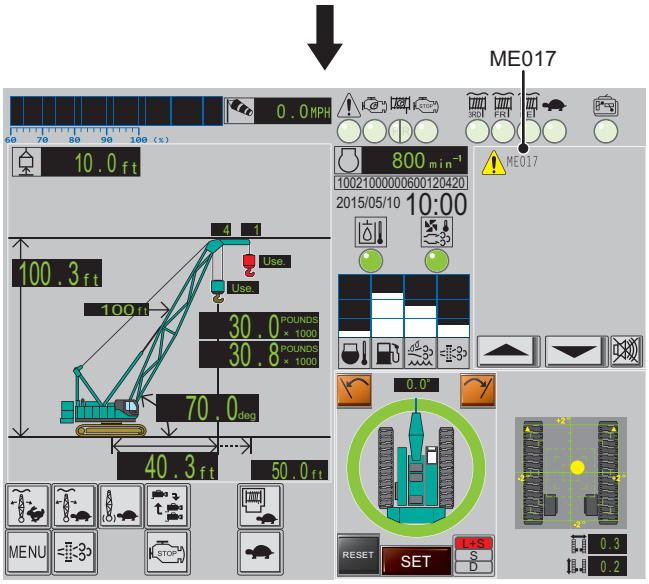

Reference only

3.10.2 INSPECTION AFTER ERECTING ATTACHMENT

Check to see that there is no abnormality of auto-stop, alarming functions and display indication.
Auto-stop angle on boom overhoist side is as shown on the table below.
Auto-stop angle on boom overlowering side (work radius exceeding) varies depending on boom length.

Attachment	Type of overhoist	Stop type	Auto-stop angle
Crane	Boom overhoist	Controller (angle against ground)	82 degrees to 82.5 degrees
		Limit switch (angle against machine)	84.5 degrees to 85.5 degrees

INSPECTION OF OVERLOAD (LOAD SAFETY DEVICE) WITH THE MONITOR

If it is difficult to test auto-stop function due to overload by lifting the actual load, check can be done in the display.
Perform this test in “WORK” position.
The test will not work in assembly/disassembly mode.

(1) Press MENU icon to indicate menu and press CHECK.

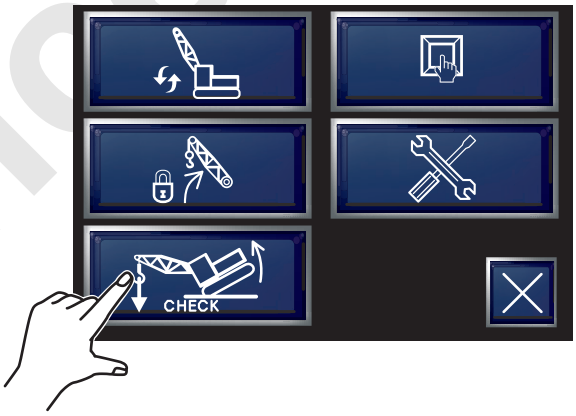

(2) Press OFF icon.

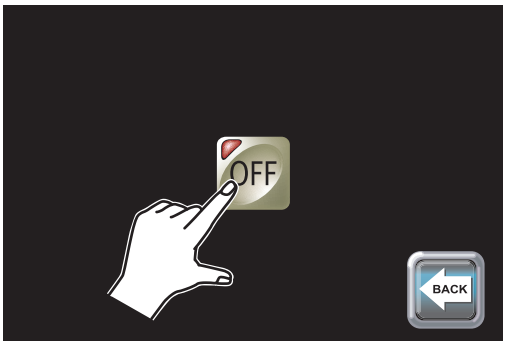

Reference Only

(3) The crane turns to the simulated overload condition and auto-stop occurs.
(Overload check mode)
Check to see that hook hoisting or boom lowering can not be done.

During check mode, message “ME056” appears in the message area.

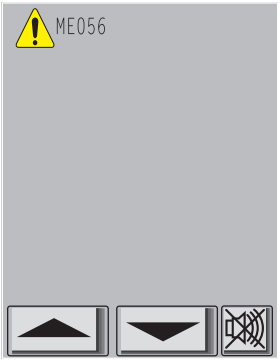

(4) After motion check, press icon. Check mode is completed.

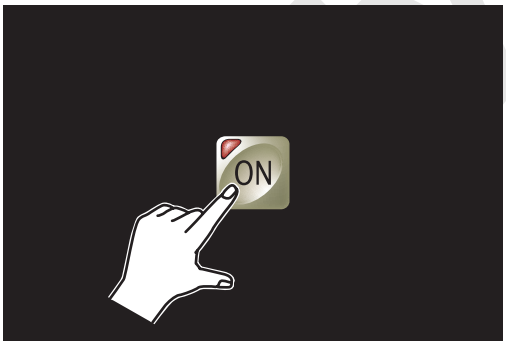

Reference Only

3.11 CAUTIONS IN HANDLING LOAD SAFETY DEVICE

1. Welding work

   When welding to machine, stop the engine and turns the key switch to OFF.
   For further, disconnect all the connectors on the backside of the monitor and controller.

2. Radio wave interference

   If the radio wave interference is received from the near radio station, contact Manitowoc service shop.

3. Static electricity interference

   If the monitor surface is rubbed strongly with dry nylon cloth etc. static electricity may be generated.
   This static electricity has harmful effect to the monitor function.
   Do not rub strongly.

Reference Only

3.12 ERROR CODE DISPLAY AND MESSAGE

Explain the error codes and message when abnormality occurs here in after.

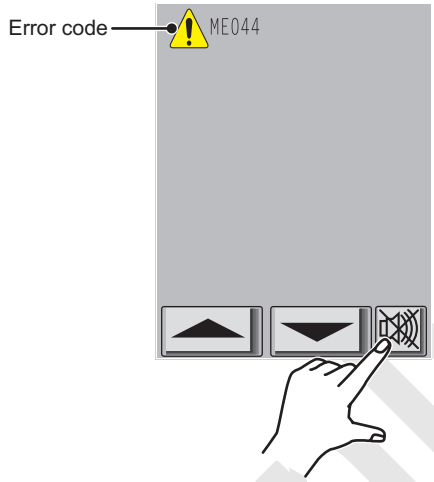

- When abnormality occurs, its error code is indicated in the message indication area and buzzer sounds.
  Buzzer can be stopped by pressing the buzzer stop icon in the message indication area.
  In addition when error code of the load detector or angle detector appears, the machine stop automatically.
- Whenever indicate the error code (error message) in the monitor display, contact with an authorized Manitowoc distributor.

Note

When the angle detector is replaced, adjustment of the load safety device becomes necessary. Contact authorized Manitowoc distributor for replacement or adjustment.

- Normally error is indicated by its code.
  By pressing the indicated code area, detail can be displayed.
  In the message indication area can be displayed up to 12 error codes and if more than 12 error are existing, additional errors can be seen by pressing "△" or "▽" (display switching).

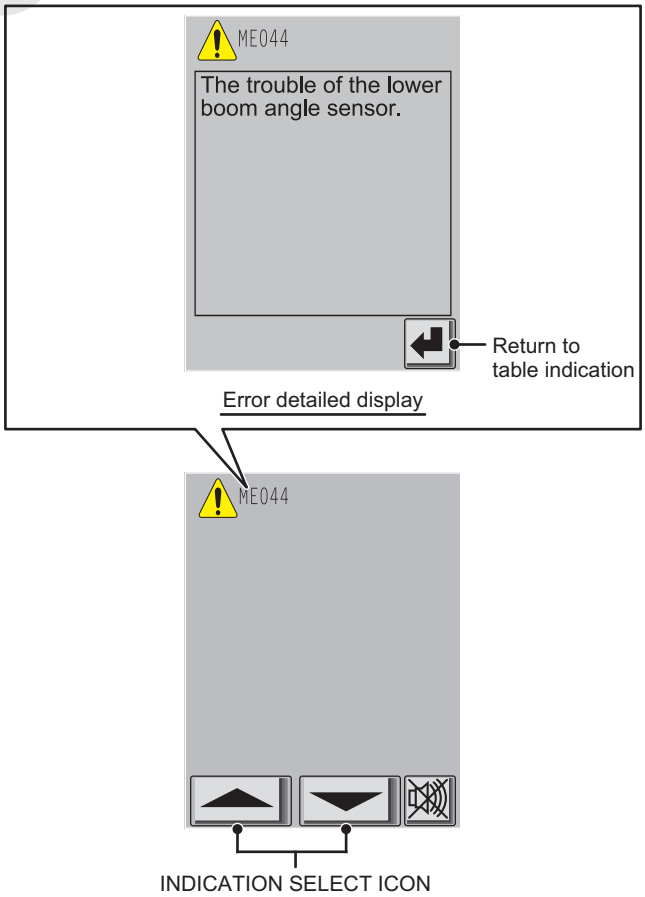

Note

Following code list shown all of codes and some of codes would not be indicated depending on the model.

Reference Only

ERROR CODE (ERROR MESSAGE) LIST

Code	Message
B2799	Immobilizer communication abnormal
B279A	Immobilizer communication abnormal
B279C	This engine ECU is not support for immobilizer system
P0006	Fuel cut valve failure (GND short circuit)
P0007	Fuel cut valve failure (Open/+B short circuit)
P0016	Crankshaft position sensor and cam-shaft position sensor - rationality
P0045	VNT actuator failure.
P0049	Turbo charger revolution overrun
P007B	Intake air temperature sensor (inter-cooler outlet) - rationality
P007C	Intake air temperature sensor (inter-cooler outlet) - out of range (Out of range low)
P007D	Intake air temperature sensor (inter-cooler outlet) - out of range (Out of range high)
P0087	Common rail pressure control failure.
P0088	Common rail pressure control failure.
P0093	Fuel leakage
P0096	Intake air temperature sensor (intake manifold) - rationality
P0097	Intake air temperature sensor (intake manifold) - out of range (Out of range low)
P0098	Intake air temperature sensor (intake manifold) - out of range (Out of range high)
P00AF	VNT actuator failure.
P0101	Air flow sensor - rationality
P0102	Air-flow sensor failure (Low)
P0103	Air-flow sensor failure (High)
P0104	Air flow sensor - out of range
P0106	Boost pressure sensor - rationality
P0108	Boost pressure sensor - out of range (Out of range high)
P0112	Intake air temperature sensor (air flow sensor built-in) - out of range (Out of range low)
P0113	Intake air temperature sensor (air flow sensor built-in) - out of range (Out of range high)
P0116	Engine coolant temperature sensor - rationality
P0117	Engine coolant temperature sensor - out of range (Out of range low)
P0118	Engine coolant temperature sensor - out of range (Out of range high)
P011C	Intake air temperature sensor (air flow sensor built-in) - rationality
P0122	Intake throttle valve-opening sensor 1 out of range (Out of range low)
P0123	Intake throttle valve position sensor 1 - out of range (Out of range high)
P0128	Thermostat - The coolant temperature does not reach a warmed-up temperature
P0130	O2 sensor (SCR inlet) failure
P0136	O2 sensor (SCR outlet) failure
P0182	Fuel Temp. sensor failure (Low)
P0183	Fuel Temp. sensor failure (High)
P0187	Fuel Temp. sensor failure (Low)
P0188	Fuel Temp. sensor failure (High)
P0191	Common rail pressure sensor malfunction
P0192	Common rail pressure sensor (main) - out of range (Out of range low)

Reference Only

ERROR CODE (ERROR MESSAGE) LIST

Code	Message
P0193	Common rail pressure sensor (main) - out of range (Out of range high)
P0200	Engine ECU failure.
P0201	Fuel injector - disconnection (#1cyl)
P0202	Fuel injector - disconnection (#2cyl)
P0203	Fuel injector - disconnection (#3cyl)
P0204	Fuel injector - disconnection (#4cyl)
P0205	Fuel injector - disconnection (#5cyl)
P0206	Fuel injector - disconnection (#6cyl)
P0217	Overheat
P0219	Engine overrun.
P0222	Intake throttle valve position sensor 2 - out of range (Out of range low)
P0223	Intake throttle valve position sensor 2 - out of range (Out of range high)
P0234	Over boost
P0237	Boost pressure sensor - out of range (Out of range low)
P0263	Correction quantity of cylinders #1 error
P0266	Correction quantity of cylinders #2 error
P0269	Correction quantity of cylinders #3 error
P0272	Correction quantity of cylinders #4 error
P0275	Correction quantity of cylinders #5 error
P0278	Correction quantity of cylinders #6 error
P0299	Turbo under boost
P0301	Continuously misfiring (#1cyl)
P0302	Continuously misfiring (#2cyl)
P0303	Continuously misfiring (#3cyl)
P0304	Continuously misfiring (#4cyl)
P0305	Continuously misfiring (#5cyl)
P0306	Continuously misfiring (#6cyl)
P0335	Crankshaft position sensor - disconnection
P0336	Crankshaft position sensor - rationality
P0340	Camshaft position sensor - rationality
P0341	Camshaft position sensor - rationality
P0381	Glow lamp (wait-to-start lamp) - circuit
P0401	EGR low flow
P0402	EGR high flow
P0404	EGR valve 1 stick
P0405	EGR lift sensor 1 circuit low input
P0406	EGR lift sensor 1 circuit high input
P0407	EGR lift sensor 2 circuit low input
P0408	EGR lift sensor 2 circuit high input
P041B	EGR gas temperature sensor - characteristic failure
P041C	EGR gas temperature sensor - out of range (Out of range low)

Reference Only

ERROR CODE (ERROR MESSAGE) LIST

Code	Message
P041D	EGR gas temperature sensor - out of range (Out of range high)
P0420	Catalyst located downstream of PM filter
P0489	EGR solenoid 1 malfunction
P0490	EGR solenoid 1 malfunction
P0500	Vehicle speed sensor - low
P0501	Vehicle speed sensor - high
P0504	Brake switch correlation
P0510	Idle SW malfunction.
P0519	Idle speed control system
P0524	Engine oil pressure Too Low
P0540	Preheat circuit malfunction
P0545	Exhaust temp. sensor failure (Upper stream) (Low)
P0546	Exhaust temp. sensor failure (Upper stream) (High)
P0562	Sensor supply voltage - out of range (out of range low)
P0563	Sensor supply voltage - out of range (out of range high)
P05F1	Crankcase ventilation system abnormal
P0605	ECU failure
P0606	ECU failure
P0607	ECU failure
P0610	VIN data error
P0611	ECU failure
P0617	Starter switch - rationality
P0628	Suction control valve for fuel supply pump - circuit (Circuit low)
P0629	Suction control valve for fuel supply pump - circuit (Circuit high)
P0642	ECU sensor supply 1 failure (Low)
P0643	ECU sensor supply 1 failure (High)
P064C	Glow control unit malfunction
P0652	ECU sensor supply 2 failure (Low)
P0653	ECU sensor supply 2 failure (High)
P0671	Glow plug 1 failure.
P0672	Glow plug 2 failure.
P0673	Glow plug 5 failure.
P0674	Glow Plug 6 failure.
P0683	Glow controller - Battery for glow controller open, GND short glow controller - glow control signal glow controller - Diagnosis signal
P0686	Main relay malfunction
P06D3	Air flow sensor power supply failure short to GND
P06D4	Air flow sensor power supply failure (High)
P0704	Clutch SW malfunction
P073D	Information abnormal from transmission ECU.
P081A	Starter disable circuit Low

Reference Only

ERROR CODE (ERROR MESSAGE) LIST

Code	Message
P081B	Starter disable circuit High
P0850	Neutral SW failure (MT)
P1062	VNT solenoid valve 2 low voltage
P1063	VNT solenoid valve 2 high voltage
P1067	VNT solenoid valve 3 low voltage
P1068	VNT solenoid valve 3 high voltage
P1071	Turbo speed sensor failure (High)
P1072	Turbo speed sensor failure (Low)
P1132	Acceleration sensor circuit low voltage
P1133	PTO accelerator sensor (Hi)
P1142	Throttle control low voltage
P1143	Throttle control high voltage
P1197	Common rail pressure sensor (sub) - out of range (Out of range low)
P1198	Common rail pressure sensor (sub) - out of range (Out of range high)
P119F	Common rail pressure sensor - rationality
P1211	Fuel injector driver circuit 1 - circuit (Circuit low)
P1212	Fuel injector driver circuit 1 - circuit (Circuit high)
P1214	Fuel injector driver circuit 2 - circuit (Circuit low)
P1215	Fuel injector driver circuit 2 - circuit (Circuit high)
P1229	Excessive supply pump pressure
P1266	Insufficient supply pump pressure
P1401	EGR valve 2 stick
P1402	EGR solenoid 2 malfunction
P1403	EGR solenoid 2 malfunction
P1407	EGR solenoid 3 malfunction
P1408	EGR solenoid 3 malfunction
P1412	Pulse EGR solenoid malfunction
P1413	Pulse EGR solenoid malfunction
P1416	EGR cooler overheat.
P1417	EGR cooler water temp. sensor failure (Low)
P1418	EGR cooler water temp. sensor failure (High)
P141F	Burner system malfunction
P1426	Differential pressure sensor - rationality
P1427	Differential pressure sensor - out of range (Out of range low)
P1428	Differential pressure sensor - out of range (Out of range high)
P1458	EGR actuator malfunction (Slight)
P1459	EGR actuator malfunction (Tertiary)
P1462	Engine retarder1 failure (Open/GND short circuit)
P1463	Engine retarder1 failure (+B short circuit)
P1467	Engine retarder2 failure (Open/GND short circuit)
P1468	Engine retarder2 failure (+B short circuit)

Reference Only

ERROR CODE (ERROR MESSAGE) LIST

Code	Message
P1472	Transmission retarder relay malfunction
P1473	Transmission retarder relay malfunction
P1477	Scanning cruise retarder relay malfunction
P1478	Scanning cruise retarder relay malfunction
P1515	Charge air under coding
P1530	Engine stop switch malfunction
P1565	Cruise switch malfunction
P1601	Fuel injector adjustment data abnormal
P1676	Fuel cut relay failure.
P1681	Exhaust control valve magnetic valve failure.
P1682	Exhaust control valve magnetic valve failure.
P2002	DPR system malfunction
P200C	DPF over temperature
P2032	Exhaust temp. sensor failure (2nd from upper stream) (Low)
P2033	Exhaust temp. sensor failure (2nd from upper stream) (High)
P203F	Urea tank level warning
P204F	Urea SCR system failure
P207F	Urea quality error
P2080	Exhaust temp. sensor failure (Upper stream) - rationality
P2084	Exhaust temp. sensor failure (2nd from upper stream) - rationality
P20CD	Fuel additives valve failure (Low)
P20CE	Fuel additives valve failure (High)
P20CF	Fuel additives valve characteristic abnormal
P20EE	NOx converting catalyst conversion efficiency
P2100	Intake throttle valve DC motor failure.
P2101	Intake throttle valve - functional
P2103	Intake throttle valve DC motor failure.
P2120	Throttle/Pedal Position Sensor/Switch D “Circuit”
P2121	Accelerator sensor 1 voltage abnormal
P2122	Accelerator pedal position sensor 1 -out of range (Out of range low)
P2123	Accelerator pedal position sensor 1 -out of range (Out of range high)
P2126	Accelerator sensor 2 voltage abnormal
P2127	Accelerator pedal position sensor 2 -out of range (Out of range low)
P2128	Accelerator pedal position sensor 2 -out of range (Out of range high)
P2135	Intake throttle valve position sensor - rationality
P2138	Accelerator pedal position sensor - rationality
P2200	NOX sensor (SCR inlet) failure
P2205	NOX sensor (SCR inlet) heater failure
P2213	NOX sensor (SCR outlet) failure
P2214	SCR outlet NOX sensor characteristic abnormal
P2215	NOX sensor (SCR outlet) Heater failure

Reference Only

ERROR CODE (ERROR MESSAGE) LIST

Code	Message
P2227	Barometric pressure sensor - rationality
P2228	Barometric pressure sensor - out of range (out of range low)
P2229	Barometric pressure sensor - out of range (out of range high)
P2269	Water in fuel condition warning
P226C	VGT slow response
P240F	EGR flow slow response
P2428	ATC over heat
P242B	Exhaust temp. sensor failure (3rd from upper stream) - rationality
P242C	Exhaust temp. sensor failure (3rd from upper stream) (Low)
P242D	Exhaust temp. sensor failure (3rd from upper stream) (High)
P244A	DPR pressure difference (Low)
P244B	DPR pressure difference (High)
P244F	DOC Temp. failure
P2457	EGR cooler performance down
P2458	DPR manual regeneration error
P2459	DPR regeneration frequency abnormal
P2463	DPR regeneration operation error
P246F	Exhaust gas temperature sensor (DOC outlet) - rationality
P2470	Exhaust gas temperature sensor (DOC outlet) - out of range (Out of range low)
P2471	Exhaust gas temperature sensor (DOC outlet) - out of range (Out of range high)
P2481	Exhaust temp. sensor failure (4th from upper stream) (Low)
P2482	Exhaust temp. sensor failure (4th from upper stream) (High)
P2483	Exhaust temp. sensor failure (4th from upper stream) - rationality
P24A2	DPR fuel additive quantity too much
P2633	Fuel pump Magnetic valve 2 failure (OPEN/GND short circuit)
P2634	Fuel pump Magnetic valve 2 failure (+B short circuit)
P2635	Fuel pump A “Low Flow/Performance”
P2674	Supply pump specification learning unfinished
U0073	CAN communication error. (Engine)
U0101	CAN communication disrupt. (Transmission)
U0104	CAN communication error. (Scanning cruise)
U010E	CAN communication disrupt. (DCU)
U0121	CAN communication disrupt. (ABS)
U0132	CAN communication error. (Air suspension)
U0155	CAN communication disrupt. (Meter)
U029D	CAN communication disrupt. (SCR upstream NOx sensor)
U029E	CAN communication disrupt. (SCR downstream NOx sensor)
U1001	CAN communication error. (Mechatronics controller , Diag CAN)
U110A	CAN communication disrupt. (Mechatronics controller)
U111E	CAN communication disrupt. (BCU)
U1122	CAN communication disrupt. (EGR controller)

Reference Only

ERROR CODE (ERROR MESSAGE) LIST

Code	Message
U1123	CAN communication disrupt. (VNT controller)
ME034	Crane configuration setting is wrong.
ME035	A moment real load exceeds minimum value.
ME036	The malfunction of the load cell for the boom (1).
ME037	The malfunction of the load cell for the boom (2).
ME038	The malfunction of the load cell for the jib (1).
ME039	The malfunction of the load cell for the jib (2).
ME044	The malfunction of the boom base angle sensor.
ME045	The malfunction of the boom tip angle sensor.
ME046	The malfunction of the mast angle sensor.
ME047	The malfunction of the jib base angle sensor.
ME048	The malfunction of the jib tip angle sensor.
ME049	CEN Option Setting Error
ME050	ML test mode
ME051	Data un-match of civil engineering mode
ME052	Options un-match of civil engineering mode
ME053	Transmission or ML failure.
ME054	DPF Regeneration control not possible.
ME055	Between ECU-ML transmission abnormal.
ME068	Writing error of operator identification ID and/or password.
ME069	Writing error of WORKING AREA LIMIT values.
ME080	None-standard transmission error
ME084	Inclination range X error
ME085	Inclination range Y error
ME086	MC1 redundancy switch is operating.
ME087	MC2 redundancy switch is operating.
ME089	Time out error of synchronizing check during the MC1 start-up process.
ME090	Time out error of synchronizing check during the MC2 start-up process.
ME092	Error No.1 of ML internal setting values abnormality. (Optional item setting)
ME093	Error No.2 of ML internal setting values abnormality. (Crane data)
ME094	Error No.3 of ML internal setting values abnormality. (Manufacturer adjustment data)
ME095	Error No.4 of ML internal setting values abnormality. (Temporary adjustment data)
ME096	Error No.5 of ML internal setting values abnormality. (Crane operation data)
ME097	Error No.6 of ML internal setting values abnormality. (Data for each case)
ME099	Error No.8 of ML internal setting values abnormality. (Failure history data)
ME100	Writing error of optional item setting.
ME101	Writing error of crane data.
ME102	Writing error of manufacturer adjustment data.
ME103	Writing error of temporary adjustment data.
ME104	Writing error of crane operation data.
ME105	Writing error of the data of each case.

Reference Only

ERROR CODE (ERROR MESSAGE) LIST

Code	Message
ME106	Load history data writing error
ME107	Writing error of failure history data.
ME108	Error of the MC crane model number unmatched.
ME109	Error of the MC optional item setting unmatched.
ME110	Communication error between touch panel monitor.
ME111	Time out error of MC1 & MC2 adjustment response.
ME112	CAN communication error with MC1.
ME113	CAN communication error with MC2.
ME114	CAN communication sending error with MC1 & MC2.
ME115	Error No.9 of ML internal setting values abnormality. (Failure history data of MC1)
ME116	Error No.10 of ML internal setting values abnormality. (Failure history data of MC2)
ME117	Writing error of failure history data for MC1.
ME118	Writing error of failure history data for MC2.
ME119	Error No.11 of ML internal setting values abnormality. (Operator identification ID and/or password)
ME120	Error No.12 of ML internal setting values abnormality. (Working area limit values)
ME121	Access error to NOR flash memory in ML. Setting values can not be written.
ME122	MC1 & MC2 reset is detected.
ME123	Writing error of system information for MC1 or MC2.
ME124	Writing error of optional item setting for MC1 or MC2.
ME125	Writing error of adjustment data for MC1 or MC2.
ME126	Writing error of crane operation data for MC1 or MC2.
ME127	Writing error of No.2. manufacturer adjustment data.
ME128	Error No.13 of ML internal setting values abnormality. (No.2 manufacturer adjustment data)
MC1-A01	Not use
MC1-A02	Not use
MC1-A03	Fr. drum motor speed adjusting trimmer
MC1-A04	Re. drum motor speed adjusting trimmer
MC1-A05	Jib (third) motor speed adjusting trimmer
MC1-A06	Boom motor speed adjusting trimmer
MC1-A07	Not use
MC1-A08	Hand throttle potentiometer
MC1-A09	Foot throttle potentiometer
MC1-A10	Hydraulic oil temperature sensor
MC1-A11	Tagline trimmer
MC1-A12	Control primary pressure sensor
MC1-A13	Swing pump pressure sensor
MC1-A14	Swing operation pressure sensor (R)
MC1-A15	Swing operation pressure sensor (L)
MC1-A16	Qmax cut pressure sensor
MC1-A17	Power shift pressure sensor
MC1-A18	Boom power shift pressure sensor

Reference Only

ERROR CODE (ERROR MESSAGE) LIST

Code	Message
MC1-A19	Inclination sensor (X)
MC1-A20	Inclination sensor (Y)
MC1-A21	Fr. drum clutch pressure sensor
MC1-A22	3rd. drum clutch pressure sensor
MC1-A23	Re. drum clutch pressure sensor
MC1-D01	Main pump power control proportional valve
MC1-D02	Boom pump power control proportional valve
MC1-D03	Swing speed control
MC1-D04	Swing reaction proportional valve
MC1-D05	Boom pump control proportional valve
MC1-D06	Fr. electromagnetic detent
MC1-D07	Re. electromagnetic detent
MC1-D08	Main pump control proportional valve 1
MC1-D09	Main pump control proportional valve 2
MC1-D10	Tagline proportional valve
MC1-D11	Left swing proportional valve
MC1-D12	Right swing proportional valve
MC1-C01	Fr. drum clutch CLM
MC1-C02	Fr. drum clutch ESM
MC1-C03	Re. drum clutch CLA
MC1-C04	Re. drum clutch ESA
MC1-C05	3rd. drum clutch CLT
MC1-C06	3rd. drum clutch EST
MC1-C07	Sub battery relay energizing
MC1-C08	Swing parking brake
MC1-C09	Adjustment mode
MC1-C10	Hyd. oil heat
MC1-C11	Qmax cut
MC1-C12	Swing flasher
MC1-C13	Battery relay energizing
MC1-C14	Not use
MC1-C15	Battery relay energizing
MC1-C16	Load safety device bypass switch reset
MC1-C17	Solenoid valve cut relay
MC1-C18	E/G warning
MC1-C19	AIS Air conditioner ON
MC1-C20	Swing brake mode select
MC1-C21	Boom drum turn detecting grip
MC1-C22	Key return
MC1-C23	Tower latch cylinder relay
MC1-C24	Camera power

Reference Only

ERROR CODE (ERROR MESSAGE) LIST

Code	Message
MC1-C25	GITC reset relay
MC1-C26	Manual regeneration
MC1-C27	E/G restart
MC1-C28	Control primary pressure cut
MC1-C29	Fr. drum turn detecting grip
MC1-C30	Re. drum turn detection grip
MC1-C31	Safety relay
MC1-C32	E/G stop relay
MC1-C33	Swing voice alarm (not used)
MC1-C34	Re. / 3rd. drum change
MC1-C35	Not use
MC1-C36	3rd. drum turn detection grip
MC1-H01	Not use
MC1-H02	Overload auto stop is being released
MC1-H03	Flash memory data failure
MC1-H04	MC adjustment is irrelevant
MC1-H05	Receiving error from ML
MC1-H06	Receiving error from MC2
MC1-H07	Not use
MC1-H08	System information abnormal (E10-4)
MC1-H09	Optional item setting abnormal 1 (E10-1)
MC1-H10	Optional item setting abnormal 2 (E10-2)
MC1-H11	Optional item setting abnormal 3 (E10-3)
MC1-H12	Adjustment data abnormal (E10-5)
MC1-H13	Crane operation data abnormal (E10-6)
MC1-H14	Error of the distinguishing signal between MC1 and MC2. (E10-7)
MC1-H15	Error of previous MC1 or MC2 start-up mode discrepancy. (E10-8)
MC2-A01	Not use
MC2-A02	Not use
MC2-A03	Fr. motor tilt pressure sensor
MC2-A04	Re. motor tilt pressure sensor
MC2-A05	3rd. motor tilt pressure sensor
MC2-A06	Not use
MC2-A07	Fuel level sensor
MC2-A08	Fr. independence/confluence pressure sensor
MC2-A09	Re. independence/confluence pressure sensor
MC2-A10	Not use
MC2-A11	Constant horse power cracking pressure sensor
MC2-A12	Not use
MC2-A13	Not use
MC2-A14	Not use

Reference Only

ERROR CODE (ERROR MESSAGE) LIST

Code	Message
MC2-A15	Not use
MC2-A16	Boom raise pressure sensor
MC2-A17	Boom lower pressure sensor
MC2-A18	Fr. drum hoisting pressure sensor
MC2-A19	Fr. drum lowering pressure sensor
MC2-A20	Re. drum hoisting pressure sensor
MC2-A21	Re. drum lowering pressure sensor
MC2-A22	3rd. drum hoisting pressure sensor
MC2-A23	3rd. drum lowering pressure sensor
MC2-D01	Boom raising speed control P. SOL
MC2-D02	Boom lowering speed control P. SOL
MC2-D03	Fr. drum hoisting speed control P. SOL
MC2-D04	Fr. drum lowering speed control P. SOL
MC2-D05	Re. drum hoisting speed control P. SOL
MC2-D06	Re. drum lowering speed control P. SOL
MC2-D07	3rd. drum hoisting speed control P. SOL
MC2-D08	3rd. drum lowering speed control P. SOL
MC2-D09	Constant horse power (Motor CHP pressure P. SOL)
MC2-D10	Fr. drum motor tilt control pressure P. SOL
MC2-D11	Re. drum motor tilt control pressure P. SOL
MC2-D12	3rd drum motor tilt control pressure P. SOL
MC2-C01	Not use
MC2-C02	Not use
MC2-C03	Not use
MC2-C04	Not use
MC2-C05	Not use
MC2-C06	Not use
MC2-C07	Not use
MC2-C08	Not use
MC2-C09	Not use
MC2-C10	Not use
MC2-C11	Not use
MC2-C12	Not use
MC2-C13	Not use
MC2-C14	Not use
MC2-C15	Fr. drum motor boost SOL
MC2-C16	Oil cooler motor
MC2-C17	Fr. independence/confluence
MC2-C18	Re. independence/confluence
MC2-C19	DPF load SOL valve
MC2-C20	Not use

Reference Only

ERROR CODE (ERROR MESSAGE) LIST

Code	Message
MC2-C21	Re. drum motor boost
MC2-C22	3rd. drum motor boost
MC2-C23	Not use
MC2-C24	Not use
MC2-C25	Not use
MC2-C26	Fr. drum operation signal
MC2-C27	Re. drum operation signal
MC2-C28	3rd. drum operation signal
MC2-C29	Fr. drum C/V
MC2-C30	Re. drum C/V
MC2-C31	Not use
MC2-C32	Not use
MC2-C33	Not use
MC2-C34	Not use
MC2-C35	Not use
MC2-C36	3rd. drum C/V
MC2-H01	Not use
MC2-H02	Overload auto stop is being released
MC2-H03	Flash memory data failure
MC2-H04	MC1 adjustment is irrelevant
MC2-H05	Receiving error from ML
MC2-H06	Receiving error from MC1
MC2-H07	Not use
MC2-H08	System information abnormal (E10-4)
MC2-H09	Optional item setting abnormal 1 (E10-1)
MC2-H10	Optional item setting abnormal 2 (E10-2)
MC2-H11	Optional item setting abnormal 3 (E10-3)
MC2-H12	Adjustment data abnormal (E10-5)
MC2-H13	Crane operation data abnormal (E10-6)
MC2-H14	Error of the distinguishing signal between MC1 and MC2. (E10-7)
MC2-H15	Error of previous MC1 or MC2 start-up mode discrepancy. (E10-8)

Reference Only

3.13 WARNING CODE LIST AND CONDITION, ACTION

Various messages are indicated based on crane condition.
These are not errors.

WARNING

The display indicates the code as listed below. Follows the instruction is shown.

Note

Following code list shown all of codes and some of codes would not be indicated depending on the model.

WARNING CODE LIST

Code	Message	Condition, Action
ME001	Out of working angle.	Out of capacity set range.
ME002	Hook overhoist release switch is operating.	The hook overhoist automatic stop release switch is actuated.
ME003	Boom/Jib overhoist release switch is operating.	The boom overhoist automatic stop release switch is actuated.
ME004	Overload release switch is operating.	Overload status is canceled.
ME005	Over load condition.	The loading ratio exceeds the specified level. Lower the load to the ground or raise the boom, jib.
ME006	Head wind is strong.	The guy line support force becomes lower than the specified level.
ME007	Boom is lowered too much.	The boom is out of the maximum working radius area. Raise the boom.
ME008	Boom is raised too much.	The boom is out of the minimum working radius area. Lower the boom.
ME011	Boom is lowered too much.	The boom is out of maximum working radius area. Raise the boom.
ME012	Boom is raised too much.	The boom is out of minimum working radius area. Lower the boom.
ME013	Jib is lowered too much.	The jib is out of maximum working radius area. Raise the jib
ME014	Jib is raised too much.	The jib is out of minimum working radius area. Lower the jib
ME015	Mast is raised too much.	The mast is out of minimum working radius area. Lower the mast
ME016	Mast is lowered too much.	The mast is out of maximum working radius area. Raise the mast.

Reference Only

WARNING CODE LIST

Code	Message	Condition, Action
ME017	Hook overhoist.	The hook exceed the overhoist limit position. Lower the hook.
ME018	Hook overhoist.	The hook exceed the overhoist limit position. Lower the hook.
ME019	Mast cylinder limit switch has not been turned on.	The support is not out of stowed position for mast. Extend the mast support.
ME020	Detecting limit switch for high gantry position has not been turned on.	The gantry is not raised for mast raising. Raise the gantry.
ME021	Boom overhoist.	The boom overhoist limit switch is actuated. Lower the boom.
ME022	Jib overhoist.	The jib overhoist limit switch is actuated. Lower the jib
ME024	Overload precautions.	Loading ratio is 90 % or more.
ME025	Reached the load limitation value of working area limit function.	Lifting load exceeds the lifting load limit value set by operator. Lower the load or raise the jib or boom.
ME026	Reached 90% of the load limitation value of working area limit function.	Lifting load exceeds 90% of the lifting load limit value set by operator.
ME027	Boom angle reached upper limitation value of working area limit function.	The boom reaches the boom angle upper limit point (stop point) set by operator. Lower the boom.
ME028	Boom angle reached lower limitation value of working area limit function.	The boom reaches the boom angle lower limit point (stop point) set by operator. Raise the boom.
ME029	Jib angle reached upper limitation value of working area limit function.	The jib reaches the jib angle upper limit point (stop point) set by operator. Lower the jib.
ME030	Jib angle reached lower limitation value of working area limit function.	The jib reaches the jib angle lower limit point (stop point) set by operator. Raise the jib.
ME031	Working radius reached limitation value of working area limit function.	The boom reaches the working radius limit point (stop point) set by operator. Raise the boom or jib.
ME032	Boom point elevation reached limitation value of working area limit function.	The boom reaches the boom height limit point (stop point) set by operator. Lower the boom.
ME033	Jib point elevation reached limitation value of working area limit function.	Operator set height limit is reached. Lower the jib.
ME034	Crane configuration setting is wrong.	The attachment set data is abnormal. Re-set the attachment.
ME052	Data unmatched of civil engineering mode.	Setting posture is not civil engineering mode. Perform re setting.
ME056	Inspection mode for overload condition.	Load safety device check mode
ME058	Set the swing brake mode.	Apply the swing parking brake and set to the swing brake mode.
ME060	Boom overhoist.	The boom overhoist No.2 limit switch is actuated. Lower the boom.

Reference Only

WARNING CODE LIST

Code	Message	Condition, Action
ME061	Jib winch wire rope is tightened a little more than normal.	The tension of the hoist wire rope exceeds the forecast alarm value, during erecting the tower. Loosen the jib hoist wire rope.
ME062	Jib winch wire rope is abnormally tightened.	The tension of the hoist wire rope exceeds the alarm value, during erecting the tower. Loosen the jib hoist wire rope.
ME063	ML crane configuration does not correspond to the counter weight detecting signal.	The input signal from the counterweight detector does not match the data. Check the counterweight detector or check for proper counterweight selecting in the attachment setting.
ME064	ML crane configuration does not correspond to the carbody-weight detecting signal.	The input signal from the carbody-weight detector does not match the data. Check the counterweight detector or check for proper counterweight selecting in the attachment setting.
ME066	Danger!! The jib tip touches at the ground.	The jib connecting pin is not pulled out at lowering of maximum tower length. Pull out the pin. (Only 7200G)
ME067	Boom winch wire rope is abnormally tightened.	Loose the boom hoist rope before operate the mast.
ME081	Front winch over pay out	The front drum over pay out preventive device is actuated. Operate the front drum toward wind up direction.
ME082	Rear winch over pay out	The rear drum over pay out preventive device is actuated. Operate the rear drum toward wind up direction.
ME083	Third winch over pay out	The third drum over pay out preventive device is actuated. Operate the third drum toward wind up direction.
ME088	Connect the weight	Counterweights detection is not completed. Confirm wiring connection.
MC1-W01	Engine preheat	The message is displayed when the engine coolant temperature is 0 degrees or less with the key switch turned ON.
MC1-W02	Preheat completed	The message is displayed for 5 seconds after the preheat is complete.
MC1-W03	Charging problem	The charging circuit is malfunctioned. Consult with your nearest Manitowoc authorize distributor. * It is not fault even this item is momentarily displayed immediately after the engine is started.
MC1-W04	Pilot pressure (primary) abnormal	The control primary pressure is abnormal. Stop the operation, and consult with your nearest Manitowoc authorize distributor. * It is not fault even this item is momentarily displayed immediately after the engine is started.
MC1-W05	Engine oil pressure	The engine oil pressure is abnormal. Stop the engine at once, and consult with your nearest Manitowoc authorize distributor.
MC1-W06	Engine water level	The cooling water level in the radiator is insufficient. Refill the radiator with cooling water.
MC1-W08	Engine coolant temperature	The coolant temperature is excessively high. Idle the engine to lower temperature, and consult with your nearest Manitowoc authorize distributor.
MC1-W09	Engine oil filter	The engine oil filter is clogged. Replace the filter.

Reference Only

WARNING CODE LIST

Code	Message	Condition, Action
MC1-W10	Engine air filter	The engine air cleaner is clogged. Clean or replace the element.
MC2-W11	Empty fuel	The fuel level is insufficient. Refuel.
MC1-W12	Hydraulic oil temperature	The hydraulic oil temperature is excessively high. Adjust the engine speed to the medium level to lower the oil temperature, and consult with your nearest Manitowoc authorize distributor.
MC1-W13	Front winch cooling circuit oil temperature	The temperature of clutch cooling oil of the front drum is excessively high. Idle the engine at a high speed to lower the oil temperature. If this code frequently appears during normal operations, consult with your nearest Manitowoc authorize distributor. At the same time, inform the Manitowoc service of the details of the operation (lifting load, free fall distance, speed, and duration).
MC1-W14	Rear winch cooling circuit oil temperature	The temperature of clutch cooling oil of the front drum is excessively high. Idle the engine at a high speed to lower the oil temperature. If this code frequently appears during normal operations, consult with your nearest Manitowoc authorize distributor. At the same time, inform the Manitowoc service of the details of the operation (lifting load, free fall distance, speed, and duration).
MC1-W15	Winch filter clogged	The winch cooling line filter is clogged. Replace the filter cartridge. This code may appear during cold weather even when the filter is not clogged. If the code disappear during warm-up, the cartridge does not need to be replaced.
MC1-W16	Front safety ESM solenoid valve is energized	The front drum clutch emergency system is actuated. The free fall of the front drum cannot be normally performed. Place a load and the hook onto the ground, and turn the key switch to the OFF position. Then, consult your nearest Manitowoc authorize distributor. DO NOT operate the key switch with a load or the hook hung in the air, since it may cause drop of the load or the hook.
MC1-W17	Rear safety ESA solenoid valve is energized	The rear drum clutch emergency system is actuated. The free fall of the front drum cannot be normally performed. Place a load and the hook onto the ground, and turn the key switch to the OFF position. Then, consult your nearest Manitowoc authorize distributor. Do not operate the key switch with a load or the hook hung in the air, since it may cause drop of the load or the hook.
MC1-W18	3rd safety EST solenoid valve is energized	The 3rd drum clutch emergency system is actuated. The free fall of the front drum cannot be normally performed. Place a load and the hook onto the ground, and turn the key switch to the OFF position. Then, consult your nearest Manitowoc authorize distributor. Do not operate the key switch with a load or the hook hung in the air, since it may cause drop of the load or the hook.
MC1-W19	Hook overhoist release switch is operating	The hook overhoist automatic stop release switch is actuated.

Reference Only

WARNING CODE LIST

Code	Message	Condition, Action
MC1-W20	Boom overhoist release switch is operating	The boom overhoist automatic stop release switch is actuated.
MC2-W21	ML bypass switch is operating	The moment limiter redundancy switch is actuated. The moment limiter is malfunctioned, and automatic stop operation due to overload and the overhoisted hook block is impossible. Immediately stop the operation, or return extremely carefully, and consult with your nearest Manitowoc authorize distributor.
MC1-W22	DPF option setting abnormal	Option setting dose not match with engine spec. Contact Manitowoc service shop.
MC1-W23	Front drum rotation sensor adjustment	Front drum rotation sensor is not functioning properly. Adjust sensor position. If not corrected even after adjustment, contact Manitowoc service shop.
MC1-W24	Rear drum rotation sensor adjustment	Rear drum rotation sensor is not functioning properly. Adjust sensor position. If not corrected even after adjustment, contact Manitowoc service shop.
MC2-W31	Front drum negative brake abnormal	Front drum negative brake function may be abnormal. Contact Manitowoc service shop.
MC2-W32	Rear drum negative brake abnormal	Rear drum negative brake function may be abnormal. Contact Manitowoc service shop.
MC2-W33	3rd. drum negative brake abnormal	3rd. drum negative brake function may be abnormal. Contact Manitowoc service shop.
MC1-W35	Battery relay abnormal	Battery relay contact may be adhered. Inspect battery relay. Replace if the deposited at the contact point of the relay.
MC1-W36	Propel lever interlocked	Propel (travel) lever is kept ON. Pilot pressure is cut. Return propel (travel) lever back to neutral.
MC2-W37	Front drum lever interlocked	Front drum is stopped since front drum lever is kept ON. Return front drum lever back to neutral.
MC2-W38	Rear drum lever interlocked	Rear drum is stopped since rear drum lever is kept ON. Return rear drum lever back to neutral.
MC2-W39	3rd. drum lever interlocked	3rd. drum is stopped since 3rd. drum lever is kept ON. Return 3rd. drum lever back to neutral.
MC2-W40	Boom drum lever interlocked	Boom drum is stopped since boom drum lever is kept ON. Return boom drum lever back to neutral.
MC1-W41	Remote controller connected	Remote control is connected. Disconnect remote control for crane work.
MC1-W42 MC2-W42	MC1, 2 charge signal abnormal	Charge signal differs on each MC. Contact Manitowoc service shop.
MC1-W44 MC2-W44	MC1, 2 function lock signal abnormal	Function lock signal differs on each MC. Contact Manitowoc service shop.
MC1-W45 MC2-W45	Mc1, 2 inching speed select signal abnormal	Inching speed select signal differs on each MC. Contact Manitowoc service shop.

Reference Only

WARNING CODE LIST

Code	Message	Condition, Action
MC1-W46	Qmax cut sol output off abnormal	Qmax cut solenoid relay contact is adhered at energize side. The engine revolution will be restricted not to raising the maximum revolution. Contact Manitowoc service shop.
MC1-W47	Qmax cut sol output on abnormal	Qmax cut solenoid relay is not functioned. The engine revolution will be restricted not to raising the maximum revolution. Contact Manitowoc service shop.
MC1-W48	Actual rotation is higher than no load rotation	Either front or rear winch motor is running over speed or engine speed is over. Contact Manitowoc service shop.
MC1-W49	High load torque	The engine reached to the maximum torque situation, be sure, there is a possibility of stopping the engine by further engine load due to the abrupt operation is taken. Avoid abrupt lever operation and work with the care. Although the warning will be released by decline the engine load, if frequently happen it, there is a possibility of clogging the fuel filter, recommend replace the filter earlier.
MC1-W50	Joy stick abnormal	Joy stick accel switch exceeds neutral range. Return it to neutral position. If error continues even at neutral position, contact Manitowoc service shop.
MC1-W51	Back up fuse blown out	Back up fuse (F-4) of each controller is blown off. Replace with new one.
MC2-W52	Hook overhoist LS	MC2 detects hook overhoist. Check ML or hook overhoist signal and then contact Manitowoc service shop.
MC2-W53	Boom overhoist LS	MC2 detects boom overhoist. Check ML or boom overhoist signal and then contact Manitowoc service shop.
MC2-W54	Jib overhoist LS	MC2 detects jib overhoist. Check ML or jib overhoist signal and then contact Manitowoc service shop.
MC2-W55	Boom backstop No.1 LS	MC2 detects boom backstop No.1 overhoist. Check ML or boom backstop No.1 overhoist signal and then contact Manitowoc service shop.
MC2-W56	Boom backstop No.2 LS	MC2 detects boom backstop No.2 overhoist. Check ML or boom backstop No.2 overhoist signal and then contact Manitowoc service shop.

Reference Only

3.14 CHECKING PROCEDURE OF LOAD SAFETY DEVICE

Check the following point of the load safety device once a year.

1. Check of work radius indication

(1) Indicate the work radius in the certain point within the work area in lowering motion of boom.
(2) Measure the actual work radius with measuring tape and check if it matches with the work radius indication value.

2. Check of actual load indication

(1) Lift a load weight which is exactly known in advance.
(2) Check if the load (lifting load + hook weight + sling wire weight) matches exactly with the load indication value.

If indication value and actually measured value differ significantly, contact Manitowoc service shop.

Reference Only

4. ASSEMBLY/DISASSEMBLY OF MAIN MACHINERY

4.1 SWING AND TRAVEL STABILITY 4-1
4.2 HANDLING THE REMOTE CONTROL SWITCH BOX 4-4
4.3 ASSEMBLING OF BASE MACHINE 4-8
4.3.1 CAB STEP EXTENSION 4-10
4.3.2 UNLOADING BASE MACHINE FROM TRAILER 4-12
4.3.3 EXTENDING THE CRAWLER 4-13
4.3.4 INSTALLING OF LADDER FOR MACHINERY GUARD 4-20
4.3.5 RAISING GANTRY 4-21
4.3.6 INSTALLING THE BOOM TIP 4-26
4.3.7 INSTALLATION OF THE BASE GUY LINE 4-28
4.3.8 FRONT DRUM WIRE ROPE REEVING 4-30
4.3.9 CARBODY WEIGHT INSTALLATION (USING SELF REMOVAL DEVICE) 4-35
4.3.10 ASSEMBLING THE COUNTERWEIGHTS (USING SELF REMOVAL DEVICE) 4-50
4.3.11 MOUNTING THE ASSEMBLED COUNTERWEIGHT TO BASE MACHINE (USING SELF REMOVAL DEVICE) 4-58
4.4 DISASSEMBLY OF BASE MACHINE 4-67
4.4.1 REMOVE THE COUNTERWEIGHTS FROM THE MACHINE (USING SELF REMOVAL DEVICE) 4-69
4.4.2 DISASSEMBLY OF THE COUNTERWEIGHT 4-78
4.4.3 CARBODY WEIGHT REMOVAL (USING SELF REMOVAL DEVICE) 4-83
4.4.4 WINDING UP THE FRONT DRUM WIRE ROPE 4-97
4.4.5 REMOVING THE BOOM GUY LINE 4-99
4.4.6 DISASSEMBLING THE BOOM TIP 4-101
4.4.7 LOWERING THE GANTRY 4-103
4.4.8 REMOVAL OF LADDER FOR MACHINERY GUARD 4-108
4.4.9 RETRACTING THE CRAWLERS 4-109
4.4.10 BASE MACHINERY LOADING ONTO TRAILER 4-115
4.4.11 STORE AND REMOVAL OF CAB STEP 4-118
4.5 TRANSPORTATION 4-120
4.6 INSTALLATION/REMOVAL OF BOOM BASE 4-121
4.6.1 BOOM BASE INSTALLATION 4-121
4.6.2 BACKSTOP INSTALLATION 4-123
4.6.3 UPPER SPREADER INSTALLATION 4-124
4.6.4 REEVING BOOM HOIST WIRE ROPE 4-125
4.6.5 INSTALLATION OF BOOM HOIST WIRE ROPE TO THE DRUM 4-127
4.6.6 WINDING UP OF BOOM HOIST WIRE ROPE TO THE DRUM 4-128
4.6.7 UPPER SPREADER REMOVAL 4-130
4.6.8 BACKSTOP REMOVAL 4-131
4.6.9 REMOVAL OF BOOM BASE 4-132

Reference Only

4.7 CARBODY WEIGHT INSTALLATION (WHEN USING ASSIST CRANE) 4-134
4.7.1 CARBODY WEIGHT INSTALLATION 4-134
4.7.2 CARBODY WEIGHT REMOVAL 4-138
4.8 SELF REMOVAL CYLINDER (OPTION) INSTALLATION/REMOVAL 4-141
4.9 SELF REMOVAL CYLINDER (OPTION) TAKEOUT/STORAGE 4-145
4.9.1 TAKEOUT OF CYLINDER 4-145
4.9.2 STORAGE OF CYLINDER 4-149
4.10 CRAWLER INSTALLATION/REMOVAL (USING SELF REMOVAL CYLINDER [OPTION]) 4-152
4.10.1 INSTALLATION OF CRAWLER 4-152
4.10.2 REMOVAL OF CRAWLER 4-169
4.11 CARBODY WEIGHT INSTALLATION/REMOVAL (USING SELF REMOVAL CYLINDER [OPTION]) 4-182
4.11.1 CARBODY WEIGHT INSTALLATION 4-182
4.11.2 CARBODY WEIGHT REMOVAL 4-192

Reference Only

4. ASSEMBLY/DISASSEMBLY OF MAIN MACHINERY

In this article, indication of some ladders, steps etc may be neglected to make figure easier to view.

4.1 SWING AND TRAVEL STABILITY

The stability while swinging and traveling of the machine is to be varied depending on the mass of counterweight, condition of the attachment, extension or retraction of the crawler and traveling on the slope.
The operation must be started after confirm the machine stability while swinging and traveling by referring with following table.

1. The table above shows the values for operation on firm ground.
   On a weak ground, operate with care after improving the ground.

2. Swinging on a trailer is prohibited.

3. Maximum slope angle is 21.8 degrees (40%).
   This may become lower depending on condition (ground, crane configuration).

4. Traveling “forward” means that the counterweight is at the lower side of the slope, and “backward” is the counterweight is at the higher side of the slope.

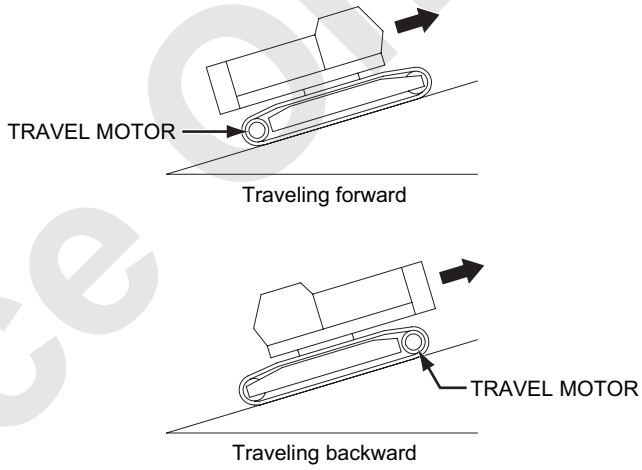

Reference Only

TABLE FOR STABILITY (WITHOUT CARBODY WEIGHT)

Attachment	Counterweight	All-round swing		Travel on slope	
		Crawler extend	Crawler retract	Forward	Backward
Without attachment (Base machine only)	Without : 0 t	○	○	○	○
	No.1 : 8.31 t (18,320 lbs)	○	△ (No abrupt lever control)	△ (Slope 16 degrees or less)	○
	No.1 to No.2 : 19.81 t (43,674 lbs)	△ (No abrupt lever control)	×	×	△ (No abrupt lever control)
	No.1 to No.3 : 31.31 t (69,028 lbs)	×	×	×	×
With boom base (Boom angle : 10 degrees or less)	Without : 0 t	○	○	○	○
	No.1 : 8.31 t (18,320 lbs)	○	○	○	○
	No.1 to No.2 : 19.81 t (43,674 lbs)	○	×	×	○
	No.1 to No.3 : 31.31 t (69,028 lbs)	×	×	×	×
With basic boom (Boom angle : 30 degrees or less)	Without : 0 t	○	○	○	○
	No.1 : 8.31 t (18,320 lbs)	○	○	○	○
	No.1 to No.2 : 19.81 t (43,674 lbs)	○	×	△ (Slope 7 degrees or less)	○
	No.1 to No.3 : 31.31 t (69,028 lbs)	△ (No abrupt lever control)	×	×	△ (No abrupt lever control)

○ : Allowed △ : With restriction × : Not allowed

Reference Only

TABLE FOR STABILITY (WITH CARBODY WEIGHT)

Attachment	Counterweight	All-round swing		Travel on slope	
		Crawler extend	Crawler retract	Forward	Backward
Without attachment (Base machine only)	Without : 0 t	○	○	○	○
	No.1 : 8.31 t (18,320 lbs)	○	○	○	○
	No.1 to No.2 : 19.81 t (43,674 lbs)	○	×	△ (Slope 8 degrees or less)	○
	No.1 to No.3 : 31.31 t (69,028 lbs)	△ (No abrupt lever control)	×	×	△ (No abrupt lever control)
With boom base (Boom angle : 10 degrees or less)	Without : 0 t	○	○	○	○
	No.1 : 8.31 t (18,320 lbs)	○	○	○	○
	No.1 to No.2 : 19.81 t (43,674 lbs)	○	×	△ (Slope 12 degrees or less)	○
	No.1 to No.3 : 31.31 t (69,028 lbs)	△ (No abrupt lever control)	×	×	△ (No abrupt lever control)
With basic boom (Boom angle : 30 degrees or less)	Without : 0 t	○	○	○	○
	No.1 : 8.31 t (18,320 lbs)	○	○	○	○
	No.1 to No.2 : 19.81 t (43,674 lbs)	○	△ (No abrupt lever control)	△ (Slope 18 degrees or less)	○
	No.1 to No.3 : 31.31 t (69,028 lbs)	○	×	△ (Slope 3 degrees or less)	○

○ : Allowed △ : With restriction × : Not allowed

Reference Only

4.2 HANDLING THE REMOTE CONTROL SWITCH BOX

This machine provides the remote control switch box (here after called “remo-con”) for operate the machine from outside at the assembling/disassembling.

Note

When a power switch of remote control switch box (remo-con) is ON position, the engine can’t be started with the engine key in the operator’s cab. When starting the engine from key switch in the operator’s cab, ensure to turn the power switch of remote control box OFF position.

1. Connection with the carbody side

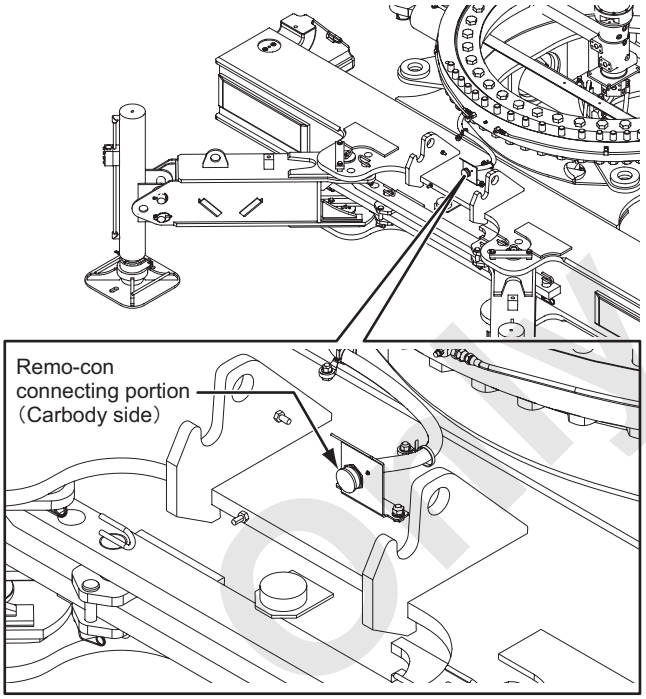

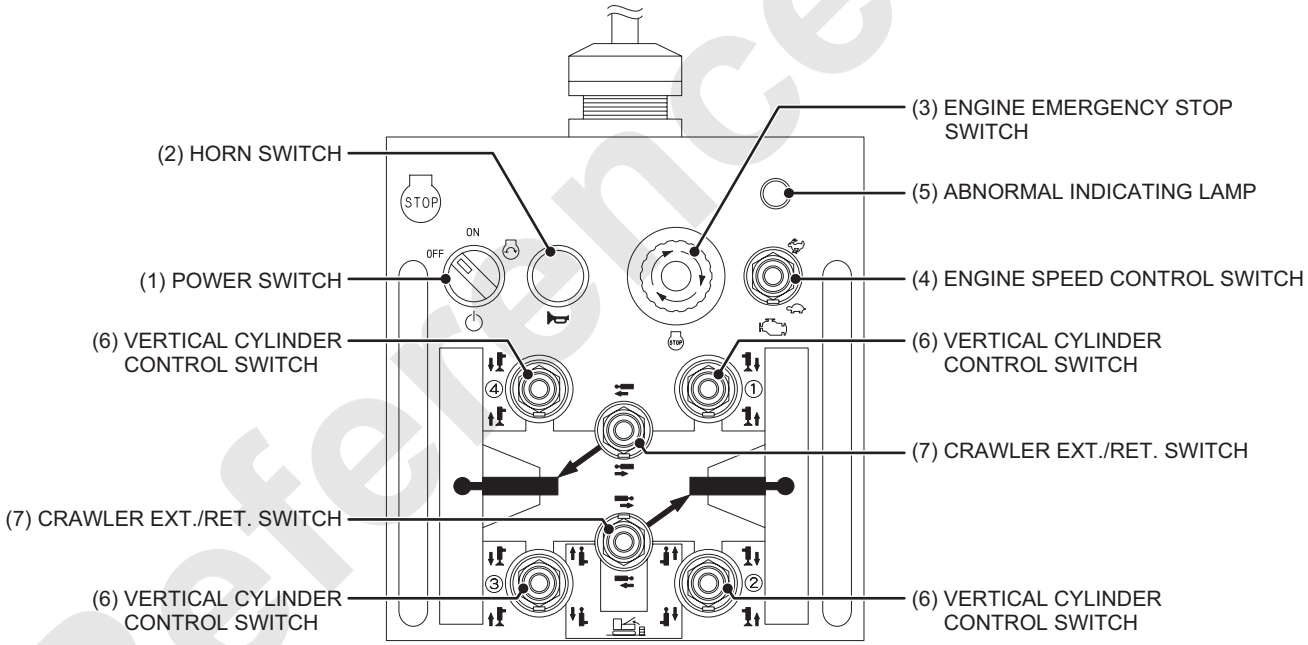

REMOTE CONTROL SWITCH BOX

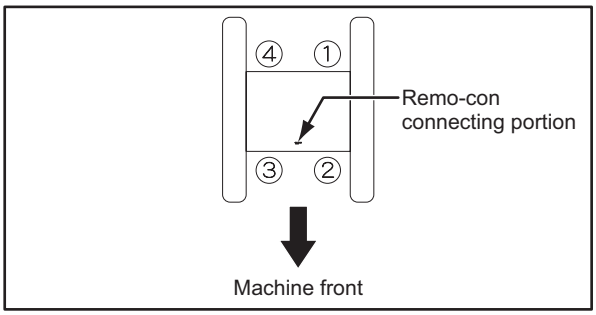

Reference Only

(1) POWER SWITCH

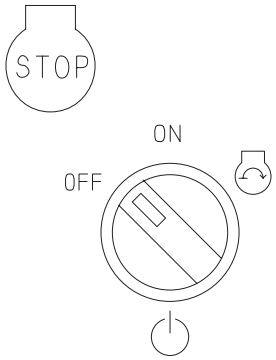

OFF	Power off. / Engine stop. Turning to this position stops the engine.
ON	Power is supplied to crane portion.
	Engine starts. When released, the switch automatically return to ON position.

Note

The engine can't start from the operator's cab if in case this power switch is on position.

(2) HORN SWITCH
Press this switch to sound the horn.

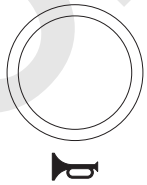

(3) ENGINE EMERGENCY STOP SWITCH
Press this switch to stop the engine in emergency.
The switch stays at depressed position.
To reset, turn the switch to right or pull.

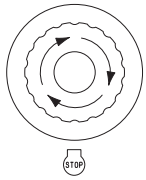

* Use only to stop the engine at emergency case.

(4) ENGINE SPEED CONTROL SWITCH

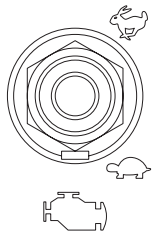

	Increase the engine speed.
	Decrease the engine speed.

(5) ABNORMAL INDICATING LAMP
This lamp turns ON when the engine abnormality occurs.
When this lamp is ON, check the detail of abnormality by the cab monitor and take appropriate action.

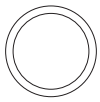

Reference Only

(6) VERTICAL CYLINDER CONTROL SWITCH
This switch is used to control the translifter.

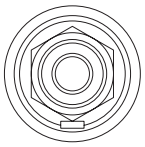

,	Vertical cylinder extends.
,	Vertical cylinder retracts.

(7) CRAWLER EXTEND/RETRACT SWITCH
This switch is used to control the crawler extend/retract cylinder.

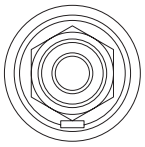

,	Crawler extend/retract cylinder extends.
,	Crawler extend/retract cylinder retracts.

Reference Only

2. Connection with the self removal device side

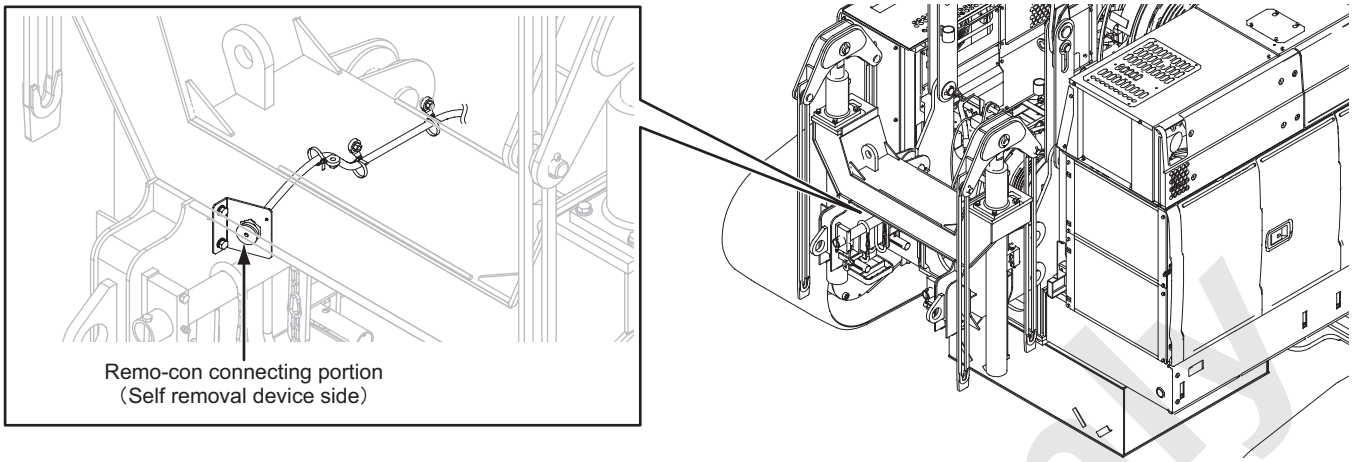

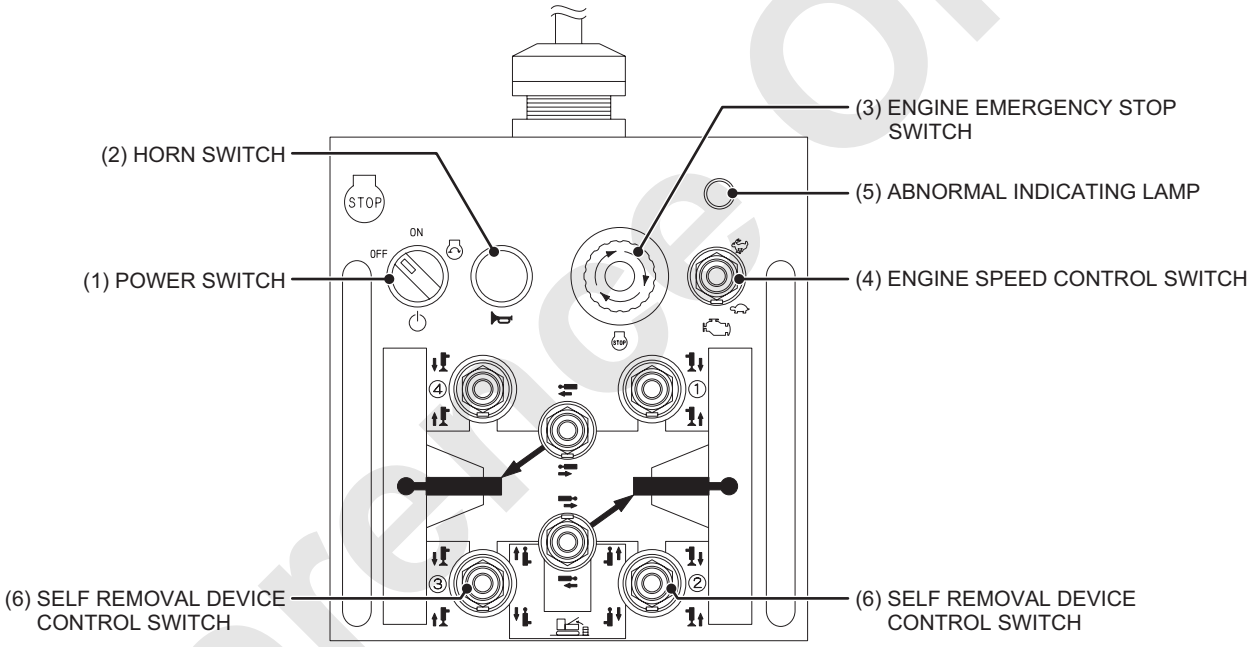

REMOTE CONTROL SWITCH BOX

Switches (1) to (5) are same functions when connect the switch box with carbody.

(6) SELF REMOVAL DEVICE CONTROL SWITCH
This switch is used to control self-removal cylinders.

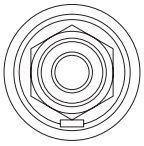

	Self-removal cylinder extends.
	Self-removal cylinder retracts.

Reference Only

4.3 ASSEMBLING OF BASE MACHINE

This article explains assembly of the main machinery for unloading, changing to work configuration.

WARNING

Any work on the base machine would be dangerous if proper procedure is not taken.
Hold a pre-work meeting to go over the procedure to prevent accident and proceed with the work safely.
Failure to observe this precaution may result in a serious injury or loss of life.

WARNING

Do not insert finger or hand into a pin hole when aligning, inserting or removing pin.
Failure to observe this precaution may result in a serious injury or loss of life.

WARNING

- **The ground where base machine is placed during assembly/disassembly may receive large load.**
- **Ensure the ground for operation is firm and level and place the steel plate or improve the ground condition as required.**
  Failure to observe this precaution may result in a serious accident.
- **Use proper rated assist crane, slings, shackles and other equipment.**
  Failure to observe these precautions may result in a serious accident.

Reference Only

1. Check points prior to work

- A qualified supervisor who is competent in the procedures.
- Hold a pre-work meeting for safety.
  Review potential hazards and hazardous locations in the course of work.
- Make every worker aware of work contents, procedure and signal.
- Inspect assist crane and other equipment for their condition.

2. Securing place

- Select a firm and level space enough for the task.
  Place the planking such as steel plates or crane mats on the ground as required.
- Assign areas for the assist crane, parts storage and trailer access.

3. Preparation before assembling/disassembling work

- Secure the setting place of assist crane and prepare the required lifting gears, protective materials and tools.
- Secure required number of workers for the work. (Crane operators, assistant operators, slinging workers and signal persons)
- Take appropriate action to keep unrelated person off the work area other than workers during work.

4. Cautions during assembly/disassembly work

- During work, install the waterproof cap on the cable end of the hook overhoist preventing device. During crane work, remove the waterproof cap and wire the overhoist cable properly.
- Refer to the article “8.2 DIMENSION, WEIGHT OF EACH COMPONENT” for weight, dimension during work.
- The operator has to be informed if any person moved to out of sight from the operator or at hazardous location when equipment or machine part moves.

Reference Only

4.3.1 CAB STEP EXTENSION

Steps provided at the cab door are for the safe access to the operator cab.
Extend the steps during work, and stow or remove for transportation.

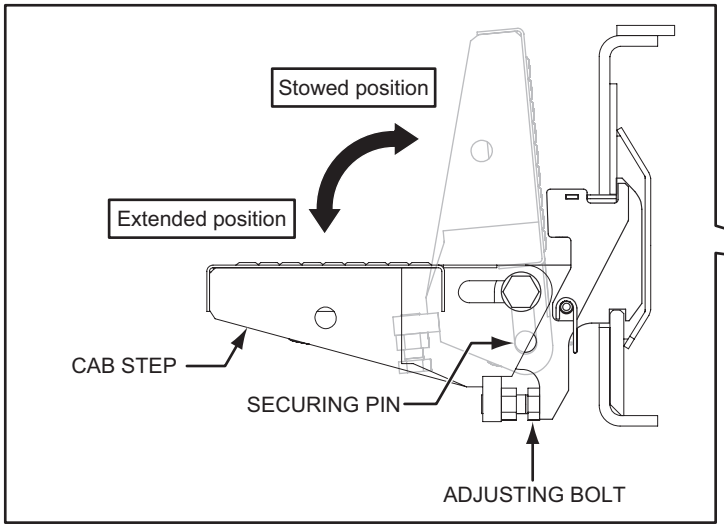

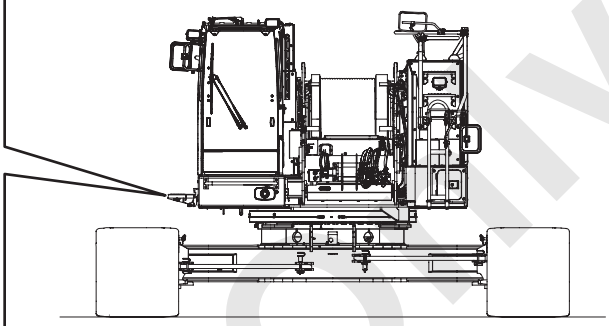

1. Extension of the step from stowed position

(1) Remove the securing pin and lift up the outer end of the step full and then rotate it toward outer side to extend to horizontal position.
(2) If the step is not horizontal after extended, adjust two bolts to make the step in horizontal position.

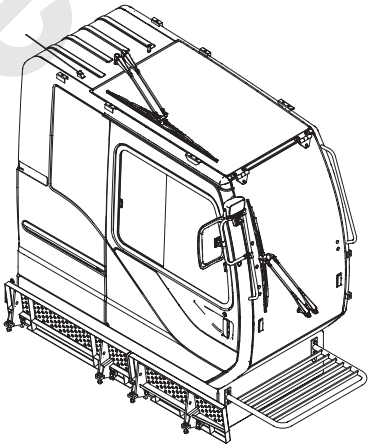

Stowed position

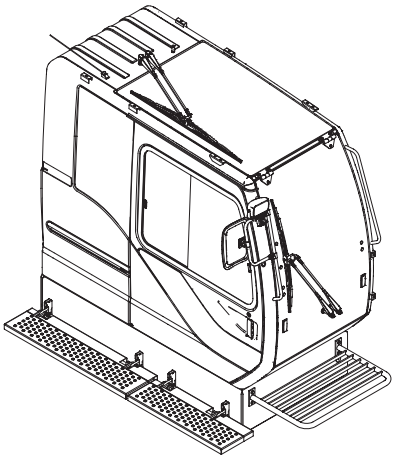

Extended position

Reference Only

2. Installation of the step

(1) Put the step to the place where the step installing and securing on the guard and rotate the step as shown.

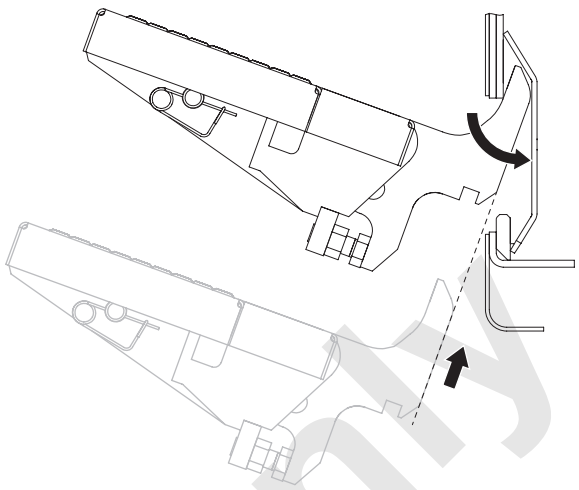

WARNING

When installing the step, ensure not to bite the finger by bracket and the like.

(2) Lower the step and align the groove on the step with the notch on the guard.

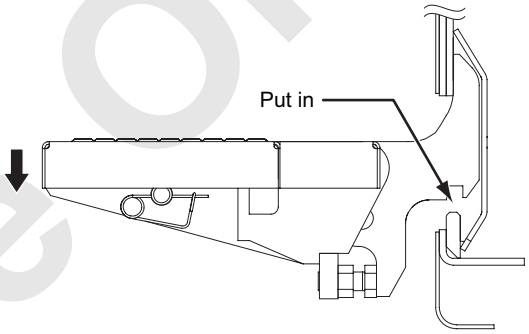

(3) Install the bracket to prevent unhinged the step. (2 pieces for one step)
(4) Insert the securing pin for bracket. Confirm the steps are firmly secured.

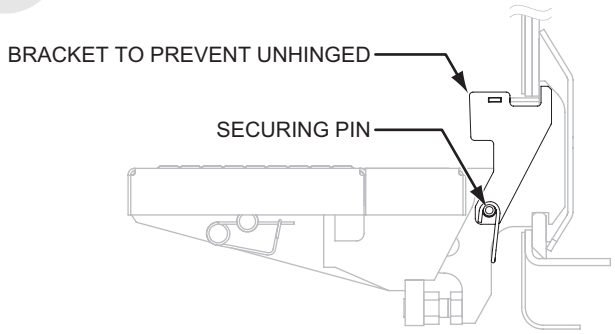

Reference Only

4.3.2 UNLOADING BASE MACHINE FROM TRAILER

1. After checking the ground condition where the base machine is placed, stop the trailer.

2. Start the engine and set the speed to low. (800 min^{-1} [800 rpm])

3. Engage the swing brake and turn the function lock lever to “WORK” position while the swing lock pin is inserted.

4. Travel the machine slowly using the loading plates.

DANGER

Do not raise the boom to higher than 10 degrees angle when loading into trailer.
The machine may overturn backward.
Failure to observe this precaution may result in a serious injury or loss of life.

DANGER

Do not swing the upper machinery on the trailer to avoid the machine overturning.
Failure to observe this precaution may result in a serious accident.

WARNING

The gravity center may shift suddenly at the border between the loading ramp and the trailer.
Set the travel speed select switch to LOW and travel with slow and constant speed.
Failure to observe this precaution may result in a serious injury or loss of life.

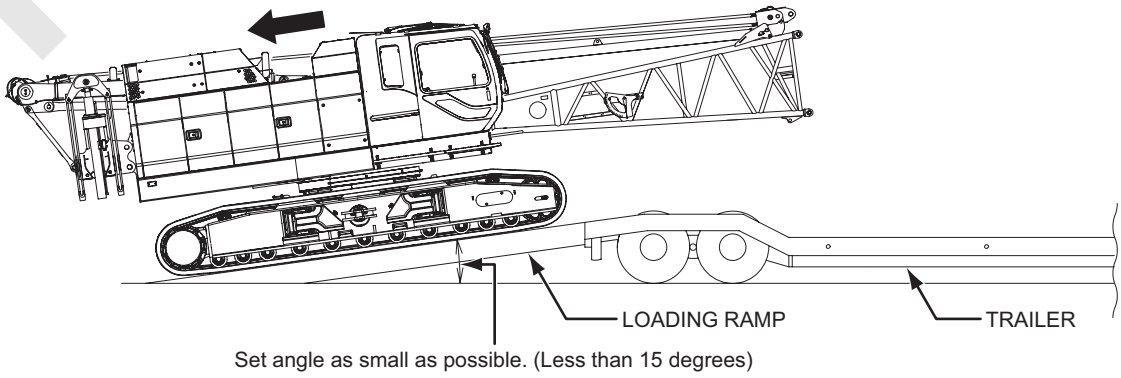

Reference Only

4.3.3 EXTENDING THE CRAWLER

This article explains that the sequence of extension of crawlers starting from the basic machine with crawlers fully retracted.

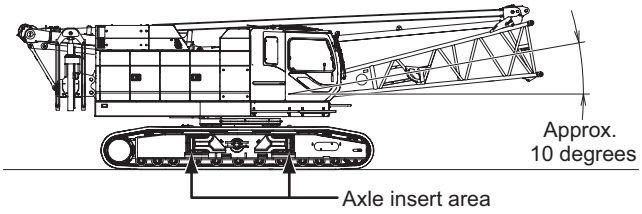

Although the crawler extending/retracting can be done without the boom base, this article explains the procedure with boom base attached.

Perform the crawler extending/retracting work under the following conditions.

- Counterweight : None
- Boom : Boom base only
- Boom angle : Approx. 10 degrees

WARNING

Ensure the ground for operation is firm and level and place the steel plate or improve the ground condition as required.
Failure to observe this precaution may result in a serious accident.

Prior to extending/retracting, clean the axle extension thoroughly and apply grease (Molybdenum disulphide grease) to the slide area.
If mud is left on, extension or retraction work could be difficult.

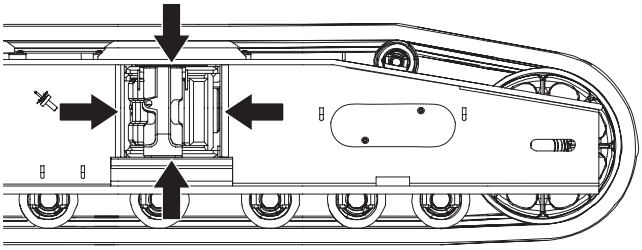

Coat the grease on the sliding surface of axle.

Note

Apply the molybdenum disulphide grease to the axle.

Reference Only

1. Pull out the securing pin (a) connecting the carbody and both right hand and left hand links.

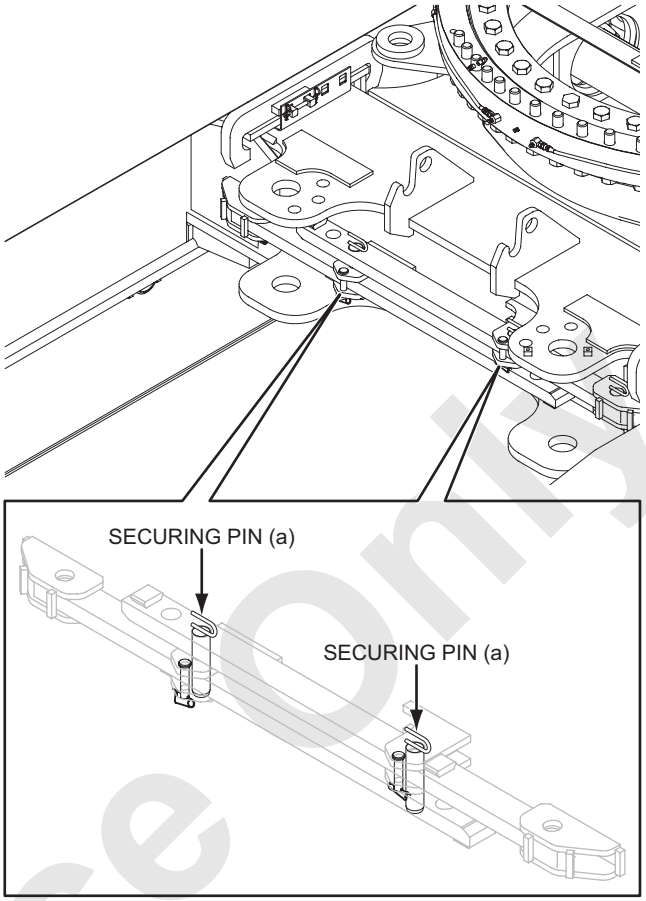

2. Pull out the axle extension securing pin which secure the axle extension and the crawler frame. (4 pieces on right and left)

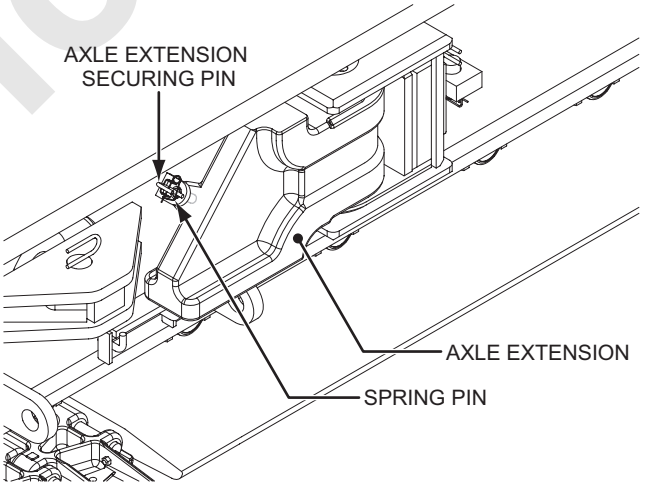

Reference Only

3. Turn all four axle extensions for 90 degrees toward outside to make them parallel to the axles.
   Axle extension securing pin is to be installed on the crawler frame side.
   Pay attention to the installation direction of axle extension securing pin for safety as shown.

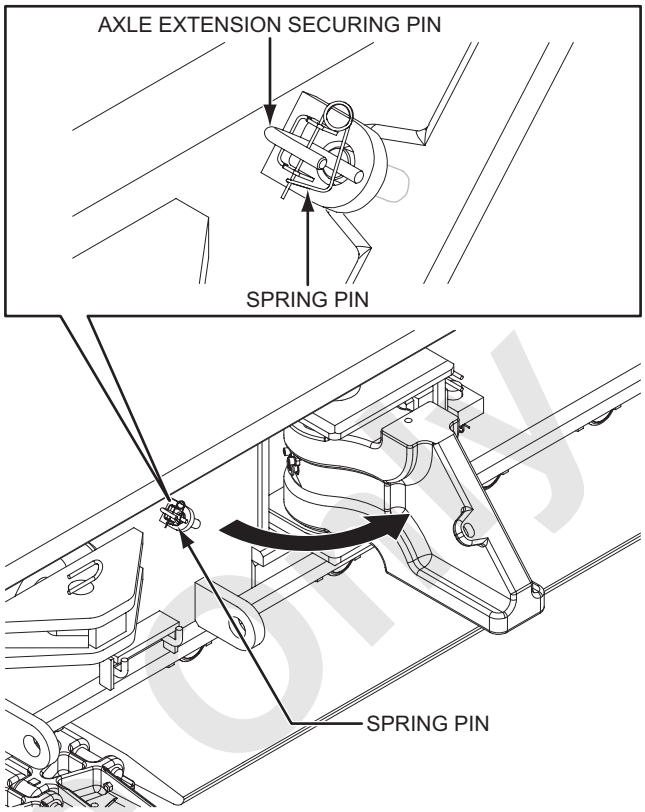

4. Insert the rotation preventive bracket to the pivot area of the axle extension from the direction as shown.
   (The rotation preventive bracket has been stored on the crawler frame.)

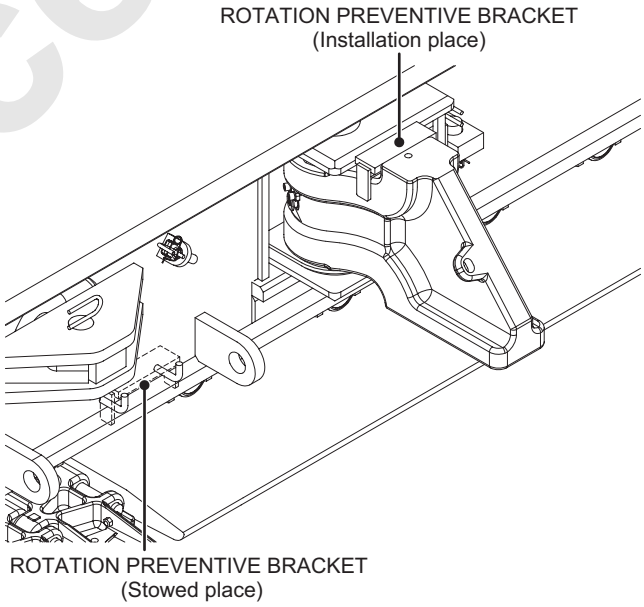

Reference Only

5. Take out the clearance adjusting shims between the crawler and the axle.

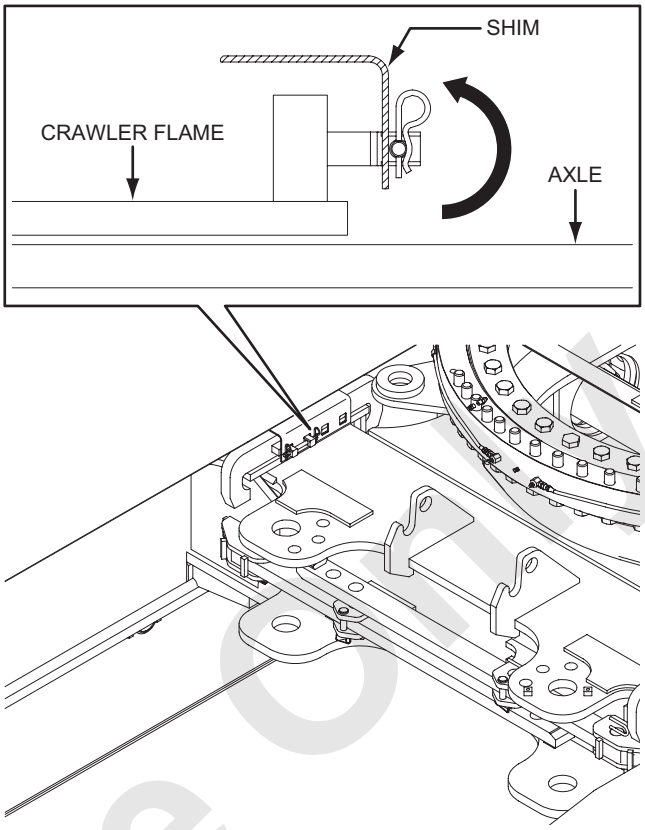

WARNING

Do not insert the finger or hand into the gap between the crawler and axle when installing or removing the shim.
Failure to observe this precaution may result of a serious injury.

6. Face the upper machinery to the front.

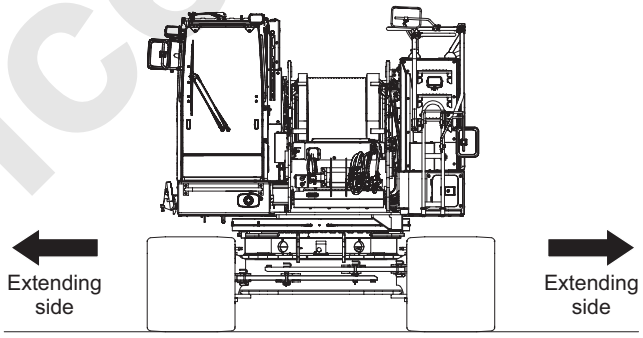

WARNING

To prevent overturn of the base machine ensure to engage the swing brake and lock.
Failure to observe this precaution may result in a serious accident.

7. Check to see that there are no obstacles in the area of crawler extension.
   Turn the crawler extend switch to extending side.
   If the crawler can't be extended smoothly, repeats manipulate the switch both sides for extending and retracting or travel forward and backward.
   (Both right and left crawler will be extend simultaneously)

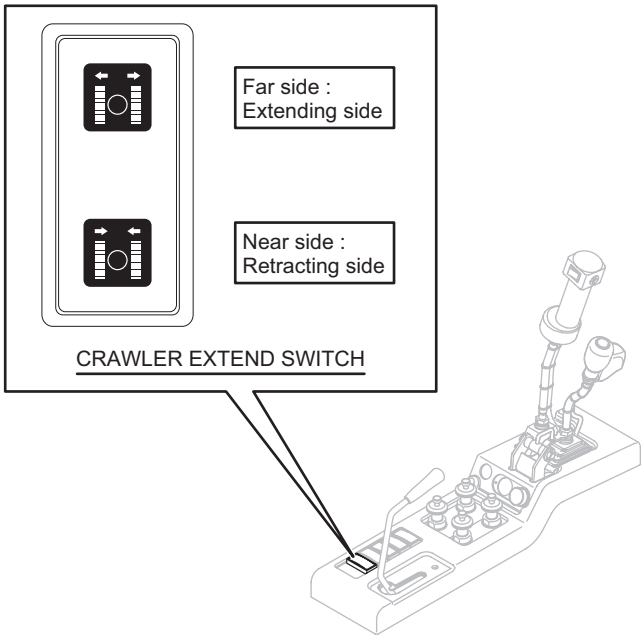

Reference Only

8. If the crawler still can't be extended with the step 7 above performed due to bad ground condition, swing the upper machinery slowly to right angle with the crawler.
   In this case, ensure to make the crawler to be extended comes to the front side (operator cab side).

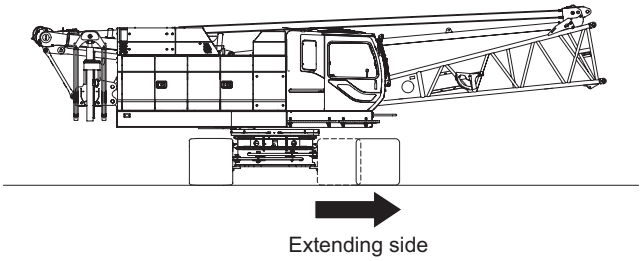

9. Extend the crawler until the block on link to the bracket on the carbody is to be contacted.
   Extended the crawler, align the pin hole (at extending) between the carbody side bracket and crawler connecting link and insert the securing pin (a).

⚠ WARNING

Do not insert finger or hand into a pin hole when aligning, inserting or removing pin.
Failure to observe this precaution may result in a serious injury or loss of life.

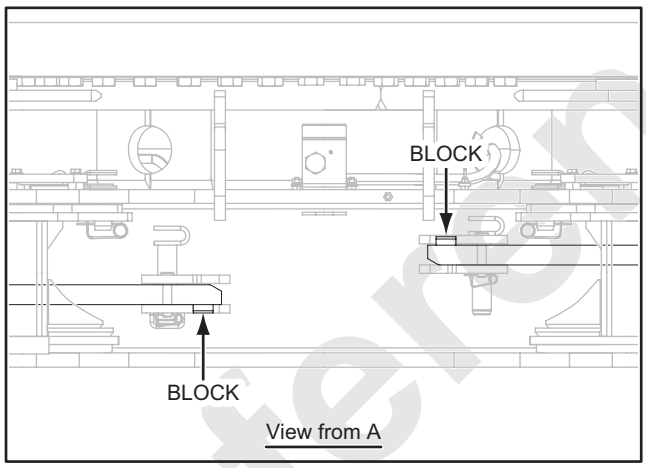

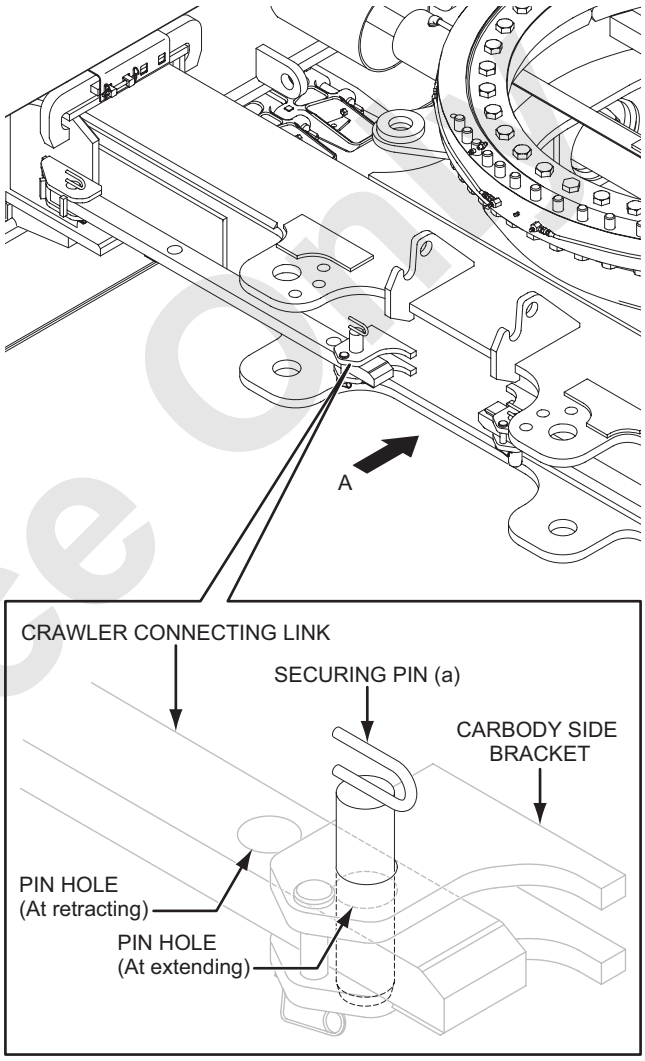

10. In case of extending the crawler by one side, swing the upper machinery 180 degrees and extend the remaining crawler as same order as other side.

Reference Only

11. Confirm both of crawlers are extended fully and all of securing pin (a) are inserted to the pin holes for extending position.

WARNING

Ensure to insert the securing pin (a) at extend position when the crawler extended.
When it is inserted to retract position, the extended width of crawler is not enough resulted the machine may overturn at erection or lifting work.
Failure to observe this precautions may result in a serious injuries or loss of life.

12. Swing the upper machinery to widen a clearance between the crawler frame and the axle and inserting the adjusting shim at four places.
    Each shim has a unique number stamped and install it accordingly.

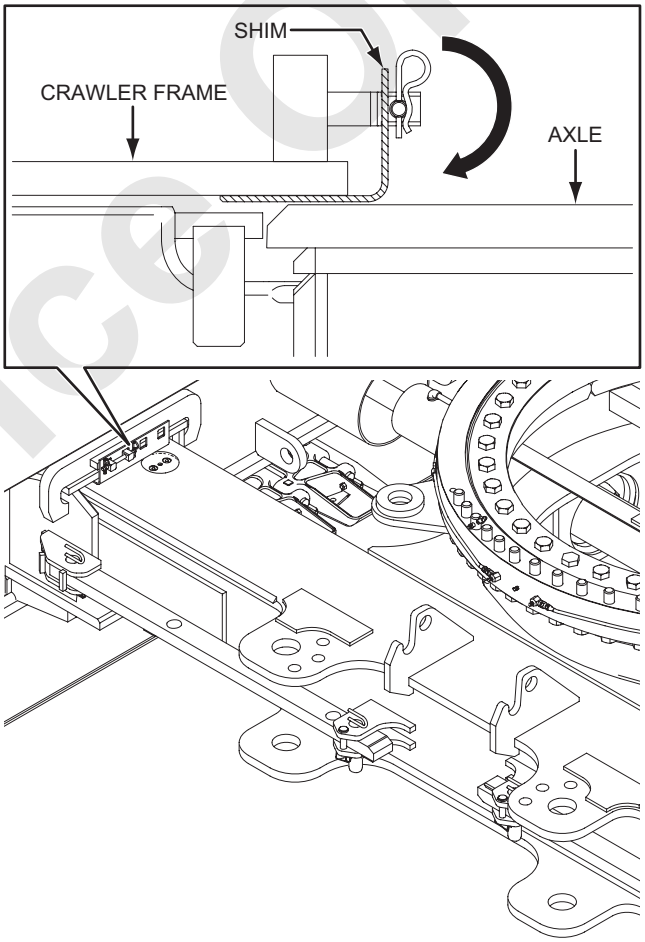

WARNING

Do not insert the finger or hand into the gap between the crawler and axle when installing or removing the shim.
Failure to observe this precaution may result of a serious injury.

CAUTION

Insert the adjusting shim to all axles.
Otherwise the crawler frame would become misaligned and result in premature shoes or roller wear.
Failure to observe this precaution may lead to damage the parts.

Reference Only

13. Remove the securing pin connecting the crawler ext./ret. cylinder with the crawler frame and retract cylinder fully.
    The removed securing pin is to be inserted to the crawler side pin hole and secure with the spring lock pin.

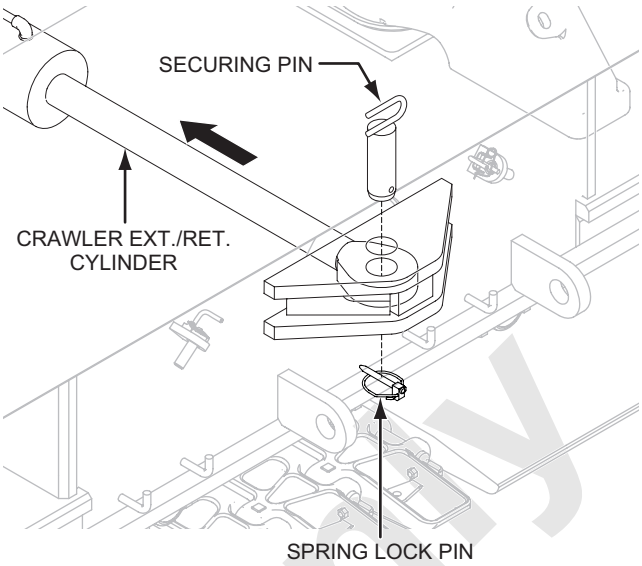

WARNING

Do not insert finger or hand into a pin hole when aligning, inserting or removing pin.
Failure to observe this precaution may result in a serious injury or loss of life.

CAUTION

The crawler Ext./Ret. cylinder should be kept in full retract position unless the crawler is to be extend or retract.
Otherwise may result in premature damage of cylinder due to sticking of dust/dirt on the sliding part of cylinder.
Failure to observe this precaution may lead to damage the parts.

Reference Only

4.3.4 INSTALLING OF LADDER FOR MACHINERY GUARD

1. Insert the ladder on the right hand guide.

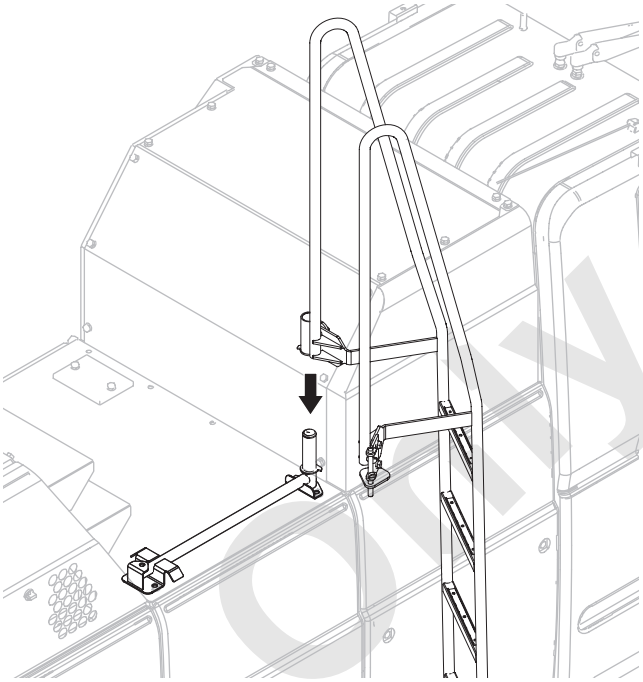

2. Turn the ladder and align the pin hole for the left hand side bracket of ladder and insert the securing pin.

3. Confirm the ladder installed securely.

⚠ WARNING

Do not insert finger or hand into a pin hole when aligning, inserting or removing pin.
Failure to observe this precaution may result in a serious injury or loss of life.

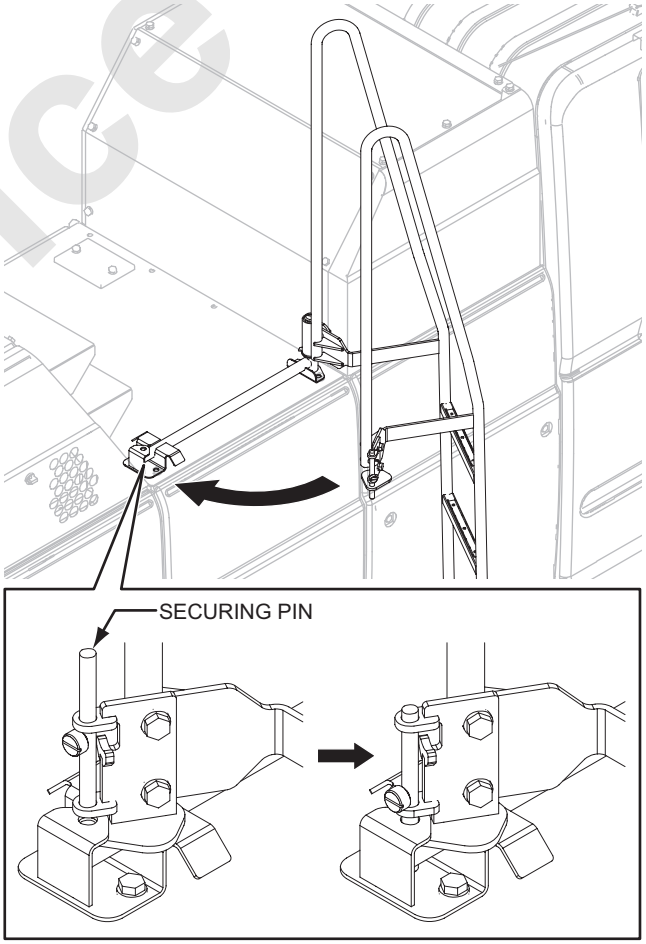

Reference Only

4.3.5 RAISING GANTRY

DANGER

Do not stand on, or enter under/inside of the attachment being assembling/disassembling.
Failure to observe this precautions may result in a serious injury or loss of life.

DANGER

Do not enter under or inside of the gantry (or mast).
Failure to observe this precaution may result in a serious injury or loss of life.

WARNING

- **When handling the wire rope, use leather gloves to prevent injury on the fingers or hands.**
  Failure to observe this precaution may result in a serious injury.
- **Take extra care to work on the moving wire rope not to touch the sheave and wire rope to prevent accident of being crushed or being entangled.**
  Failure to observe this precaution may result in a serious injury or loss of life.

CAUTION

Ensure to perform the gantry raising/lowering work with the boom placed on the wood blocking of approx. 100 mm (3-15/16 in.) in height.
Take extra care on slack or tension of the boom.
Failure to observe this precaution may lead to damage the parts.

Reference Only

1. Place the boom base on the block.

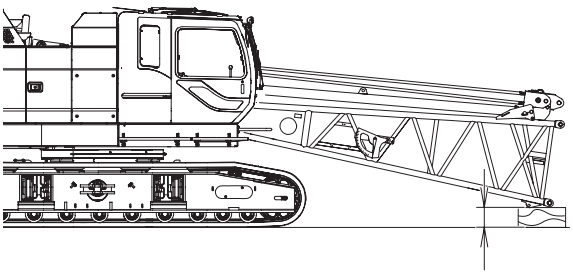

WARNING

Do not lower the boom base tip below ground level, otherwise interfere the boom and/or backstop with surrounding components and lead to damage parts.

2. Pull out the travel kit securing pin, and remove it from swing frame.
   Travel kit securing pin secured with spring lock pin.

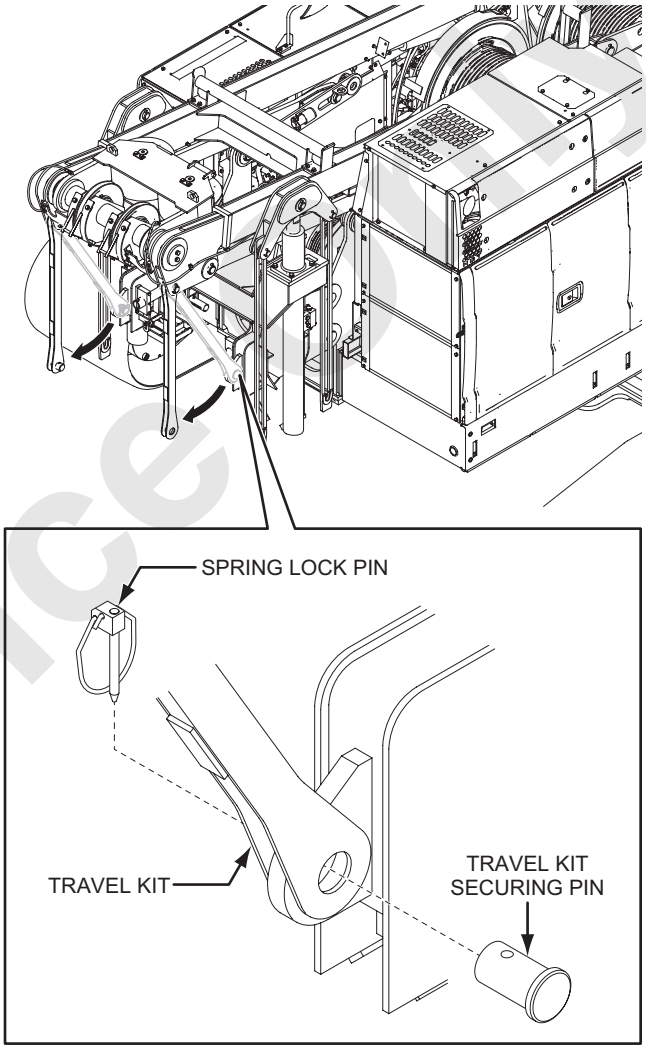

WARNING

Do not insert finger or hand into a pin hole when aligning, inserting or removing pin.
Failure to observe this precaution may result in a serious injury or loss of life.

3. Start the engine and set the speed to approx. 1,000 min^{-1} (1,000 rpm).

WARNING

Sound the signal horn to warn the surrounding personnel before starting the engine.
Failure to observe this precaution may result in a serious injury or loss of life.

Reference Only

4. By turning the gantry control switch to raising side (outward), raise the gantry with the cylinders.

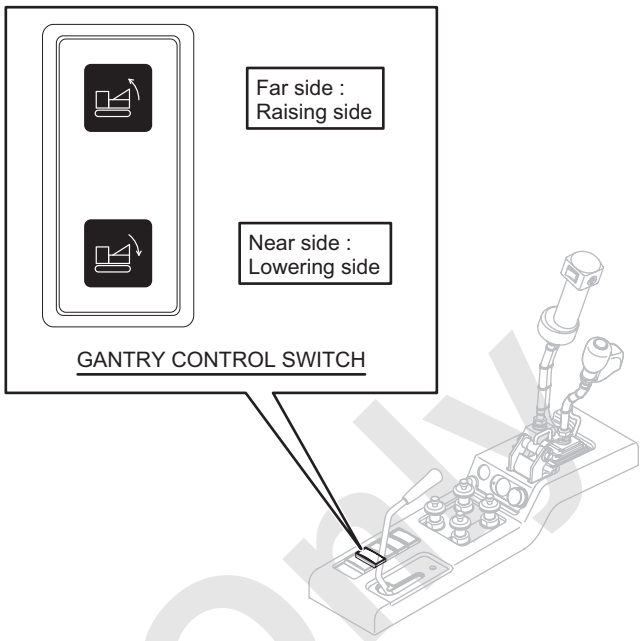

CAUTION

- **When the gantry is raised or lowered, make sure that there is no persons around the gantry area and observe the raising or lowering condition of the gantry.**
  Failure to observe this precaution may result in a serious injury or loss of life.
- **Before operating the gantry control switch, sound the horn to warn the person around.**
  Failure to observe this precaution may result in a serious injury or loss of life.
- **During crane work or raising the boom, do not operate the gantry control switch.**
  Failure to observe this precautions may result in a serious accident.

DANGER

Never raise the gantry using the boom hoist wire rope or using the assist crane.
The gantry may suddenly drop immediately when the gantry securing pin is pulled out during gantry lowering.
Failure to observe this precaution may result in a serious injury or loss of life.

Reference Only

5. When the gantry reaches to the “WORK” position, insert the gantry securing pin into the gantry on both sides and secure the them with the spring pins.

6. Secure the travel kit to the stopper on gantry with travel kit securing pin.

⚠ WARNING

Do not insert finger or hand into a pin hole when aligning, inserting or removing pin.
Failure to observe this precaution may result in a serious injury or loss of life.

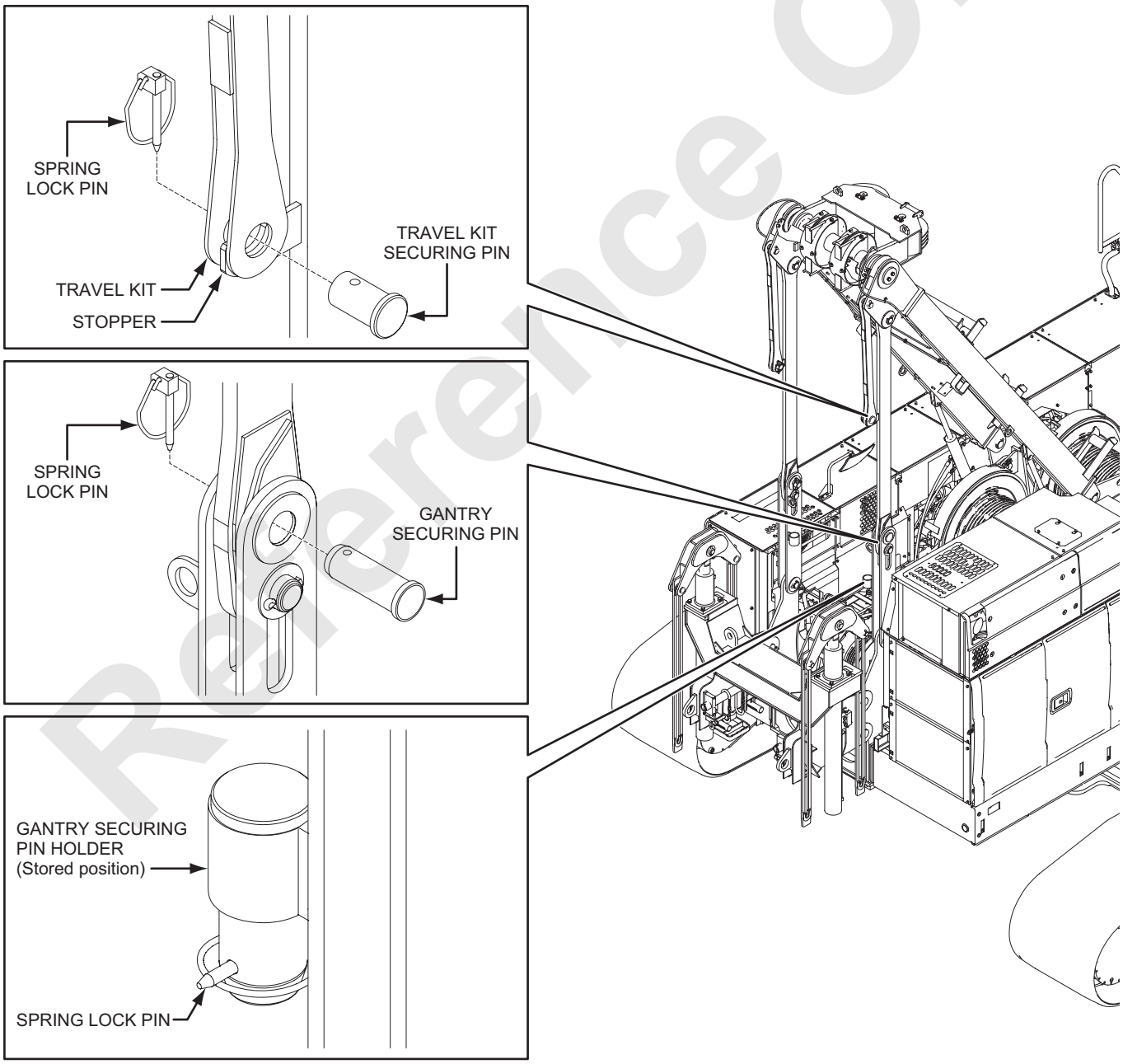

Reference Only

7. Confirm the upper spreader is secured to the bracket on the boom base tip with securing pins, wind up the boom wire rope slowly until the slack is taken up.
   In this case, wind up the wire rope to the drum neatly by applying tension on the rope to avoid rough spooling.

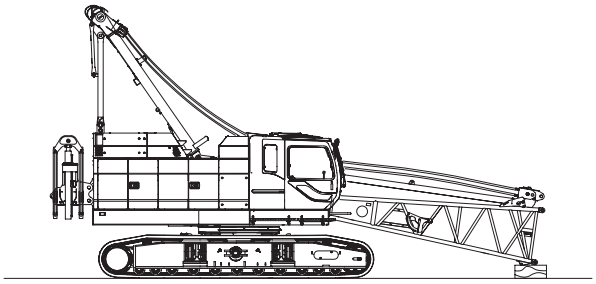

⚠ WARNING

Place a signalman to prevent accident from rotating drum.
Failure to observe this precaution may result in a serious injury.

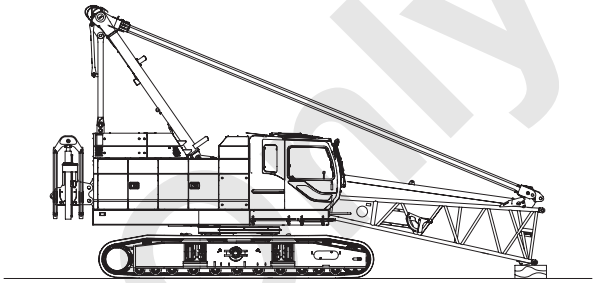

⚠ CAUTION

In case of the machine works certain period, retract the gantry cylinder and secure it while working.
For fixing, use the chain, of which is the attached tool of the machine.

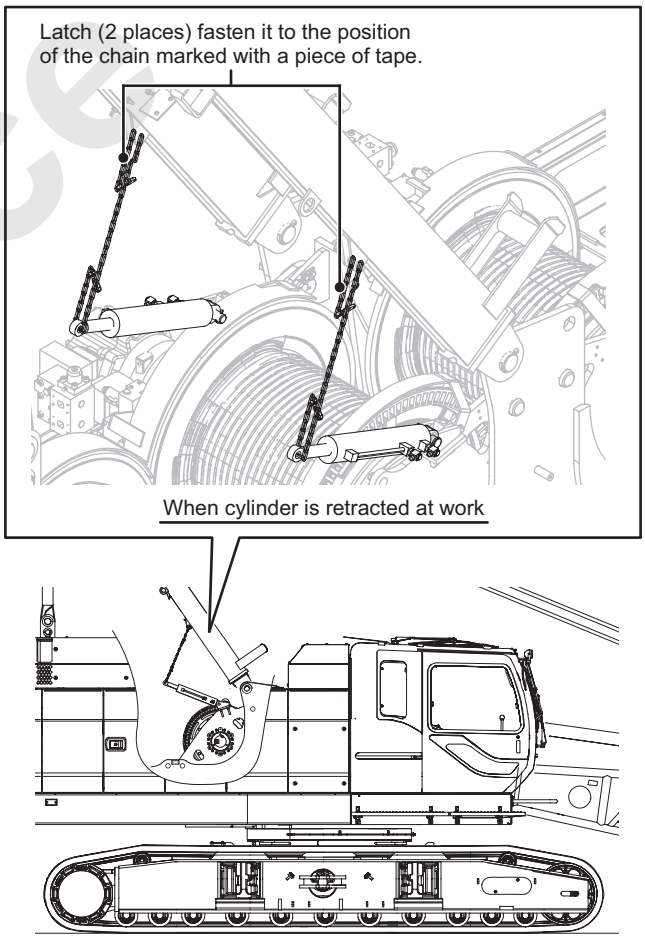

Reference Only

4.3.6 INSTALLING THE BOOM TIP

1. Align the top connecting parts of boom base and boom tip and insert the connecting pins (with flange) by tapping it.
   The pin shall be inserted with the connecting pin hole is to be vertical direction and insert the spring lock pins.

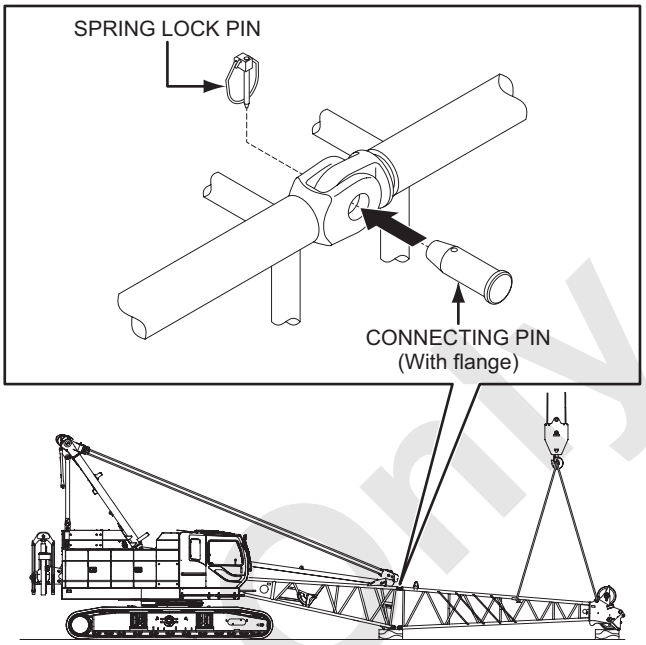

WARNING

Do not insert finger or hand into a pin hole when aligning, inserting or removing pin.
Failure to observe this precaution may result in a serious injury or loss of life.

Note

Be sure to tap the connecting pins (with flange) from the outside to the inside.

Reference Only

2. Raise the boom base until the lower pin holes are aligned and insert the connecting pins (double tapered) by tapping it.
   The pin shall be inserted with the connecting pin hole is to be vertical direction and insert the spring lock pins.

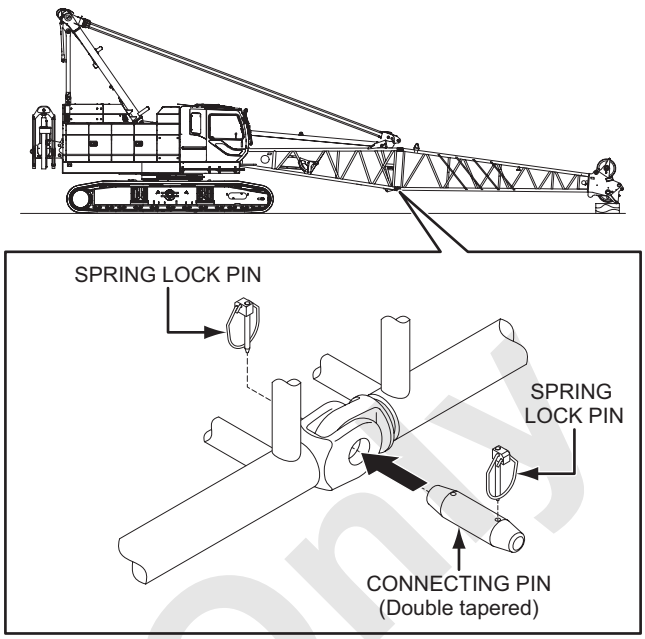

DANGER

Do not stand on, or enter under/inside of the attachment being assembling/disassembling.
Failure to observe this precautions may result in a serious injury or loss of life.

WARNING

Do not stand in line with the connecting pins (double tapered) being inserted/removed.
The pin may fly out from the pinhole.
Failure to observe this precaution may result in a serious injury or loss of life.

WARNING

Do not insert finger or hand into a pin hole when aligning, inserting or removing pin.
Failure to observe this precaution may result in a serious injury or loss of life.

Reference Only

4.3.7 INSTALLATION OF THE BASE GUY LINE

1. Install the base guy lines between the boom tip and upper spreader.
   Open the split pin of the guy line connecting pins to approx. 60 degrees.

2. Remove the spreader securing pins.
   Adjust tension of the boom hoist wire rope during the process.

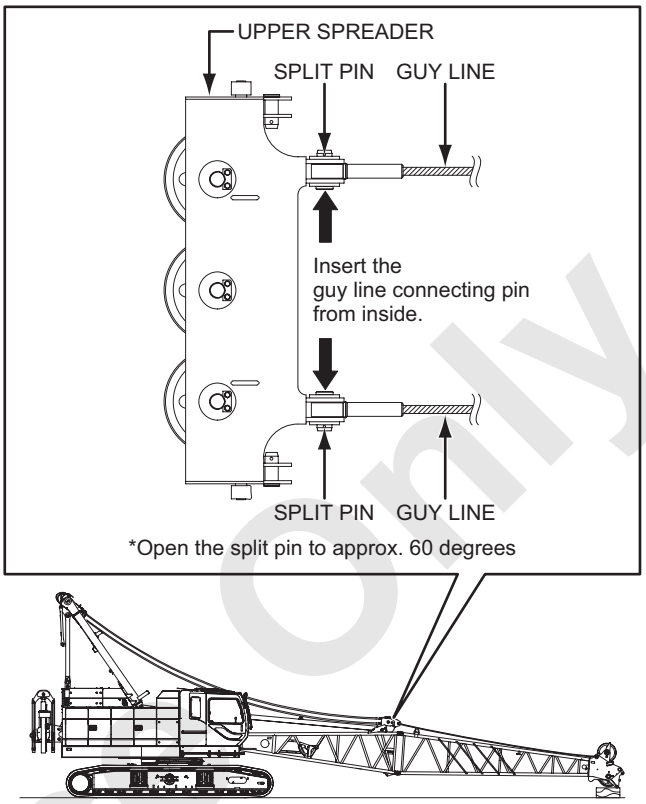

WARNING

- **When working at a high elevation, be sure to use a safety belt to prevent falling.**
  Failure to observe this precaution may result in a serious injury or loss of life.
- **Use a scaffolding board for working on the attachment.**
  Failure to observe this precaution may result in a serious injury or loss of life.

WARNING

Do not insert finger or hand into a pin hole when aligning, inserting or removing pin.
Failure to observe this precaution may result in a serious injury or loss of life.

Reference Only

3. Turn the boom drum control lever to the raise side and wind the boom hoist wire rope slowly.
   During this operation, apply tension on the lower layer rope to prevent rope upsetting and tap the rope lightly with a hammer to make rope wind evenly.
   Stop winding the boom hoist wire rope just before the boom tip leaves the ground.

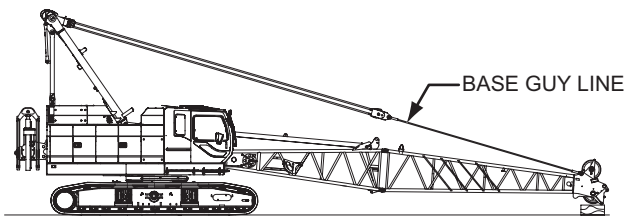

WARNING

- **When working at a high elevation, be sure to use a safety belt to prevent falling.**
  Failure to observe this precaution may result in a serious injury or loss of life.
- **Use a scaffolding board for working on the attachment.**
  Failure to observe this precaution may result in a serious injury or loss of life.

Reference Only

4.3.8 FRONT DRUM WIRE ROPE REEVING

WARNING

- **When handling the wire rope, use leather gloves to prevent injury on the fingers or hands.**
  Failure to observe this precaution may result in a serious injury.
- **Take extra care to work on the moving wire rope not to touch the sheave and wire rope to prevent accident of being crushed or being entangled.**
  Failure to observe this precaution may result in a serious injury or loss of life.
- **Place a signal person to prevent accident from rotating drum.**
  Failure to observe this precaution may result in a serious injury.

CAUTION

The hook is to be installed correct direction.
When passing the hoist wire rope to the hook, face the striker (hook side weight catch) contacting the hook overhoist limit switch weight to the boom foot side.

Reference Only

1. Place the hook, overhoist limit switch, weight and socket, near the boom tip.

2. Turn the front drum control lever to lower side to pay out the wire rope to the boom tip.

3. Pass the wire rope through the idler sheave and boom point sheave by referring to the right figure.

* However, in case of the number of reeving is 7 parts of line or more, pass the wire rope through the middle idler sheave and pass it to the auxiliary sheave.
(Refer to the article "HOIST ROPE REEVING IN BOOM POINT AREA".)

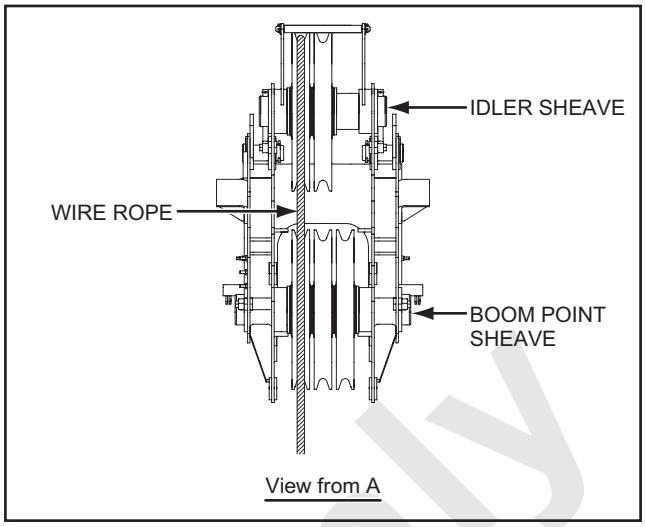

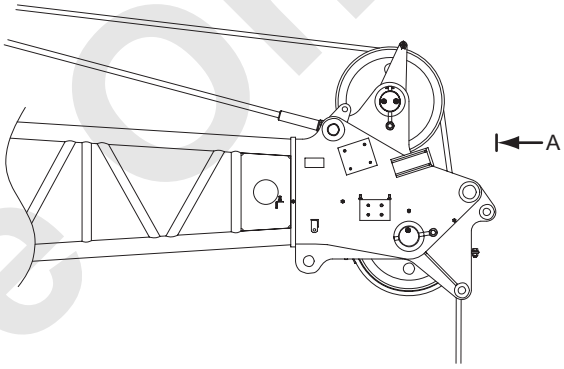

4. Install the overhoist limit switch and weight to the left side bracket on the tip end of the boom. Insert the split pin into the shackle pin to secure it.

5. Pass the front drum wire rope through the hook sheave(s) and boom point sheave(s) in order. Terminate the wire rope end with the rope socket at the boom point for even number part reeving and at the hook for odd number part reeving.
Be sure to pass the wire rope through the hook overhoist limit switch weight.

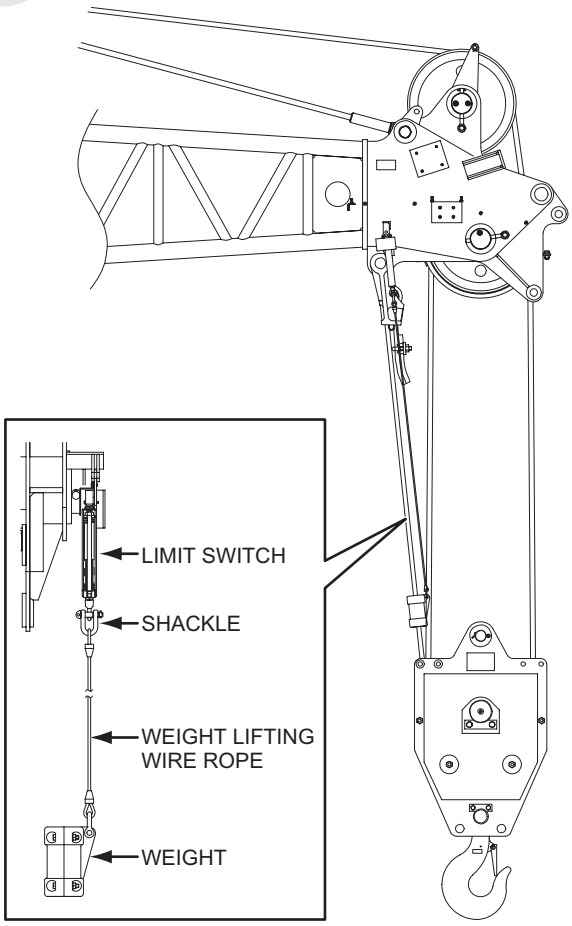

Reference Only

HOIST ROPE REEVING IN BOOM POINT AREA

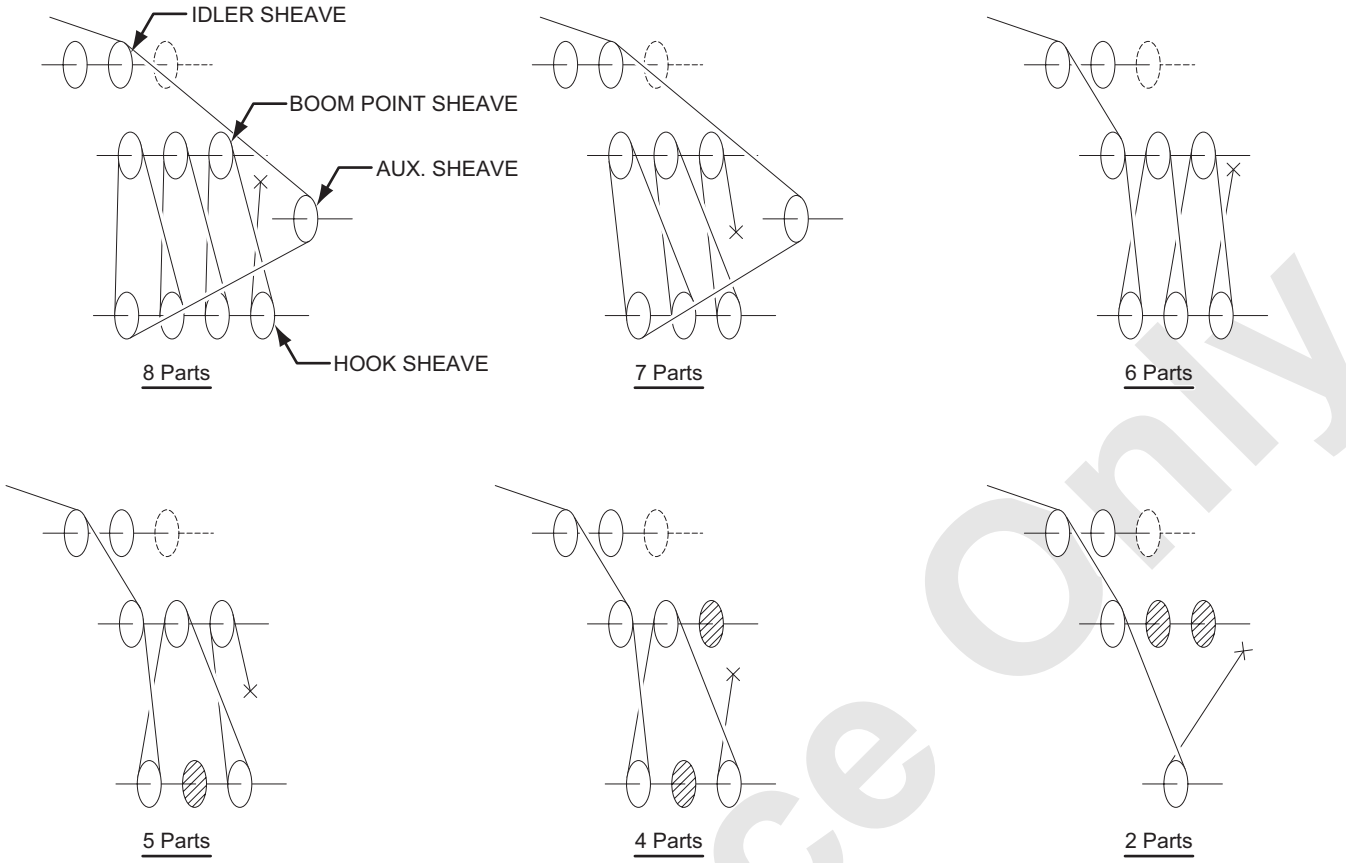

(This figure is view from the boom tip side.)

⚠ CAUTION

When use of 7 and 8 parts of line, require to install the auxiliary sheave block to the boom tip.
As to the installation of auxiliary sheave, refer to the article "5.1.7 INSTALLING THE AUXILIARY SHEAVE" for the detail.

Reference Only

HOOK INSTALLING DIRECTION

When passing the hoist wire rope to the hook, face the striker (hook side weight catch) contacting the hook overhoist limit switch weight to the boom foot side.

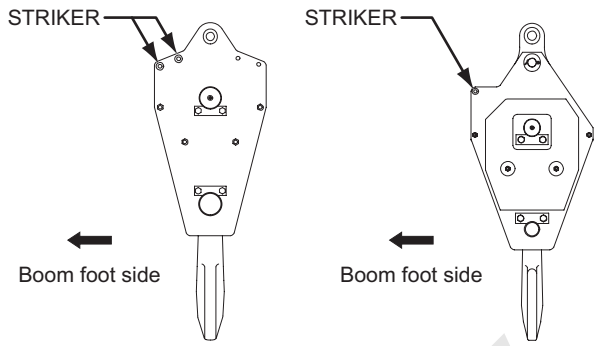

When installing the rope socket to the boom point, pay attention to the direction of rope socket.
Be sure to pass the wire rope through the hook overhoist limit switch weight.

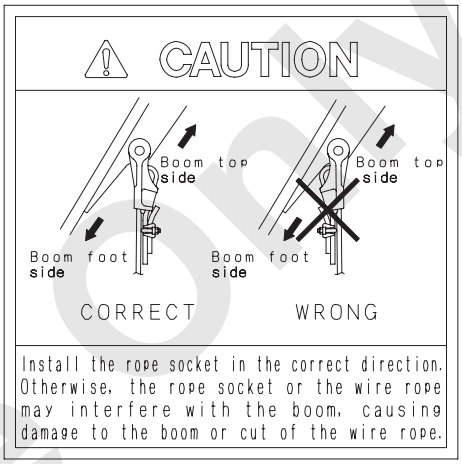

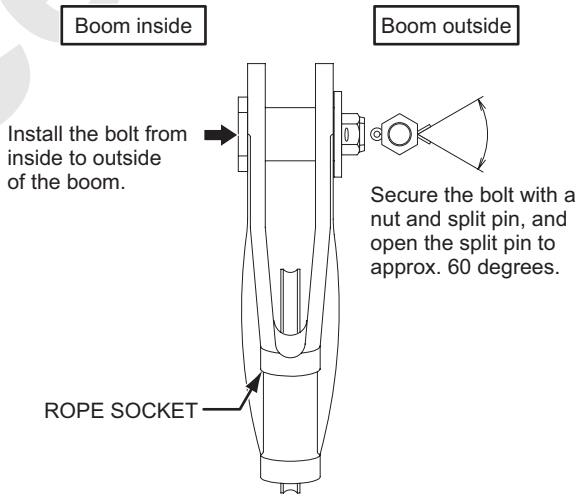

Reference Only

6. Load safety device connection

(1) Secure the junction cables or limit switch wiring to the boom with the hanger.
(2) Connect the attachment wiring to the base machine junction panel.
(3) Check the connection of load detector connector. (Boom hoist winch plate area)
(4) Connect the cable reel wiring to the boom tip junction panel.
(5) Connect the hook overhoist cable reel connector.
(6) Check the connection of hook overhoist limit switch wiring to the boom tip junction panel.

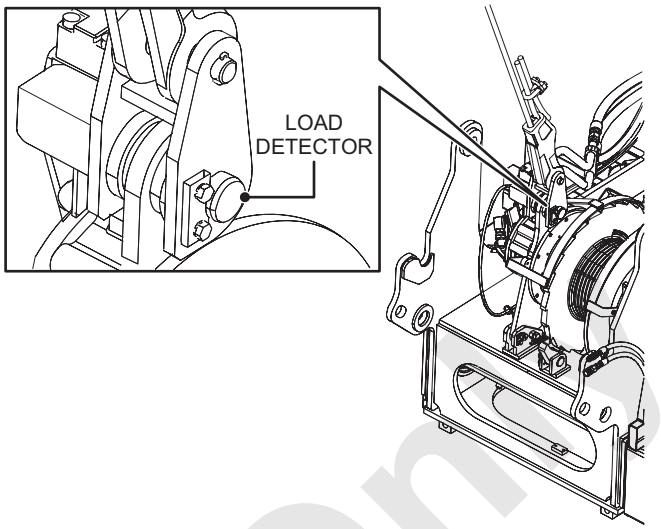

If jib or aux. sheave is not used, connect the hook overhoist limit switch wiring at this time.
For detail of wiring connection, refer to the article “3.3 CONNECTING PROCEDURE OF WIRING”.

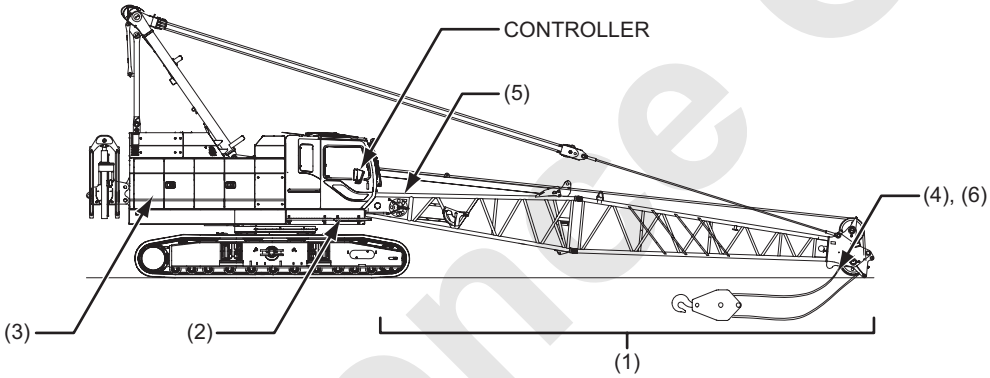

7. Set the crane configuration into the controller (Overload safety device) by referring the article “3.5.1 SETTING OF CRANE CONFIGURATION”.

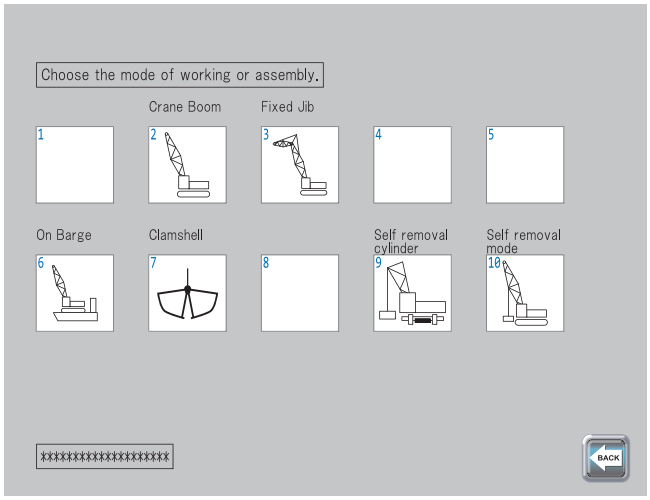

DANGER

Input the crane configuration properly to prevent machine overturning or damage.
Failure to observe this precaution may result in a serious accident.

Type	Type of overhoist	Type of stop	Auto-stop angle
Crane	Boom overhoist	Controller (against ground angle)	Approx. 82 degrees to 82.5 degrees
		Limit switch (against machine angle)	84.5 degrees to 85.5 degrees

Reference Only

4.3.9 CARBODY WEIGHT INSTALLATION (USING SELF REMOVAL DEVICE)

DANGER

Do not enter under the weight or stand between the weight and surrounding object.
Failure to observe this precaution may result in a serious injury or loss of life.

WARNING

Be extremely careful of the ratchet lever hoist handling.
Failure to observe this precaution may result in a serious injury or loss of life.

1. Preparation of carbody weight installation

(1) This machine's carbody weight is composed of two pieces.
Never use the carbody weight other than specified one.

EACH WEIGHT MASS

Carbody weight	Weight
Weight (1)	7.2 t (15,873 lbs)
Weight (2)	7.2 t (15,873 lbs)

(2) Before installing the carbody weight, check that the machine is in the following conditions.

- Boom : Basic boom with 35 t hook, 2 part of line.
- Gantry : Work position
- Ground : Firm and level
- Crawlers : Extended

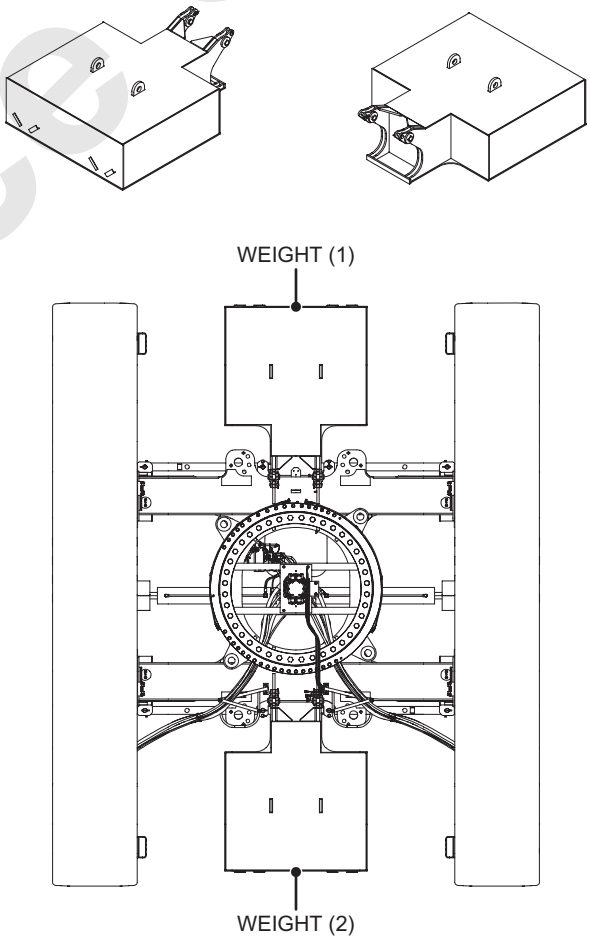

WARNING

As to the stability in swing and traveling to avoid the machine turnover, refer to the article "4.1 SWING AND TRAVEL STABILITY".
Failure to observe this precaution may result in a serious injury or loss of life.

Reference Only

(3) When installing/removing the carbody weight, prepare the tools as listed below.

TOOL

- Attached tool set
- Sling wire rope
  28 mm dia. (1-3/32″ dia.) × 5 m (17′) × 2
- Shackle 5 t (11,025 lbs) × 4
- Ratchet lever hoist 6.3 t (13,890 lbs) × 2

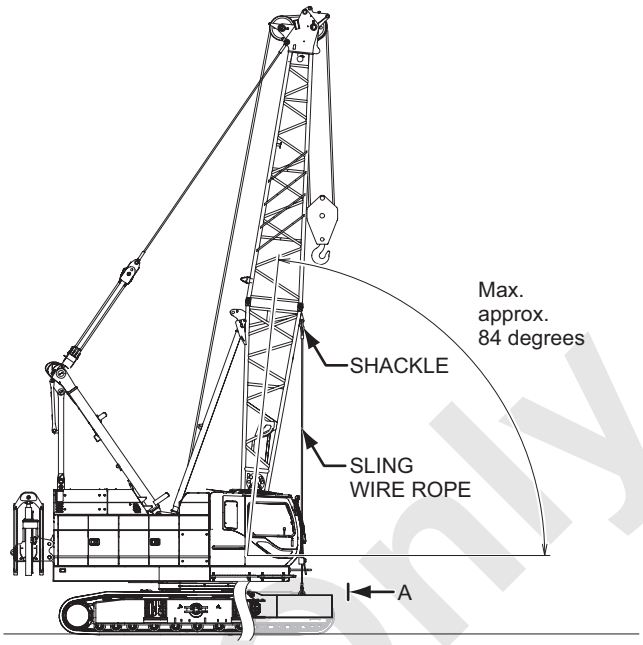

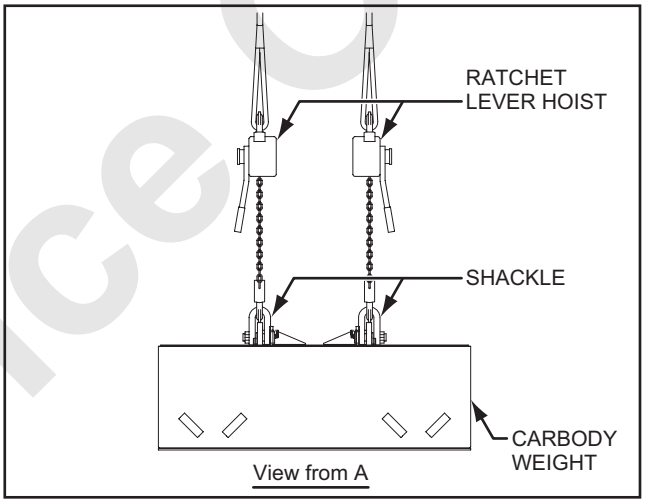

Reference Only

2. Setting of LMI

When removing or installing the carbody weight, set up the LMI as the following.

Note

Unless the setting of load safety device, the auto-stop function will be works and the machine would not be operated.

(1) Press MENU icon on the main screen to display the menu.

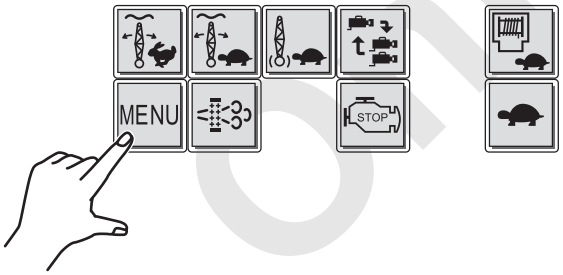

(2) On the selected screen, press icon.

(3) Crane attachment select screen is displayed. Select “10 (Self removal mode)”.

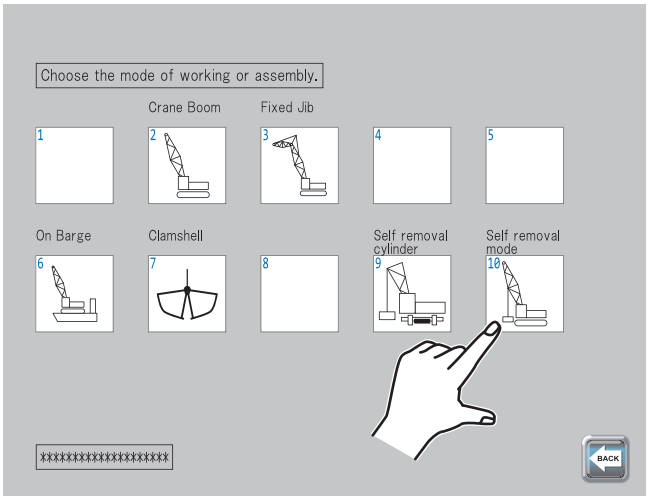

Reference Only

(4) The operation select screen is displayed.
Select “3 (C/W removal mode)”.

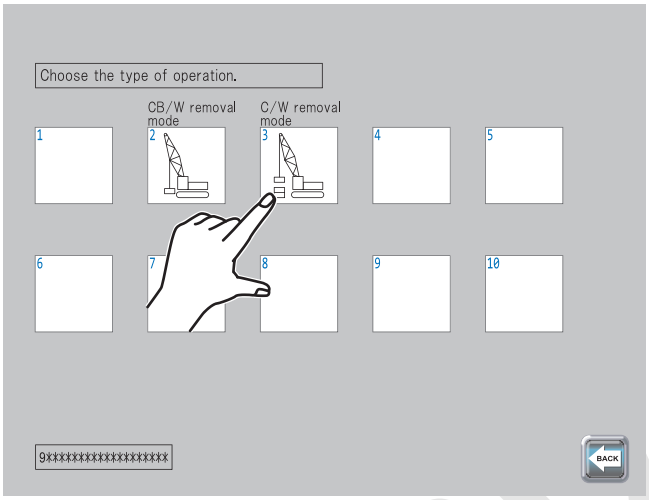

(5) Finally the parts of line input screen is displayed.
Press “0” potion of hook 1.

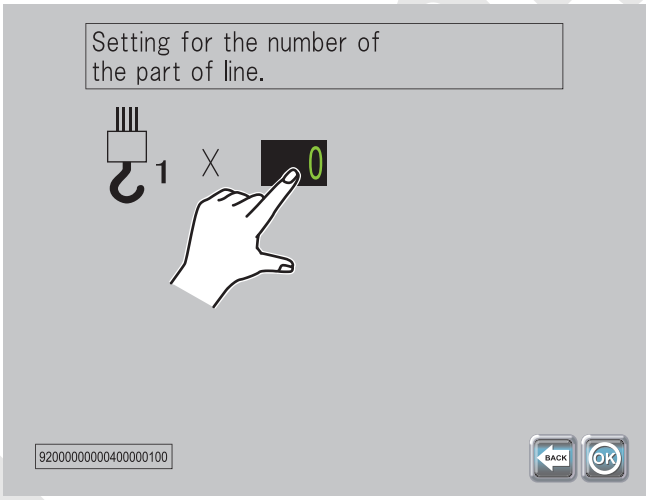

(6) The numeral portion turns highlighting and displayed numerical keypad.
Press “2”.

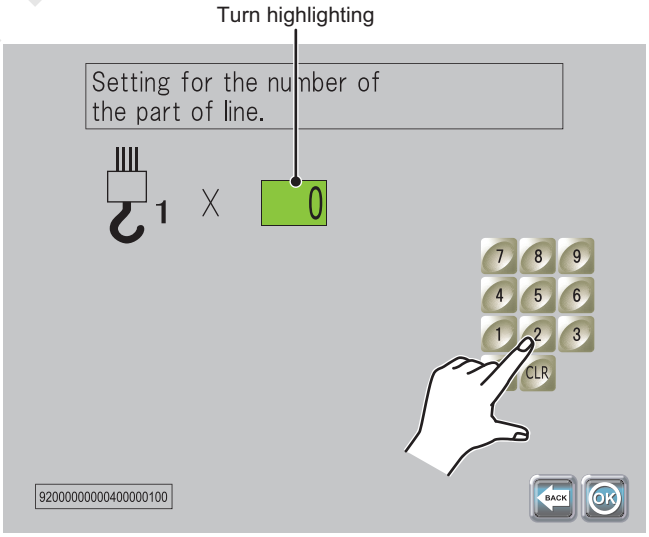

Reference

(7) Press OK.

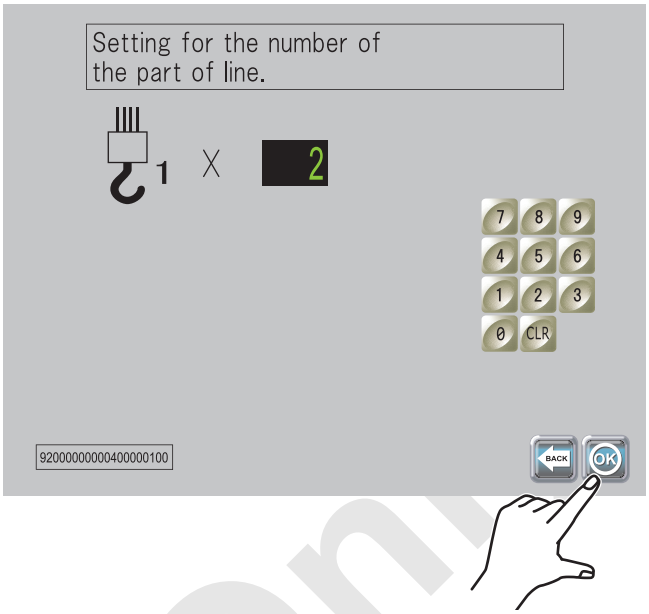

(8) Data is being loaded.

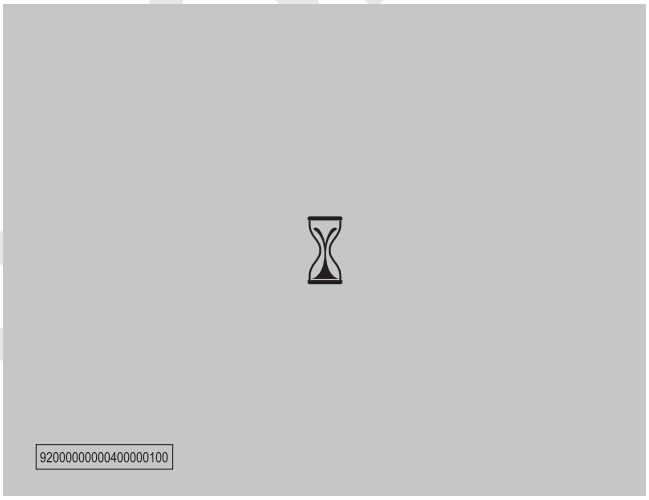

(9) After data is loaded, the result of selection is displayed.
Check if the selected items are correct.

- If correct, press OK.
  The screen returns to the main screen.
- If not correct, press LIFTER to restart the input.

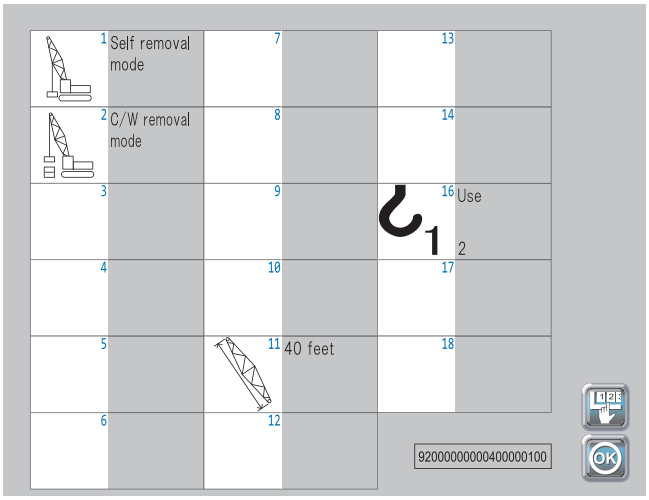

Note

In case the selection is limited to only one choice, select screen is to be neglected and indicates only the result.

Reference only

3. Place the carbody weight on the ground.

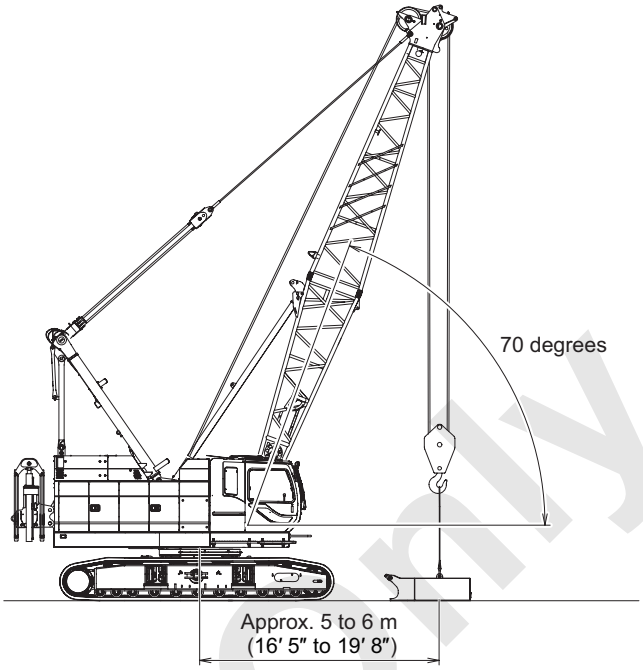

4. Move the machine closer to the carbody weight to approx. 3.9 m (12 ft. 10 in.) point.

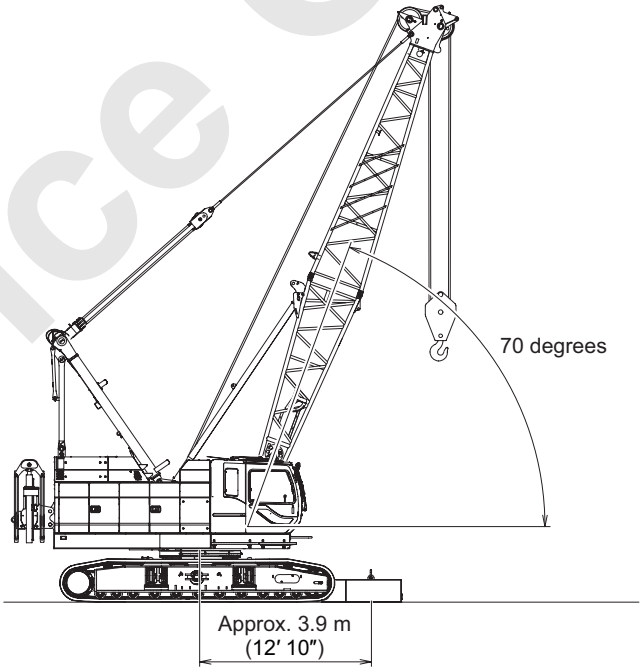

Reference Only

5. Place the boom tip on the ground.

(1) Lower the boom until auto-stop occurs.
When the boom automatically stops, indicate warning code [ME007] on the monitor display.

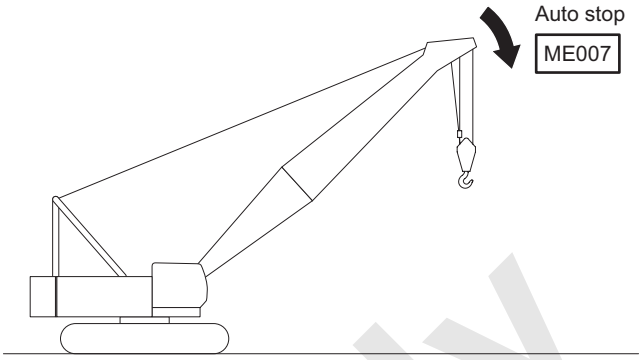

(2) When the crane auto-stops, press (Boom, jib lowering icon) in the monitor for more than 1 second.
The crane is turned to boom lowering mode and auto-stop is released and boom lowering becomes possible.

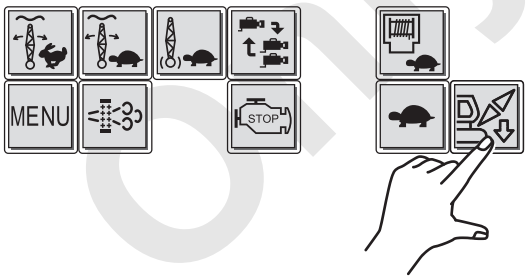

Auto stop is released

Note

Press (assy/disassy icon), (boom, jib lowering icon) for more than 1 second.

(3) However when the weight of hook overhoist limit switch contacts the ground, auto-stop occurs due to hook overhoist preventive device.
When the boom automatically stops, indicate warning code [ME017] on the monitor display.

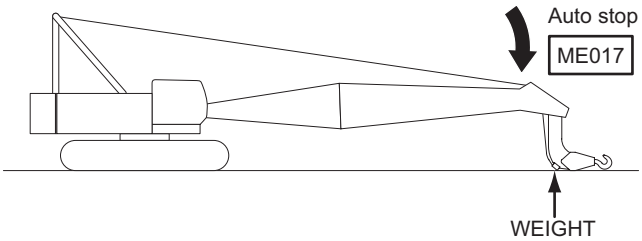

(4) To lower the boom further, return the control lever to neutral once and press (assy/disassy icon) for one time (1 second).
Then the crane turns to assy/disassy mode and auto-stop due to hook overhoist is released and boom lowering becomes possible.

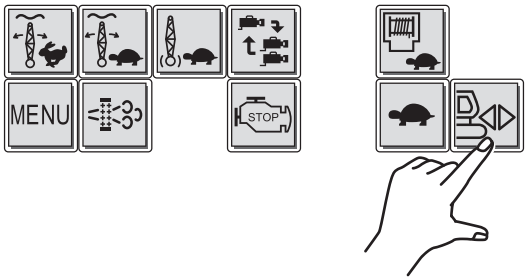

Auto stop is released

Note

Press (assy/disassy icon), (boom, jib lowering icon) for more than 1 second.

Reference Only

6. Set the slings, shackles and ratchet lever hoist for the carbody weight lift.

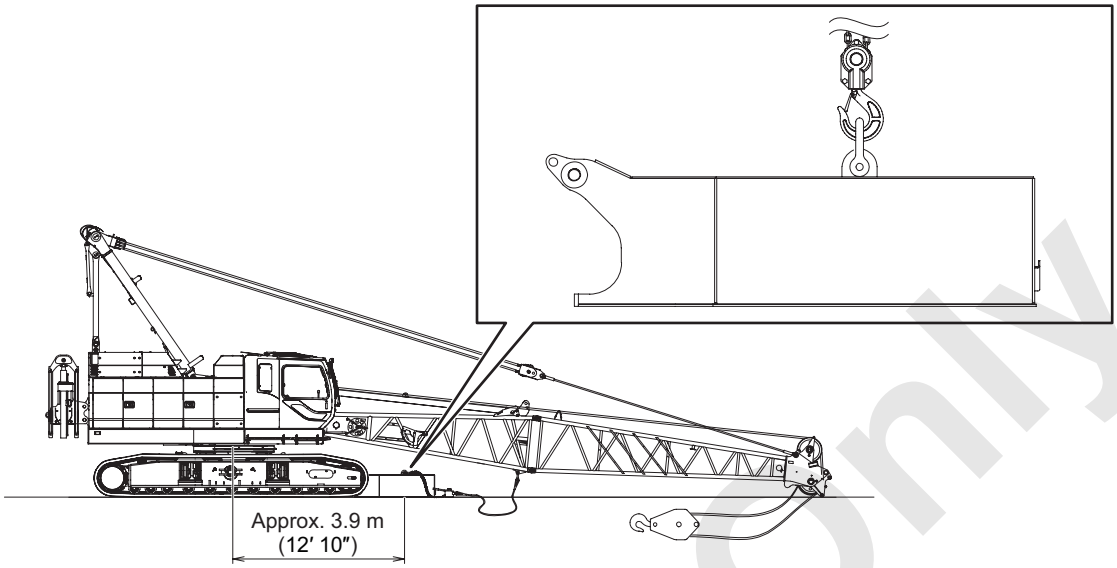

7. Setting of LMI

(1) Press MENU icon on the main screen to display the menu.

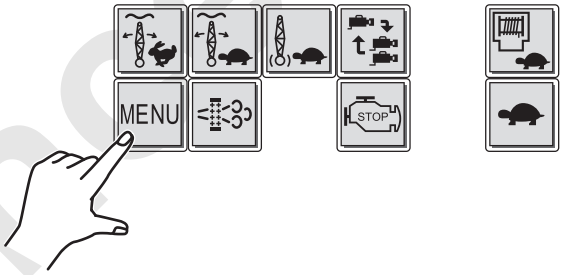

(2) On the selected screen, press icon.

Reference Only

(3) Crane attachment select screen is displayed.
Select “10 (Self removal mode)”.

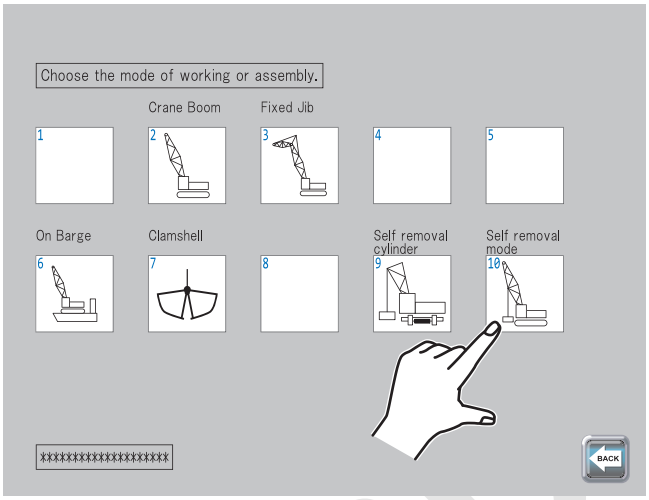

(4) The operation select screen is displayed.
Select “2 (CB/W removal mode)”.

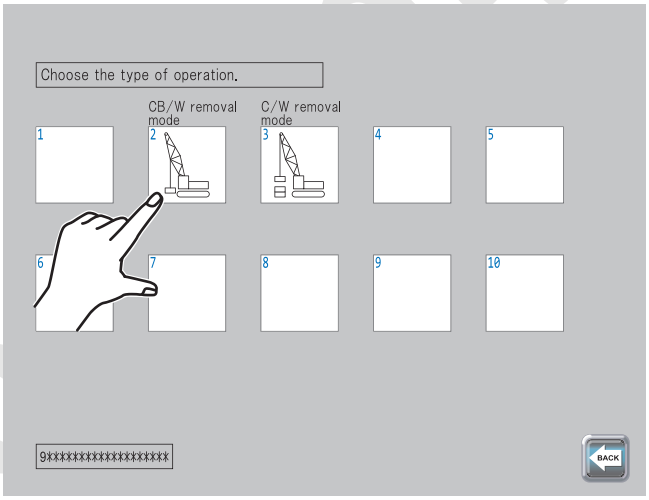

(5) Finally the parts of line input screen is displayed.
Press “0” potion of hook 1.

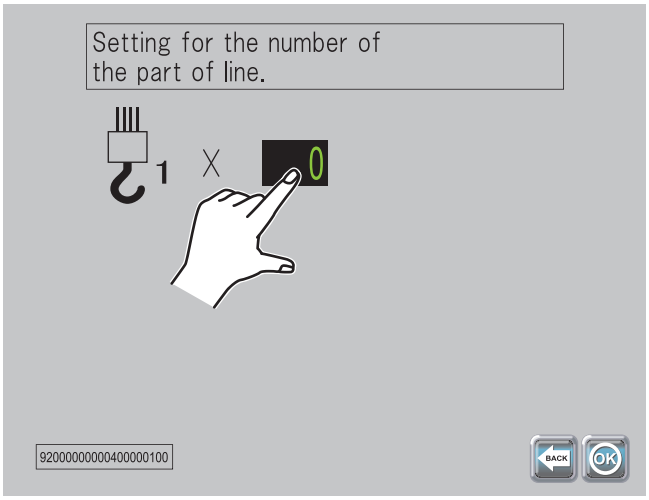

Reference only

(6) The numeral portion turns highlighting and displayed numerical keypad.
Press “2”.

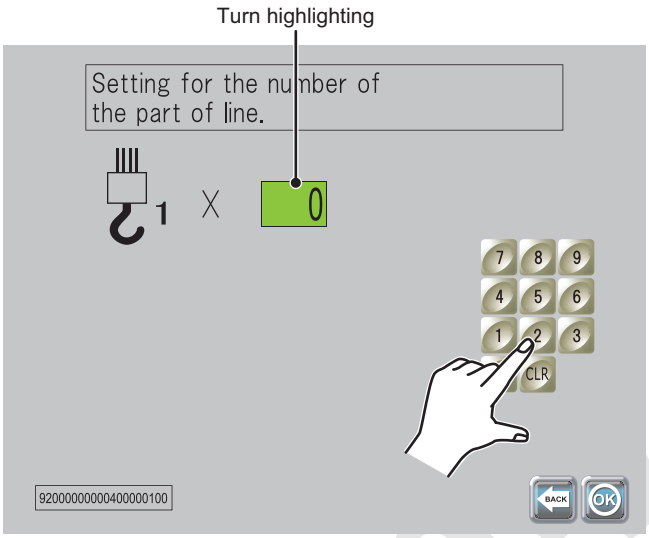

(7) Press OK.

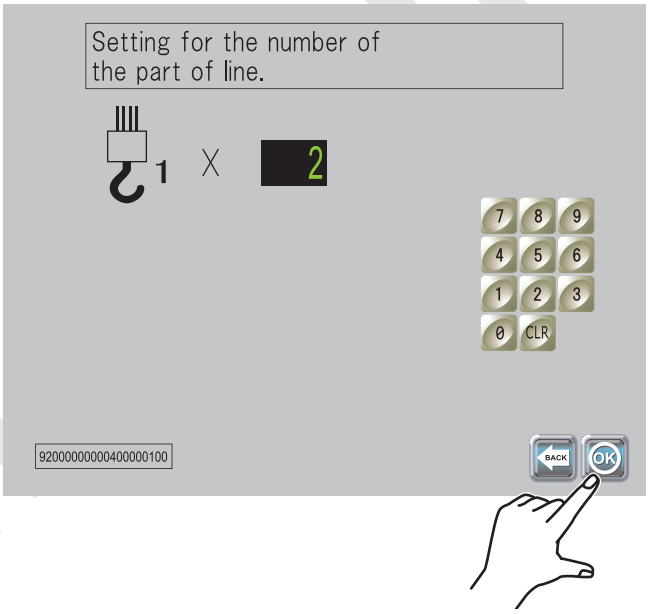

(8) Data is being loaded.

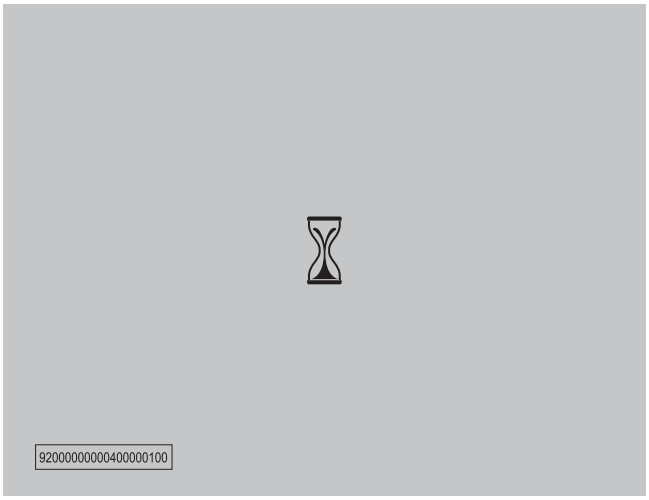

Reference

(9) After data is loaded, the result of selection is displayed.
Check if the selected items are correct.

- If correct, press OK.
  The screen returns to the main screen.
- If not correct, press to restart the input.

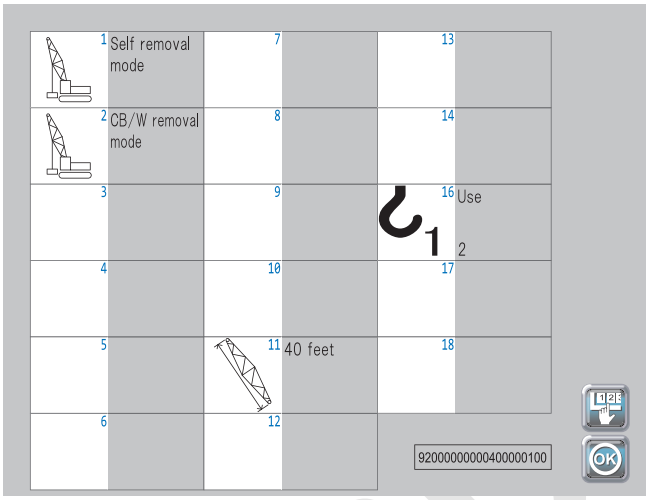

Note

In case the selection is limited to only one choice, select screen is to be neglected and indicates only the result.

8. Lift up the carbody weight slightly.

9. Swing the upper machinery for approx. 4.5 degrees.

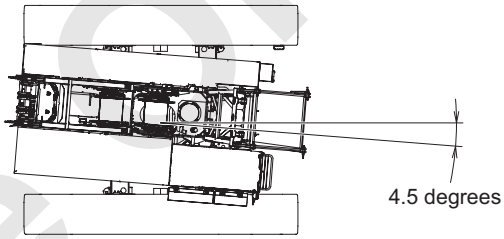

Reference Only

10. Raise the boom to bring the carbody weight closer.

11. Bring the carbody weight (a) portion to right above the carbody side hanging bracket and align with it.

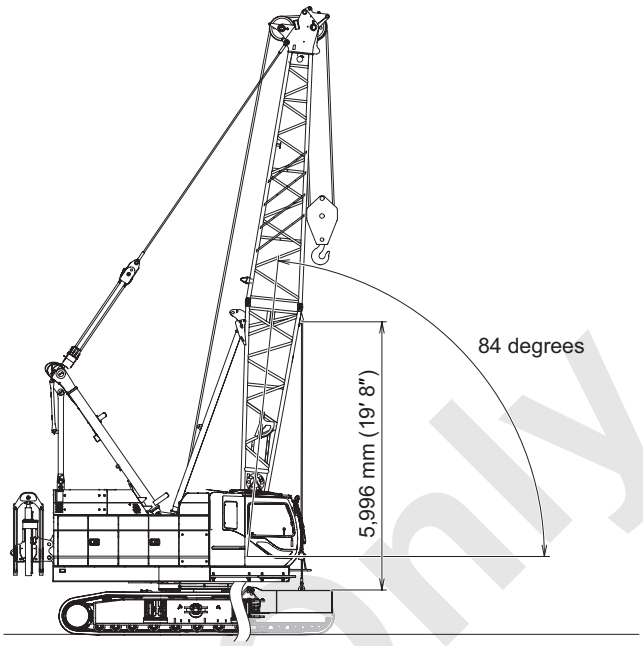

DANGER

Do not enter under the weight or stand between the weight and surrounding object.
Failure to observe this precaution may result in a serious injury or loss of life.

WARNING

Be extremely careful of the ratchet lever hoist handling.
Failure to observe this precaution may result in a serious injury or loss of life.

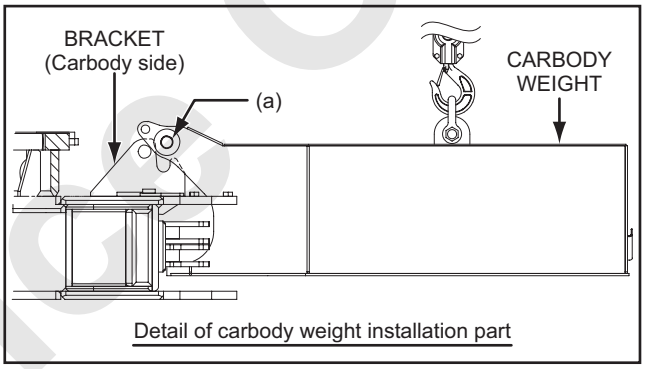

Detail of carbody weight installation part

Reference Only

12. Lower the ratchet lever hoist and rest the carbody weight (a) portion to the carbody side hanging bracket.

WARNING

Be extremely careful of the ratchet lever hoist handling.
Failure to observe this precaution may result in a serious injury or loss of life.

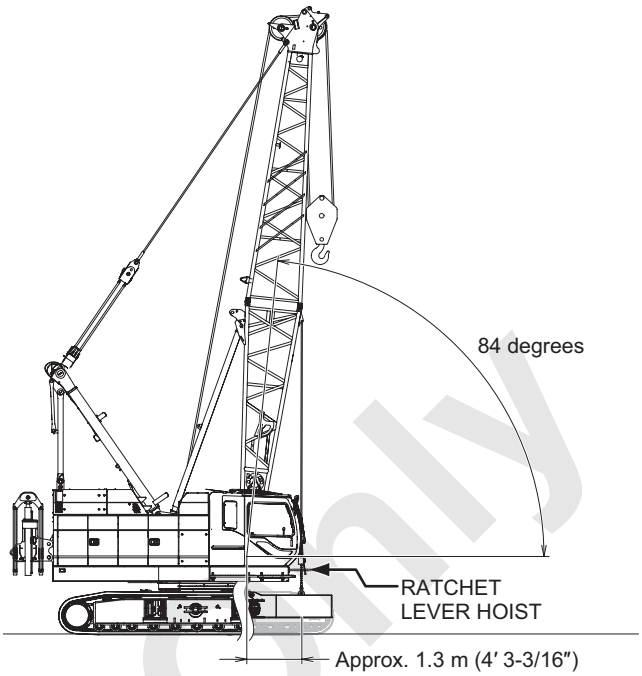

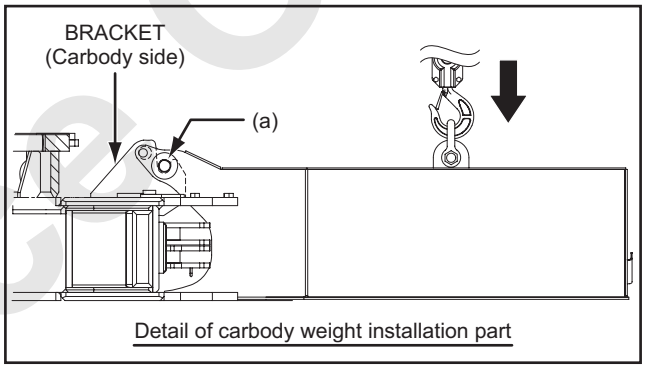

Detail of carbody weight installation part

Reference Only

13. Insert the carbody weight installation pin and secure the pin with spring pin.
    (2 places both left and right side)

WARNING

Do not insert finger or hand into a pin hole when aligning, inserting or removing pin.
Failure to observe this precaution may result in a serious injury or loss of life.

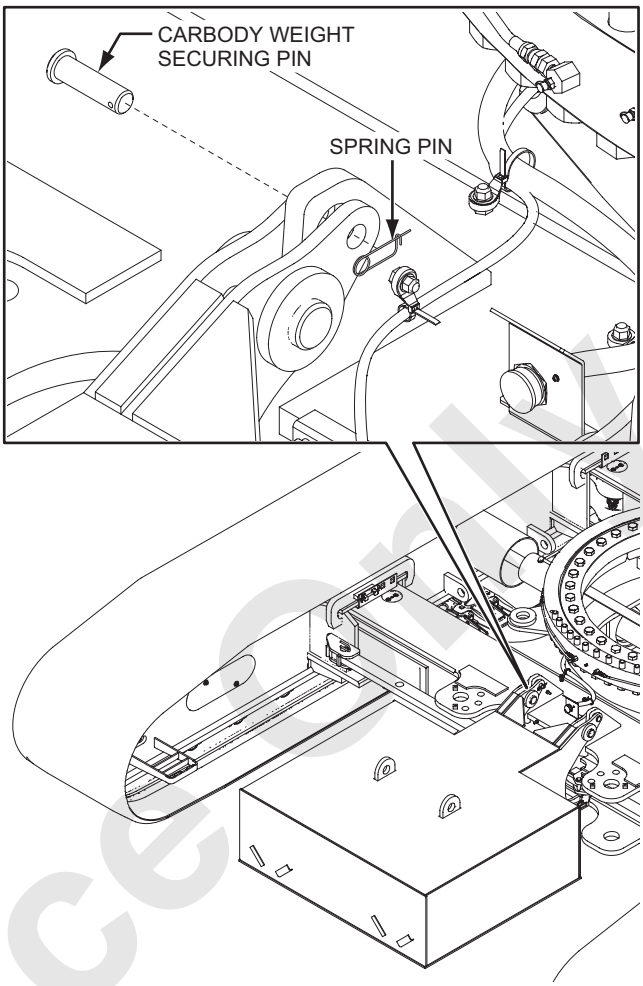

14. Install the carbody weight (2) as same manner as carbody weight (1).

Reference Only

15. In case of the carbody weight detecting unit is equipped (option)

- Connect the detect harness installed on the front side weight (1) and base machine harness (CN-914F) and both water proof caps.
- Detect harness installed on the rear side weight (2) is not required to connect. (No harness is provided on the base machine rear side)
- If the carbody is not equipped as use of reduced weight specification, leave the base machine harness and water proof cap as is.

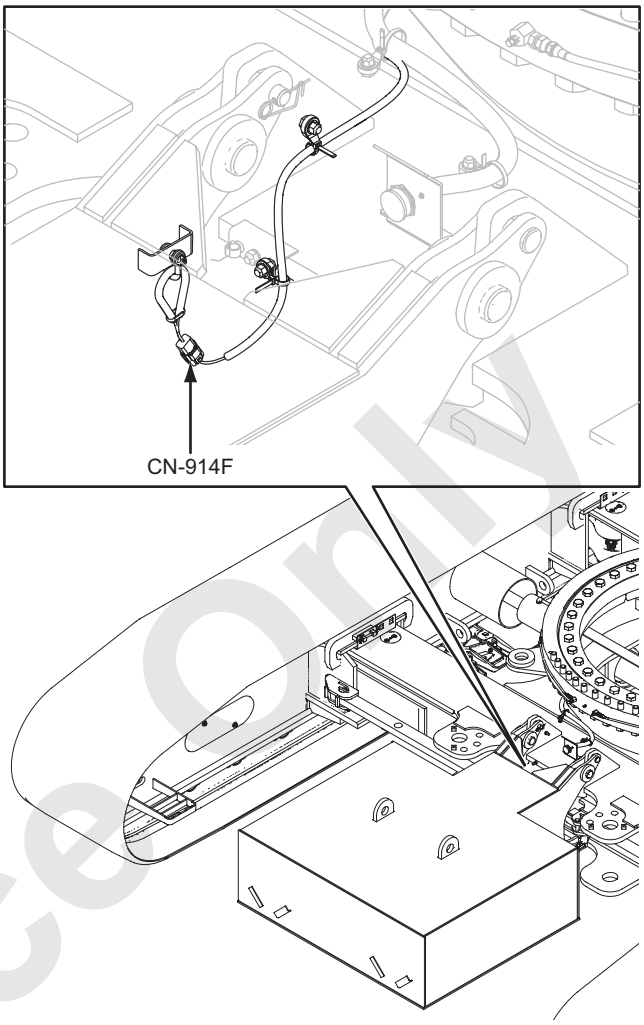

- When setting the LMI, ensure to select the item matched with the actual weight configuration.
  If wrong item is selected, an error [ML-ME064] will appear on the monitor and buzzer will sound.

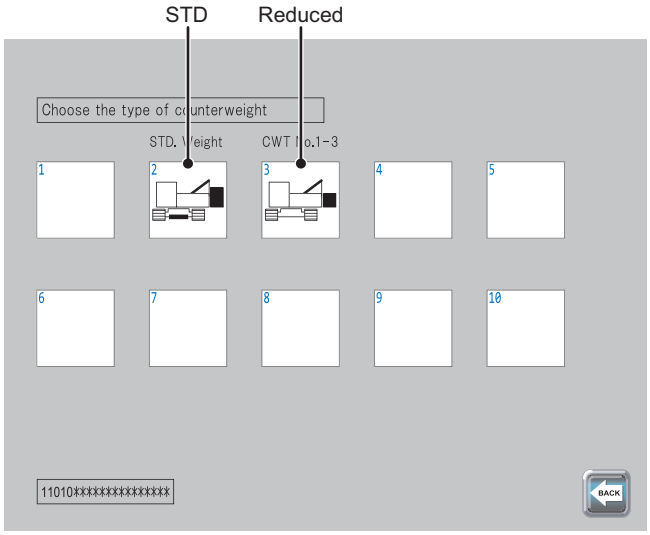

Note

In case the carbody weight is not equipped as reduced weight specification, leave the base machine harness with cap as is.

Reference Only

4.3.10 ASSEMBLING THE COUNTERWEIGHTS (USING SELF REMOVAL DEVICE)

DANGER

Do not enter under the revolving frame or counterweight.
Swing while the crawlers retracted with the counterweight installed may result in machine overturning.
Failure to observe these precautions may result in a serious injury or loss of life.

Counterweight of this machine is composed of 5 pieces.
Do not transport the machine with counterweight on.
Firmly tighten the counterweight installation bolts to prevent them from becoming loose during work.
Never use the counterweight other than specified one.

EACH WEIGHT MASS

Counterweight	Weight
WEIGHT (1)	8.31 t (18,300 lbs)
WEIGHT (2), (4)	5.75 t (12,680 lbs)
WEIGHT (3), (5)	5.75 t (12,680 lbs)

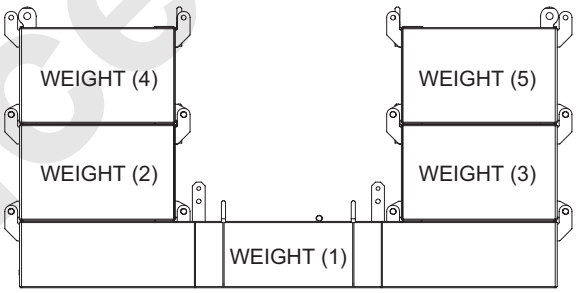

Reference Only

1. Setting of LMI

   When removing or installing the counterweight, set up the LMI as the following.

Note

Unless the setting of load safety device, the auto-stop function will be works and the machine would not be operated.

(1) Press MENU icon on the main screen to display the menu.

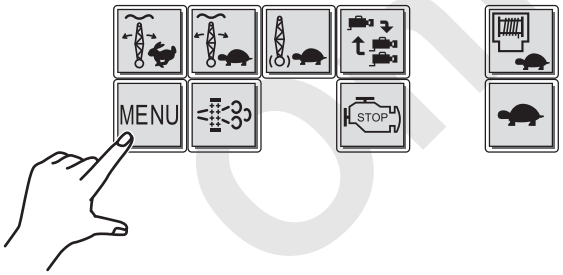

(2) On the selected screen, press icon.

(3) Crane attachment select screen is displayed. Select “10 (Self removal mode)”.

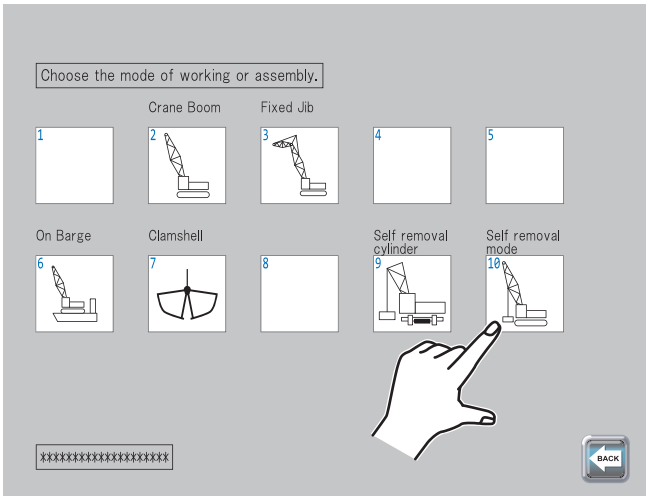

Reference Only

(4) The operation select screen is displayed.
Select “3 (C/W removal mode)”.

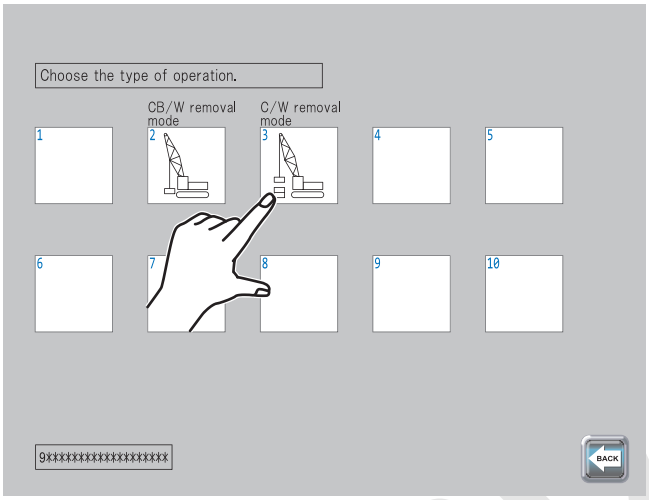

(5) Finally the parts of line input screen is displayed.
Press “0” potion of hook 1.

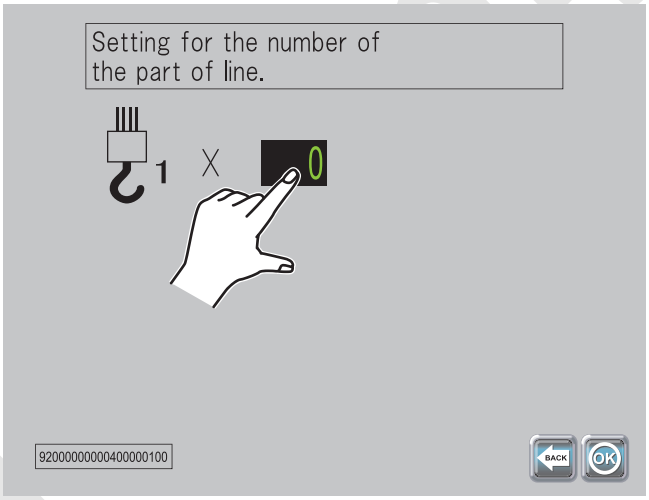

(6) The numeral portion turns highlighting and displayed numerical keypad.
Press “2”.

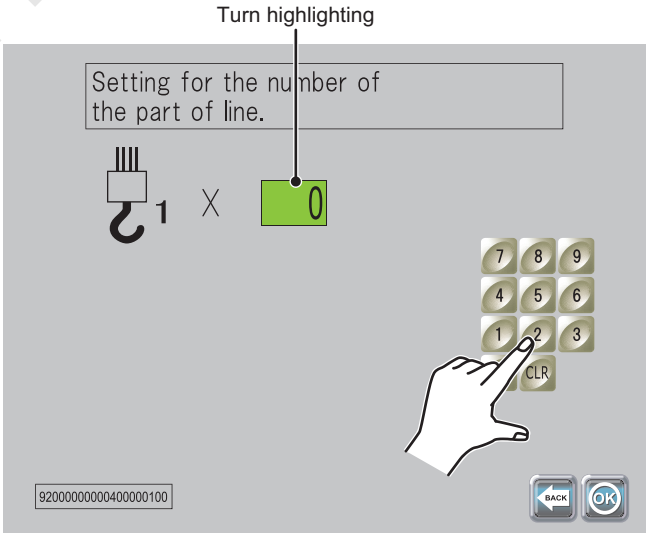

Reference

(7) Press OK.

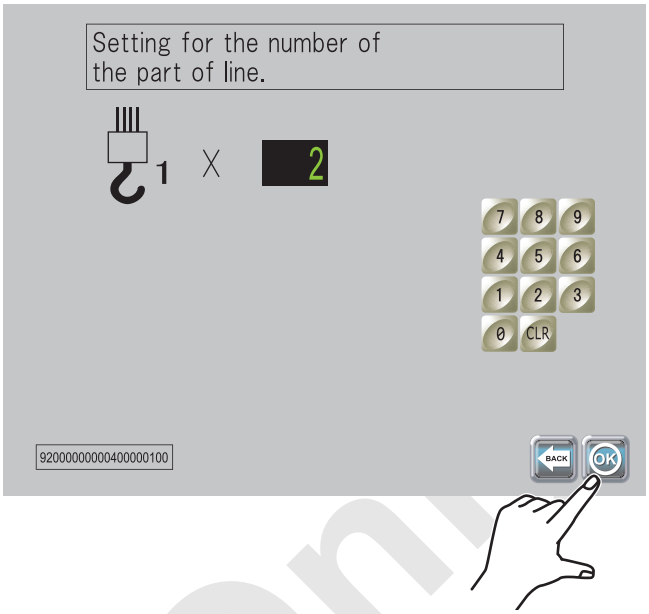

(8) Data is being loaded.

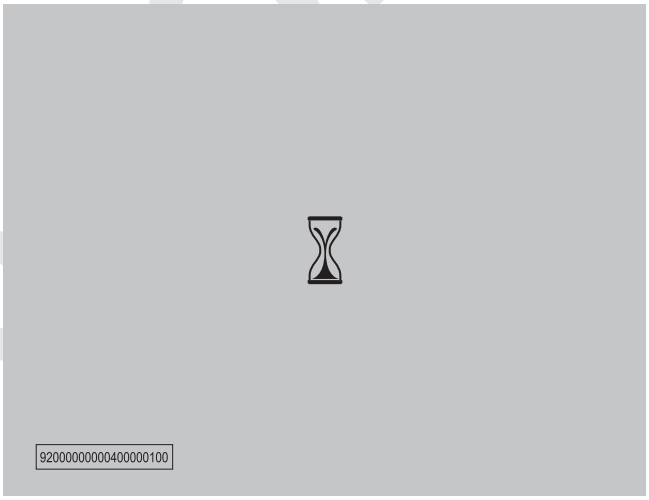

(9) After data is loaded, the result of selection is displayed.
Check if the selected items are correct.

- If correct, press OK.
  The screen returns to the main screen.
- If not correct, press to restart the input.

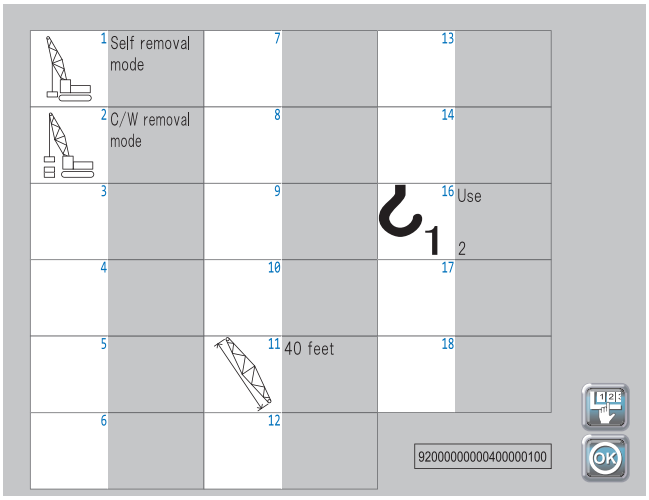

Note

In case the selection is limited to only one choice, select screen is to be neglected and indicates only the result.

Reference only

2. Preparation of counterweight installation

Prior to install the counterweight, confirm the following conditions are satisfied.

- The ground for assembling is firm and level.
- The base machine is in work condition.
- Secure the place for counterweight assembling.
- Place blocking on the ground where the counter weight (1) to be placed.

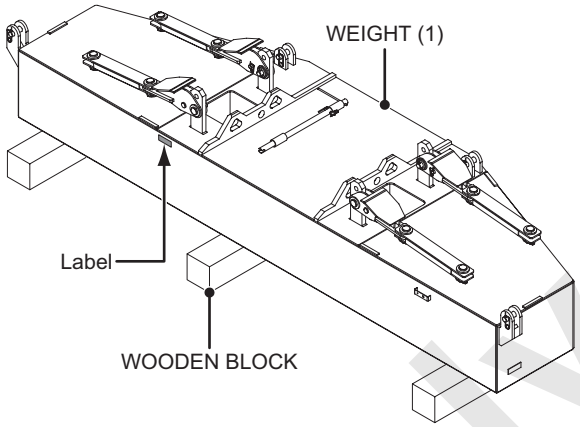

CAUTION

Check the labels to confirm that the counterweights are of the specified ones for this machine before assembling.

(1) Attach the slings to lifting brackets and lift the weight (1) and place it on the blocking.

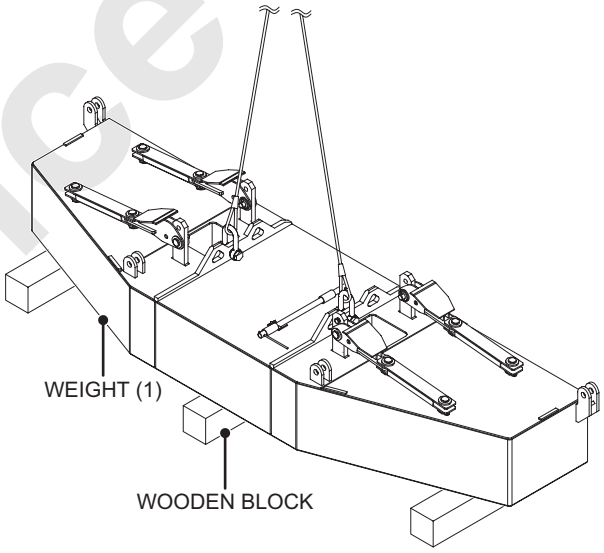

Reference Only

(2) As to the front side links, the link (a) to be leaned on to the lifting bracket and the link (b) turns backward.
(3) As to the rear side the links, link (a) to be made vertical and secure with securing pin and the link (b) turns backward.

WARNING

Do not insert finger or hand into a pin hole when aligning, inserting or removing pin.
Failure to observe this precaution may result in a serious injury or loss of life.

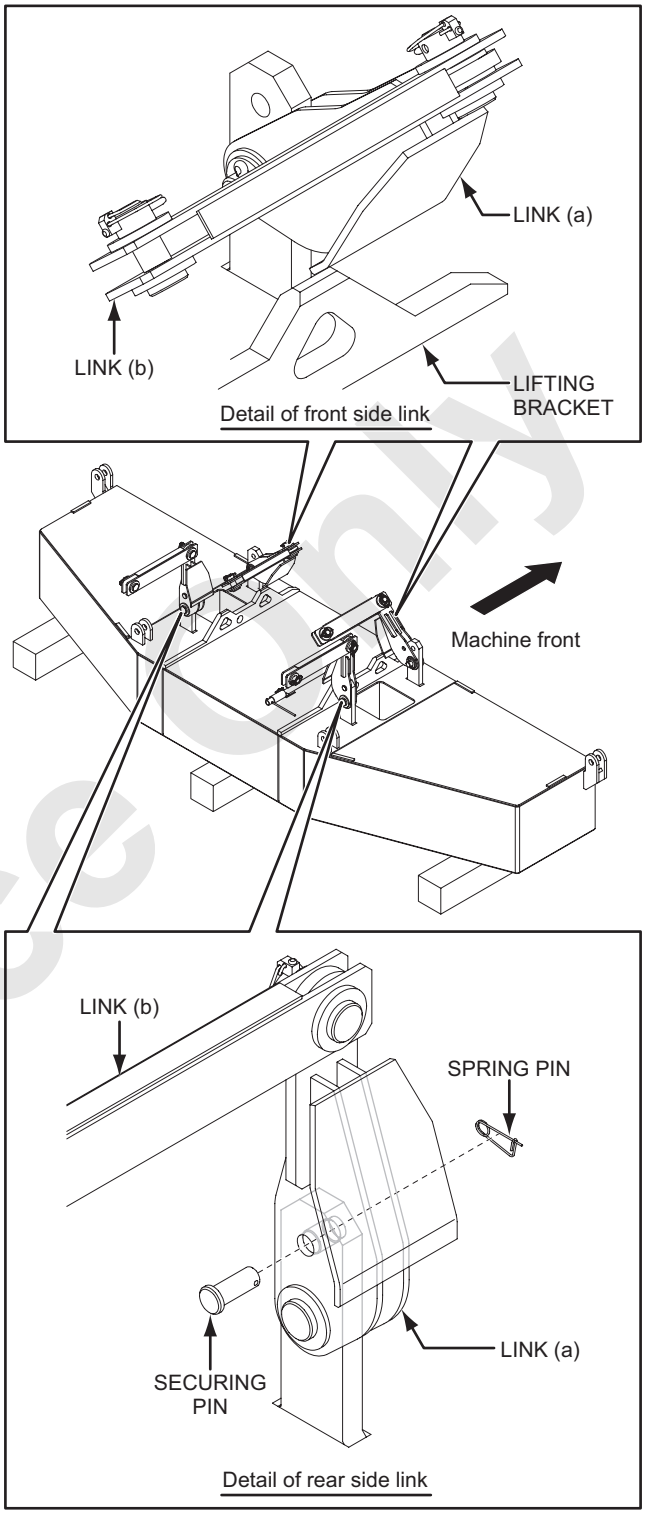

Reference Only

(4) Place the weights (2) and (3) in order onto the weight (1).

WARNING

Do not lift more than one weights at a time.
Lifting brackets may break.
Failure to observe this precaution may result in a serious injury or loss of life.

DANGER

Do not enter under the weight or stand between the weight and surrounding object.
Failure to observe this precaution may result in a serious injury or loss of life.

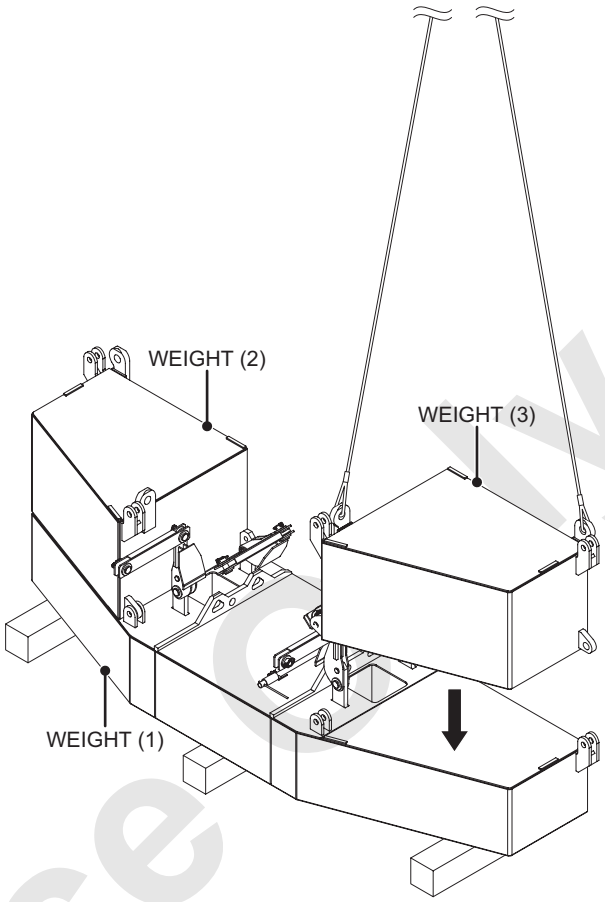

(5) Place the weights (4) and (5) in order.

WARNING

Do not lift more than one weights at a time.
Lifting brackets may break.
Failure to observe this precaution may result in a serious injury or loss of life.

DANGER

Do not enter under the weight or stand between the weight and surrounding object.
Failure to observe this precaution may result in a serious injury or loss of life.

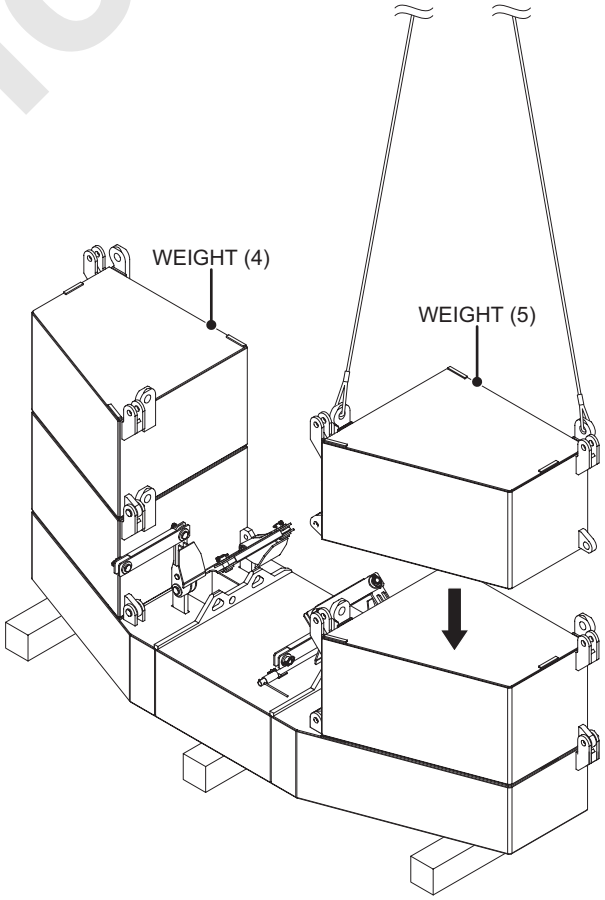

Reference Only

(6) Secure right and left counterweights with the securing pins accordingly and retain the securing pins with the spring pins. (8 locations)

WARNING

Do not insert finger or hand into a pin hole when aligning, inserting or removing pin.
Failure to observe this precaution may result in a serious injury or loss of life.

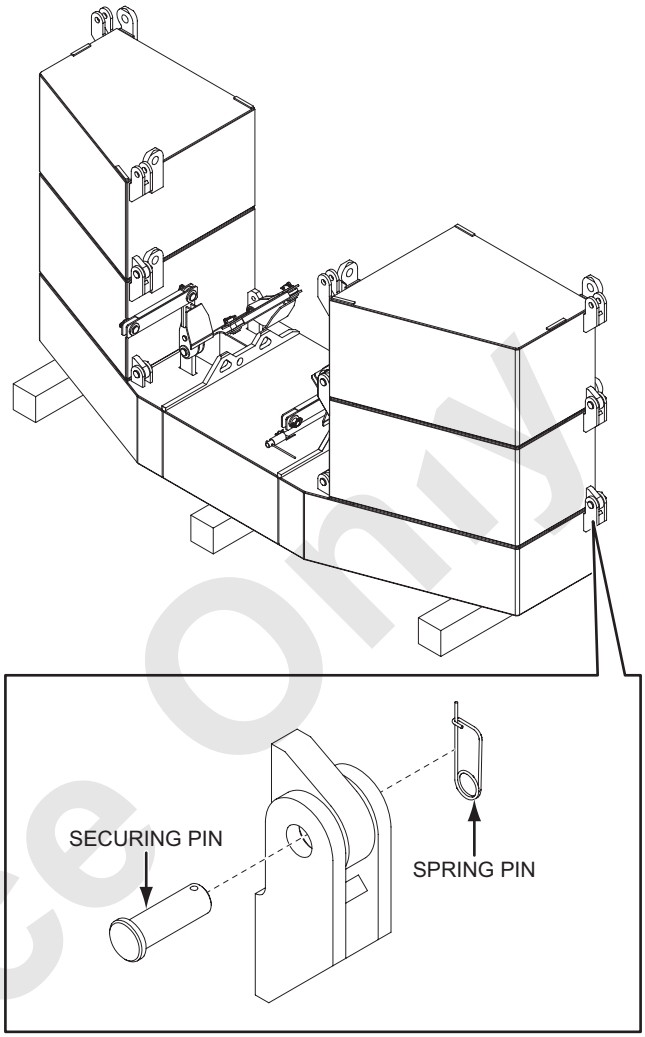

Reference Only

4.3.11 MOUNTING THE ASSEMBLED COUNTERWEIGHT TO BASE MACHINE (USING SELF REMOVAL DEVICE)

DANGER

Do not enter under the weight or stand between the weight and surrounding object.
Failure to observe this precaution may result in a serious injury or loss of life.

WARNING

Place a signalman to prevent an incident from caught.
Failure to observe this precaution may result in a serious injury or loss of life.

WARNING

Ensure the ground for operation is firm and level and place the steel plate or improve the ground condition as required.
Failure to observe this precaution may result in a serious accident.

WARNING

Place the planking as steel plates if the inclination is 1% or more to the base machine horizontal.
If in the case of 1 % or more inclination, the self removal cylinder and/or its rods may damage due to uneven loads would be received.
Failure to observe this precaution may result in a serious accident, injury or loss of life.

CAUTION

Perform the work with engine speed 1,000 min^{-1} (1,000 rpm) or less.
If exceeded, the cylinder speed becomes faster and excessive force could be applied on the cylinder at start or stop of motion.
This may damage the cylinder rod.
Failure to observe this precaution may lead to damage parts.

Reference Only

1. Travel the machine to the position that the counterweight lifting links can be connected to the counterweight lifting point.

DANGER

Do not enter under the weight or stand between the weight and surrounding object.
Failure to observe this precaution may result in a serious injury or loss of life.

WARNING

Assign the signalman at visible place from the operator.

CAUTION

Slowly travel the machine while paying attention to prevent any interference of the base machine with the counterweights.
Failure to observe this precaution may lead to damage parts.

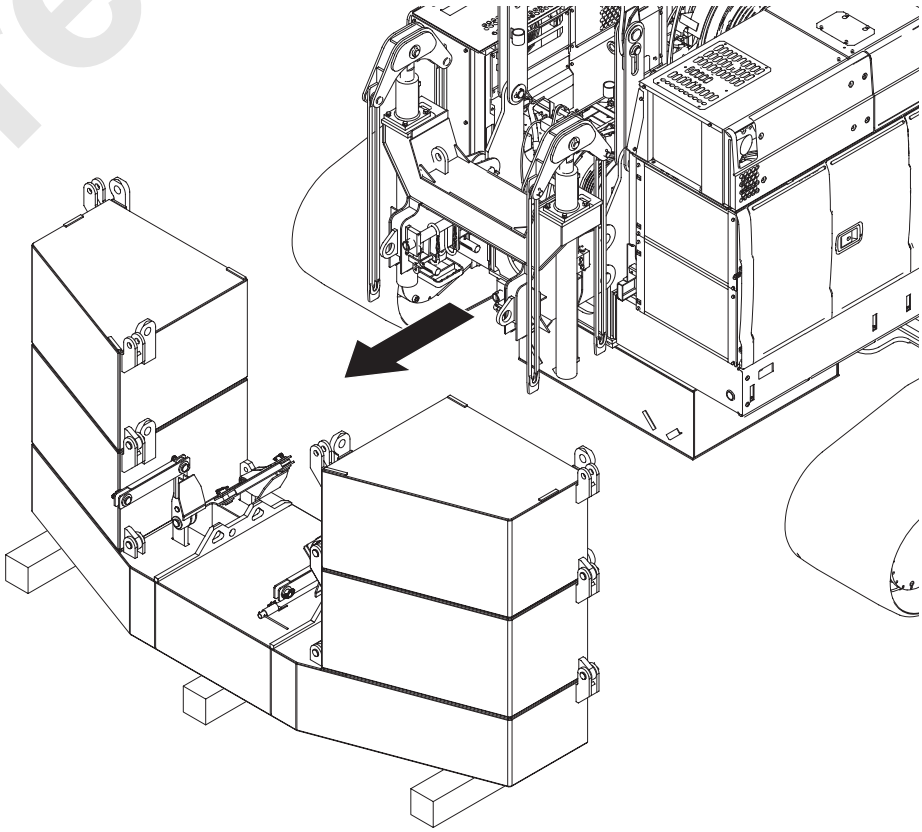

Reference Only

2. Set the machine horizontally.

DANGER

When the translifter is to be used, remove the counter weights and carbody weights.
If the translifter is used with these weights, the machine turnover or damage the translifter may be caused.
Failure to observe this precaution may result in a serious accident.

WARNING

Place the planking as steel plates if the inclination is 1% or more to the base machine horizontal.
If in the case of 1 % or more inclination, the self removal cylinder and/or its rods may damage due to uneven loads would be received.
Failure to observe this precaution may result in a serious accident, injury or loss of life.

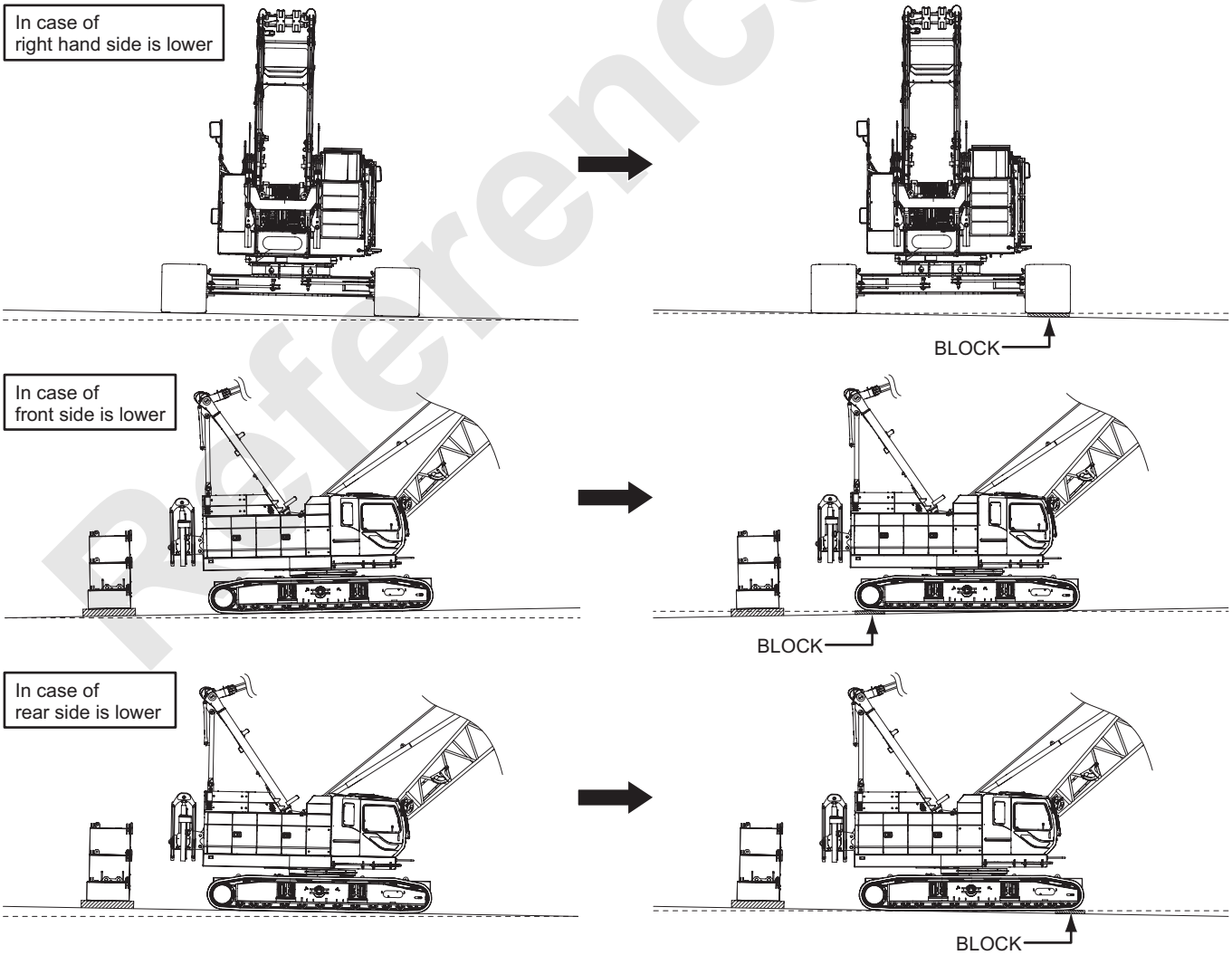

Reference Only

3. As to the rear side links, the link (b) to be raised and connect with the link (c).

4. As to the front side links, raise the links (a) and (b) so that not to interfere with self-removal cylinder.
   Connect the link (b) with the link (c) and secure the link (a) with the securing pin.

WARNING

Do not insert finger or hand into a pin hole when aligning, inserting or removing pin.
Failure to observe this precaution may result in a serious injury or loss of life.

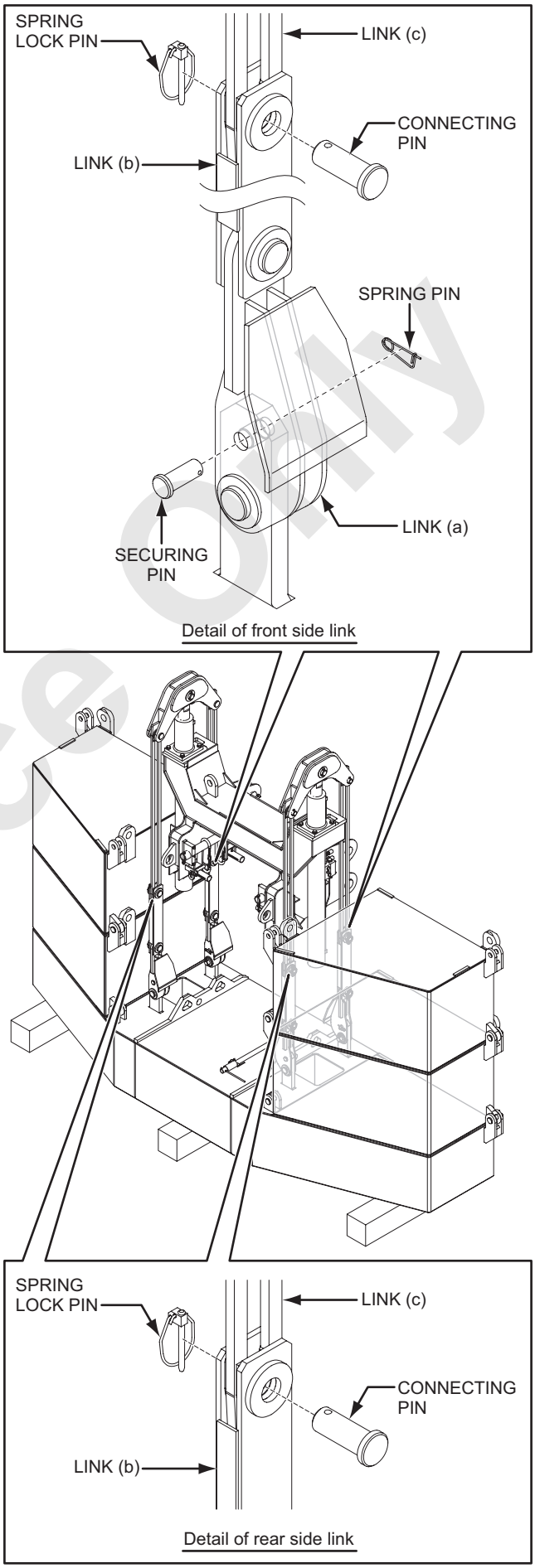

Reference Only

5. Disengage the counterweight securing pin with using the extension bar.

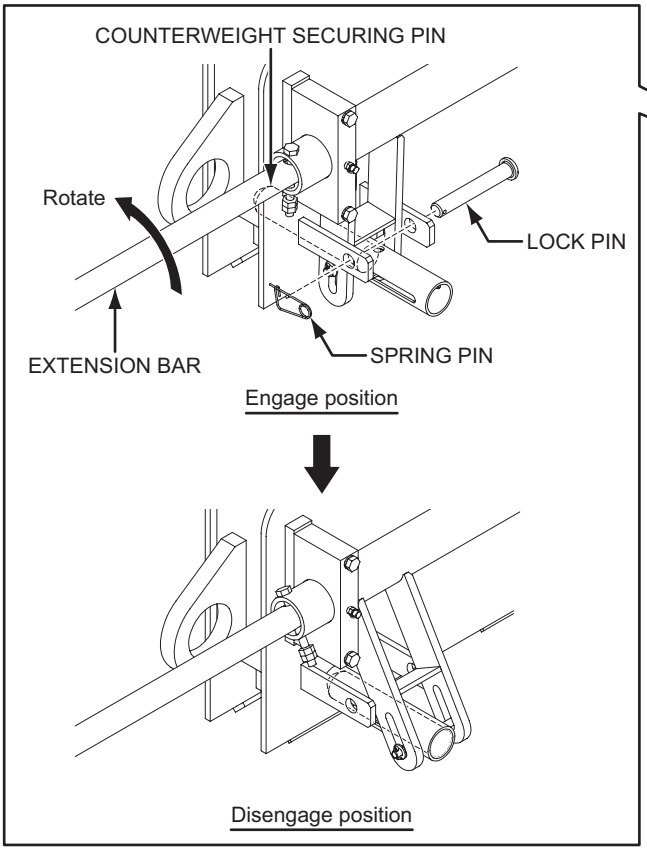

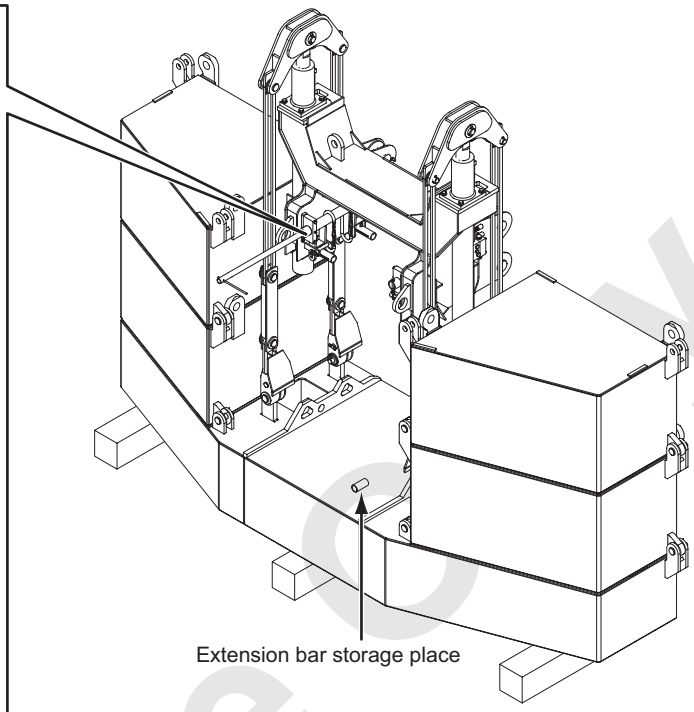

6. Connect the remo-con cable to the connecting portion on the self-removal device.

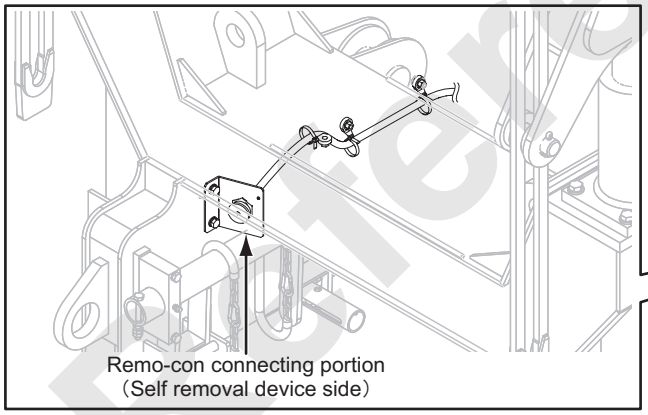

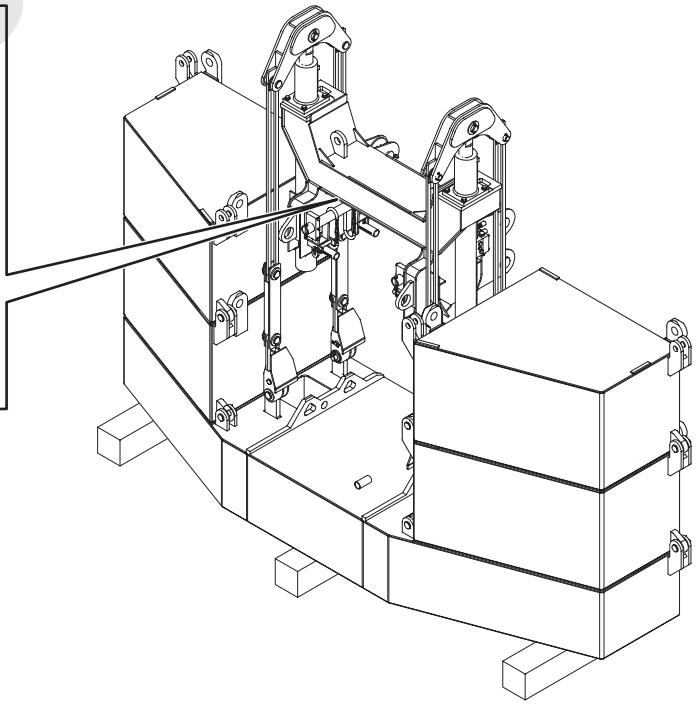

Reference Only

7. Start the engine with the remote control and the speed to approx. 1,000 min^{-1} (1,000 rpm).

8. Operate the remote control to lift the counter weight.

DANGER

Do not enter under the weight or stand between the weight and surrounding object.
Failure to observe this precaution may result in a serious injury or loss of life.

DANGER

When raising or lowering the counterweight, keep the both counterweight cylinders even by operating the both at the same time.
If the counterweight becomes uneven, ALWAYS correct the situation by RISING the "LOWER" side. If the higher side's cylinder is lowered, the load will be concentrated on that cylinder and may be damaged.
Failure to observe this precaution may lead to damage parts.

WARNING

Slowly control lifting/lowering the counterweight.
Failure to observe this precaution may result in a serious accident.

CAUTION

While installing and removing the counterweight, ensure the remote control cable not to get caught.

CAUTION

When use of self-removal device for assembling/disassembling of the counterweight, ensure that the remote control cable should not get caught between the frame of self-removal device and the counterweight.

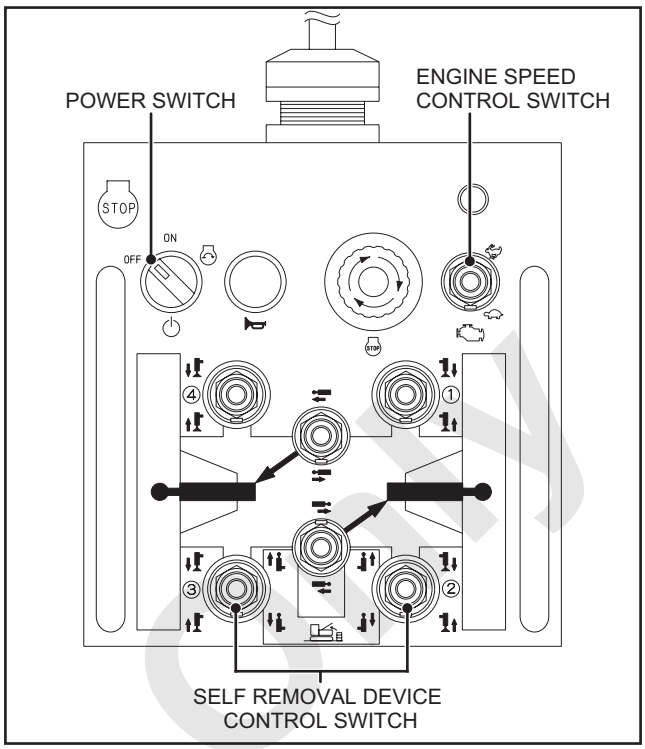

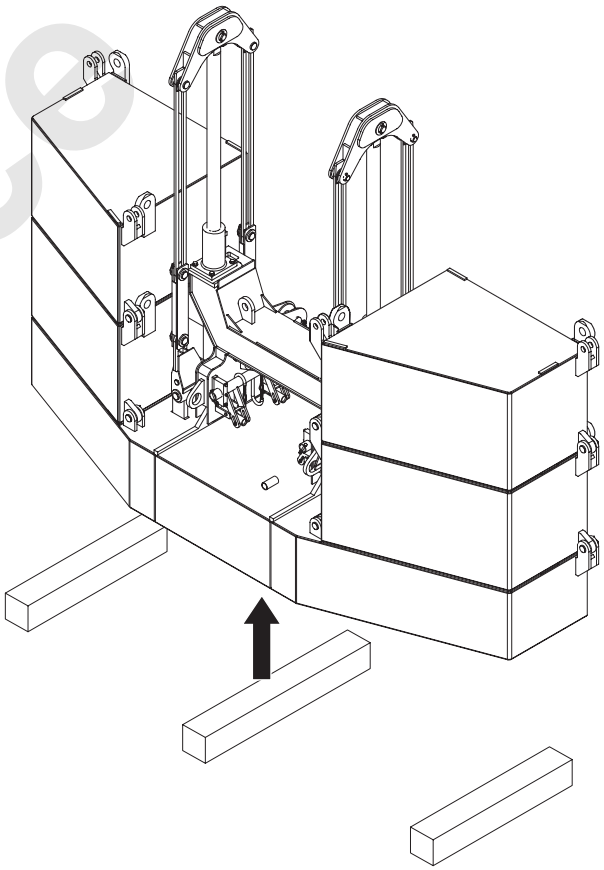

Reference Only

9. Set the counterweight securing pins on both sides with using the extension bar.
   After inserting the securing pin, the extension bar to be kept to the storage place on the counterweight (1).

10. Retract the cylinder by approx. 50 mm (2 in.).
    The counterweight unit is now supported by counterweight securing pins.

11. Go up onto weight (1) with using a ladder.
    Set the lock pin and spring pin on both sides.

⚠ WARNING

When working at a high elevation, be sure to use a safety belt to prevent falling.
Failure to observe this precaution may result in a serious injury or loss of life.

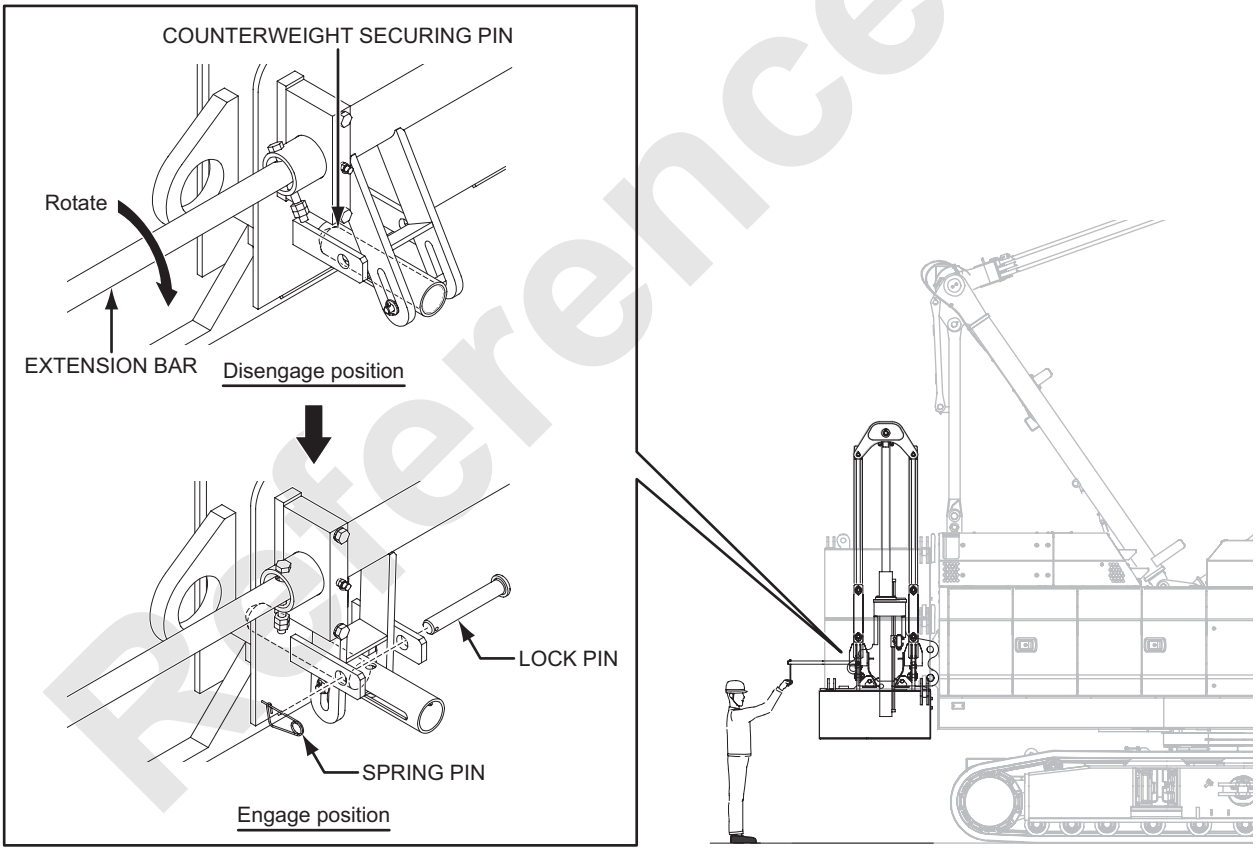

Reference Only

12. Fully retract the cylinders by controlling the remote control switch.

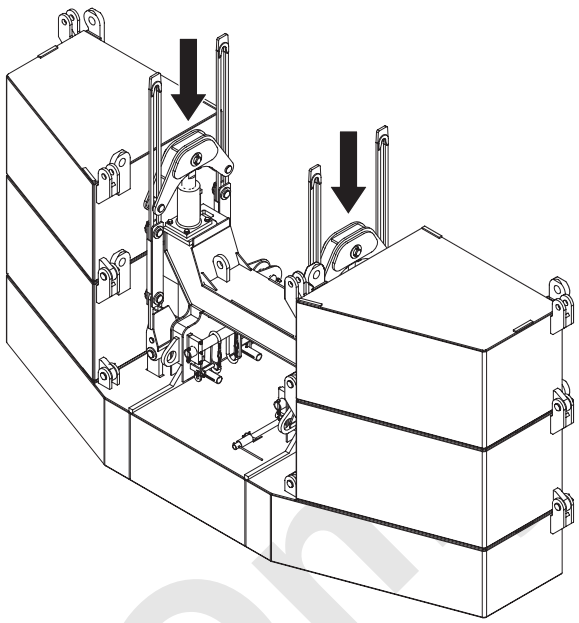

13. Stop the engine with the remote control switch and disconnect the remote control cable connector on self-removal device.

Reference Only

14. In case of counterweight quantity detect device is equipped (option).

- Connect all harnesses among the base machine and each counterweights.
- All the water proof caps also connect together respectively.
- After connection is completed, secure the harness with the cramps provided.
- If the number of weight is less as use as reduced weight, connect the base machine harness from the lower side in order.

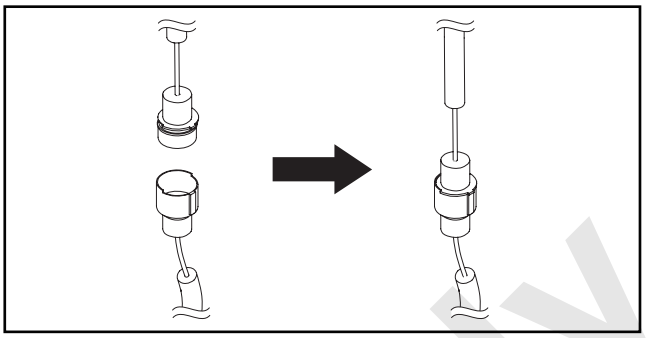

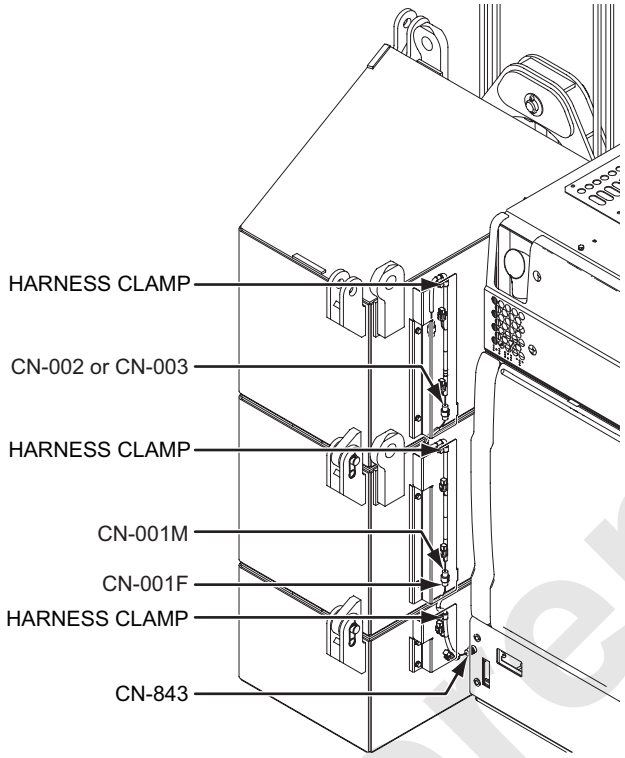

Standard counterweight configuration

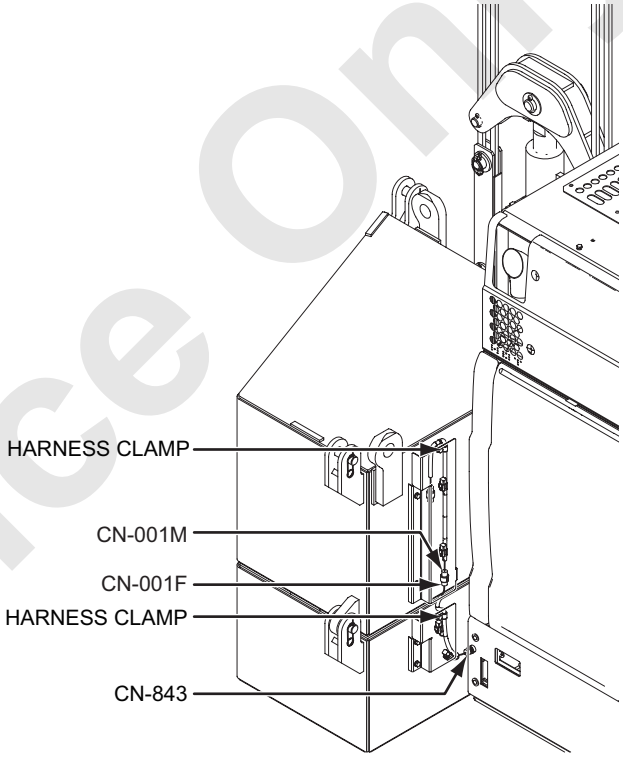

Reduced counterweight configuration

- When setting the LMI, ensure to select the item matched with the actual weight configuration. If wrong item is selected, an error [ML-ME063] will appear on the monitor and buzzer will sound.

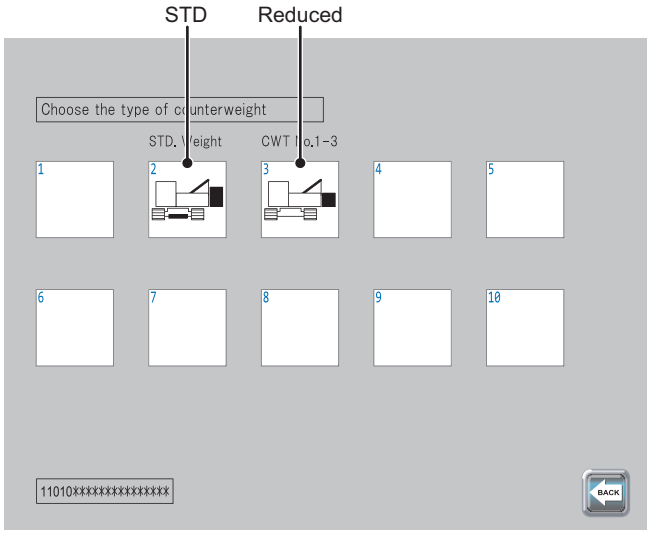

Reference Only

4.4 DISASSEMBLY OF BASE MACHINE

This article explains disassembly of base machine and loading to trailer for transportation.

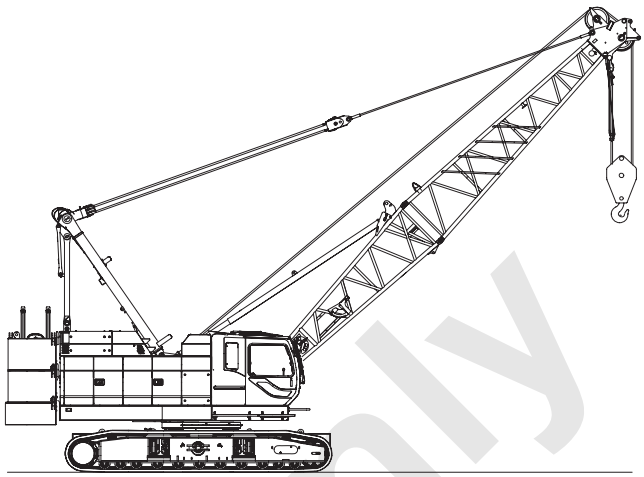

WARNING

Any work on the base machine would be dangerous if proper procedure is not taken.
Hold a pre-work meeting to go over the procedure to prevent accident and proceed with the work safely.
Failure to observe this precaution may result in a serious injury or loss of life.

WARNING

Do not insert finger or hand into a pin hole when aligning, inserting or removing pin.
Failure to observe this precaution may result in a serious injury or loss of life.

WARNING

- **The ground where base machine is placed during assembly/disassembly may receive large load.**
- **Ensure the ground for operation is firm and level and place the steel plate or improve the ground condition as required.**
  Failure to observe this precaution may result in a serious accident.
- **Use proper rated assist crane, slings, shackles and other equipment.**
  Failure to observe these precautions may result in a serious accident.

Reference Only

1. Check points prior to work

- A qualified supervisor who is competent in the procedures.
- Hold a pre-work meeting for safety.
  Review potential hazards and hazardous locations in the course of work.
- Make every worker aware of work contents, procedure and signal.
- Inspect assist crane and other equipment for their condition.

2. Securing place

- Select a firm and level space enough for the task.
  Place the planking such as steel plates or crane mats on the ground as required.
- Assign areas for the assist crane, parts storage and trailer access.

3. Preparation before assembling/disassembling work

- Secure the setting place of assist crane and prepare the required lifting gears, protective materials and tools.
- Secure required number of workers for the work.
  (Crane operators, assistant operators, slinging workers and signal persons)
- Take appropriate action to keep unrelated person off the work area other than workers during work.

4. Cautions during assembly/disassembly work

- During work, install the waterproof cap on the cable end of the hook overhoist preventing device.
  During crane work, remove the waterproof cap and wire the overhoist cable properly.
- Refer to the article “8.2 DIMENSION, WEIGHT OF EACH COMPONENT” for weight, dimension during work.
- The operator has to be informed if any person moved to out of sight from the operator or at hazardous location when equipment or machine part moves.

Reference Only

4.4.1 REMOVE THE COUNTERWEIGHTS FROM THE MACHINE (USING SELF REMOVAL DEVICE)

DANGER

Do not enter under the weight or stand between the weight and surrounding object.
Failure to observe this precaution may result in a serious injury or loss of life.

WARNING

Place a signalman to prevent an incident from caught.
Failure to observe this precaution may result in a serious injury or loss of life.

WARNING

Ensure the ground for operation is firm and level and place the steel plate or improve the ground condition as required.
Failure to observe this precaution may result in a serious accident.

WARNING

Place the planking as steel plates if the inclination is 1% or more to the base machine horizontal.
If in the case of 1 % or more inclination, the self removal cylinder and/or its rods may damage due to uneven loads would be received.
Failure to observe this precaution may result in a serious accident, injury or loss of life.

CAUTION

Perform the work with engine speed 1,000 min^{-1} (1,000 rpm) or less.
If exceeded, the cylinder speed becomes faster and excessive force could be applied on the cylinder at start or stop of motion.
This may damage the cylinder rod.
Failure to observe this precaution may lead to damage parts.

Reference Only

1. If the counterweight quantity detect device is equipped.

- Disconnect the detect harnesses installed on all of the counterweights from the base machine harness.
- After disconnection, put the water proof caps on both detect and the base machinery harnesses.

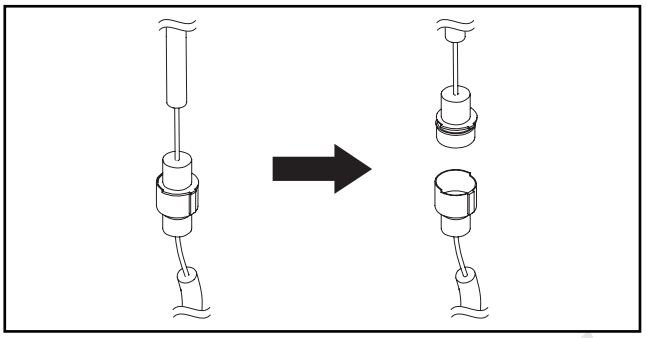

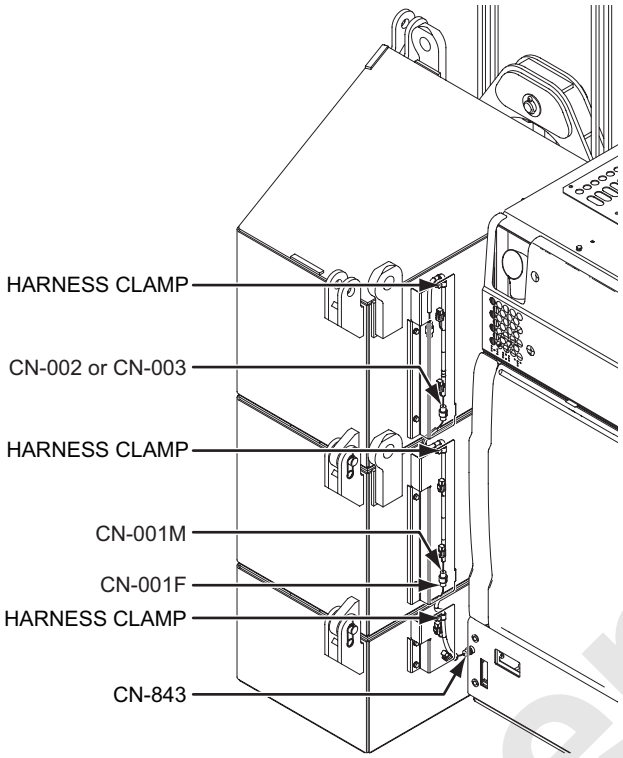

Standard counterweight configuration

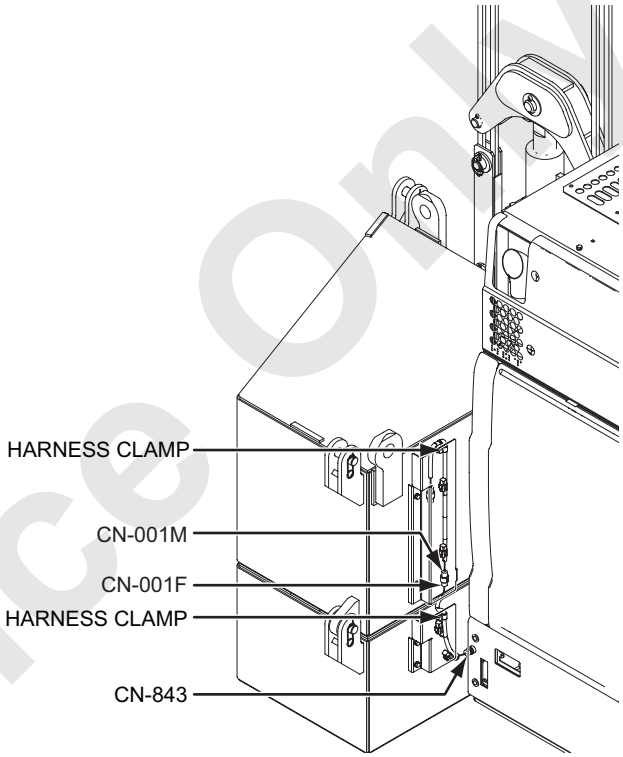

Reduced counterweight configuration

Reference Only

2. Connect the remo-con cable to the connecting portion on the self-removal device.

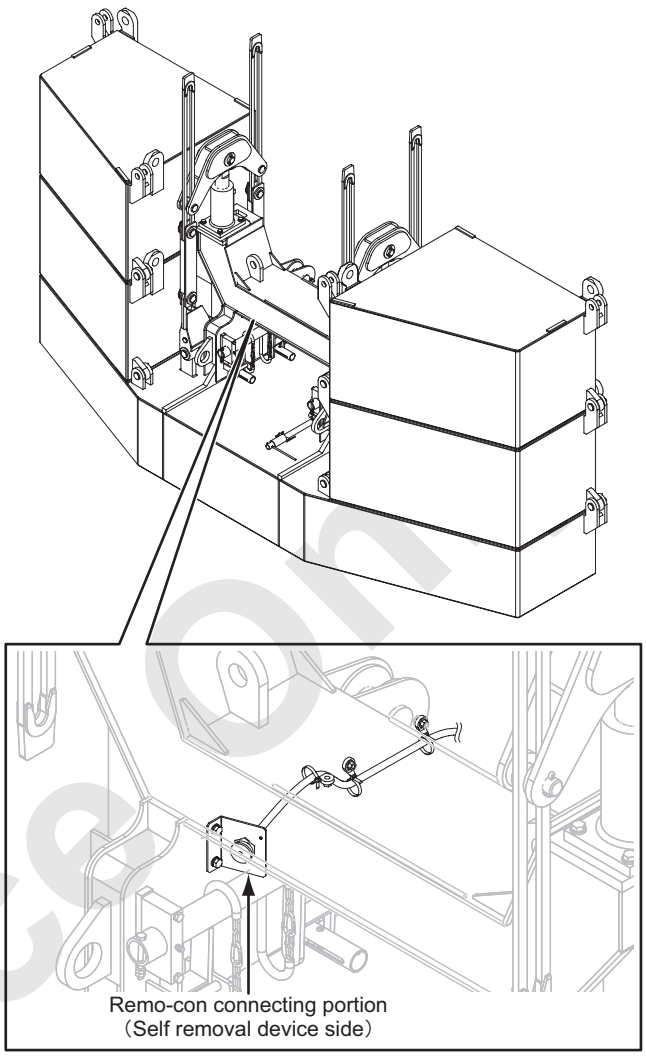

Reference Only

3. Start the engine with the remote control and the speed to approx. 1,000 min^{-1} (1,000 rpm).

4. Control the remote control switch, and fully extend the both right and left cylinders.

CAUTION

While installing and removing the counterweight, ensure the remote control cable not to get caught.

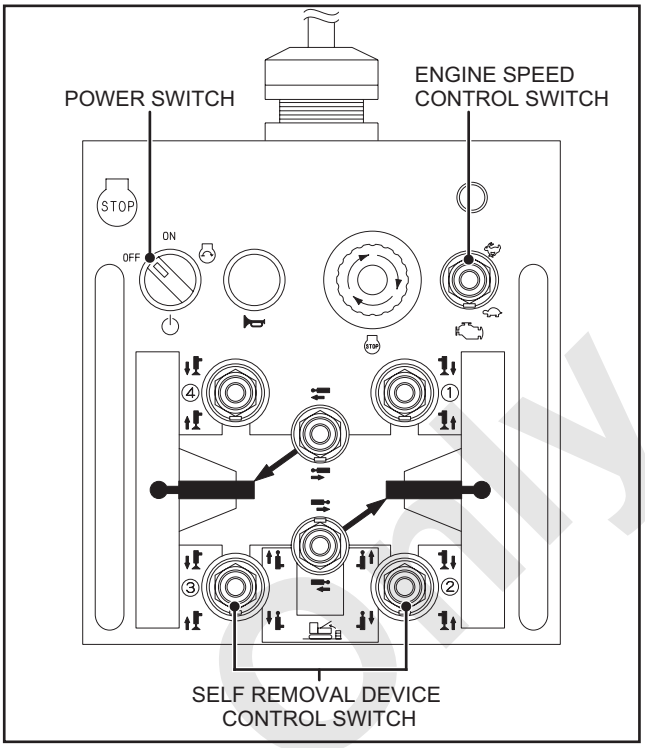

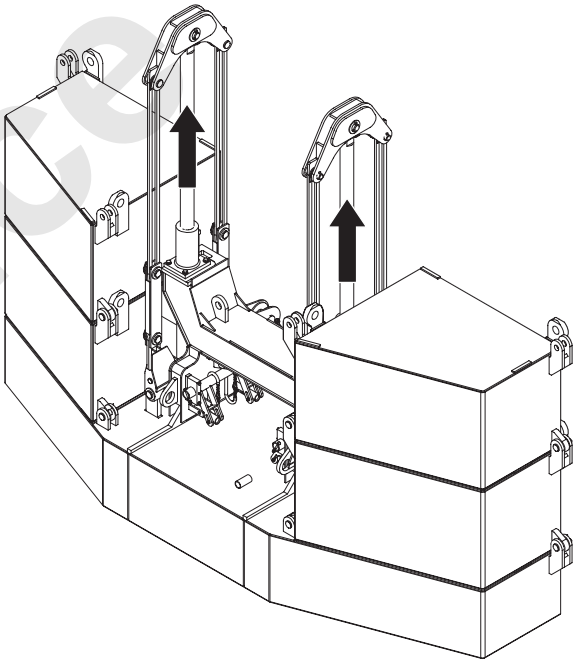

Reference Only

5. Go up onto weight (1) with using the ladder. Pull out the lock pin and spring pin on both sides.

6. Pull out the weight support pin on both sides with using an extension bar.

WARNING

When working at a high elevation, be sure to use a safety belt to prevent falling.
Failure to observe this precaution may result in a serious injury or loss of life.

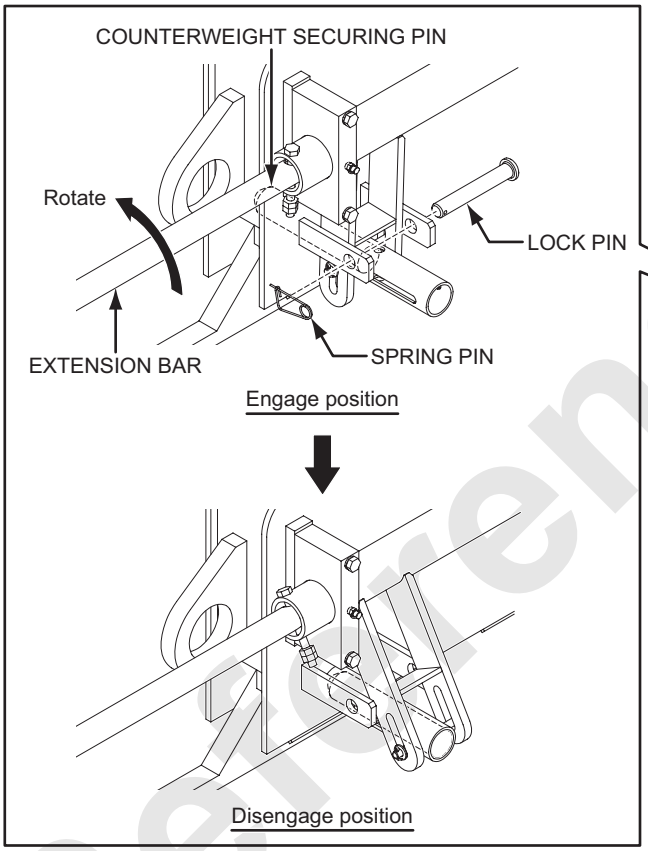

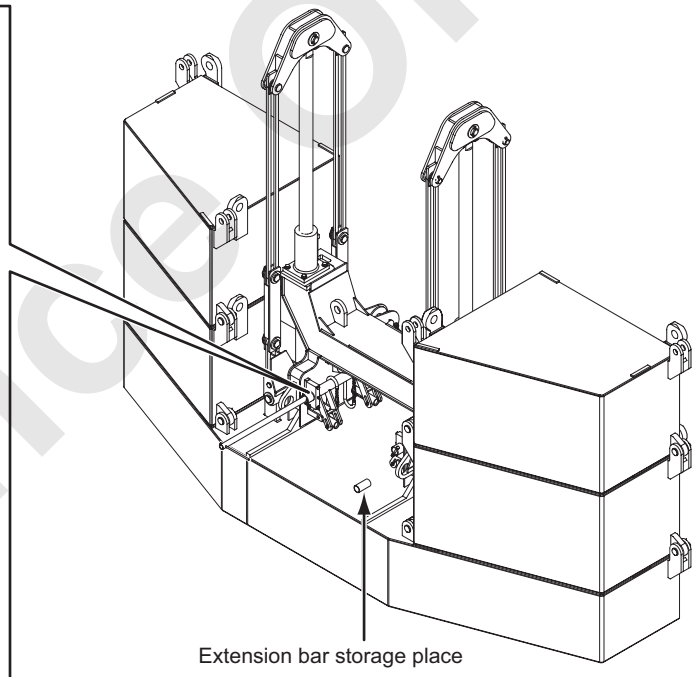

Reference Only

7. Lower the weight on firm and level ground. If needed, place wooded block.

DANGER

Do not enter under the weight or stand between the weight and surrounding object.
Failure to observe this precaution may result in a serious injury or loss of life.

DANGER

When raising or lowering the counterweight, keep the both counterweight cylinders even by operating the both at the same time.
If the counterweight becomes uneven, ALWAYS correct the situation by RISING the "LOWER" side.
If the higher side's cylinder is lowered, the load will be concentrated on that cylinder and may be damaged.
Failure to observe this precaution may lead to damage parts.

WARNING

Slowly control lifting/lowering the counterweight.
Failure to observe this precaution may result in a serious accident.

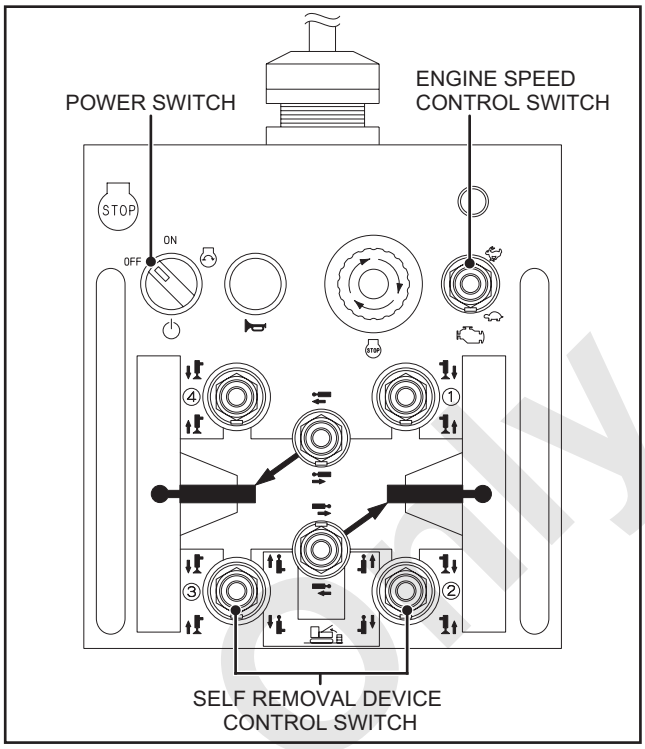

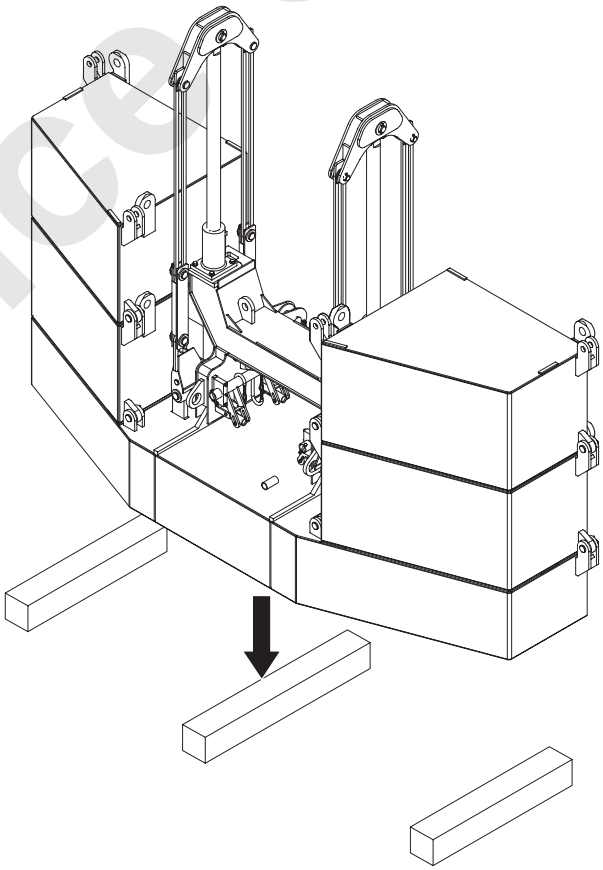

Reference Only

⚠ CAUTION

While installing and removing the counterweight, ensure the remote control cable not to get caught.

⚠ CAUTION

Perform the work with engine speed 1,000 min^{-1} (1,000 rpm) or less.
If exceeded, the cylinder speed becomes faster and excessive force could be applied on the cylinder at start or stop of motion.
This may damage the cylinder rod.
Failure to observe this precaution may lead to damage parts.

⚠ CAUTION

When use of self-removal device for assembling/disassembling of the counterweight, ensure that the remote control cable should not get caught between the frame of self-removal device and the counterweight.

Reference Only

8. As to the front side links, remove securing pin and draw out the connecting pin.
   The link (a) to be turned inside so that not to interfere with the self-removal cylinder and turn the link (b) backward.

9. As to the rear side link, draw out the connecting pin and turn the link (b) backward.

WARNING

Do not insert finger or hand into a pin hole when aligning, inserting or removing pin.
Failure to observe this precaution may result in a serious injury or loss of life.

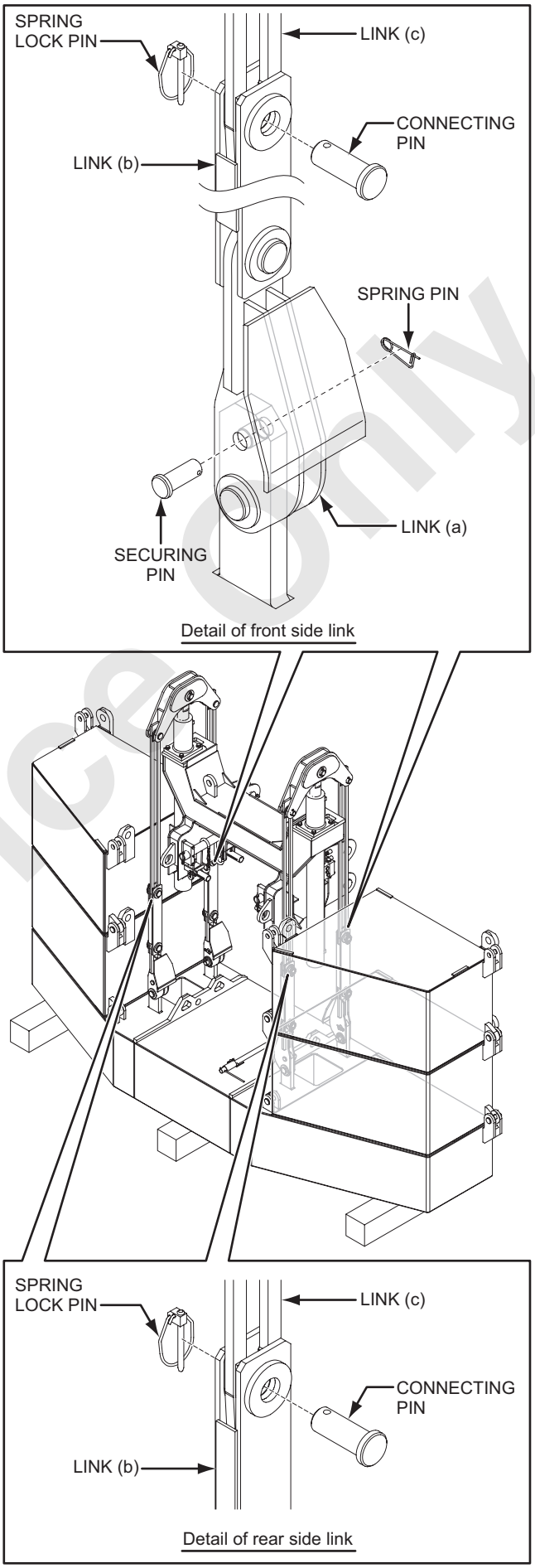

Reference Only

10. Travel straight to keep the base machine away from the counterweights.

DANGER

Do not enter under the weight or stand between the weight and surrounding object.
Failure to observe this precaution may result in a serious injury or loss of life.

WARNING

Assign the signalman at visible place from the operator.

CAUTION

Slowly travel the machine while paying attention to prevent any interference of the base machine with the counterweights.
Failure to observe this precaution may lead to damage parts.

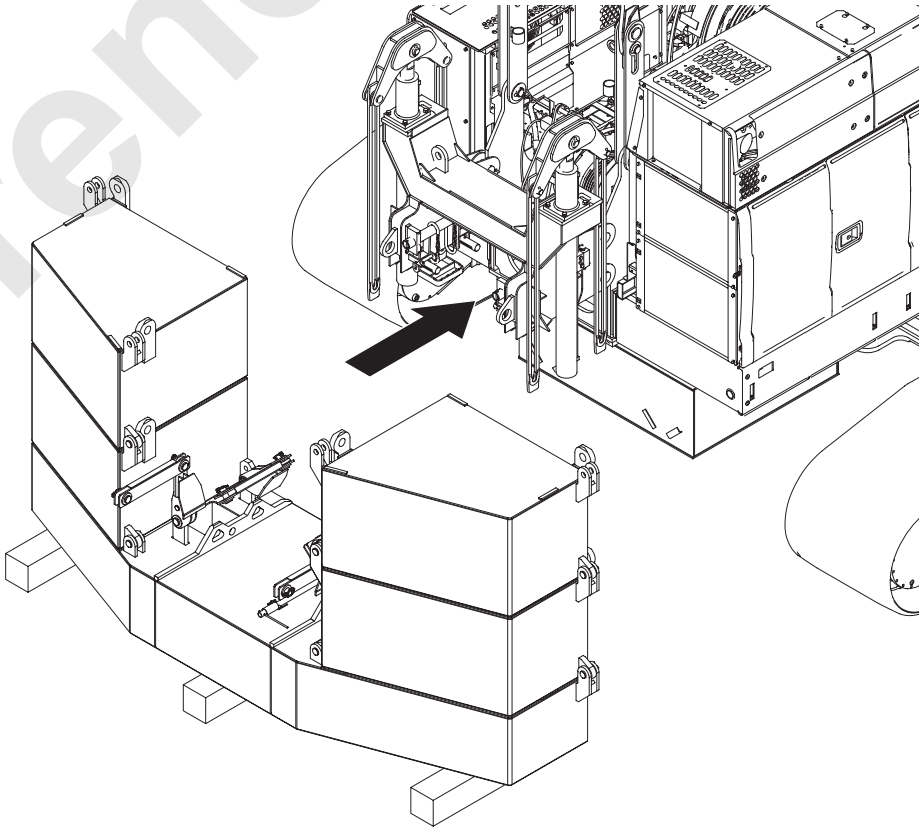

11. Stop the engine with the remote control switch and disconnect the remote control cable connector on self-removal device.

Reference Only

4.4.2 DISASSEMBLY OF THE COUNTERWEIGHT

1. Setting of LMI

   When removing or installing the counterweight, set up the LMI as the following.

Note

Unless the setting of load safety device, the auto-stop function will be works and the machine would not be operated.

(1) Press MENU icon on the main screen to display the menu.

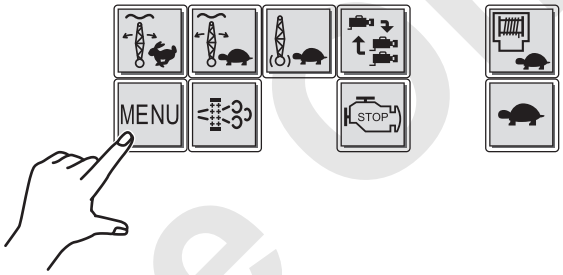

(2) On the selected screen, press icon.

(3) Crane attachment select screen is displayed. Select “10 (Self removal mode)”.

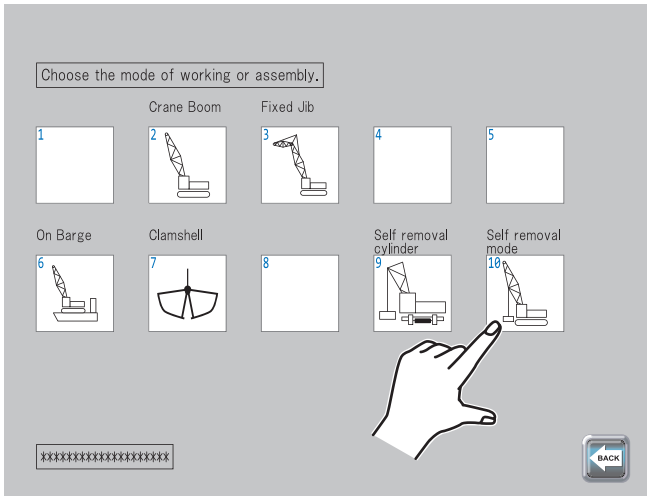

Reference Only

(4) The operation select screen is displayed.
Select “3 (C/W removal mode)”.

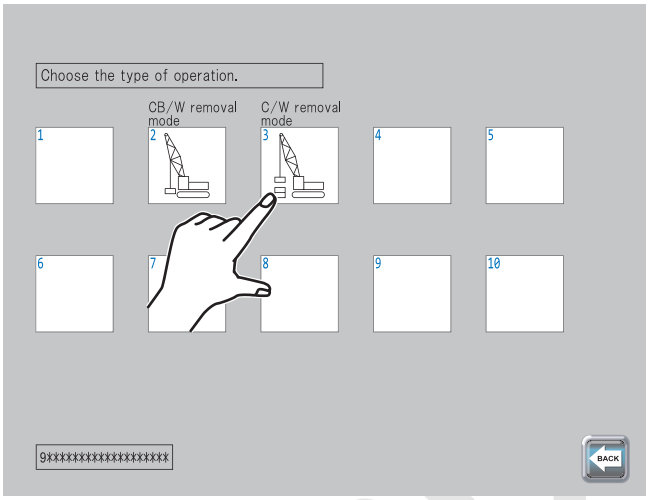

(5) Finally the parts of line input screen is displayed.
Press “0” potion of hook 1.

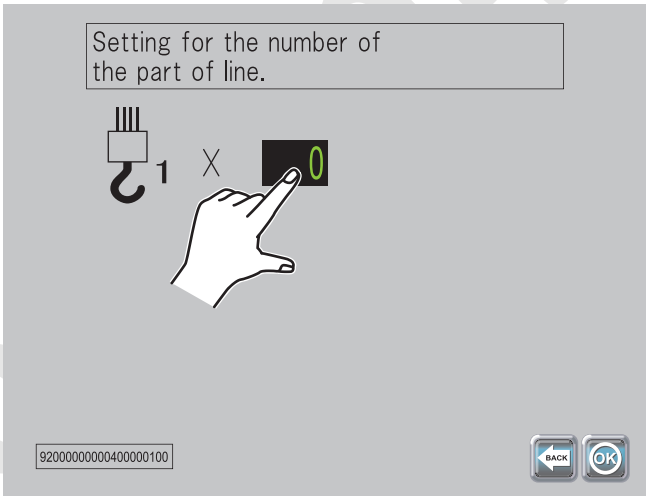

(6) The numeral portion turns highlighting and displayed numerical keypad.
Press “2”.

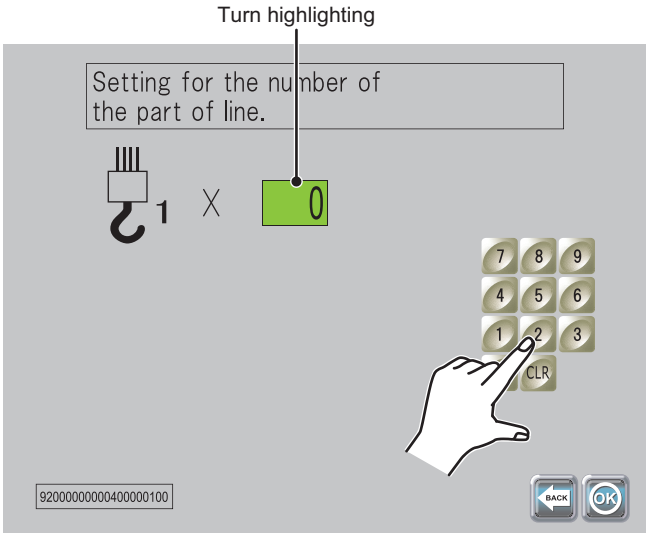

Reference

(7) Press OK.

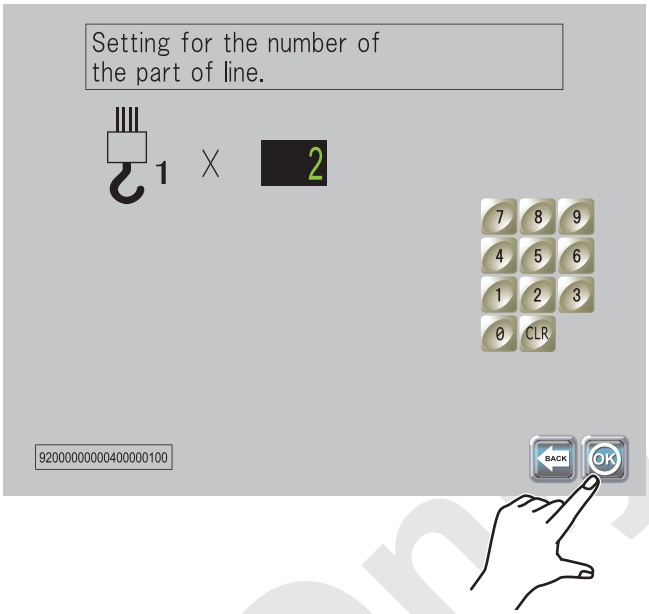

(8) Data is being loaded.

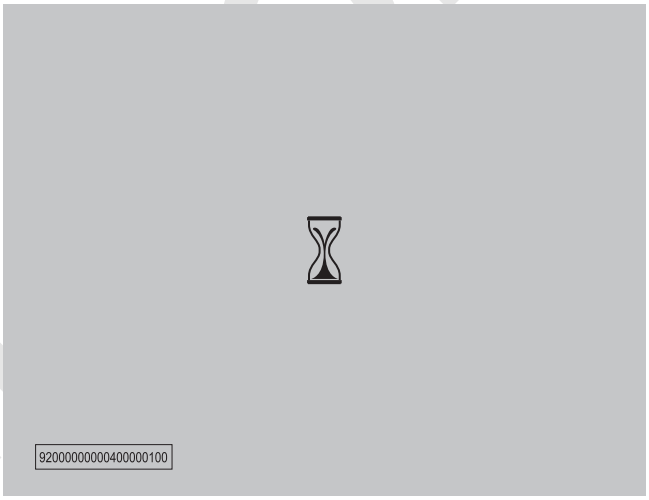

(9) After data is loaded, the result of selection is displayed.
Check if the selected items are correct.

- If correct, press OK.
  The screen returns to the main screen.
- If not correct, press to restart the input.

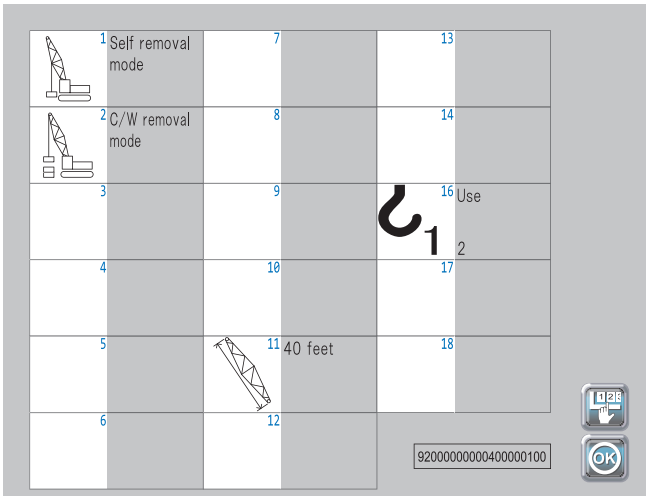

Note

In case the selection is limited to only one choice, select screen is to be neglected and indicates only the result.

Reference only

2. Remove the spring pins and securing pins accordingly (8 locations).

WARNING

Do not insert finger or hand into a pin hole when aligning, inserting or removing pin.
Failure to observe this precaution may result in a serious injury or loss of life.

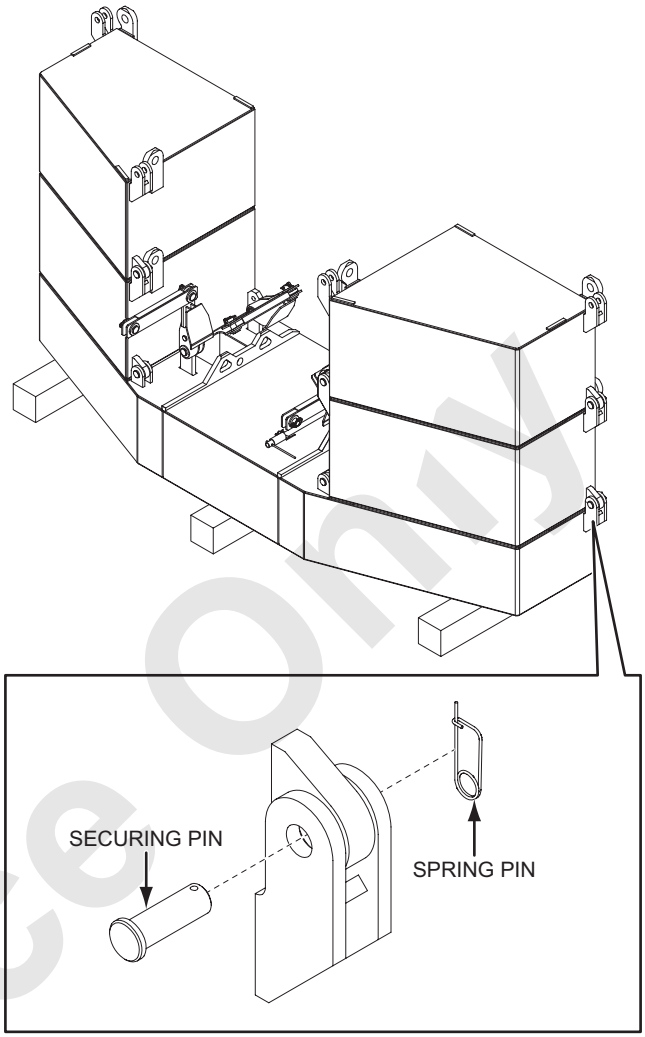

Reference Only

3. Remove the weights (4), (5), (2) and (3) one by one in order.

WARNING

Do not lift more than one weights at a time.
Lifting brackets may break.
Failure to observe this precaution may result in a serious injury or loss of life.

DANGER

Do not enter under the weight or stand between the weight and surrounding object.
Failure to observe this precaution may result in a serious injury or loss of life.

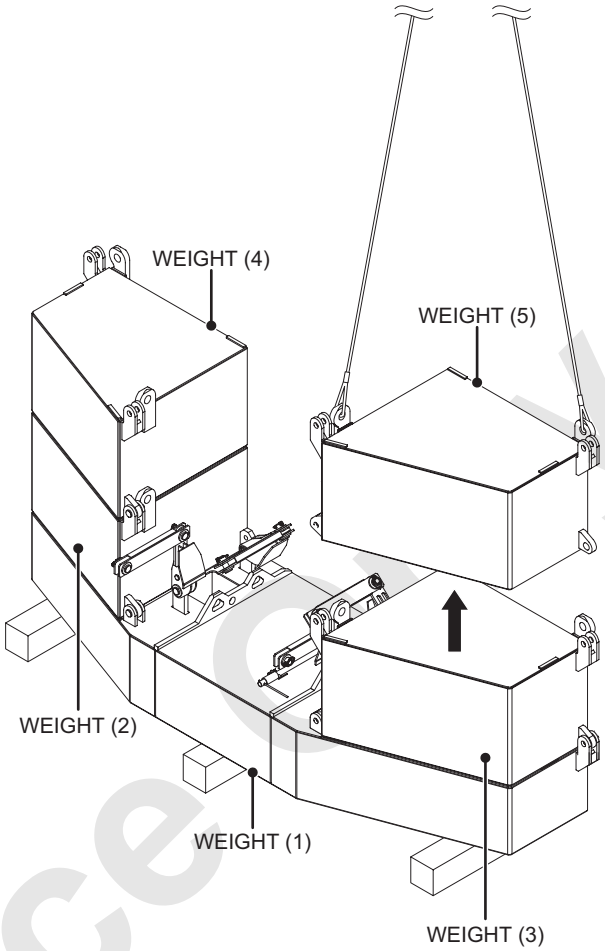

4. Lay down the counterweight side links outside as shown onto the counterweight (1)

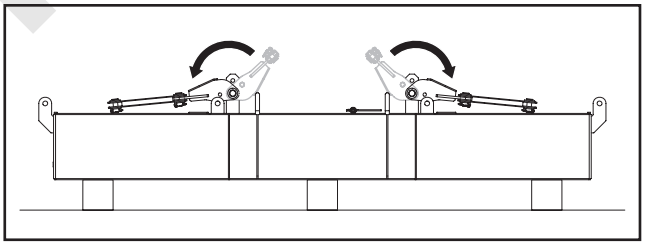

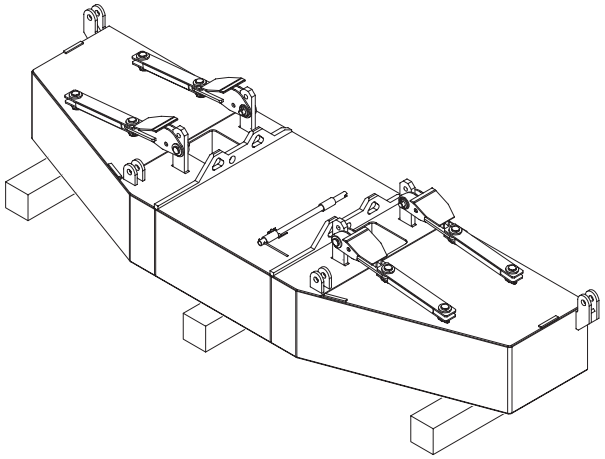

Reference Only

4.4.3 CARBODY WEIGHT REMOVAL (USING SELF REMOVAL DEVICE)

DANGER

Do not enter under the weight or stand between the weight and surrounding object.
Failure to observe this precaution may result in a serious injury or loss of life.

WARNING

Be extremely careful of the ratchet lever hoist handling.
Failure to observe this precaution may result in a serious injury or loss of life.

1. Preparation of carbody weight removal

(1) This machine's carbody weight is composed of two pieces.

EACH WEIGHT MASS

Carbody weight	Weight
Weight (1)	7.2 t (15,873 lbs)
Weight (2)	7.2 t (15,873 lbs)

(2) Before removing the carbody weight, check that the machine is in the following conditions.

- Boom : Basic boom with 35 t hook, 2 part of line.
- Gantry : Work position
- Ground : Firm and level
- Crawlers : Extended

WARNING

As to the stability in swing and traveling to avoid the machine turnover, refer to the article "4.1 SWING AND TRAVEL STABILITY".
Failure to observe this precaution may result in a serious injury or loss of life.

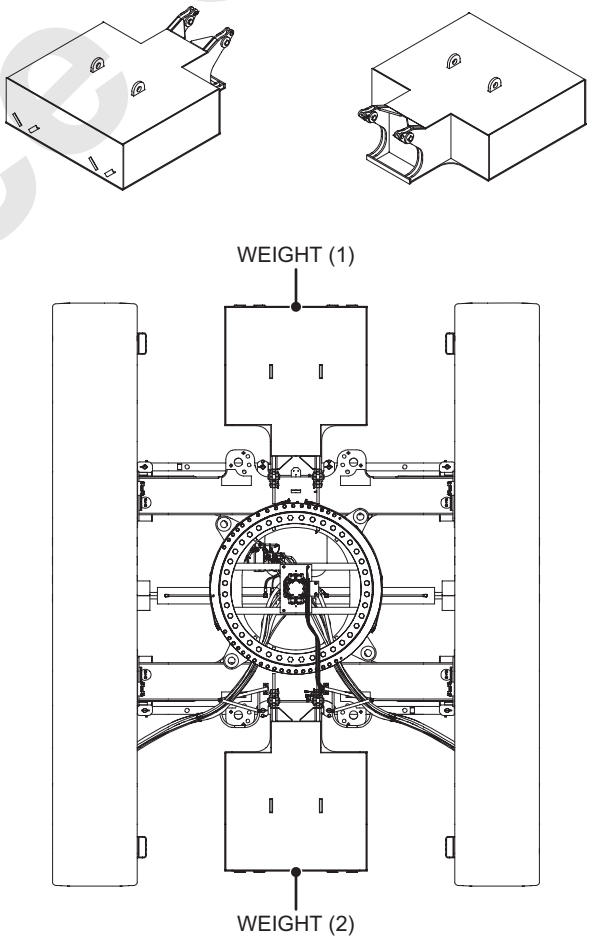

Reference Only

(3) When installing/removing the carbody weight, prepare the tools as listed below.

TOOL

- Attached tool set
- Sling wire rope
  28 mm dia. (1-3/32″ dia.) × 5 m (17′) × 2
- Shackle 5 t (11,025 lbs) × 4
- Ratchet lever hoist 6.3 t (13,890 lbs) × 2

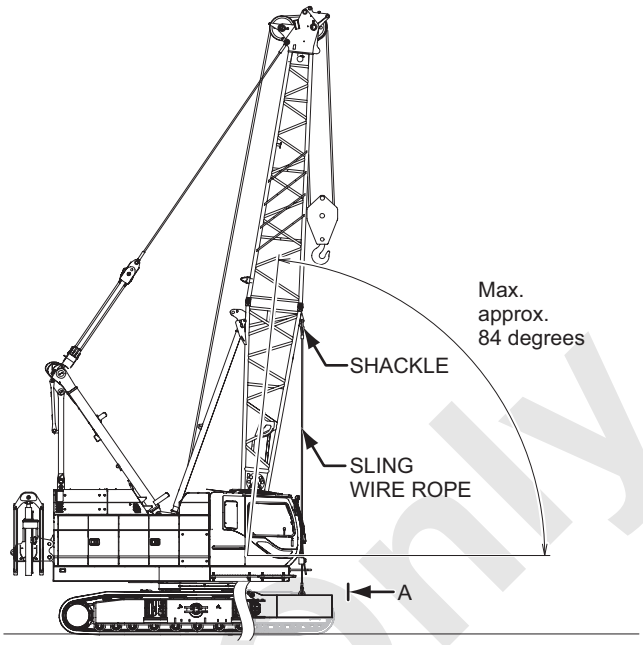

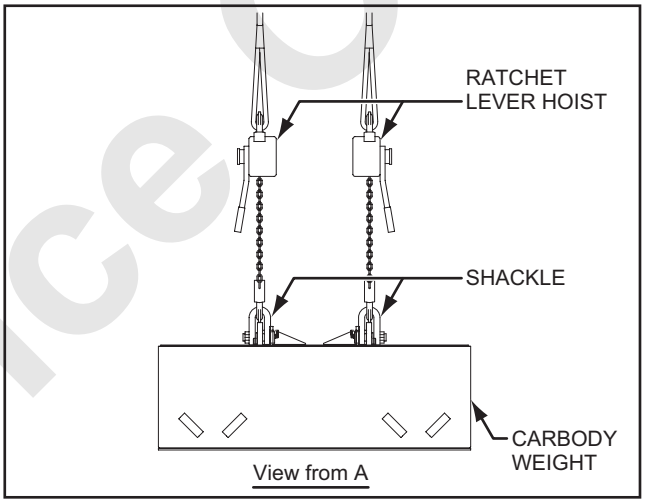

Reference Only

2. Setting of LMI

When removing or installing the carbody weight, set up the LMI as the following.

Note

Unless the setting of load safety device, the auto-stop function will be works and the machine would not be operated.

(1) Press MENU icon on the main screen to display the menu.

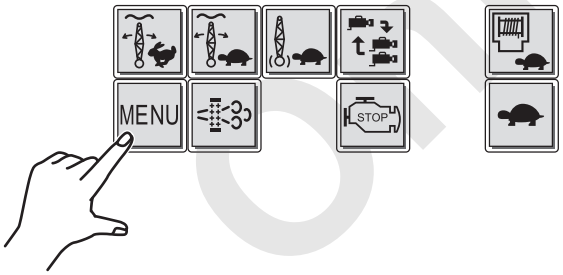

(2) On the selected screen, press icon.

(3) Crane attachment select screen is displayed. Select “10 (Self removal mode)”.

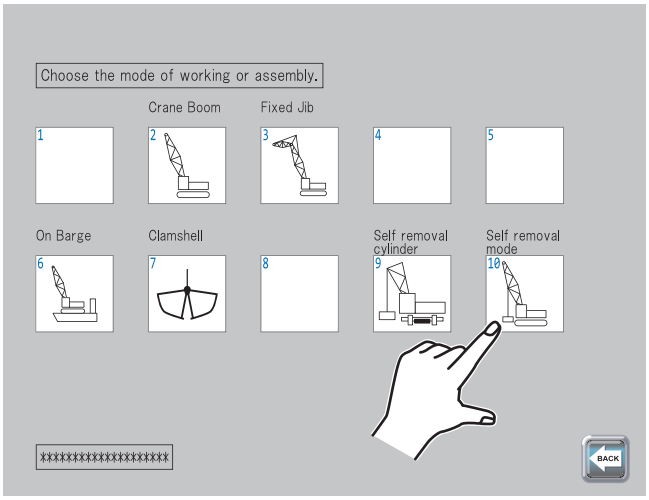

Reference Only

(4) The operation select screen is displayed.
Select “2 (CB/W removal mode)”.

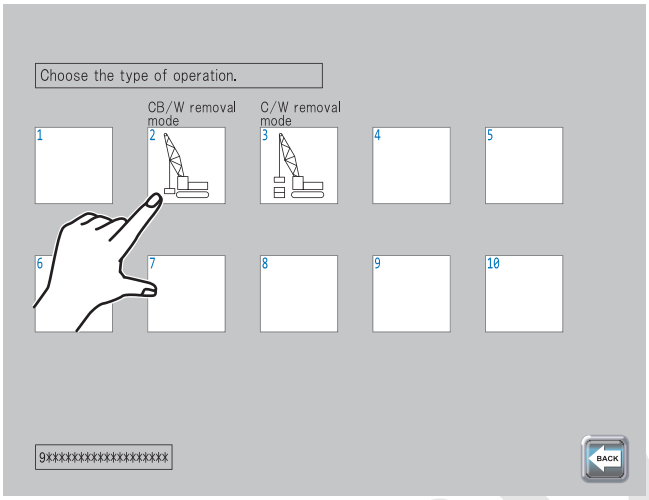

(5) Finally the parts of line input screen is displayed.
Press “0” potion of hook 1.

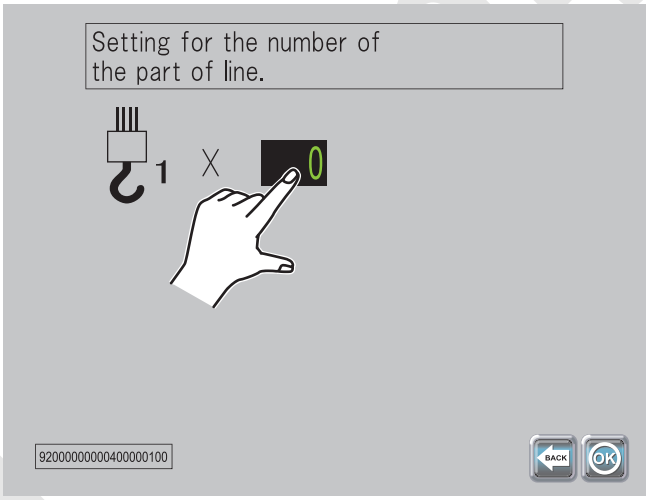

(6) The numeral portion turns highlighting and displayed numerical keypad.
Press “2”.

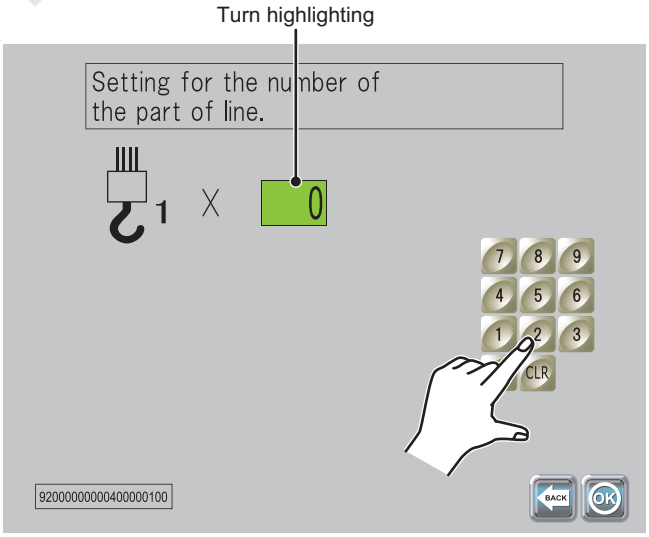

Reference

(7) Press OK.

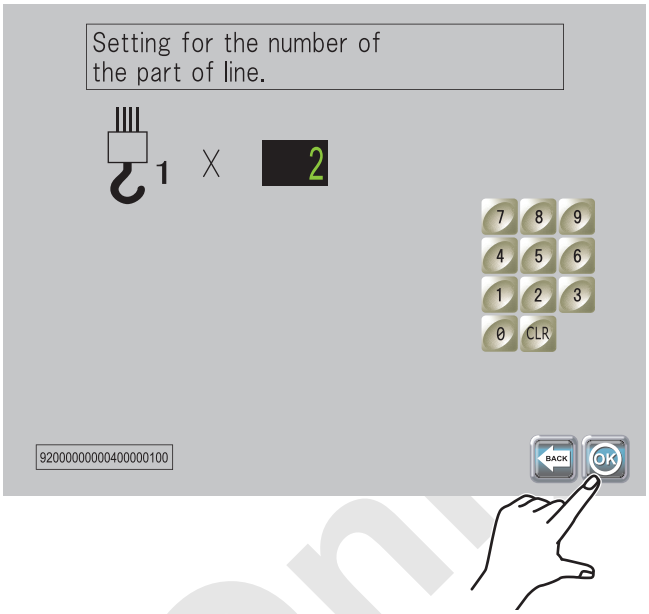

(8) Data is being loaded.

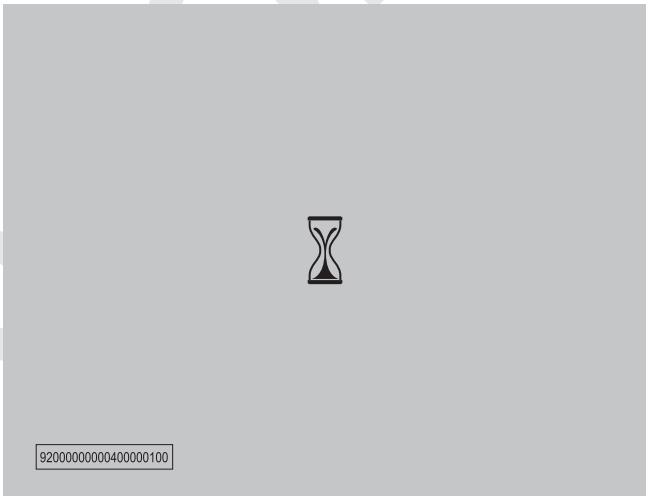

(9) After data is loaded, the result of selection is displayed.
Check if the selected items are correct.

- If correct, press OK.
  The screen returns to the main screen.
- If not correct, press to restart the input.

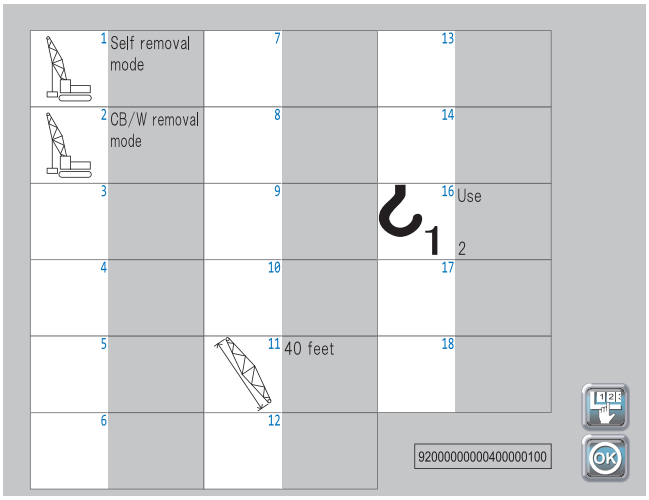

Note

In case the selection is limited to only one choice, select screen is to be neglected and indicates only the result.

Reference only

3. Swing the upper machinery for approx. 4.5 degrees.

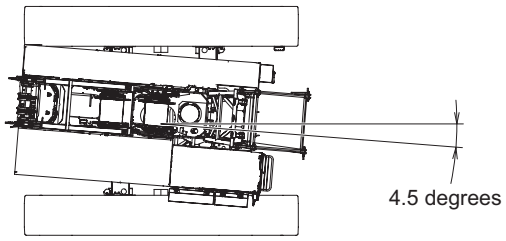

4. Install the shackles to the carbody weight and connect the sling from ratchet lever hoist.

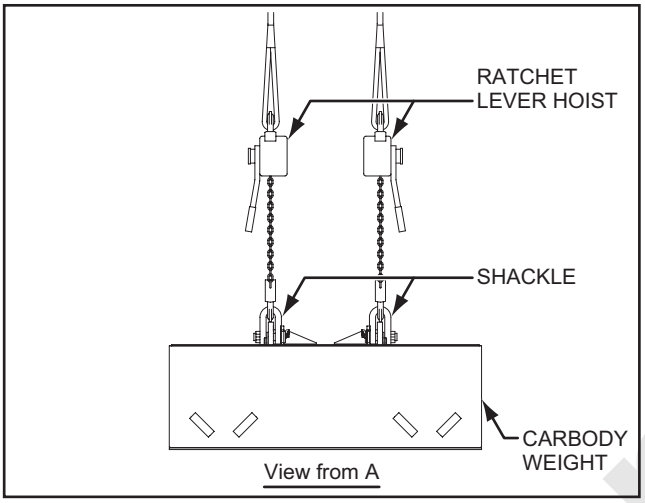

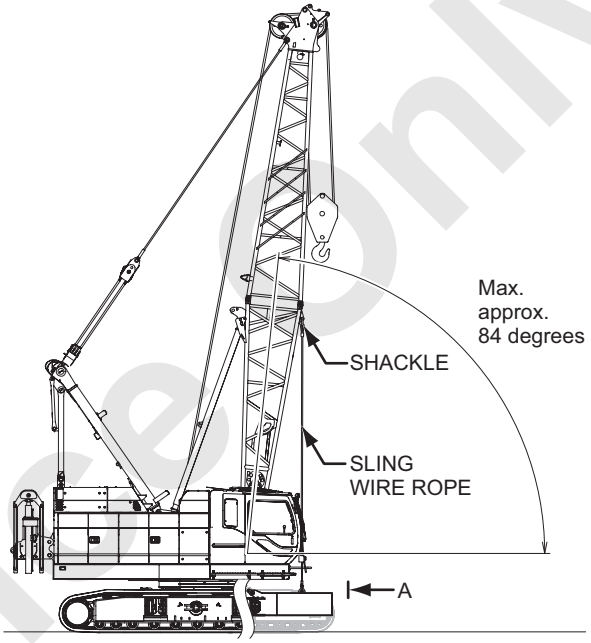

Reference Only

5. For the model equipped with weight detect harness (CN-914F) at the front side of the main machinery, disconnect the harness and apply the waterproof caps on both weight and the main machinery sides.

Note

In case the carbody weight is not equipped as reduced weight specification, leave the base machine harness with cap as is.

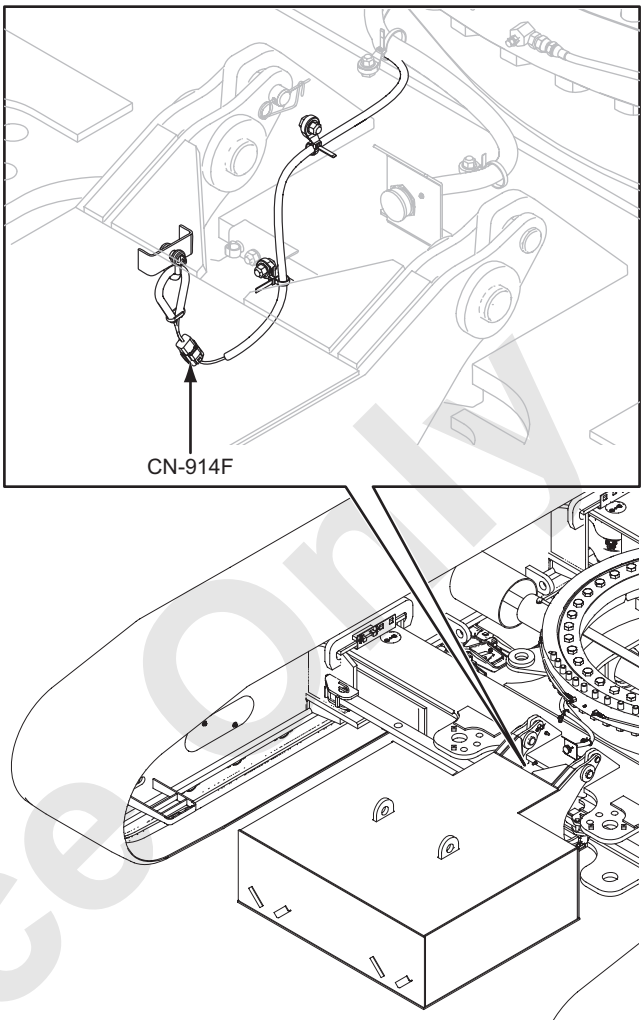

Reference Only

6. Remove the carbody weight securing pins.

WARNING

Do not insert finger or hand into a pin hole when aligning, inserting or removing pin.
Failure to observe this precaution may result in a serious injury or loss of life.

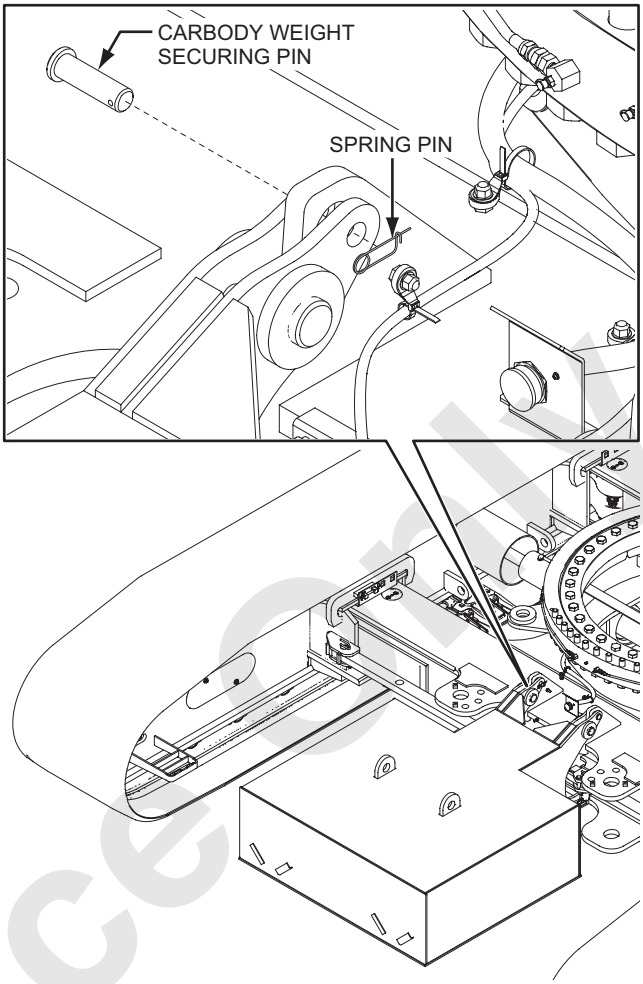

Reference Only

7. Lift up the ratchet lever hoist to leave the (a) portion of the carbody weight from the carbody hanging bracket.

DANGER

Do not enter under the weight or stand between the weight and surrounding object.
Failure to observe this precaution may result in a serious injury or loss of life.

WARNING

Be extremely careful of the ratchet lever hoist handling.
Failure to observe this precaution may result in a serious injury or loss of life.

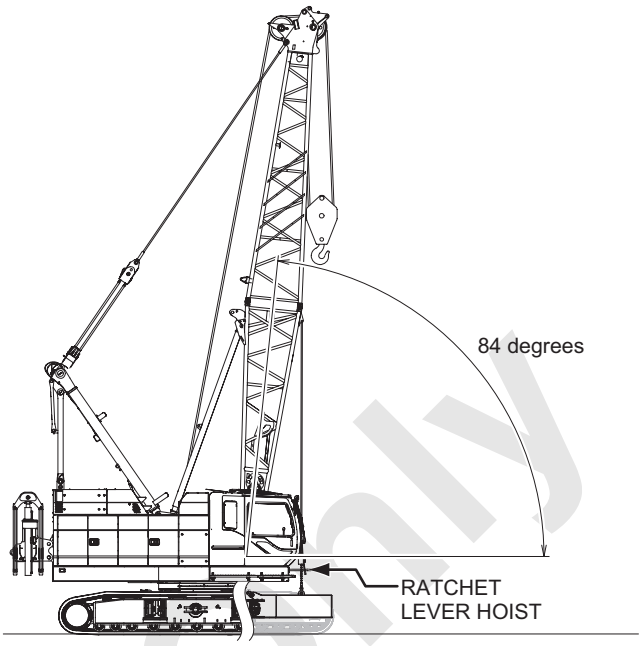

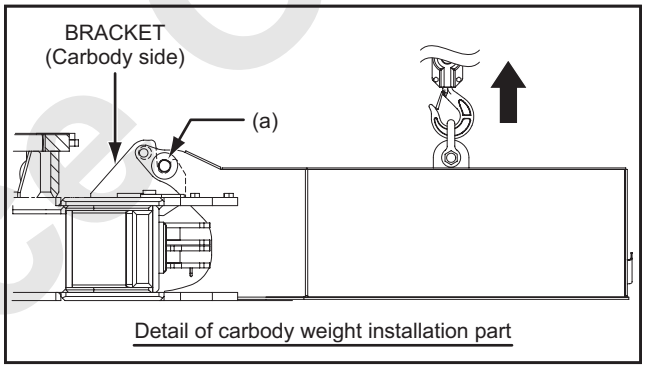

Detail of carbody weight installation part

8. Lower the boom slightly and move the carbody weight away from the base machine.

9. Lower the boom further and place the weight to the ground and disconnect the slings.

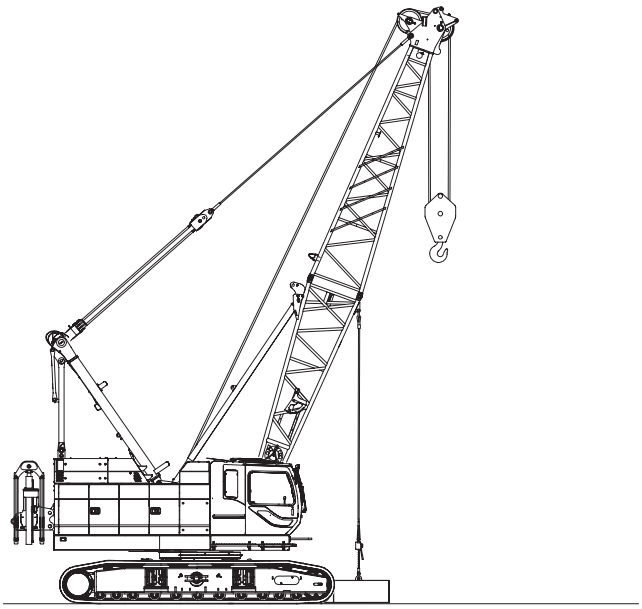

10. Remove the carbody weight (2) as same manner as carbody weight (1).

Reference Only

11. Place the boom tip on the ground.

(1) Lower the boom until auto-stop occurs.
When the boom automatically stops, indicate warning code [ME007] on the monitor display.

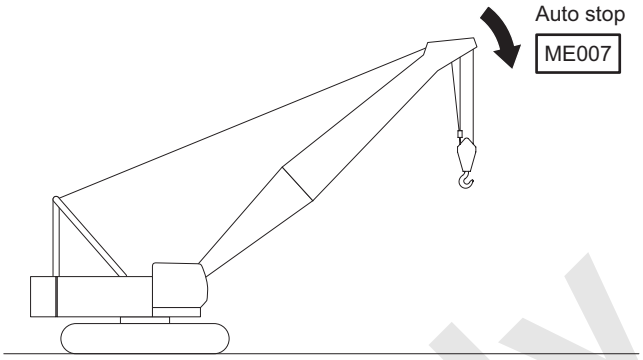

(2) When the crane auto-stops, press (Boom, jib lowering icon) in the monitor for more than 1 second.
The crane is turned to boom lowering mode and auto-stop is released and boom lowering becomes possible.

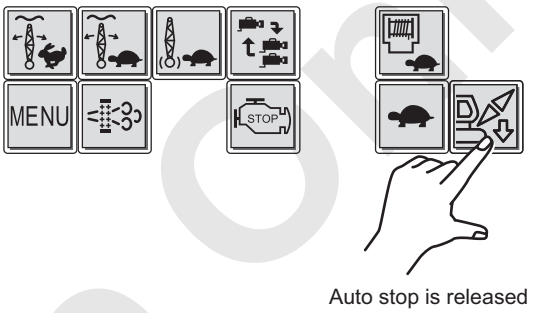

Note

Press (assy/disassy icon), (boom, jib lowering icon) for more than 1 second.

(3) However when the weight of hook overhoist limit switch contacts the ground, auto-stop occurs due to hook overhoist preventive device.
When the boom automatically stops, indicate warning code [ME017] on the monitor display.

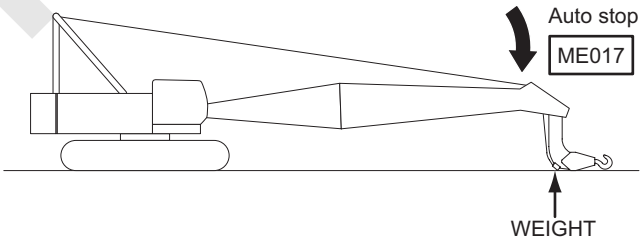

(4) To lower the boom further, return the control lever to neutral once and press (assy/disassy icon) for one time (1 second).
Then the crane turns to assy/disassy mode and auto-stop due to hook overhoist is released and boom lowering becomes possible.

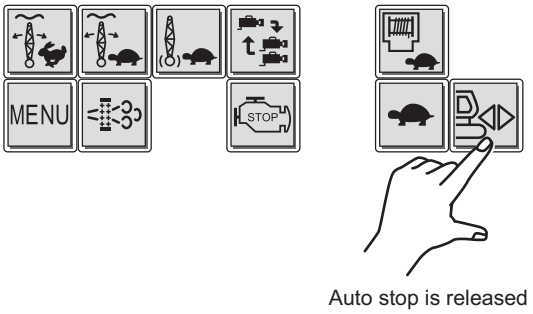

Note

Press (assy/disassy icon), (boom, jib lowering icon) for more than 1 second.

Reference Only

12. Remove the slings and ratchet lever hoist from the boom base.

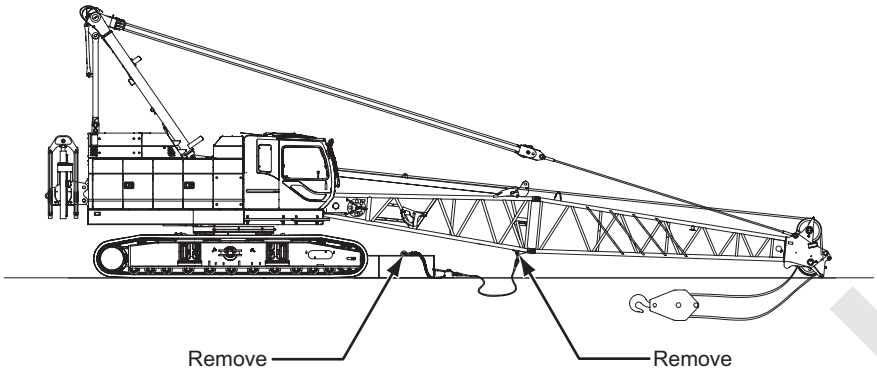

13. Setting of LMI

(1) Press MENU icon on the main screen to display the menu.

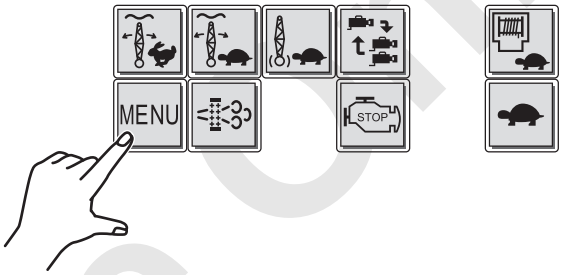

(2) On the selected screen, press icon.

(3) Crane attachment select screen is displayed. Select “10 (Self removal mode)”.

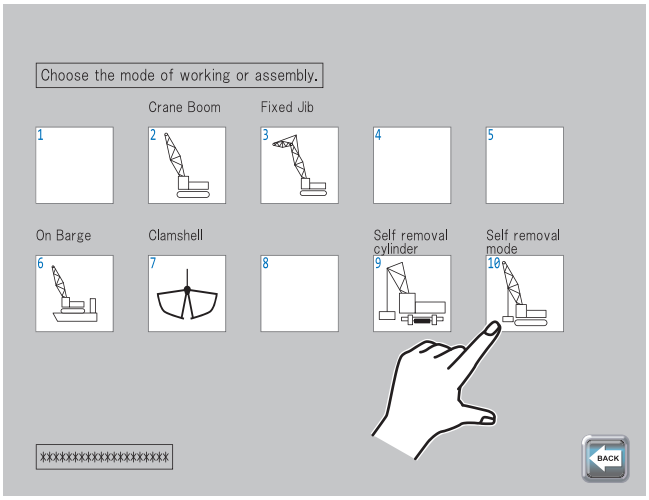

Reference Only

(4) The operation select screen is displayed.
Select “3 (C/W removal mode)”.

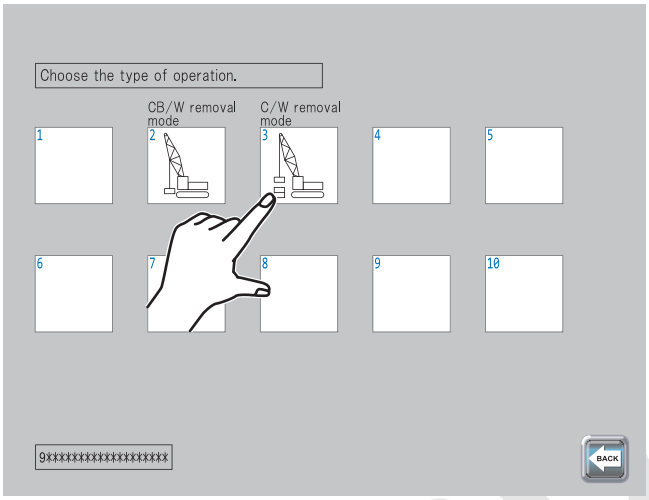

(5) Finally the parts of line input screen is displayed.
Press “0” potion of hook 1.

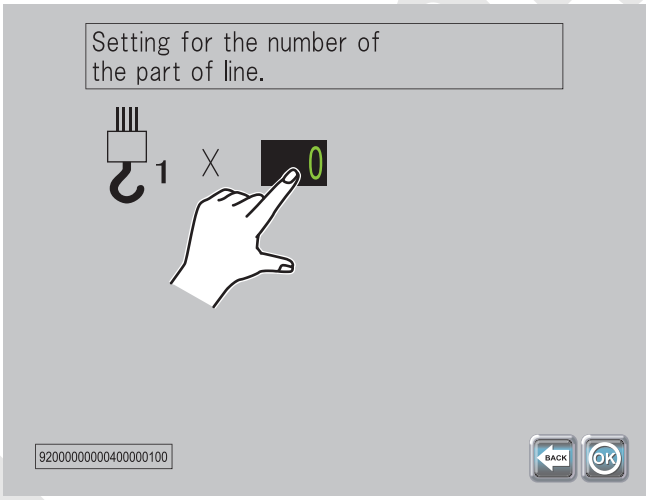

(6) The numeral portion turns highlighting and displayed numerical keypad.
Press “2”.

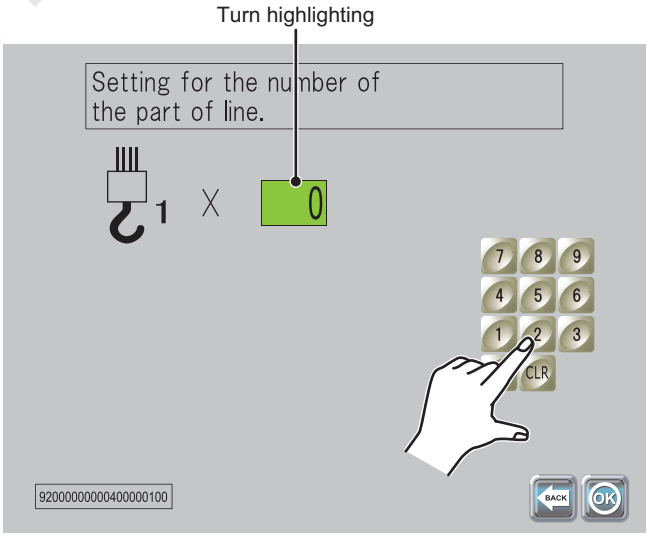

Reference

(7) Press OK.

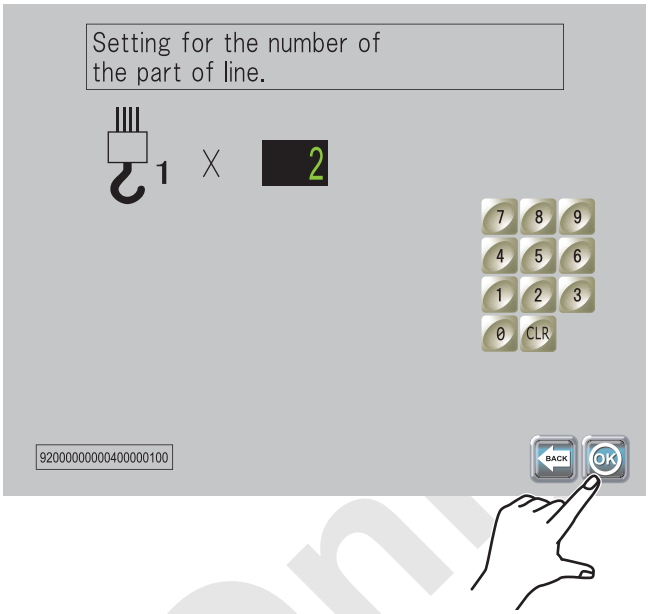

(8) Data is being loaded.

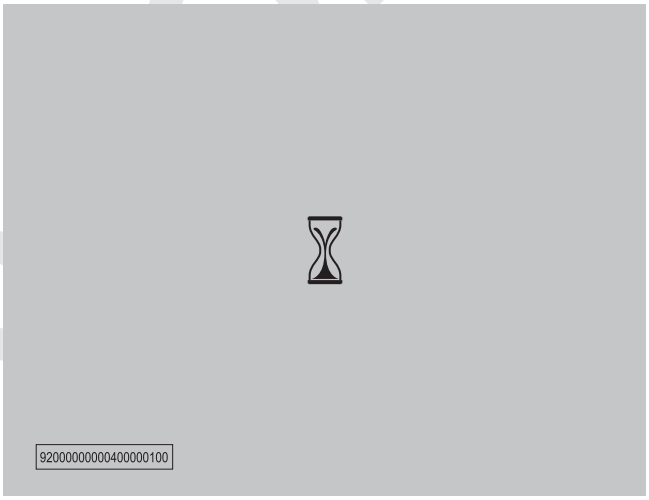

(9) After data is loaded, the result of selection is displayed.
Check if the selected items are correct.

- If correct, press OK.
  The screen returns to the main screen.
- If not correct, press to restart the input.

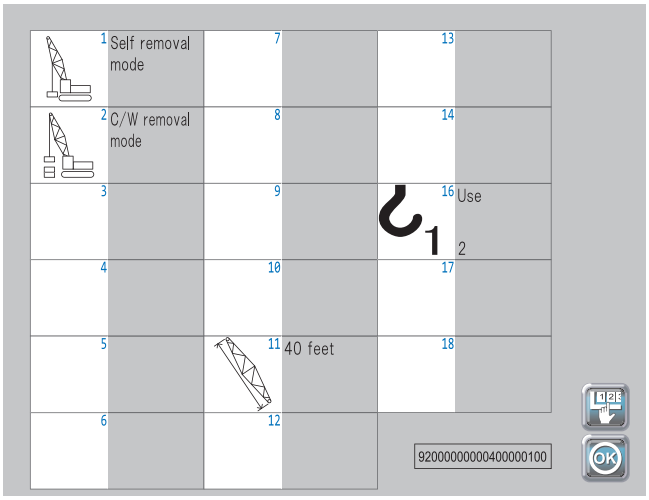

Note

In case the selection is limited to only one choice, select screen is to be neglected and indicates only the result.

Reference only

14. Place the carbody weights on the track.

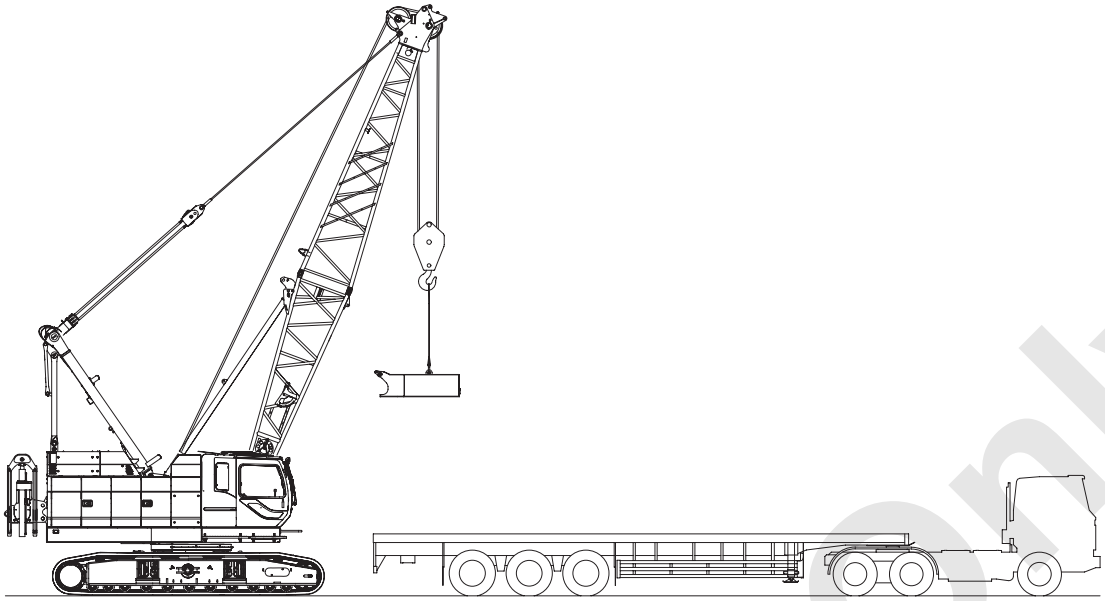

Reference Only

4.4.4 WINDING UP THE FRONT DRUM WIRE ROPE

CAUTION

Confirm that the hook is placed in the stable condition.

1. Remove the rope socket and clamp from the wire rope end.

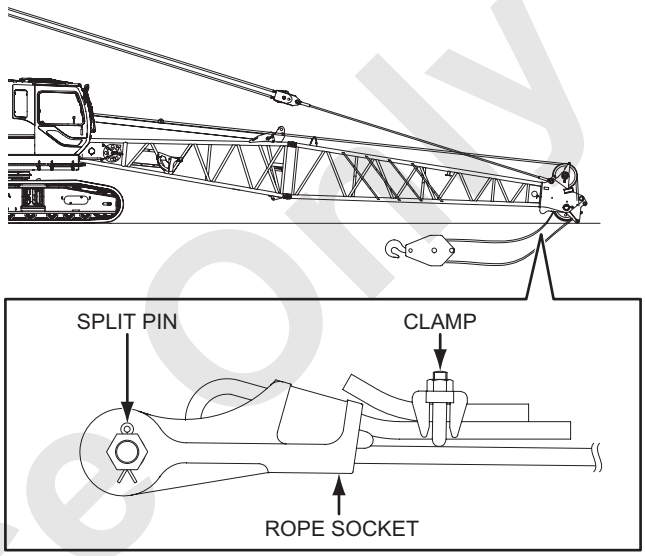

2. Remove the hook overhoist limit switch and weight from the left side bracket on the tip end of the boom..

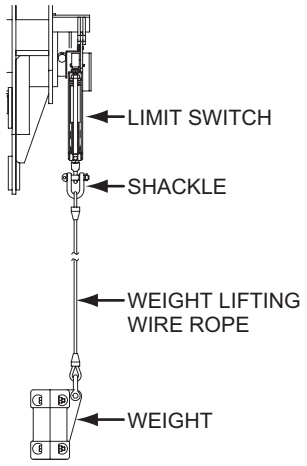

Reference Only

3. Slowly operate the front drum control lever to wild up the hoist wire rope onto the corresponding drum and be careful not to tangle the hoist wore rope with sheave (s).

WARNING

- **When handling the wire rope, use leather gloves to prevent injury on the fingers or hands.**
  Failure to observe this precaution may result in a serious injury.
- **Take extra care to work on the moving wire rope not to touch the sheave and wire rope to prevent accident of being crushed or being entangled.**
  Failure to observe this precaution may result in a serious injury or loss of life.
- **Keep away from rope end when removing the wire rope if may suddenly jump and cause injury.**
  Failure to observe this precaution may result in a serious injury or loss of life.

4. Fix the wire rope end to the drum outer layer with a steel wire after winding up.

Reference Only

4.4.5 REMOVING THE BOOM GUY LINE

1. Set the spreader guide to the work position, and slowly loosen the boom hoist wire rope.

2. Refer to the article “5.1.3 HANDLING OF SPREADER GUIDE” for how to use spreader guide.

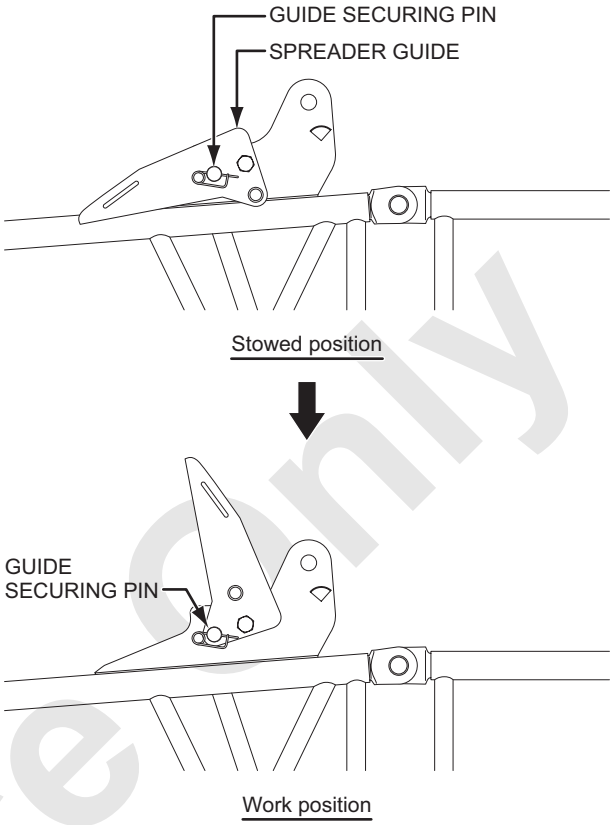

WARNING

Place a signalman to prevent accident from rotating drum.
Failure to observe this precaution may result in a serious injury.

3. Use the spreader guide, and install the upper spreader on the boom base with the spreader securing pin.

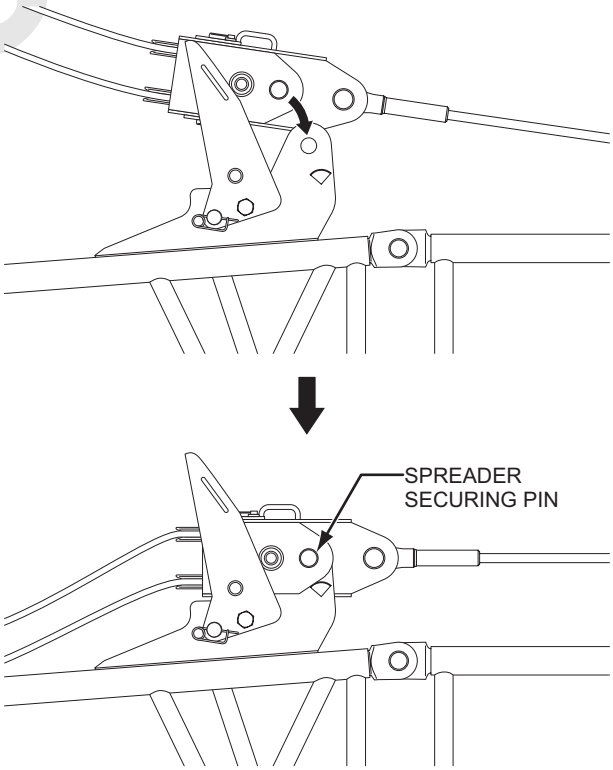

WARNING

Be sure to support the spreader guide with hands, when removing the pin and handling the guide.
Failure to observe this precaution may result in a serious injury or loss of life.

Note

If in case of difficulty to stow the spreader due to incline of it, wind boom hoist wire rope a bit to leave the spreader from the guide and attempt to stow it again.
Move the spreader up and down by mean of shaking the boom hoist wire rope to obtain alignment easier between spreader and lower boom securing holes.

Reference Only

4. Disconnect the guy lines from the upper spreader. Put the connecting pins back to the upper spreader.

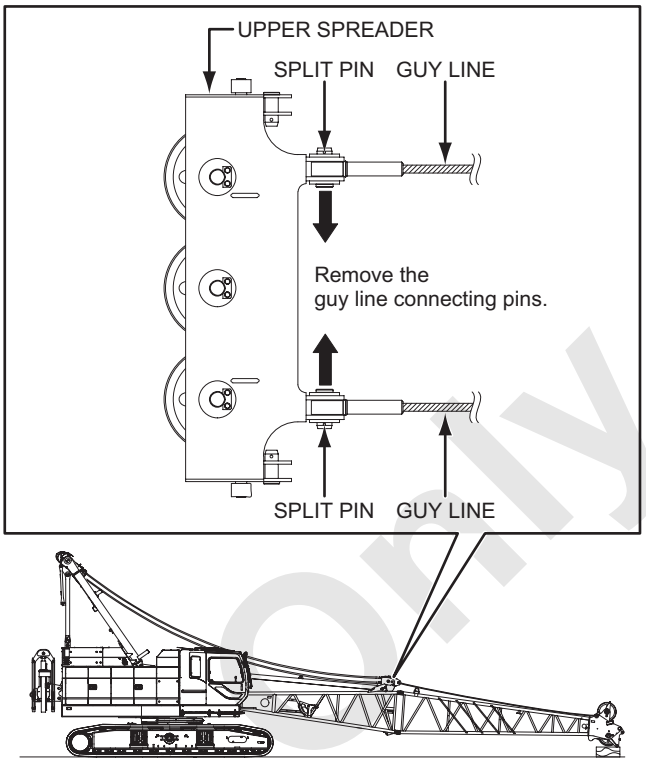

Reference Only

4.4.6 DISASSEMBLING THE BOOM TIP

1. Operate the boom hoist control lever to tighten the boom hoist wire rope to remove load from the bottom connector section.

2. Draw out the connecting pin (double tapered) from outside of the bottom connecting part.

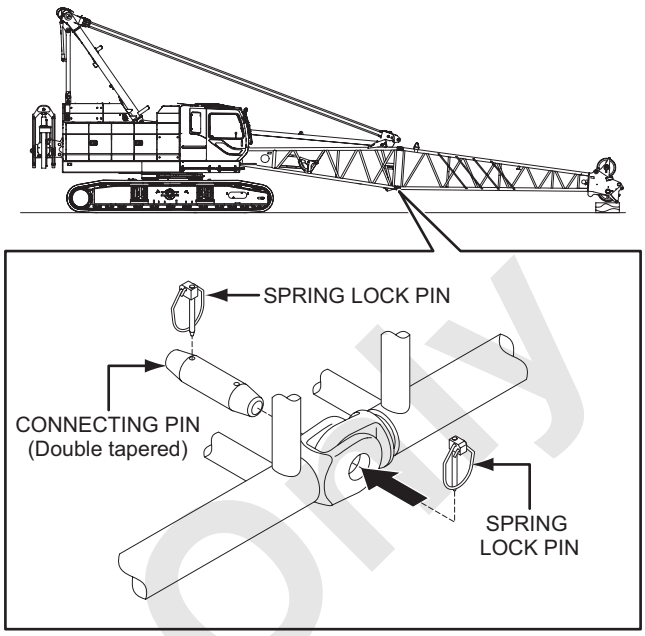

DANGER

Do not stand on, or enter under/inside of the attachment being assembling/disassembling.
Failure to observe this precautions may result in a serious injury or loss of life.

WARNING

Do not stand in line with the connecting pins (double tapered) being inserted/removed.
The pin may fly out from the pinhole.
Failure to observe this precaution may result in a serious injury or loss of life.

WARNING

Do not insert finger or hand into a pin hole when aligning, inserting or removing pin.
Failure to observe this precaution may result in a serious injury or loss of life.

Reference Only

3. Hold the boom tip with the assist crane.
   Place a wooden block under the boom base tip section and lower the boom base.
   Then draw out the top connecting pins (with flange).

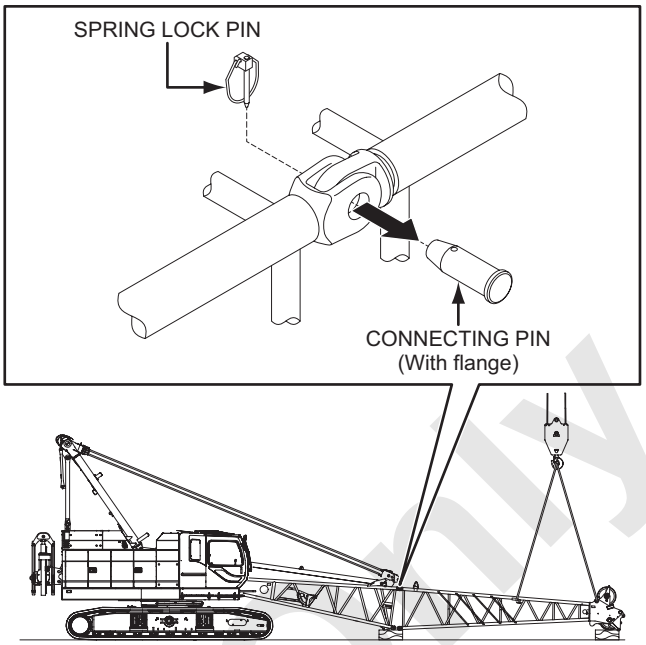

DANGER

Do not stand on, or enter under/inside of the attachment being assembling/disassembling.
Failure to observe this precautions may result in a serious injury or loss of life.

WARNING

Do not stand in line with the connecting pins (double tapered) being inserted/removed.
The pin may fly out from the pinhole.
Failure to observe this precaution may result in a serious injury or loss of life.

WARNING

Do not insert finger or hand into a pin hole when aligning, inserting or removing pin.
Failure to observe this precaution may result in a serious injury or loss of life.

Reference Only

4.4.7 LOWERING THE GANTRY

DANGER

Do not stand on, or enter under/inside of the attachment being assembling/disassembling.
Failure to observe this precautions may result in a serious injury or loss of life.

DANGER

Do not enter under or inside of the gantry (or mast).
Failure to observe this precaution may result in a serious injury or loss of life.

WARNING

- **When handling the wire rope, use leather gloves to prevent injury on the fingers or hands.**
  Failure to observe this precaution may result in a serious injury.
- **Take extra care to work on the moving wire rope not to touch the sheave and wire rope to prevent accident of being crushed or being entangled.**
  Failure to observe this precaution may result in a serious injury or loss of life.

CAUTION

Ensure to perform the gantry raising/lowering work with the boom placed on the wood blocking of approx. 100 mm (3-15/16 in.) in height.
Take extra care on slack or tension of the boom.
Failure to observe this precaution may lead to damage the parts.

Reference Only

1. Start the engine and set the speed to LOW (800 min^{-1} [800 rpm]).

2. Turn the boom drum control lever to lowering side and pay out the boom hoist wire rope slowly until the ropes are placed on the boom base and the gantry.
   At this time take extra care not to cause entangling of wire rope or derailing from the sheave.

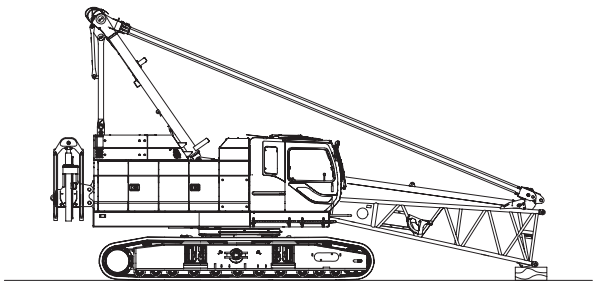

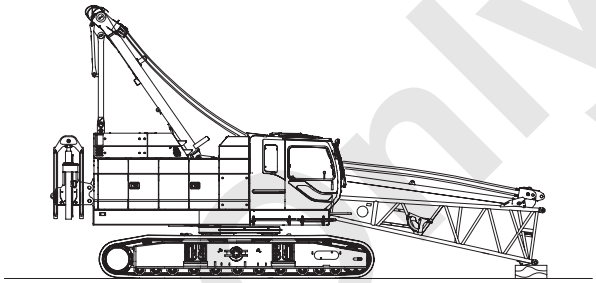

Reference Only

3. Pull out the travel kit securing pin from the travel kit and remove the travel kit from the stopper.

4. Take out the spring lock pin and pull out the gantry securing pin from the gantry both right and left sides and store them to the holders.

WARNING

Do not insert finger or hand into a pin hole when aligning, inserting or removing pin.
Failure to observe this precaution may result in a serious injury or loss of life.

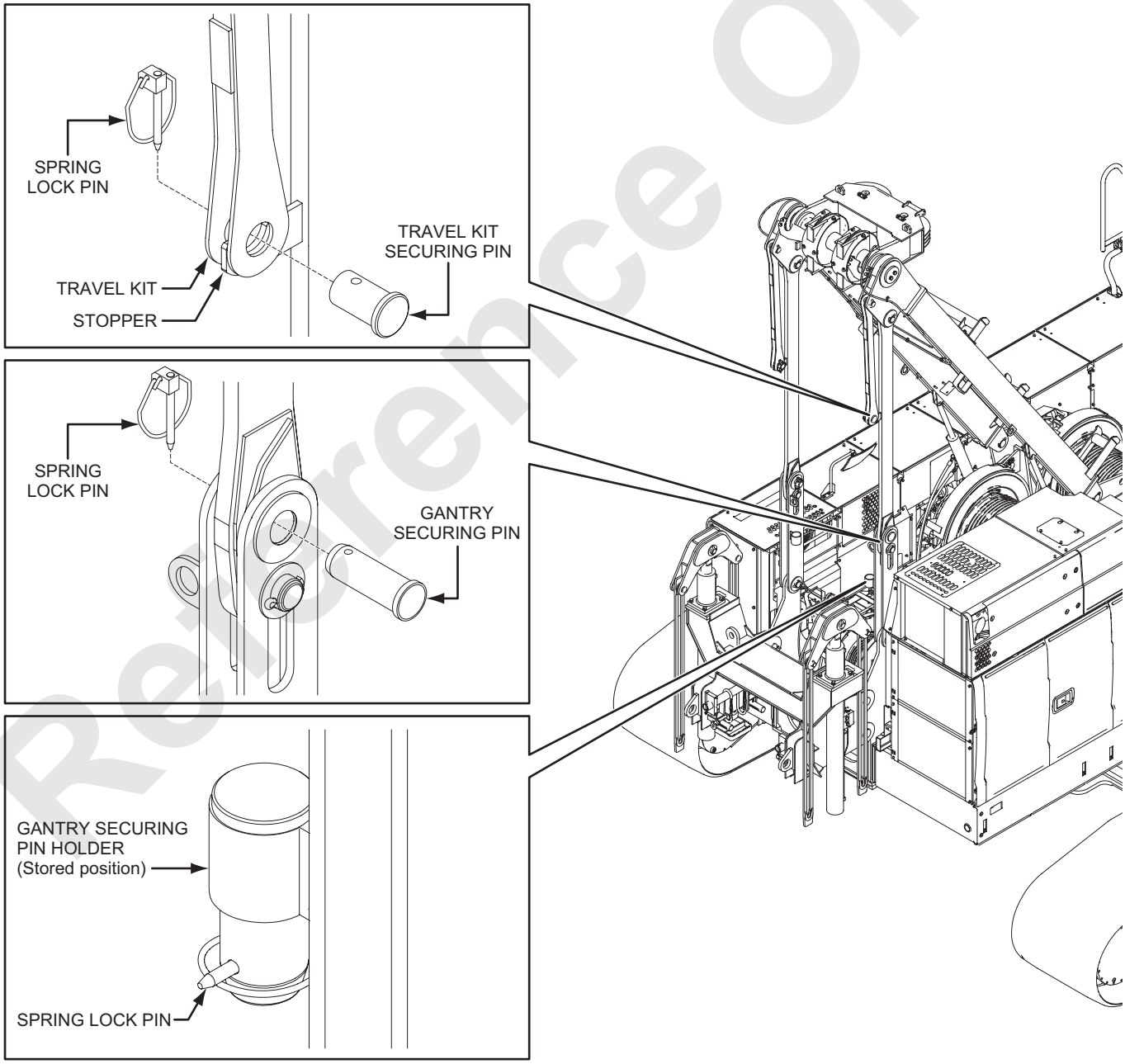

Reference Only

5. Start the engine and set the speed to approx. 1,000 min^{-1} (1,000 rpm).

6. Turning the gantry control switch to lowering side (inward) to lower the gantry.
   At this time, pay out the boom hoist rope to prevent the boom from becoming lifted.

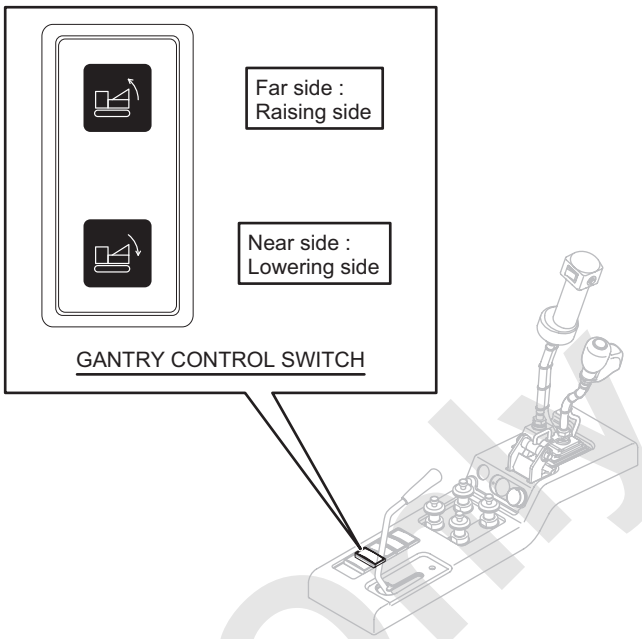

DANGER

Do not enter under or inside of the gantry (or mast). Failure to observe this precaution may result in a serious injury or loss of life.

CAUTION

- **When the gantry is raised or lowered, make sure that there is no persons around the gantry area and observe the raising or lowering condition of the gantry.**
  Failure to observe this precaution may result in a serious injury or loss of life.
- **Before operating the gantry control switch, sound the horn to warn the person around.**
  Failure to observe this precaution may result in a serious injury or loss of life.
- **During crane work or raising the boom, do not operate the gantry control switch.**
  Failure to observe this precautions may result in a serious accident.

DANGER

Never raise the gantry using the boom hoist wire rope or using the assist crane.
The gantry may suddenly drop immediately when the gantry securing pin is pulled out during gantry lowering.
Failure to observe this precaution may result in a serious injury or loss of life.

Reference Only

7. Secure the travel kit links on both right and left side with travel kit securing pin and retain with the spring lock pin.

DANGER

Ensure to connect the travel kit as shown, otherwise the boom may fall down when the gantry is in low position.
Failure to observe this precaution may result in a serious injury or loss of life.

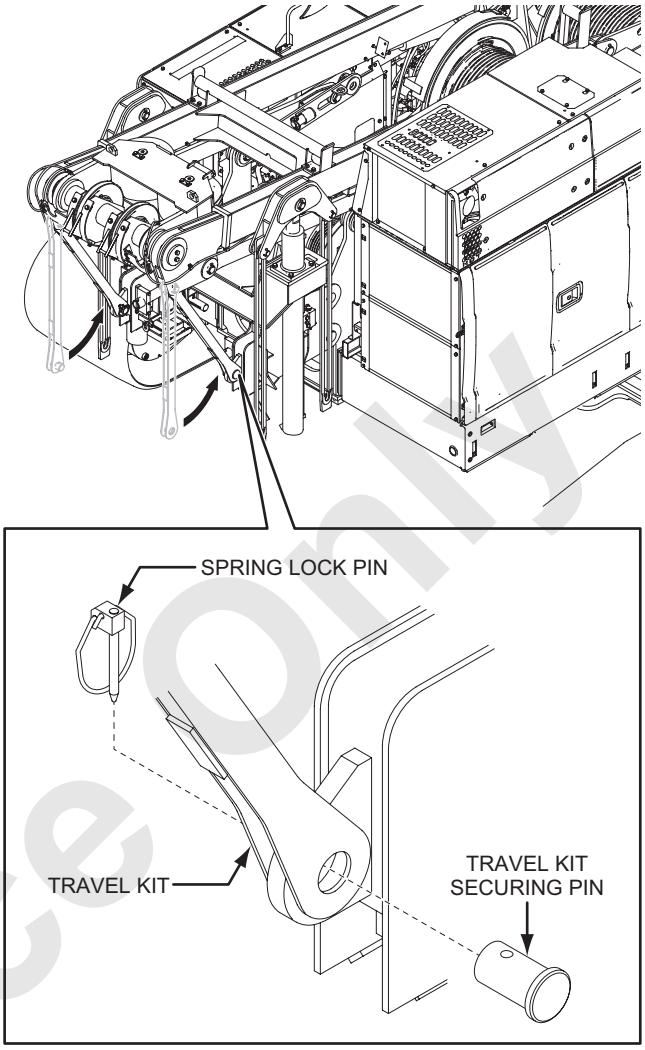

8. Winding up of the boom hoist wire rope to suspend the boom base.

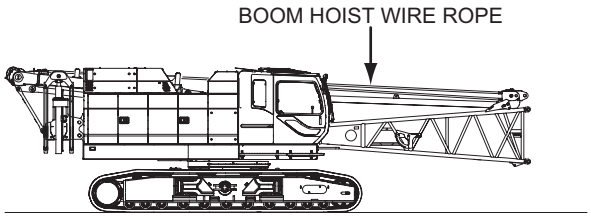

WARNING

- **When working at a high elevation, be sure to use a safety belt to prevent falling.**
  Failure to observe this precaution may result in a serious injury or loss of life.
- **Use a scaffolding board for working on the attachment.**
  Failure to observe this precaution may result in a serious injury or loss of life.
- **Do not stand on component being connected or disconnected.**
  Failure to observe these precaution may result in a serious injury or loss of life.

Reference Only

4.4.8 REMOVAL OF LADDER FOR MACHINERY GUARD

1. Remove the securing pin from left hand side bracket and turn the ladder.

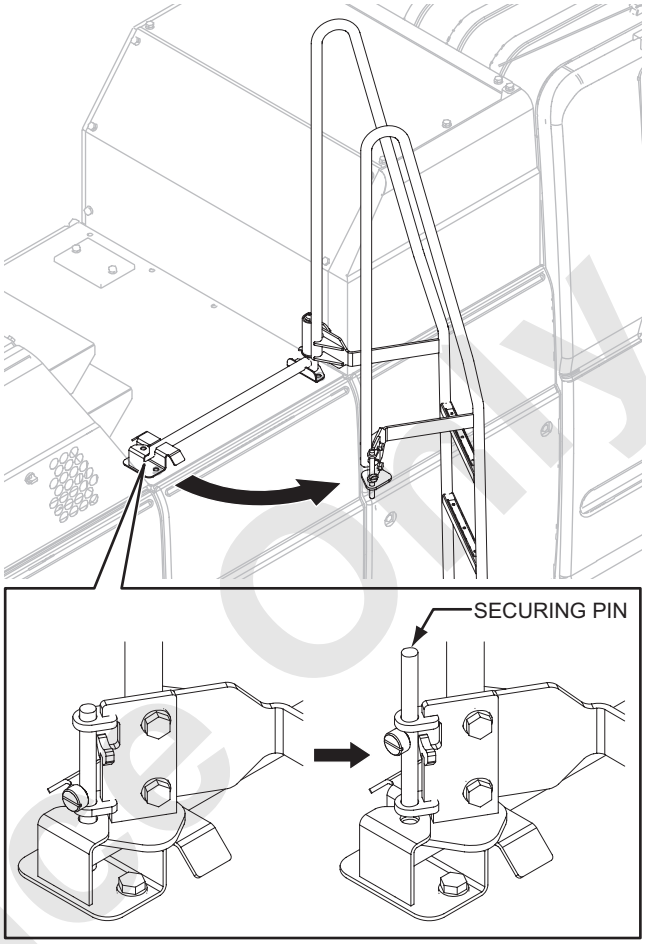

2. Lift up the ladder and remove from the right hand guide.

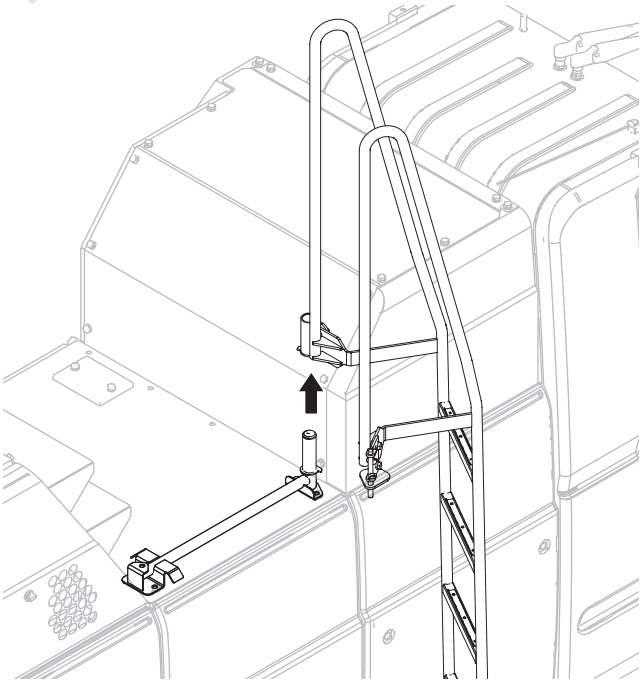

WARNING

When working at a high elevation, be sure to use a safety belt to prevent falling.
Failure to observe this precaution may result in a serious injury or loss of life.

Reference Only

4.4.9 RETRACTING THE CRAWLERS

The crawler retracting procedure is explained in this section.

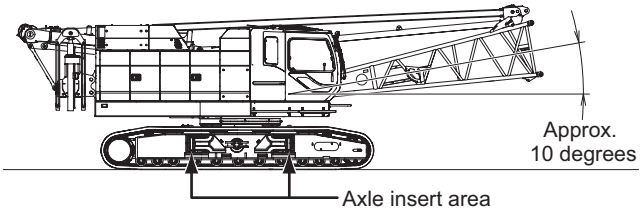

Perform the crawler extending/retracting work under the following conditions.

- Place
  Check a firm and level space enough for the task.
  Also, confirm steel plates or crane mats is placed if necessary.

- Base machine configuration
  Counterweight : None
  Boom : Boom base only
  Boom angle : Approx. 10 degrees

* Although the crawler extending/retracting can be done without the boom base, this article explains the procedure with boom base attached.

WARNING

Ensure the ground for operation is firm and level and place the steel plate or improve the ground condition as required.
Failure to observe this precaution may result in a serious accident.

Prior to extending/retracting, clean the axle extension thoroughly and apply grease (Molybdenum disulphide grease) to the slide area.
If mud is left on, extension or retraction work could be difficult.

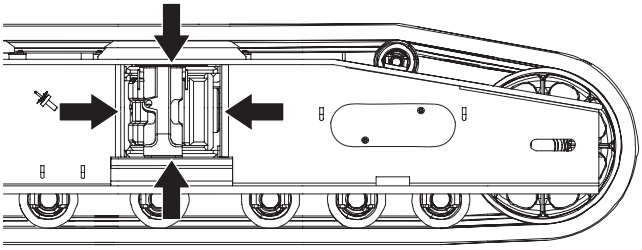

Coat the grease on the sliding surface of axle.

Note

Apply the molybdenum disulphide grease to the axle.

Reference Only

1. Remove the securing lock pin for crawler ext./ret. cylinder on the crawler frame side.

2. Extend the crawler extension cylinder and align with the crawler frame side hole and the insert securing pin.

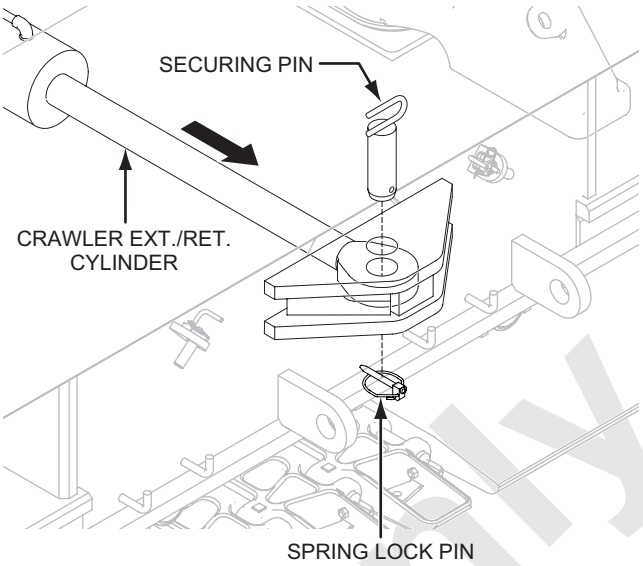

DANGER

Keep out of the spaces under the lifted crawler frame or between the machine and the crawler frame avoid being trapped.
Failure to observe this precaution may result in a serious injury or loss of life.

WARNING

Do not insert finger or hand into a pin hole when aligning, inserting or removing pin.
Failure to observe this precaution may result in a serious injury or loss of life.

3. Swing the main machinery to widen the clearance between the crawler and axle and remove the adjusting shims at four places.
   Each shim has a unique number stamped and stow it accordingly.

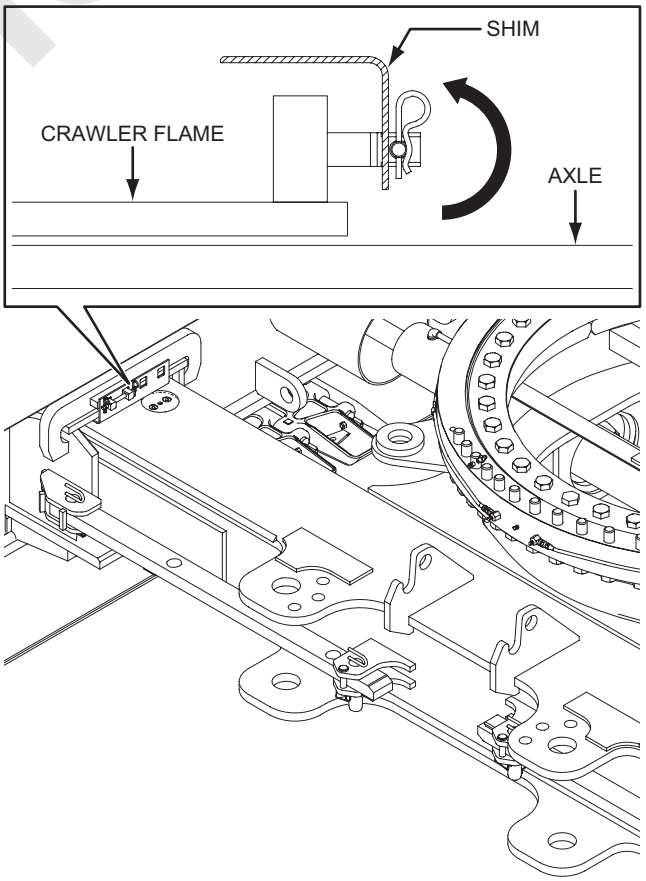

WARNING

Do not insert the finger or hand into the gap between the crawler and axle when installing or removing the shim.
Failure to observe this precaution may result of a serious injury.

Reference Only

4. Take out the securing pin (a) connecting the carbody and link.

WARNING

Do not insert finger or hand into a pin hole when aligning, inserting or removing pin.
Failure to observe this precaution may result in a serious injury or loss of life.

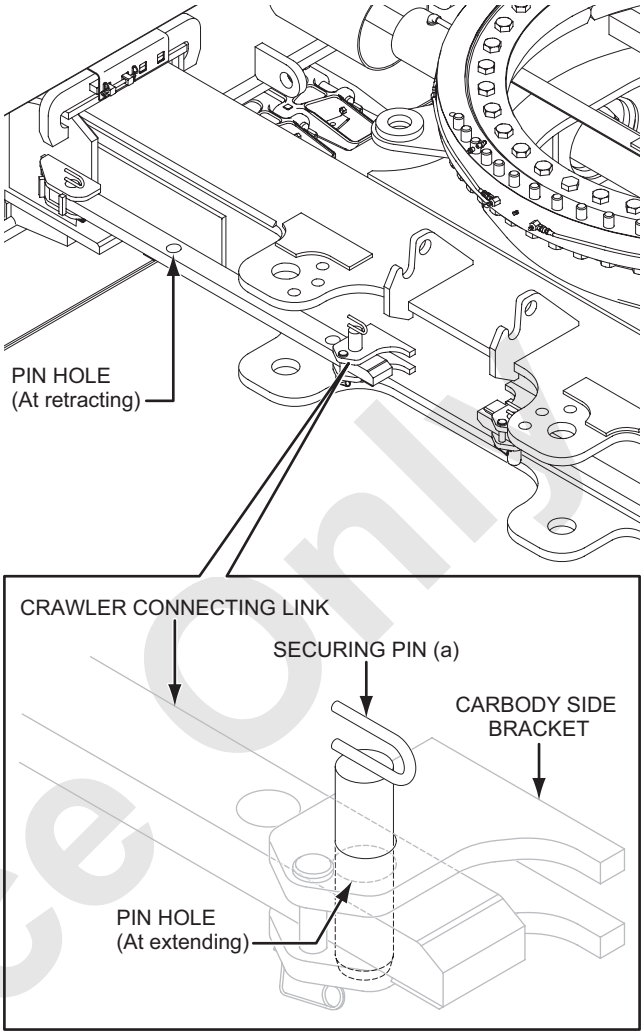

5. Face the upper machinery to the front.

WARNING

To prevent overturn of the base machine ensure to engage the swing brake and lock.
Failure to observe this precaution may result in a serious accident.

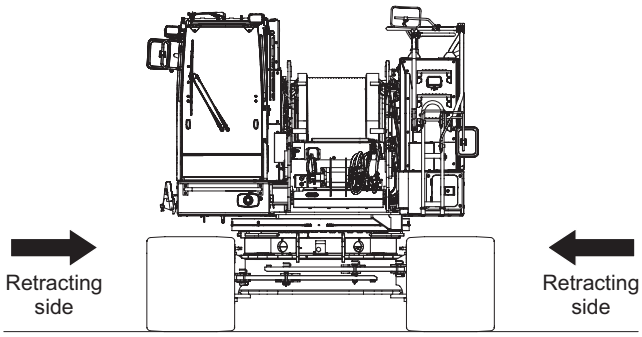

Reference Only

6. Check to see that there are obstacles in the area of crawler retraction.
   Turn the crawler retract switch to retracting side. If the crawler can't be retracted smoothly, repeats manipulate the switch both sides for extending and retracting or travel forward and backward.

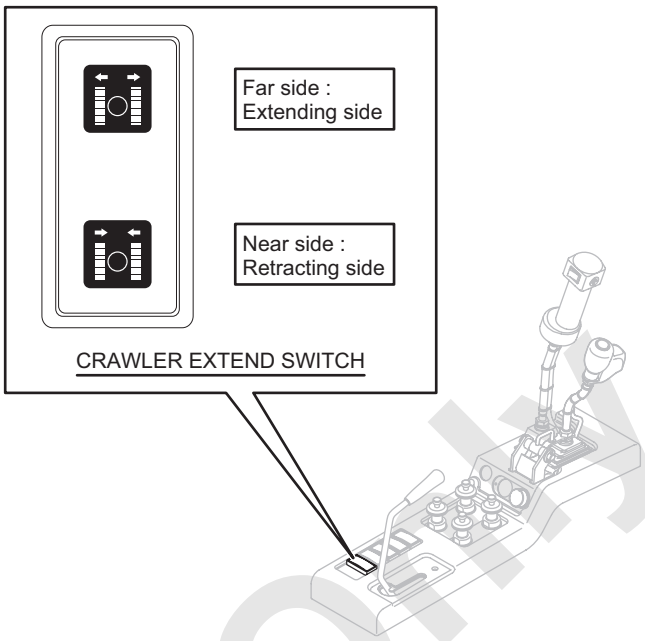

7. If the crawler still can't be retracted with the step 6 above performed due to bad ground condition, swing the upper machinery slowly to toward the side of the crawler desire to be retracted until the upper machine comes to right angle with the crawler.
   In this case, ensure to make the crawler to be retracted comes to the front side (operator cab side).

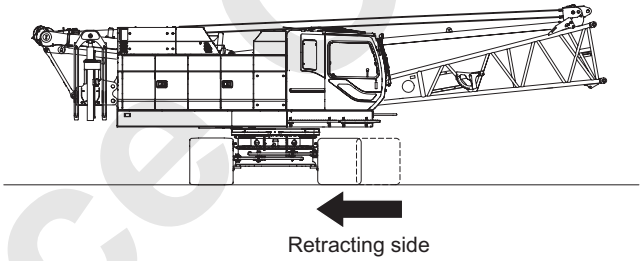

8. Insert the securing pin (a) when the crawler connecting link come fully retracted position.

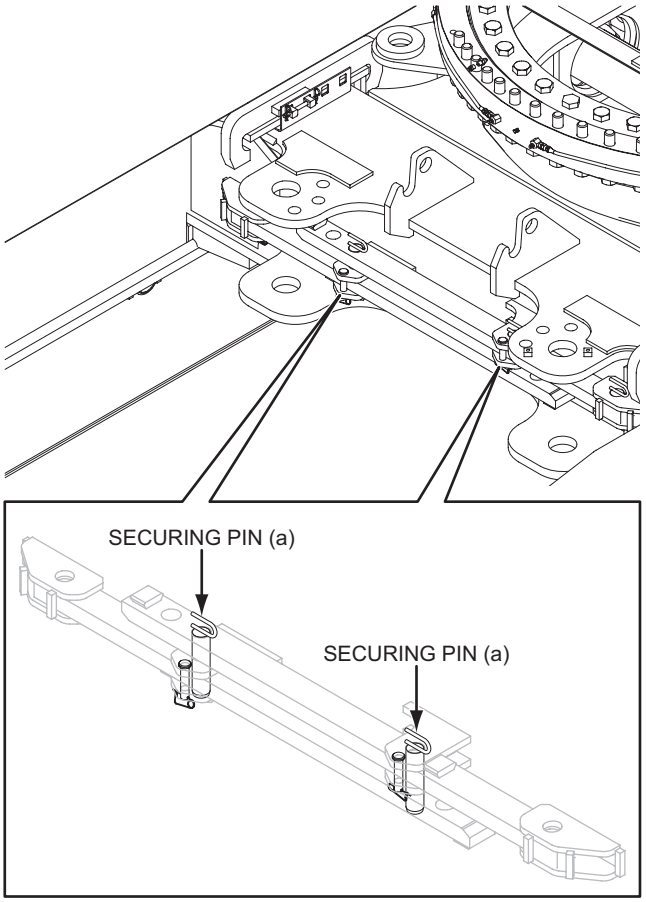

Reference Only

9. Remove the rotation preventive brackets from the pivot area of the axle extension and place them to storage places at all 4 locations.

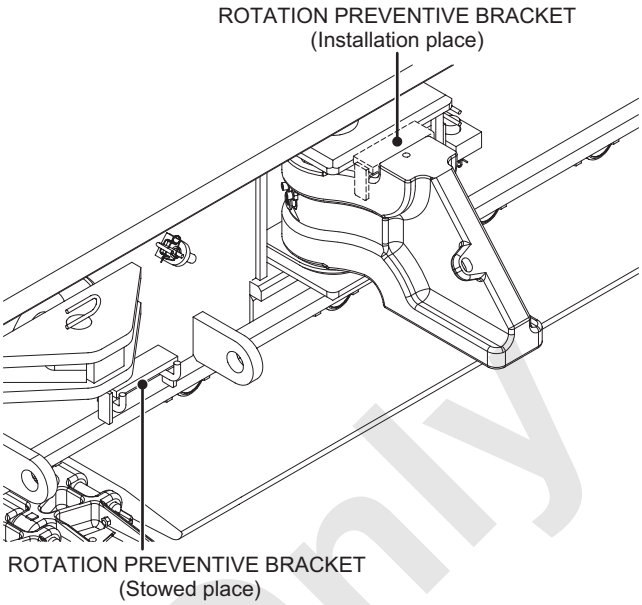

10. Remove the axle extension securing pins on the crawler frame.

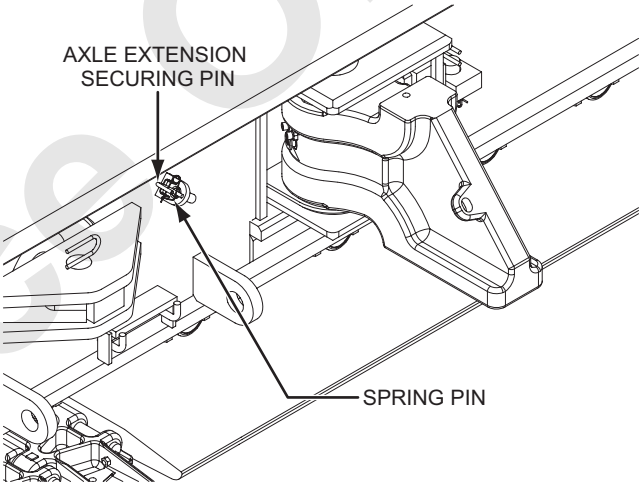

Reference Only

11. Rotate all 4 axle extensions for 90 degrees toward the frame to make them right angle with axles.

12. Secure the axle extension to the crawler frame with the axle extension securing pin and insert the spring pin on all 4 locations.
    Pay attention to the installation direction of axle extension securing pin for safety as shown.

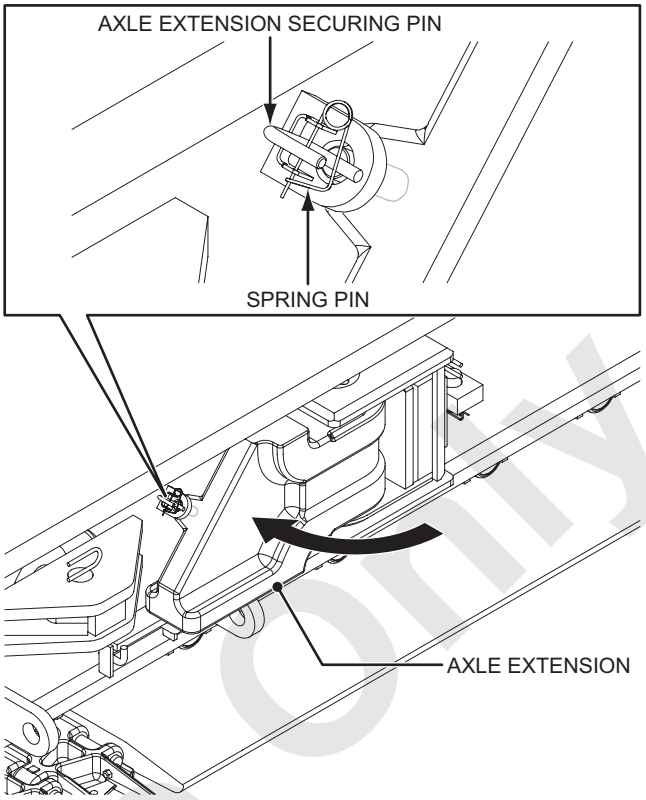

13. Remove the securing pin connecting the crawler ext./ret. cylinder with the crawler frame and retract cylinder fully.
    The removed securing pin is to be inserted to the crawler side pin hole and secure with the spring lock pin.

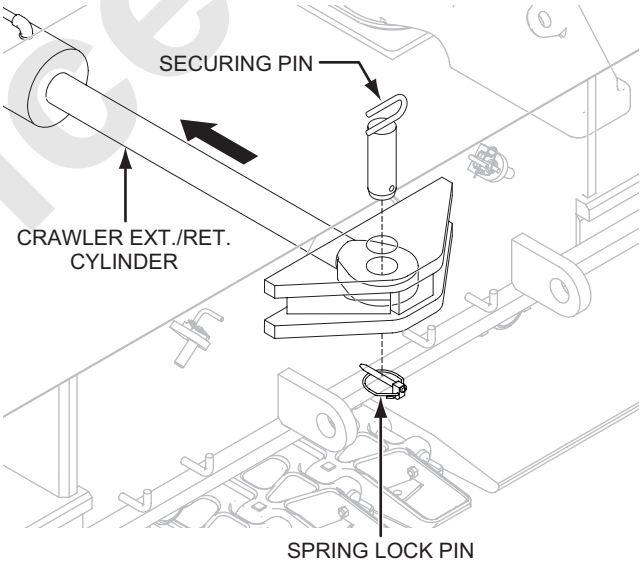

⚠ WARNING

Do not insert finger or hand into a pin hole when aligning, inserting or removing pin.
Failure to observe this precaution may result in a serious injury or loss of life.

⚠ CAUTION

The crawler Ext./Ret. cylinder should be kept in full retract position unless the crawler is to be extend or retract.
Otherwise may result in premature damage of cylinder due to sticking of dust/dirt on the sliding part of cylinder.
Failure to observe this precaution may lead to damage the parts.

Reference Only

4.4.10 BASE MACHINERY LOADING ONTO TRAILER

Check the following points before starting the work.

- Place
  Ground must be firm and level.
  The ground has been improved and steel plates have been placed.

- Meeting for work procedure and safety
  Prior to work, a meeting must be held to review the work procedure and safety with all personnel and confirm of each personnel's roles and responsibilities.

- Pre-work inspection
  Conduct the pre-work inspection.

- Transportation dimensions, mass
  Transporting the base machinery on a trailer may require permit(s) issued by the related authority(ies).
  Refer to the article "8.2 DIMENSION, WEIGHT OF EACH COMPONENT".
  Prepare proper trailer for the machinery weight and size.

- Transportation figure
  Set the boom angle between 5 degrees to 10 degrees range.
  Adjust the angle so that the boom will not hit the trailer during loading to the trailer.
  Boom angle also must be adjusted to fit within the allowable transport height.

⚠ DANGER

Do not raise the boom to higher than 10 degrees angle when loading into trailer.
The machine may overturn backward.
Failure to observe this precaution may result in a serious injury or loss of life.

Reference Only

1. Start the engine and set the speed to low.
   (800 mim^{-1} [800 rpm])
   Swing the upper machinery to parallel with the crawler and engage the swing lock and brake.

2. Loading the machine onto trailer using the loading ramp with the drive tumbler at rear side.

DANGER

Do not swing the upper machinery on the trailer to avoid the machine overturning.
Failure to observe this precaution may result in a serious accident.

DANGER

Ensure to connect the travel kit as shown, otherwise the boom may fall down when the gantry is in low position.
Failure to observe this precaution may result in a serious injury or loss of life.

WARNING

The gravity center may shift suddenly at the border between the loading ramp and the trailer.
Set the travel speed select switch to LOW and travel with slow and constant speed.
Failure to observe this precaution may result in a serious injury or loss of life.

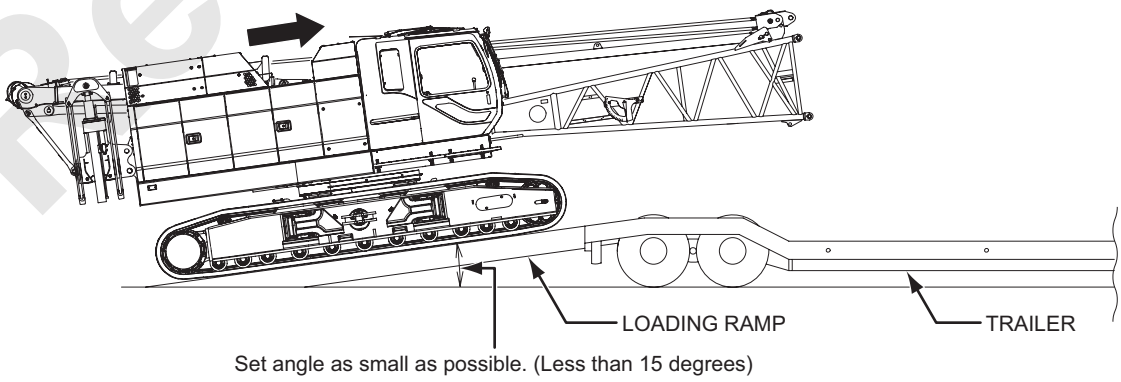

Reference Only

3. Secure the lower machinery to the trailer with proper gears (tie downs and binder chains) to prevent it from shifting during transportation.

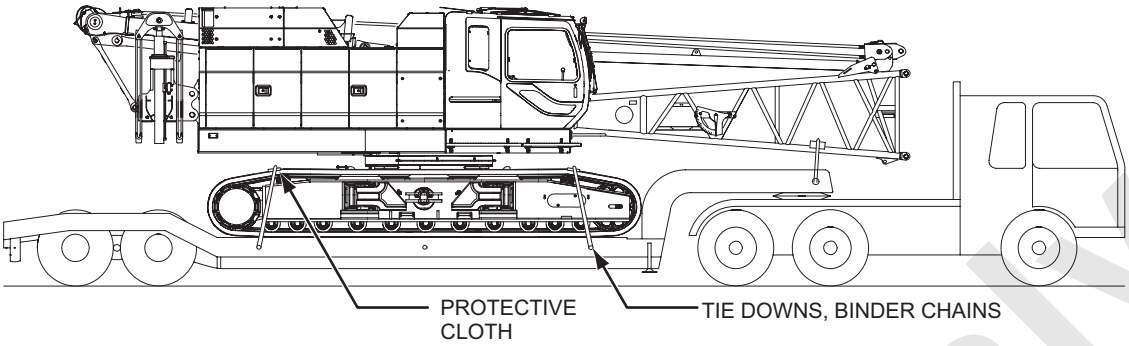

4. Close and lock the cab door, window and guard doors.

Reference Only

4.4.11 STORE AND REMOVAL OF CAB STEP

Stow or remove the cab step by the following procedure for transportation.

Note

To make transportation width to 2,990 mm (9 ft. 10 in.), remove all side steps completely.

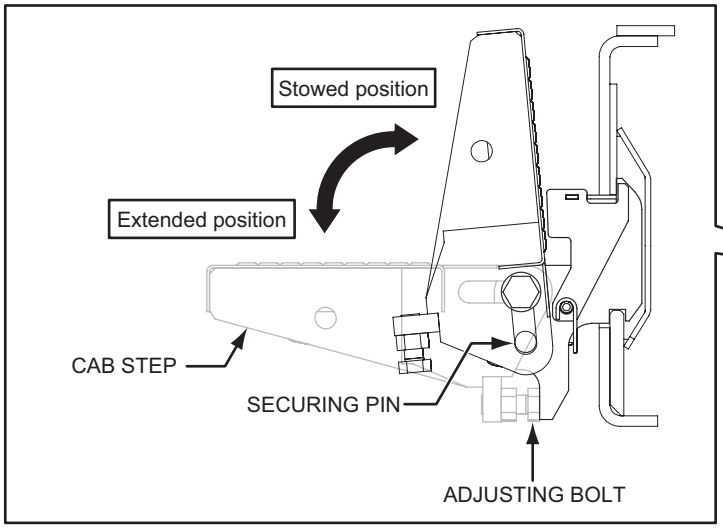

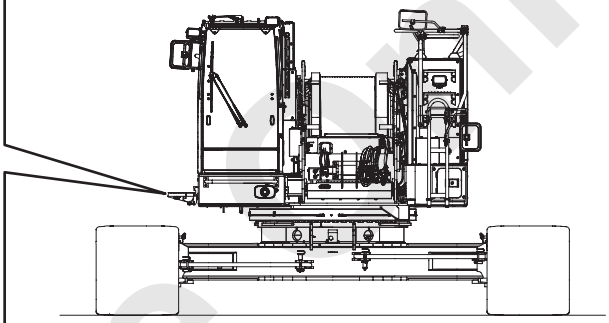

1. Store the cab step

(1) Rotate the cab step to upward.
(2) Slide the step to lower side for storage position and secure the steps with the securing pins respectively.

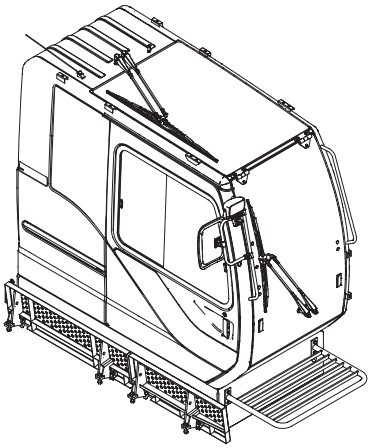

Stowed position

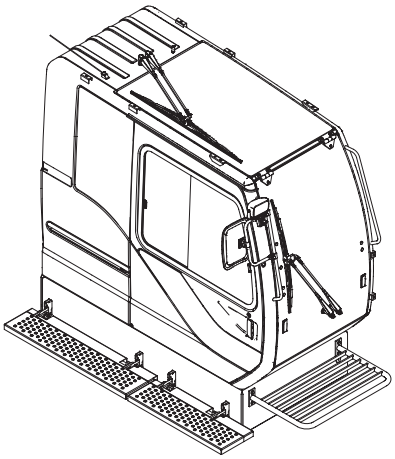

Extended position

Reference only

2. Removal of cab step

(1) Remove securing pin from the bracket for prevent unhinge the step and remove the bracket.

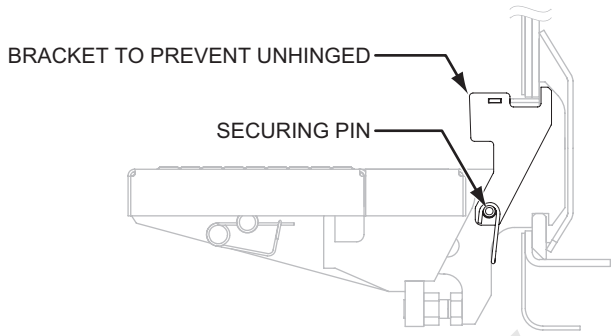

(2) Rotate the step to approx. 85 degrees.
At this time care the step not to interfere with the guard and cab.

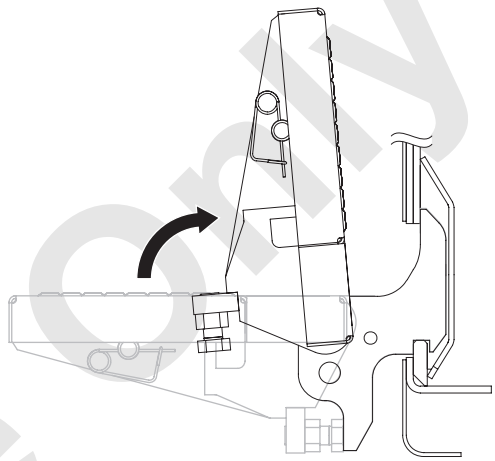

(3) Lift the step and remove the securing part of installation bracket from the guard.

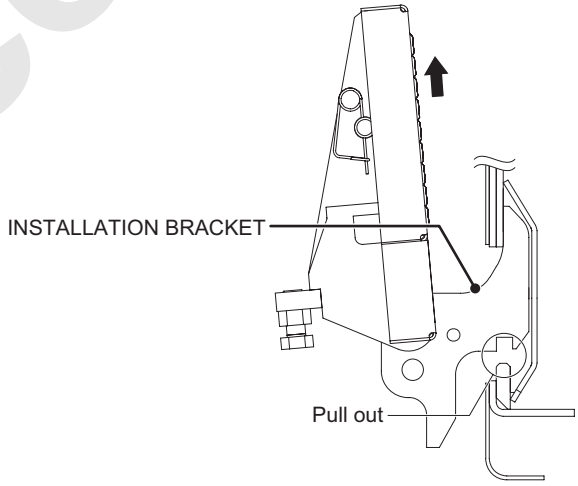

(4) When disengage the securing part, the installation bracket will rotate by its self-weight and remove the step toward to pull closer from the guard.

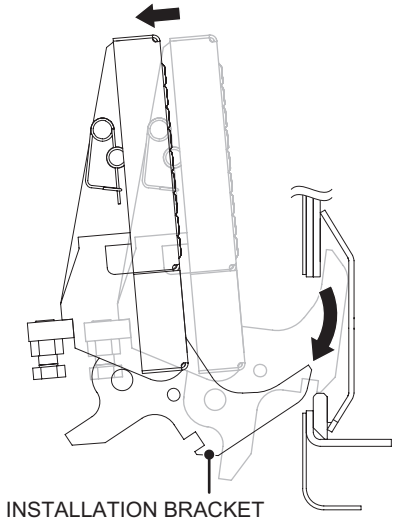

Reference Only

4.5 TRANSPORTATION

In case of transport the machine or an attachment with trailer/track, there will be various combinations in deferent weight, size or type of trailer/track and the fleet configurations.

Carefully review the dimensions and weight of components for a safe transportation.

There will be limitations on the size and weight due to regulations.
Submit the necessary document to obtain the permit(s) from the respective authority(ies).
For the details, refer to the applicable traffic regulations.

Refer to the article “9.2 DIMENSION, WEIGHT OF EACH COMPONENT”.

WARNING

Do not make excessive loading limit or dimension limit.
Do not perform unreasonable transportation since it may lead to accident involving person or property.
Failure to observe these precautions may result in serious injuries or loss of life.

Check if the base machine has been made following conditions before transportation.

- Make sure that the swing lock, each drum lock are engaged.
- Make sure that each control lever, switch are in neutral or at stop position.
- Make sure that the room lights or outside lights are off and the engine is stopped.
- Make sure that the steps, mirrors, hand rails or any protruding object are stowed or removed.
- Place the wood blocking between the carbody or axle extension and the trailer bed to prevent the machinery from slipping.
- Securely tie-down the load onto the trailer/track firmly with proper gears (tie downs and binder chains) to prevent them from shifting during transportation.
- In case of transportation with the crawler removed, do not secure by the axle extension. Secure at the axle.

Reference Only

4.6 INSTALLATION/REMOVAL OF BOOM BASE

4.6.1 BOOM BASE INSTALLATION

The boom base installation is explained here.
Prior to work, check the machine condition again.

- Machine must be placed on the firm and level ground.
- The crawlers are extended.
- Securing pins are installed to the crawlers and the shims are inserted on the axles.

DANGER

Do not stand on, or enter under/inside of the attachment being assembling/disassembling.
Failure to observe this precautions may result in a serious injury or loss of life.

1. Apply grease on the boom foot pins and pin holes. Confirm no foreign particle on the pin and pin hole.

2. With use of proper rigging equipment and method, lift up the boom base with an assist crane and install it to the base machine.
   When lifting the boom, should be lifted horizontally.
   Secure the backstop to prevent it from coming off.

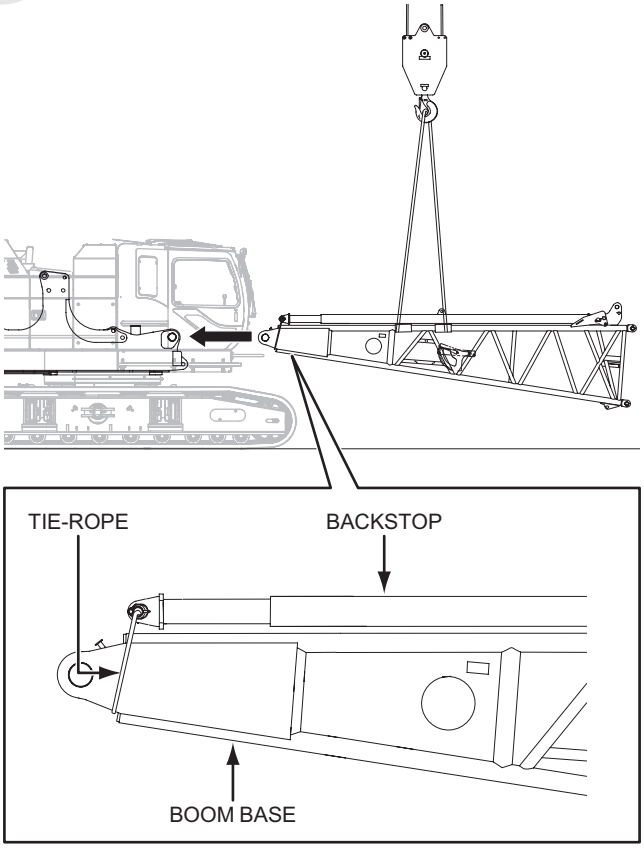

Reference Only

3. Align the boom foot pin hole on both sides and insert the right side pin from inside then the left. Insert the lock pins from top to bottom and fix them with the split pins.

4. To reduce the gap between the boom base and the swing frame, insert shims while inserting the foot pins.
   Do not use hammer to force the shim into the gap.

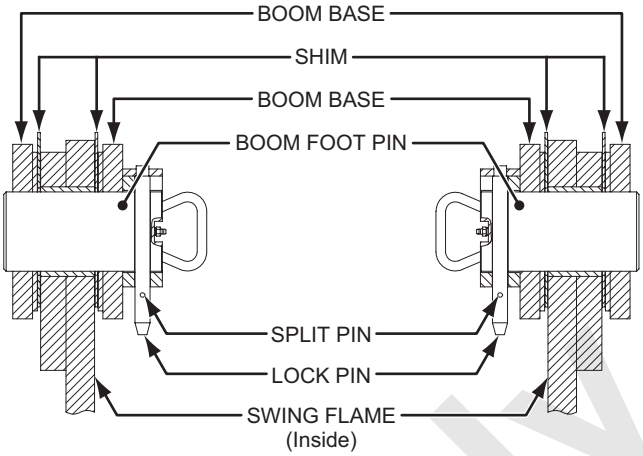

Boom foot area

WARNING

Do not insert finger or hand into a pin hole when aligning, inserting or removing pin.
Failure to observe this precaution may result in a serious injury or loss of life.

5. Place the boom base connector portion on the wood blocking and remove the sling wire rope.

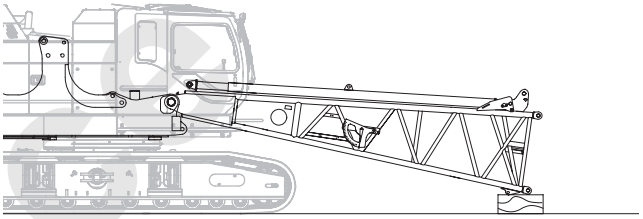

WARNING

Do not lower the boom base tip below ground level, otherwise interfere the boom and/or backstop with surrounding components and lead to damage parts.

6. Apply grease to the left and right boom foot pins at the grease fittings.

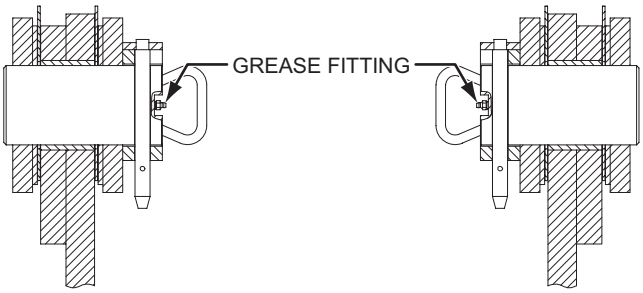

Boom foot area

7. Connect the cable reel and angle detector wiring refer to the article “3. LOAD SAFETY DEVICE”.

Reference Only

4.6.2 BACKSTOP INSTALLATION

1. Lift and support the back stop outer pipe by an assist crane and sliding out the inner pipe toward to base machine.

2. Align the pin holes between the swing frame and the backstop and insert the securing pin from inside. (Both sides)

3. Insert the spring lock pin to the securing pin.

WARNING

Do not insert finger or hand into a pin hole when aligning, inserting or removing pin.
Failure to observe this precaution may result in a serious injury or loss of life.

WARNING

Do not stand under, or on inline or projection of the backstop to prevent accident.
Failure to observe this precaution may result in a serious injury or loss of life.

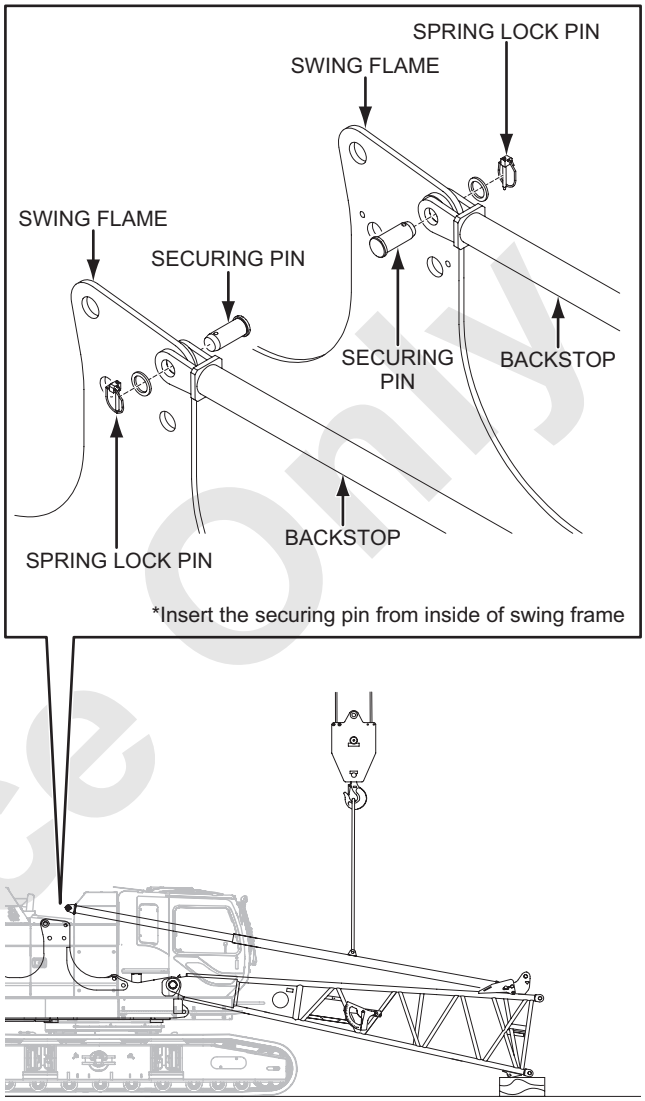

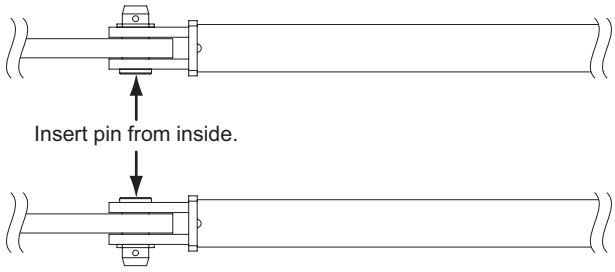

Reference Only

4.6.3 UPPER SPREADER INSTALLATION

1. Lift the upper spreader by an assist crane and align the holes of upper spreader and boom base tip bracket.

2. Inserting the spreader securing pins and be secure the upper spreader.
   (This pin will be removed after the boom hoist wire rope has been reeved between lower and upper spreader.)

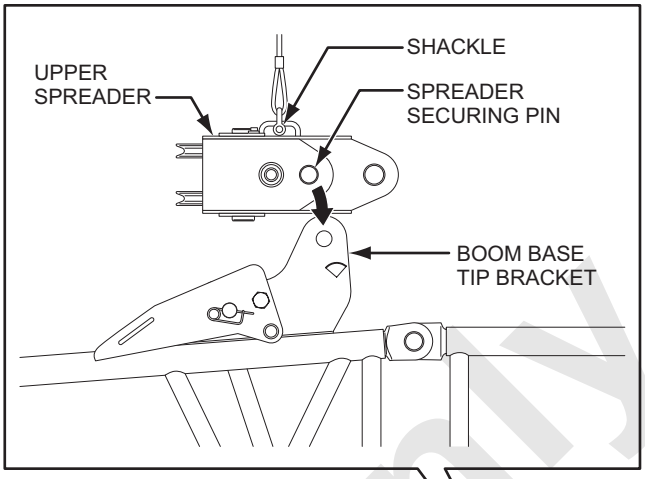

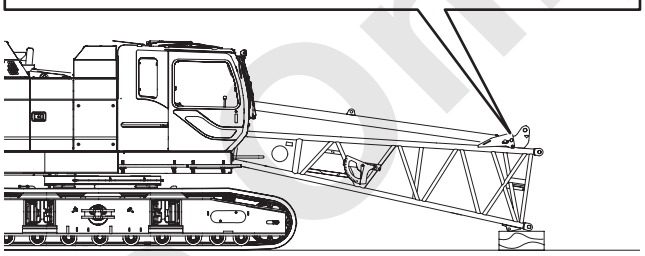

WARNING

Do not insert finger or hand into a pin hole when aligning, inserting or removing pin.
Failure to observe this precaution may result in a serious injury or loss of life.

WARNING

- **When working at a high elevation, be sure to use a safety belt to prevent falling.**
  Failure to observe this precaution may result in a serious injury or loss of life.
- **Use a scaffolding board for working on the attachment.**
  Failure to observe this precaution may result in a serious injury or loss of life.

Reference Only

4.6.4 REEVING BOOM HOIST WIRE ROPE

This is to explain reeving method when the boom hoist wire rope has been wound on the boom hoist drum.

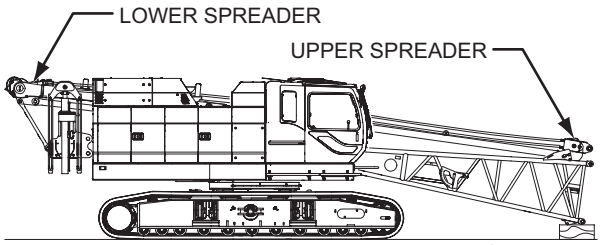

WARNING

- **When handling the wire rope, use leather gloves to prevent injury on the fingers or hands.**
  Failure to observe this precaution may result in a serious injury.
- **Take extra care to work on the moving wire rope not to touch the sheave and wire rope to prevent accident of being crushed or being entangled.**
  Failure to observe this precaution may result in a serious injury or loss of life.

1. Turn the boom drum control lever to lowering side to pay out the wire rope from the boom drum.

2. Reeve the wire rope through the upper spreader and the lower spreader preventing with the wire rope from twisting, kink or coming out of sheaves.

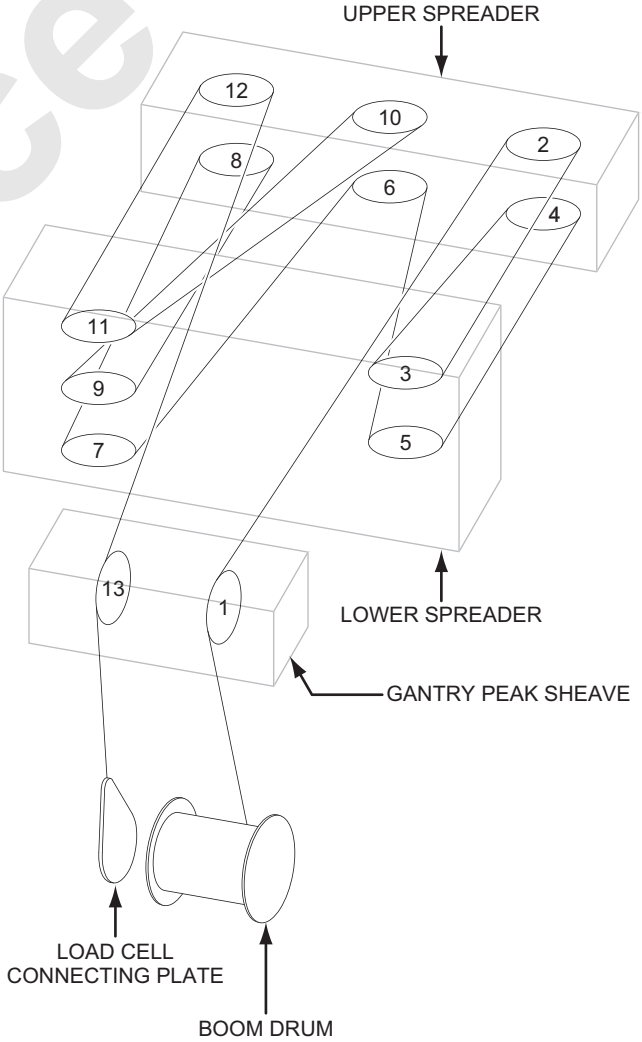

CAUTION

Be sure to follow the instruction of reeving order of wire rope.
Otherwise wire rope interference may occur and result in a strand cut or damaged rope.
Failure to observe this precaution may lead to damage the parts.

WARNING

Position all control levers to the neutral and check safety around the machine before starting the engine.
Even if each control levers are not in neutral position, the engine can start.
However each motion can't work without positioning the control lever to neutral once.

Reference Only

3. Secure the wire rope end to the winch link using the rope socket, wedge and clamp.

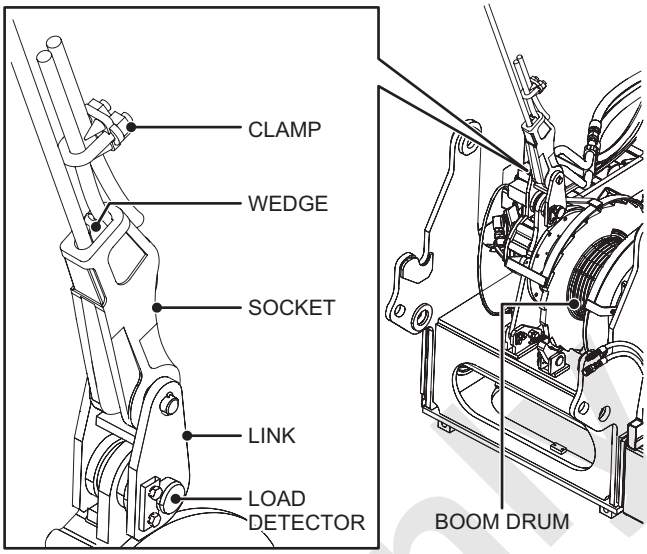

WARNING

- **When working at a high elevation, be sure to use a safety belt to prevent falling.**
  Failure to observe this precaution may result in a serious injury or loss of life.
- **Use a scaffolding board for working on the attachment.**
  Failure to observe this precaution may result in a serious injury or loss of life.

Reference Only

4.6.5 INSTALLATION OF BOOM HOIST WIRE ROPE TO THE DRUM

WARNING

Position all control levers to the neutral and check safety around the machine before starting the engine.
Even if each control levers are not in neutral position, the engine can start.
However each motion can't work without positioning the control lever to neutral once.

WARNING

- **When handling the wire rope, use leather gloves to prevent injury on the fingers or hands.**
  Failure to observe this precaution may result in a serious injury.
- **Take extra care to work on the moving wire rope not to touch the sheave and wire rope to prevent accident of being crushed or being entangled.**
  Failure to observe this precaution may result in a serious injury or loss of life.

1. Secure the wire rope end to the boom hoist drum with the wedge.

2. Wind up the wire rope to the boom drum.

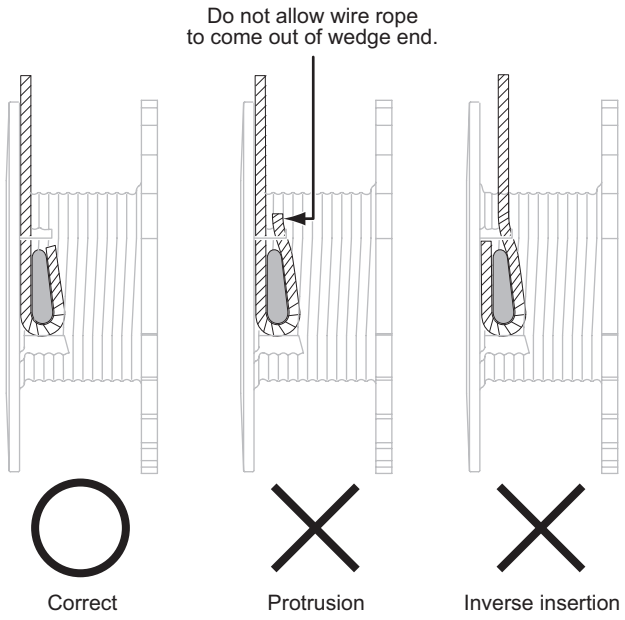

Reference Only

4.6.6 WINDING UP OF BOOM HOIST WIRE ROPE TO THE DRUM

This is to explain boom hoist wire winding method to the drum.

WARNING

- **When working at a high elevation, be sure to use a safety belt to prevent falling.**
  Failure to observe this precaution may result in a serious injury or loss of life.
- **Use a scaffolding board for working on the attachment.**
  Failure to observe this precaution may result in a serious injury or loss of life.

1. Confirm if the upper spreader is securing with the pin to the boom base tip bracket.

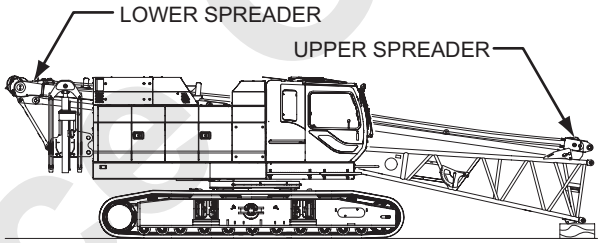

2. Disconnect wire rope end from the link on the winch.

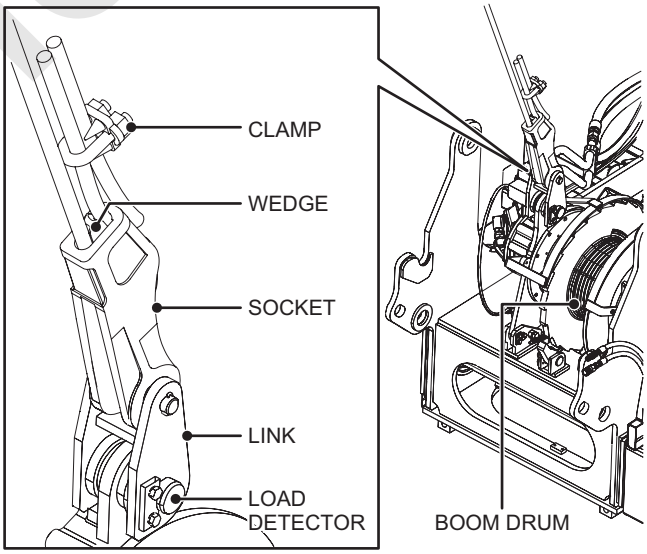

WARNING

- **When handling the wire rope, use leather gloves to prevent injury on the fingers or hands.**
  Failure to observe this precaution may result in a serious injury.
- **Take extra care to work on the moving wire rope not to touch the sheave and wire rope to prevent accident of being crushed or being entangled.**
  Failure to observe this precaution may result in a serious injury or loss of life.

Reference Only

3. Wind the wire rope to the boom drum.
   Taking care while winding the wire rope, give adequate tension on the rope and so that not to rough spooling by tapping the hummer.

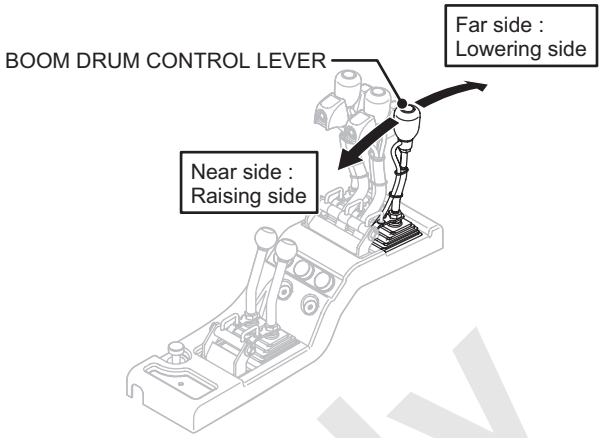

4. After the wire rope winding is completed, secure the wire rope end to the outer layer on the drum with the thin wire.

Reference Only

4.6.7 UPPER SPREADER REMOVAL

The upper spreader removal after the boom hoist wire rope is wound up to the drum is explained here.

1. Remove the spreader securing pins at the boom base tip bracket.

2. Lift the upper spreader by assist crane and lower it to the ground.

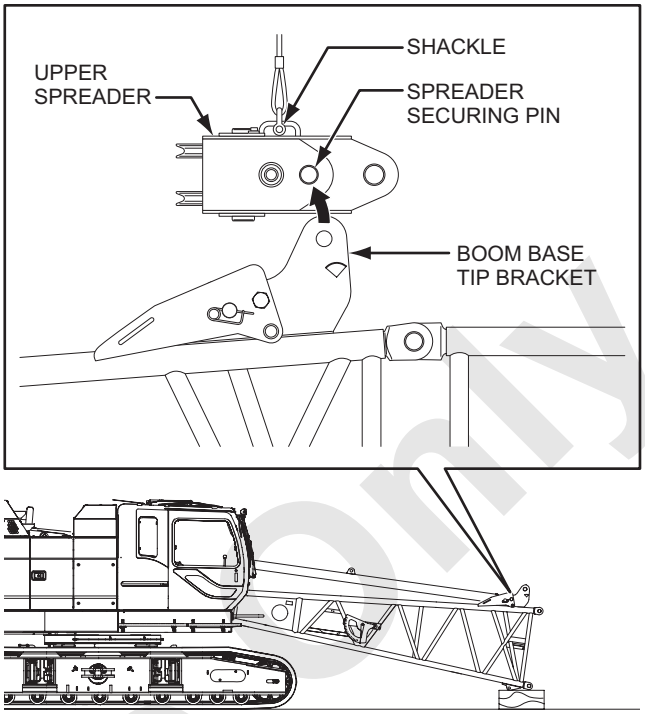

WARNING

Do not insert finger or hand into a pin hole when aligning, inserting or removing pin.
Failure to observe this precaution may result in a serious injury or loss of life.

WARNING

- **When working at a high elevation, be sure to use a safety belt to prevent falling.**
  Failure to observe this precaution may result in a serious injury or loss of life.
- **Use a scaffolding board for working on the attachment.**
  Failure to observe this precaution may result in a serious injury or loss of life.

Reference Only

4.6.8 BACKSTOP REMOVAL

1. Support the backstop outer pipe with an assist crane.

2. Remove the spring lock pin and securing pin from swing frame and slid in the back stop inner pipe toward to the boom base tip side.
   Removed securing pins and spring pins are to be installed on the backstop side.

WARNING

Do not insert finger or hand into a pin hole when aligning, inserting or removing pin.
Failure to observe this precaution may result in a serious injury or loss of life.

WARNING

Do not stand under, or on inline or projection of the backstop to prevent accident.
Failure to observe this precaution may result in a serious injury or loss of life.

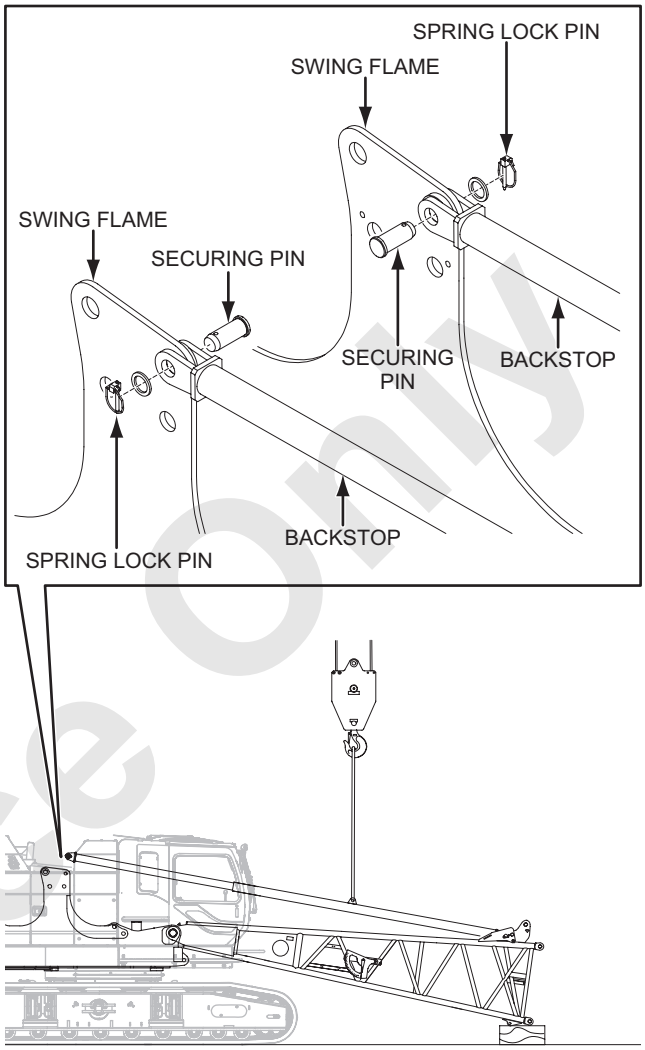

3. Secure the backstop to the boom base with tie-rope while supporting the backstop with an assist crane. (Both sides)

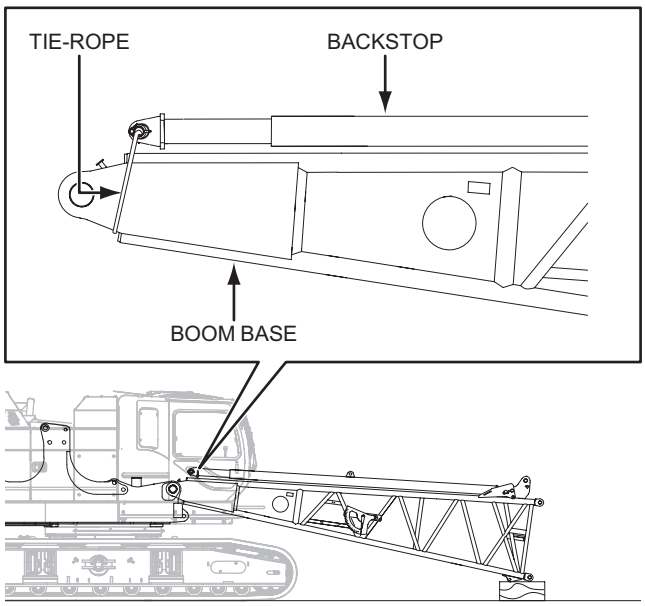

Reference Only

4.6.9 REMOVAL OF BOOM BASE

Although this machine is designed to transport with the boom base attached, this article explains the removal procedure of the boom base if it becomes necessary to transport with the boom base removed.

Prior to work, check the machine condition again.

- Machine must be placed on the firm and level ground.
- The crawlers are extended.
- Securing pins are installed to the crawlers and the shims are inserted on the axles.

DANGER

Do not stand on, or enter under/inside of the attachment being assembling/disassembling.
Failure to observe this precautions may result in a serious injury or loss of life.

DANGER

Do not stand or work under, inside or on the boom structure to prevent accident due to sudden fall of the attachment.
Failure to observe this precaution may result in a serious injuries or loss of life.

1. Remove the wiring of the cable reel and the angle detector refer to the article “3. LOAD SAFETY DEVICE”.

2. Place the boom base connector portion on to the wooden block and support the boom base with an assist crane.

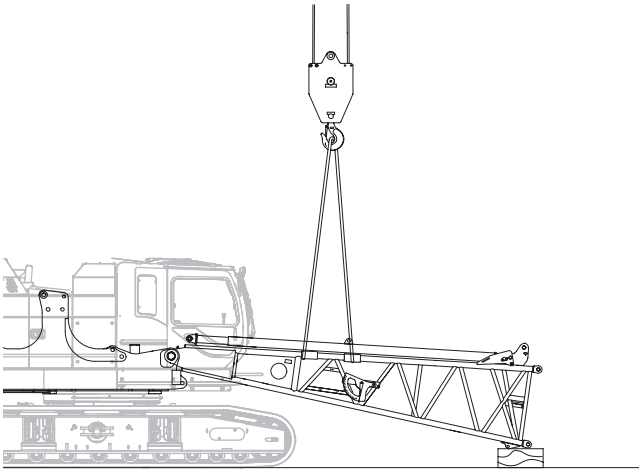

Reference Only

3. Pull out the cab side (right side) boom foot pin first and then left side foot pin.
   Remove the shims too while removing the foot pins.

WARNING

Do not insert finger or hand into a pin hole when aligning, inserting or removing pin.
Failure to observe this precaution may result in a serious injury or loss of life.

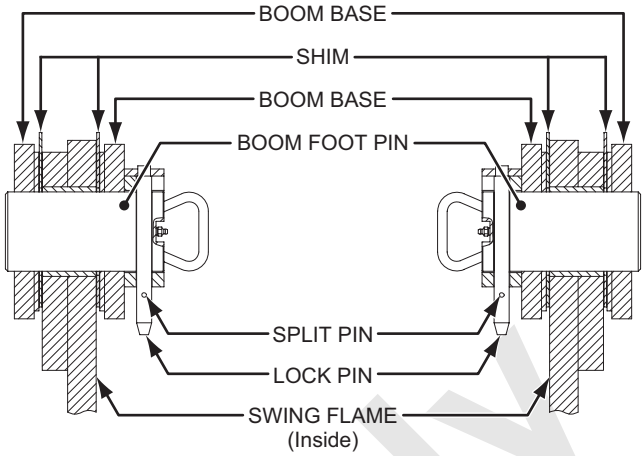

Boom foot area

4. Travel the machine backward slightly and lower the boom base on the ground with the assist crane.

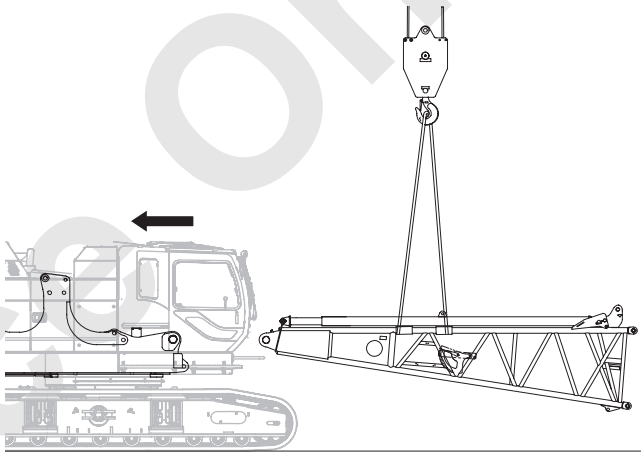

Reference Only

4.7 CARBODY WEIGHT INSTALLATION (WHEN USING ASSIST CRANE)

4.7.1 CARBODY WEIGHT INSTALLATION

DANGER

Do not enter under the weight or stand between the weight and surrounding object.
Failure to observe this precaution may result in a serious injury or loss of life.

1. Preparation of carbody weight installation

(1) This machine's carbody weight is composed of two pieces.
Never use the carbody weight other than specified one.

EACH WEIGHT MASS

Carbody weight	Weight
Weight (1)	7.2 t (15,873 lbs)
Weight (2)	7.2 t (15,873 lbs)

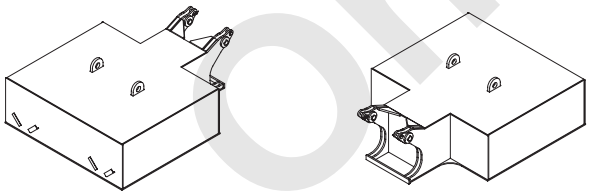

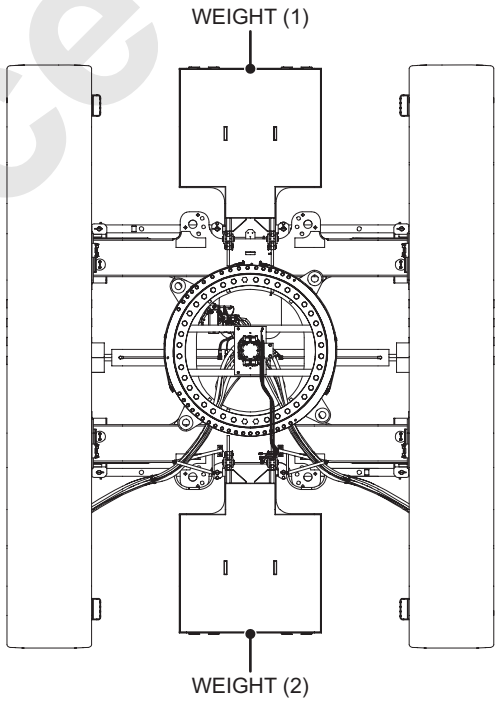

Reference Only

(2) Before installing the carbody weight, check that the machine is in the following conditions.

- Gantry : Work position
- Ground : Firm and level
- Crawlers : Extended

WARNING

As to the stability in swing and traveling to avoid the machine turnover, refer to the article "4.1 SWING AND TRAVEL STABILITY".
Failure to observe this precaution may result in a serious injury or loss of life.

(3) When installing or removing the carbody weight, prepare the tools as listed below.

TOOL

- Attached tool set
- Assist crane 25 t (55,120 lbs) capacity
- Sling wire rope
  25 mm dia. (2-15/16″ dia.) × 8 m (26′) × 2
- Shackle 10 t (22,050 lbs) × 2

2. Carbody weight installation

(1) Attach the shackles to the lifting brackets of the weight(1) and lift up with the assist crane.

DANGER

Do not enter under the weight or stand between the weight and surrounding object.
Failure to observe this precaution may result in a serious injury or loss of life.

(2) Bring the carbody weight (a) portion to right above the carbody side hanging bracket and rest it on the bracket.

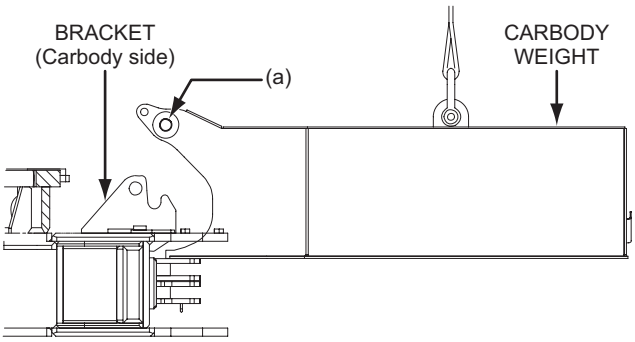

Reference Only

(3) Insert the carbody weight installation pin and secure the pin with spring pin.
(2 places both left and right side)

WARNING

Do not insert finger or hand into a pin hole when aligning, inserting or removing pin.
Failure to observe this precaution may result in a serious injury or loss of life.

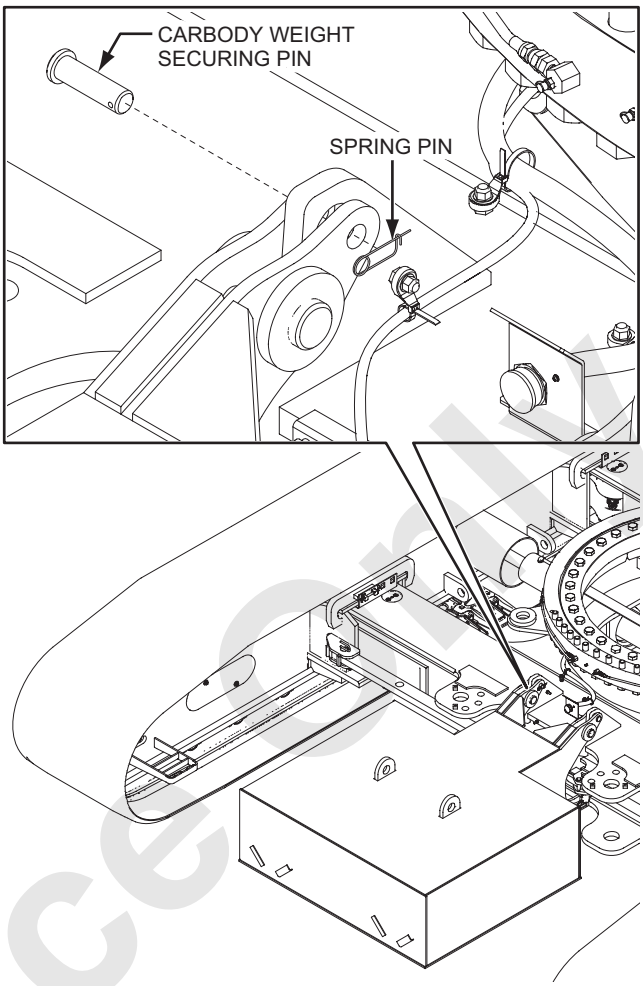

(4) Install the carbody weight (2) as same manner as carbody weight (1).

Reference Only

3. In case of the carbody weight detecting unit is equipped (option)

- Connect the detect harness installed on the front side weight and base machinery harness (CN-914F) and both water proof caps too.
- Detect harness installed on the weight (2) is not to be connected.
- If the carbody weight is not equipped as use as reduced weight, leave the base machinery harness with cap as is.

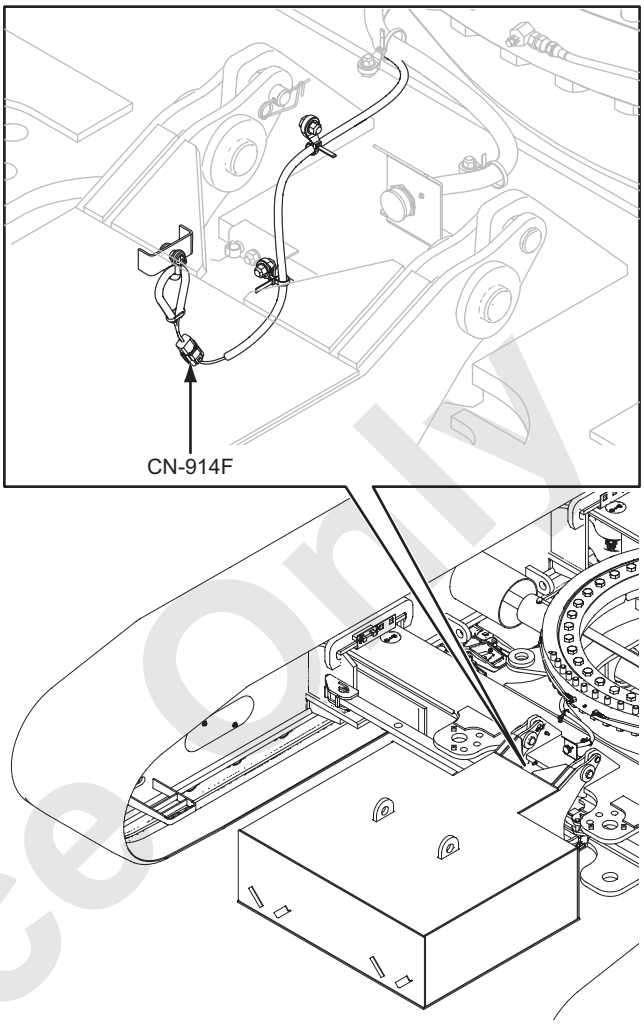

- When setting the LMI, ensure to select the item matched with the actual weight configuration.
  If wrong item is selected, an error [ML-ME064] will appear on the monitor and buzzer will sound.

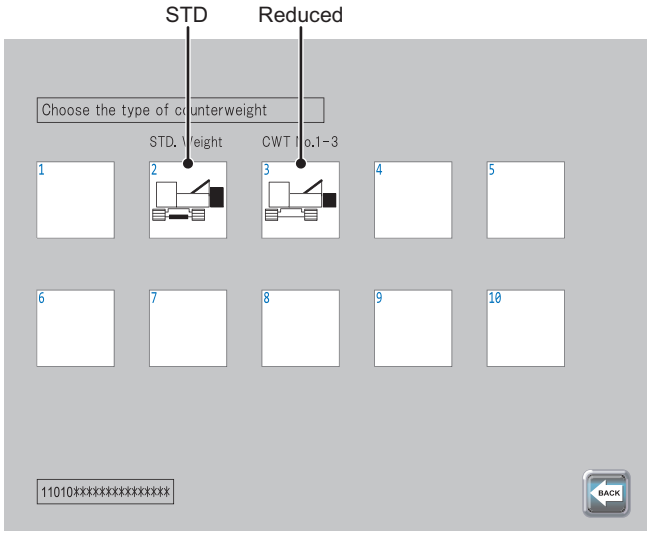

Note

In case the carbody weight is not equipped as reduced weight specification, leave the base machine harness with cap as is.

Reference Only

4.7.2 CARBODY WEIGHT REMOVAL

DANGER

Do not enter under the weight or stand between the weight and surrounding object.
Failure to observe this precaution may result in a serious injury or loss of life.

1. Preparation of carbody weight removal

(1) This machine's carbody weight is composed of two pieces.

EACH WEIGHT MASS

Carbody weight	Weight
Weight (1)	7.2 t (15,873 lbs)
Weight (2)	7.2 t (15,873 lbs)

(2) Before removing the carbody weight, check that the machine is in the following conditions.

- Gantry : Work position
- Ground : Firm and level
- Crawlers : Extended

WARNING

As to the stability in swing and traveling to avoid the machine turnover, refer to the article "4.1 SWING AND TRAVEL STABILITY".
Failure to observe this precaution may result in a serious injury or loss of life.

(3) When installing or removing the carbody weight, prepare the tools as listed below.

TOOL

- Attached tool set
- Assist crane 25 t (55,120 lbs) capacity
- Sling wire rope
  25 mm dia. (2-15/16″ dia.) × 8 m (26′) × 2
- Shackle 10 t (22,050 lbs) × 2

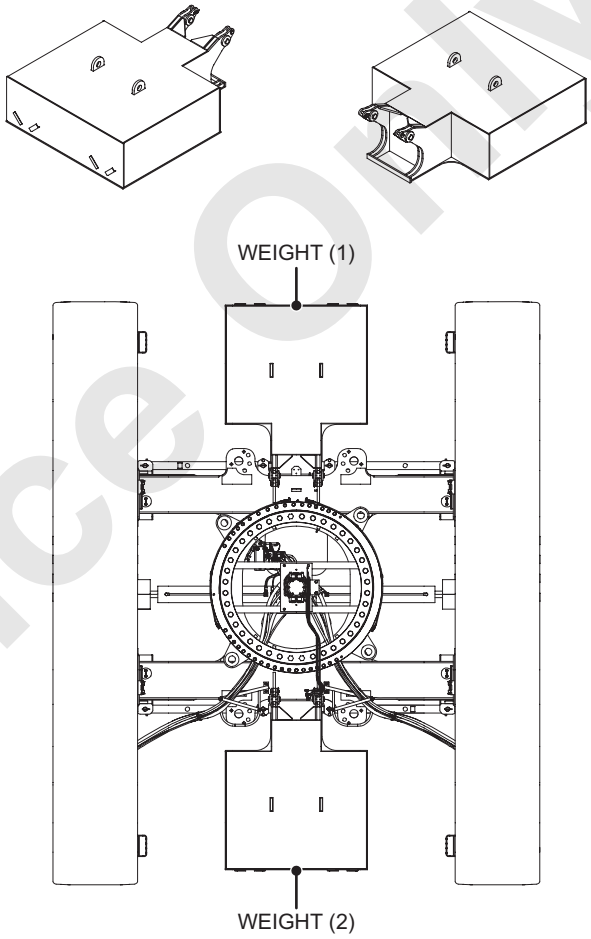

Reference Only

2. Carbody weight removal

(1) For the model equipped with weight detect harness (CN-914F) at the front side of the main machinery, disconnect the harness and apply the waterproof caps on both weight and the main machinery sides.

Note

In case the carbody weight is not equipped as reduced weight specification, leave the base machine harness with cap as is.

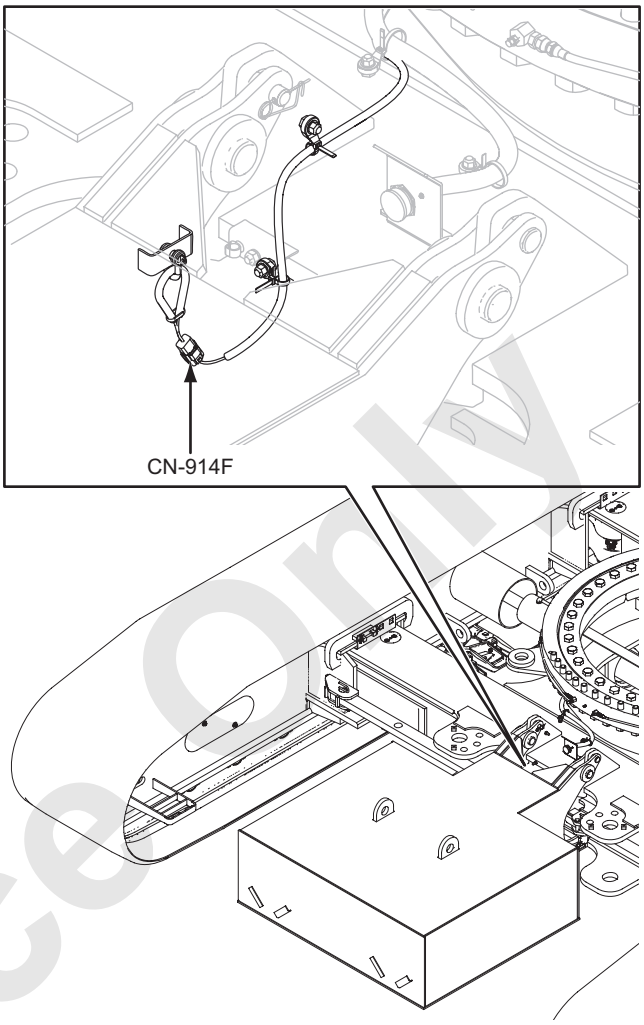

Reference Only

(2) Remove the carbody weight securing pin and secure the pin with spring pin.

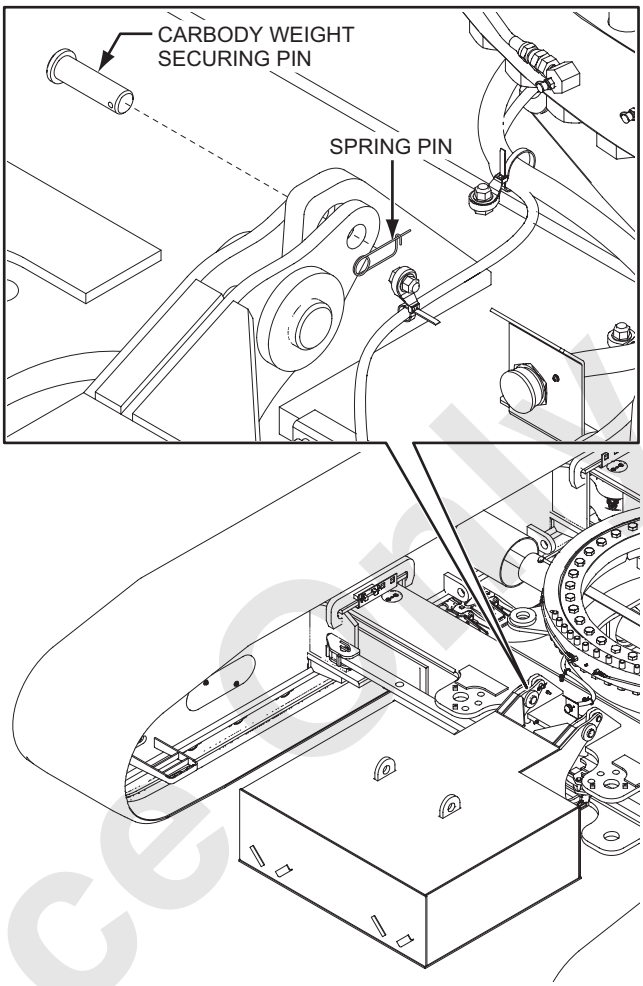

WARNING

Do not insert finger or hand into a pin hole when aligning, inserting or removing pin.
Failure to observe this precaution may result in a serious injury or loss of life.

(3) Lift the carbody weight with an assist crane and detach from the carbody side hanging bracket.

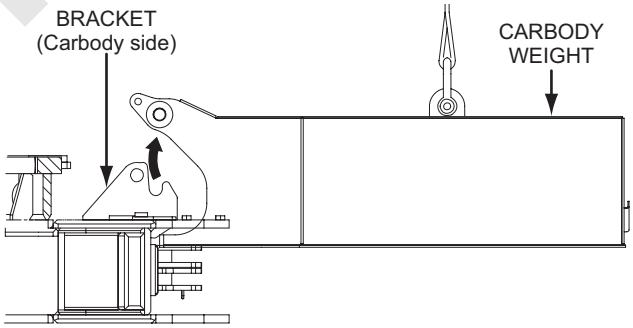

DANGER

Do not enter under the weight or stand between the weight and surrounding object.
Failure to observe this precaution may result in a serious injury or loss of life.

(4) Remove the carbody weight (2) as same manner as carbody weight (1).

Reference Only

4.8 SELF REMOVAL CYLINDER (OPTION) INSTALLATION/ REMOVAL

This article is to explain the installation method of self removal cylinder to the boom base, although the transportation can be made with cylinder equipped.

1. Place the cylinder on the stable wooden block.

2. Connect the cylinder head to cylinder hanging bracket with the securing pin and secure with washer and split pin.

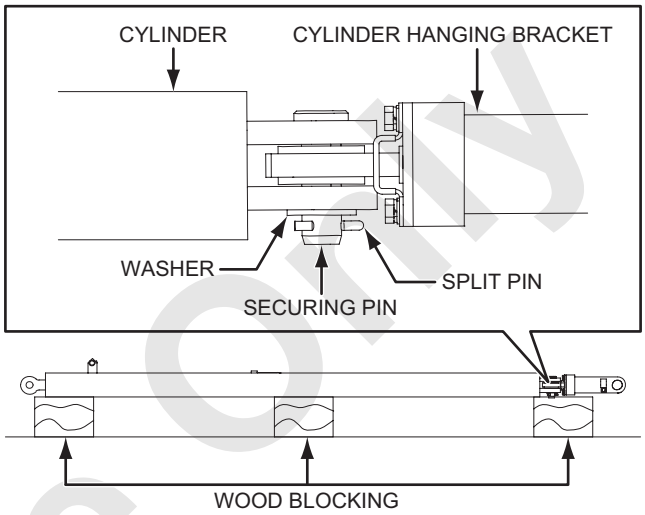

3. The securing pin and spring pin for cylinder storage to be leave as is.

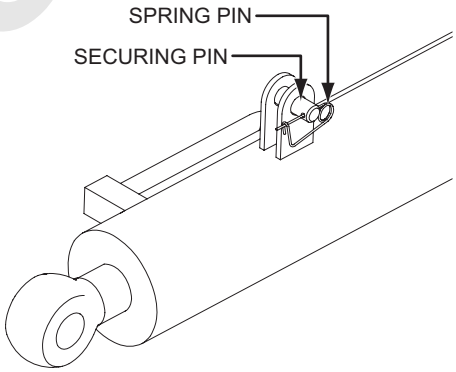

4. Travel the base machine to meet the self removal cylinder hanging bracket and its installation part on the boom base tip.

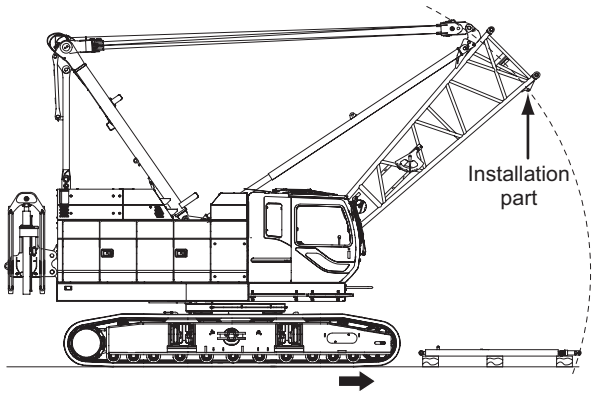

Reference Only

5. Lower the boom base and connect the self removal cylinder hanging bracket and its installation part with the securing pin, washer and split pin (2 locations on the left and right)

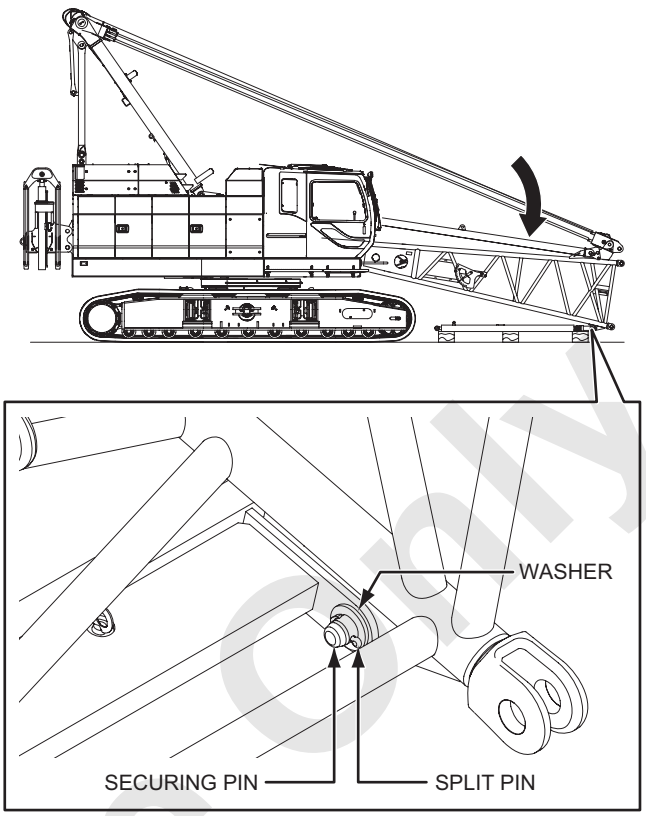

6. Attach a link on the bracket for cylinder storage.

7. Install the assembled cylinder storage bracket with the U-bolts, washers and nuts to the boom base near the cable reel.

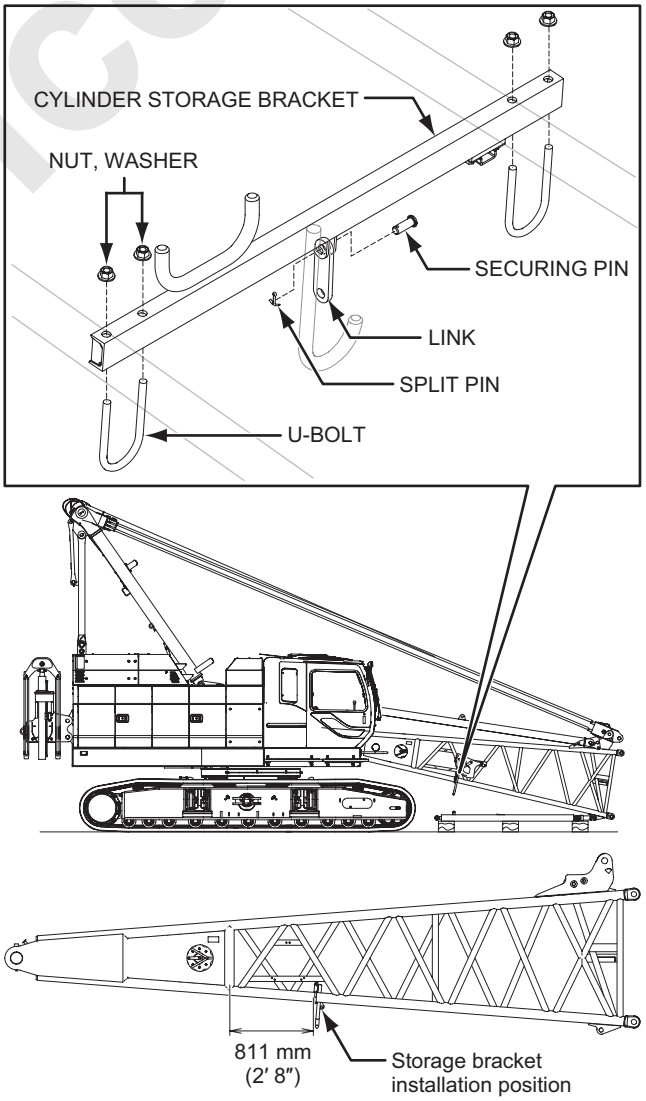

Reference Only

8. Connect two hydraulic hoses between the valve on the boom foot area and cylinder.

9. Clamp the hoses to the cylinder securing bracket and boom base.

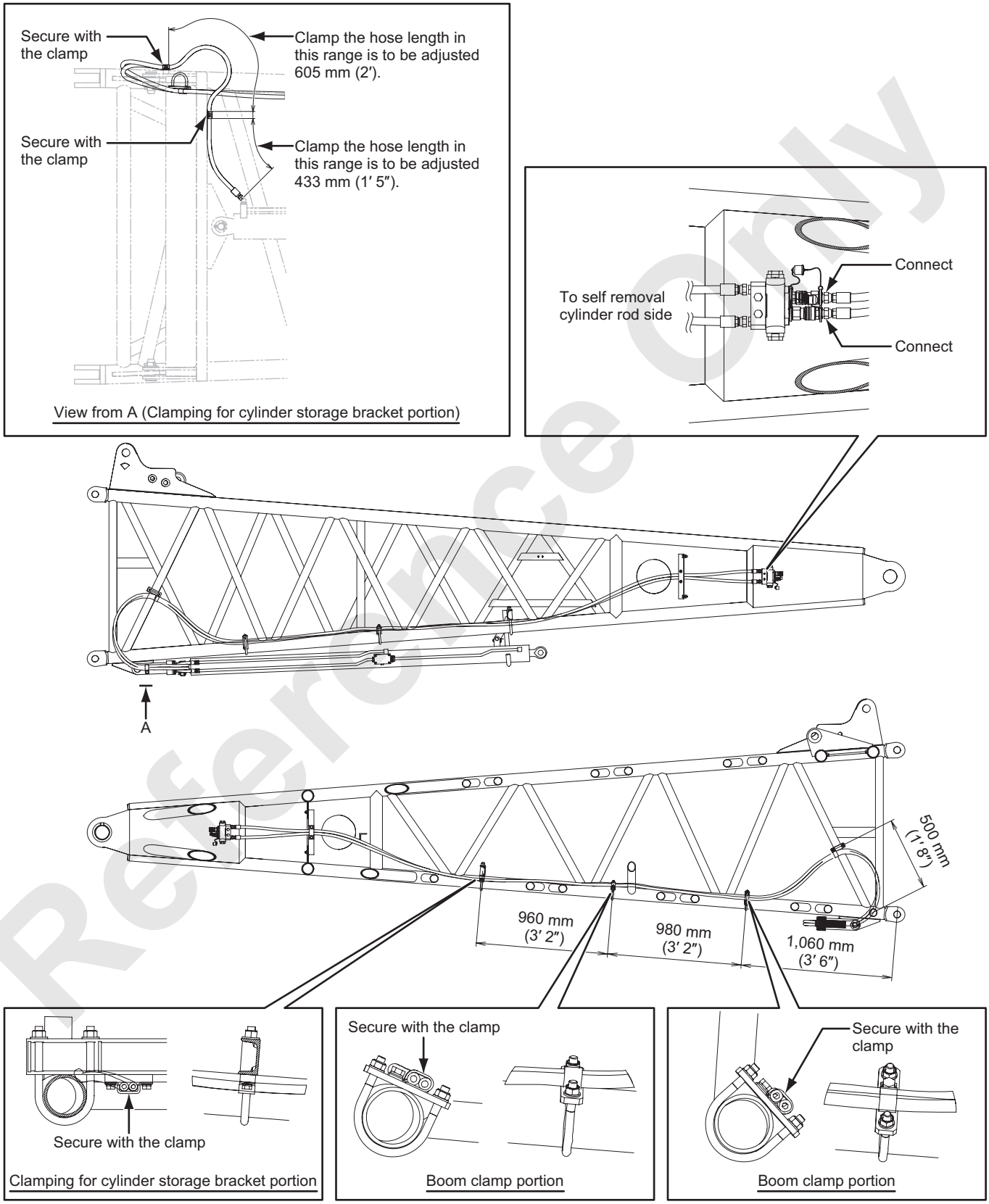

Reference Only

10. Connect 2 hydraulic hoses from the base machine to the valve on the boom foot portion.

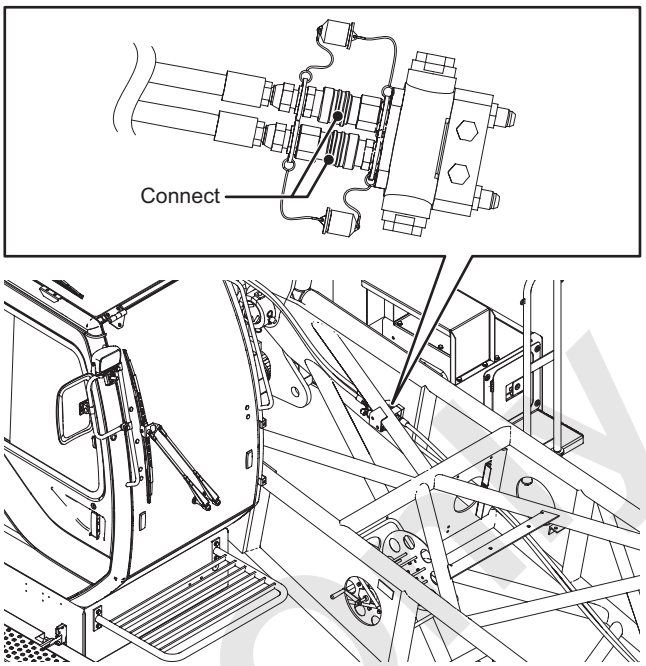

11. Raise the boom base slowly.

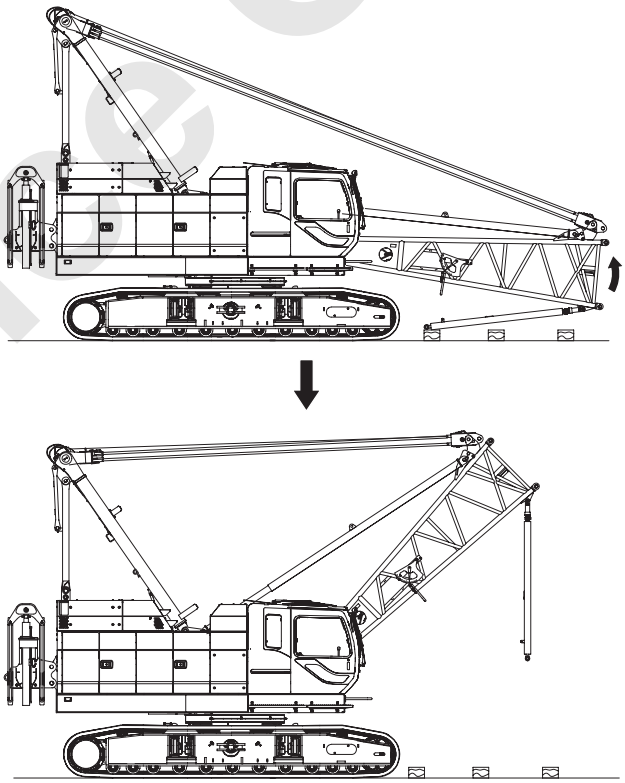

12. The removal of the cylinder is to be performed as reverse order as installation.

Reference Only

4.9 SELF REMOVAL CYLINDER (OPTION) TAKEOUT/STORAGE

4.9.1 TAKEOUT OF CYLINDER

1. Connect two hydraulic hoses from the base machine to the valve on the side of boom foot.

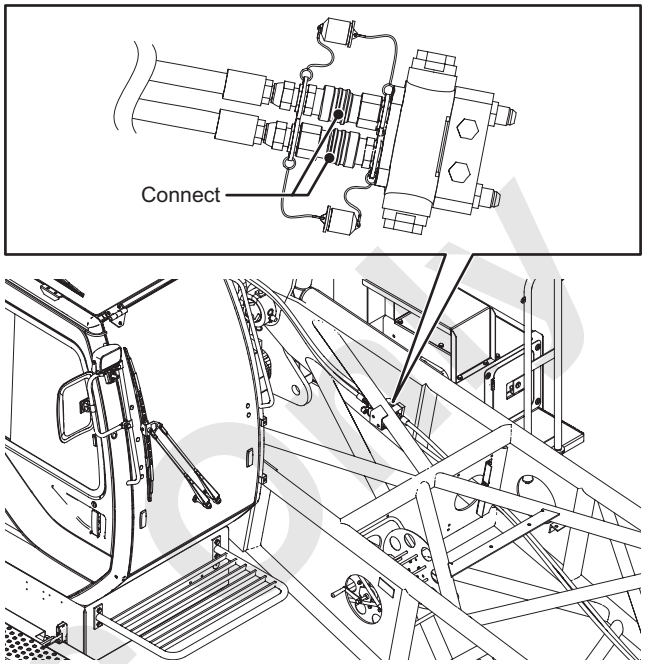

Reference Only

2. Remove the link and securing pin and spring pin for secure the cylinder.
   The securing pin and spring pin are to be reinstalled to cylinder side pin hole.

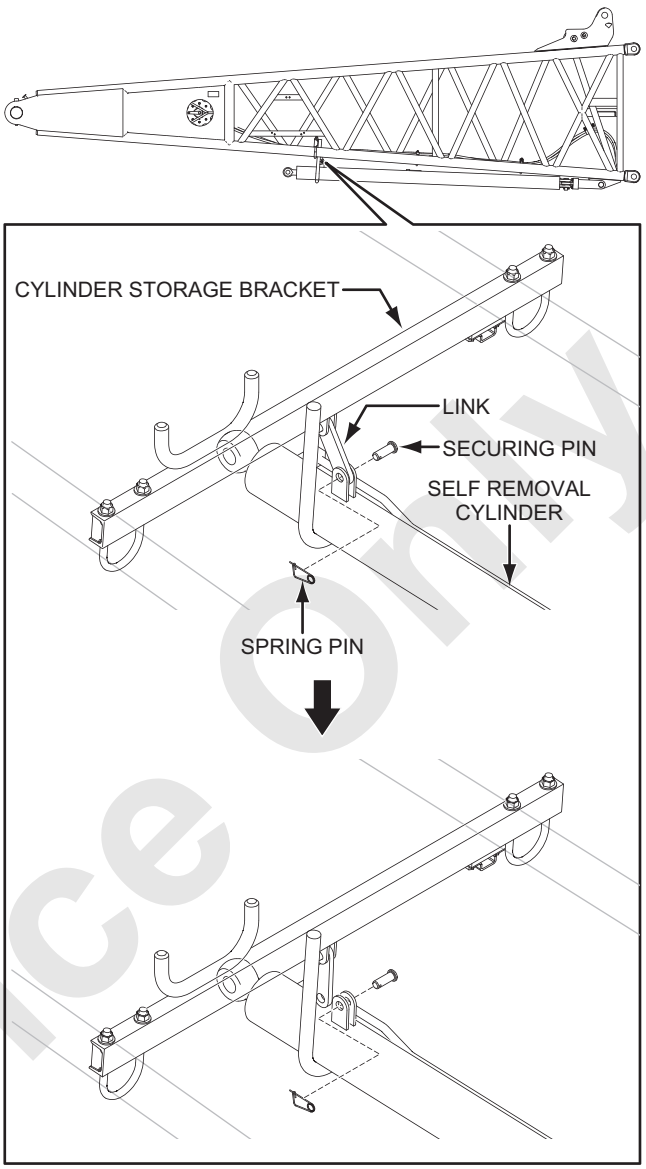

Reference Only

3. Raise the boom base up to 84 degrees.

4. Manipulate the self removal cylinder control switch in the operator's cab and extend the cylinder.

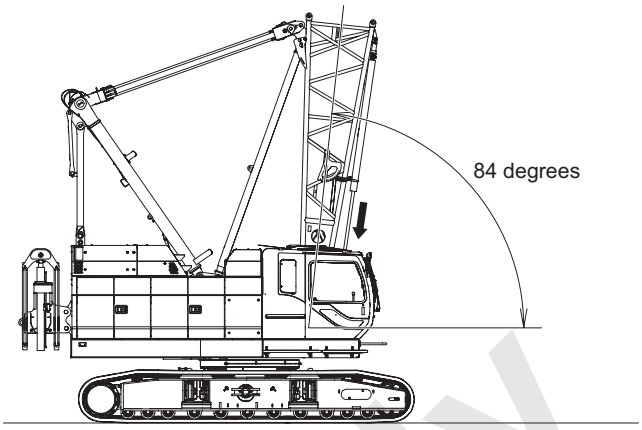

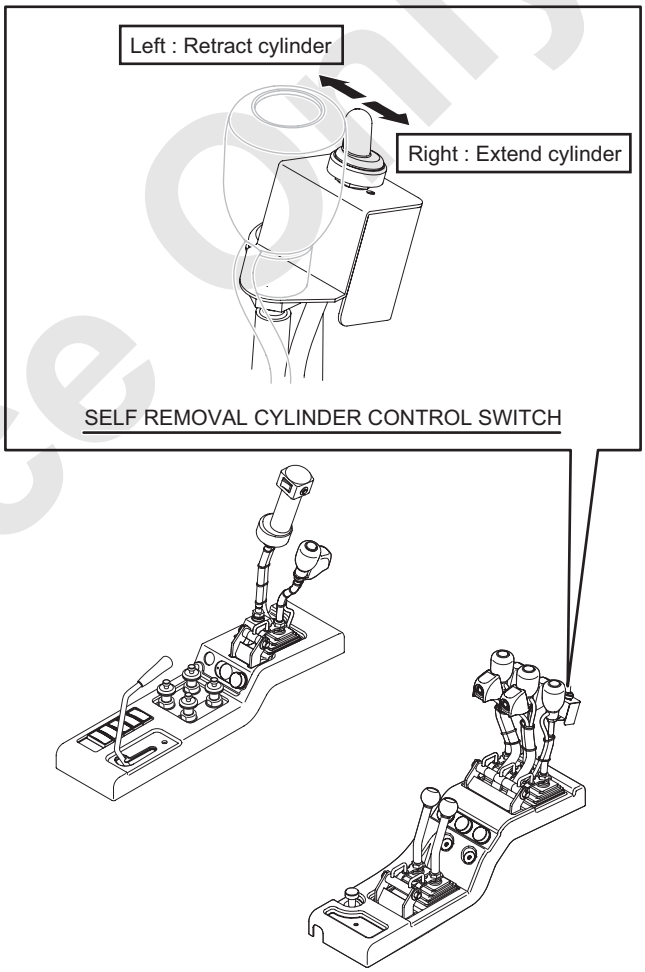

Reference Only

5. Hold the end of cylinder rod and take off from the storage hook.

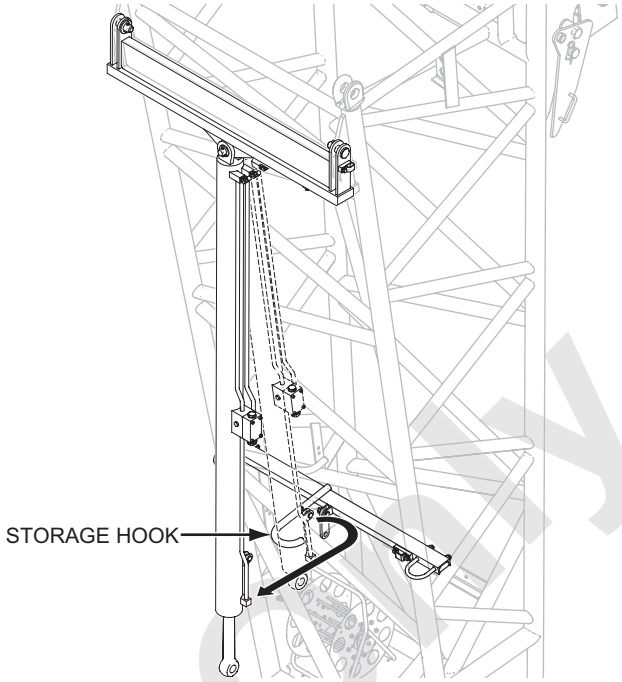

CAUTION

While removing the cylinder, extra care for unexpected movement.
Failure to observe this precaution may result in a serious injury.

6. Lower the boom base to approximate 50 degrees and manipulate the control switch in the operator's cab to retract the cylinder.

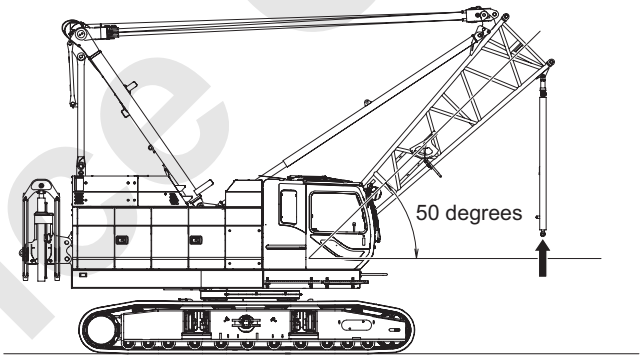

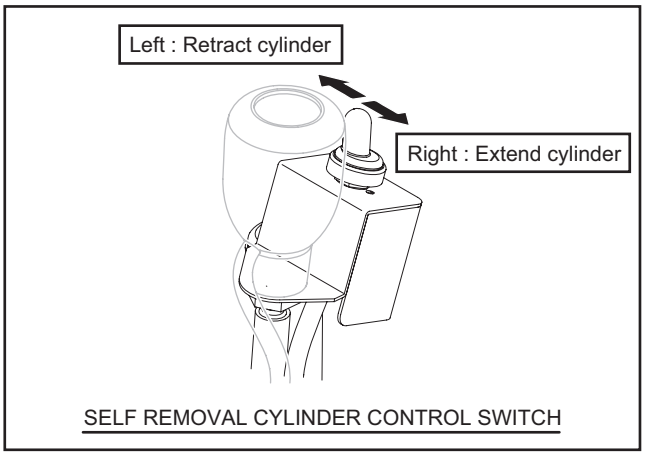

Reference Only

4.9.2 STORAGE OF CYLINDER

1. Raise the boom base up to 84 degrees.

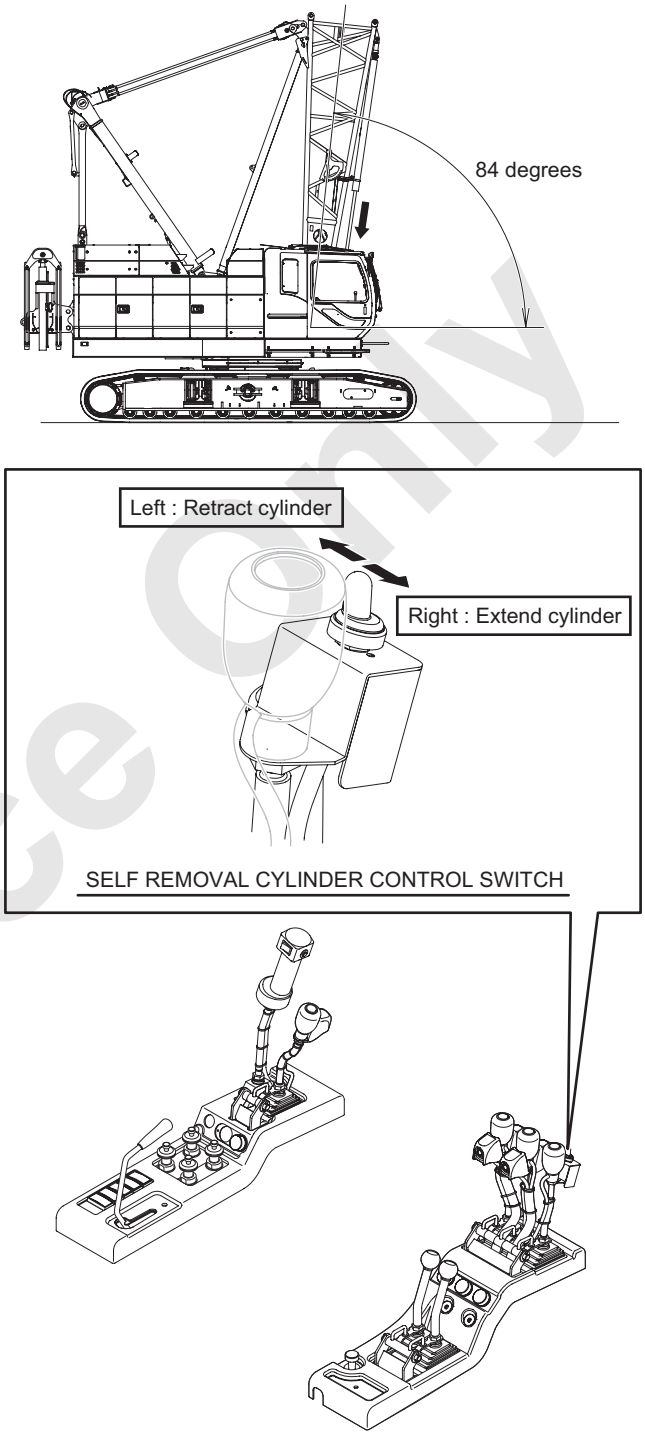

Reference Only

2. Extend the self removal cylinder and hold the end of cylinder and hang to the storage hook.

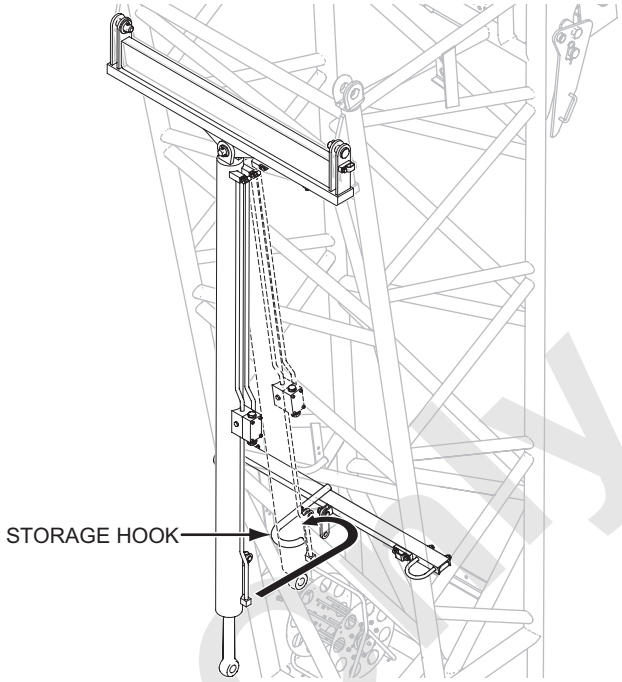

3. Manipulate the self removal cylinder control switch in the operator's cab and retract the cylinder.

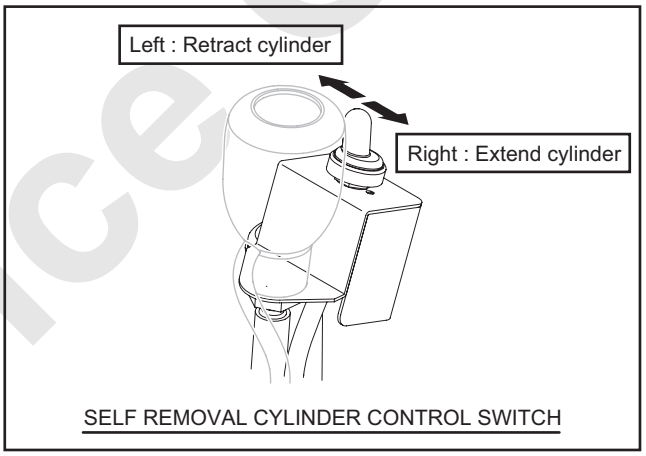

Reference Only

4. Lower the boom base.

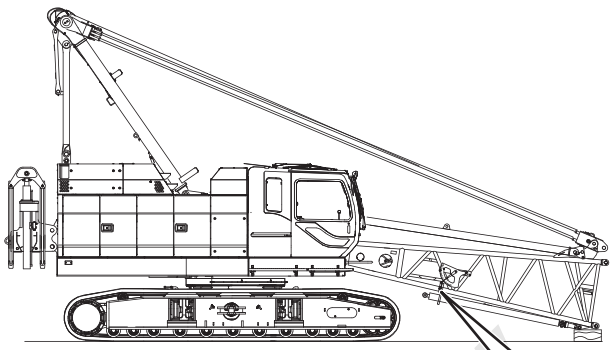

WARNING

Do not lower the boom with the extended cylinder. The cylinder may interfere with the carbody. Failure to observe this precaution may result of damaging the cylinder.

5. Insert the securing pin when align the hole for the link and self removal cylinder side.
   Insert the spring pin to the securing pin.

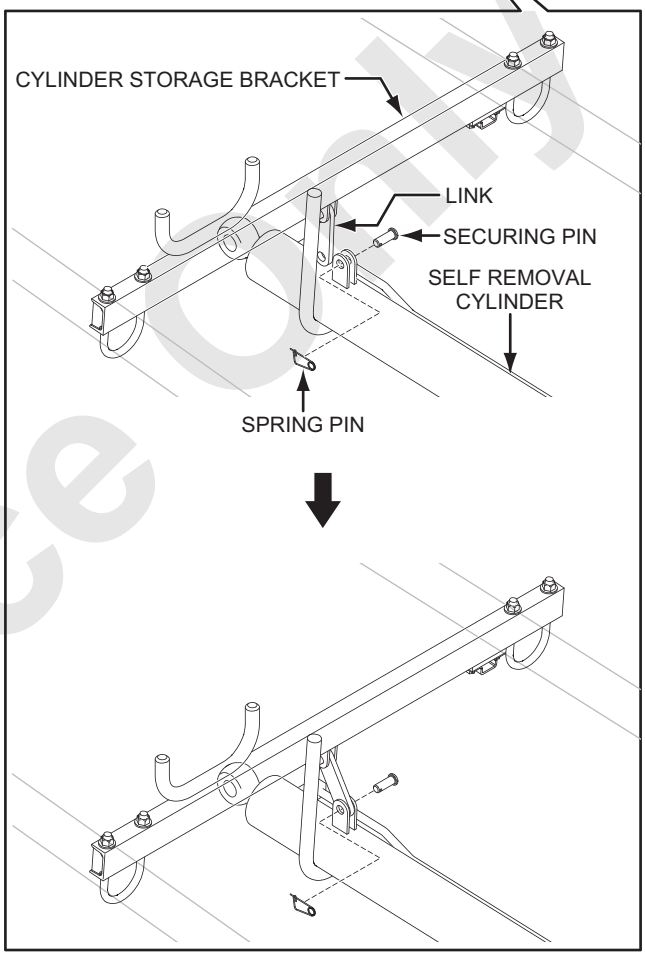

6. Store the hoses as shown.

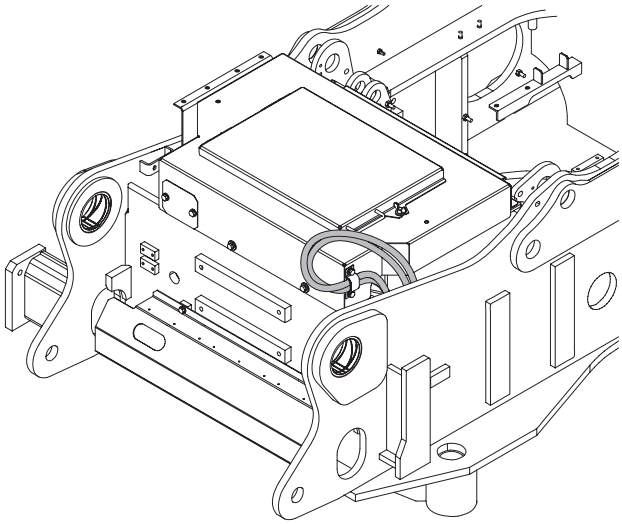

Reference Only

4.10 CRAWLER INSTALLATION/REMOVAL (USING SELF REMOVAL CYLINDER [OPTION])

4.10.1 INSTALLATION OF CRAWLER

Installation method of crawler has 2 ways, one is use of self removal cylinder and other is use of assist crane.
As occasion, carry out the assembly with the safer way.

1. Preparation of crawler installation

TOOL

- Translifter
- Attached tool set
- Corner protectors
- Shackle 10 t (20,050 lbs)
- Shackle 5 t (11,025 lbs) × 4
- Sling wire rope
  16 mm dia. (20/32″ dia.) × 1.5 m (7′) × 4

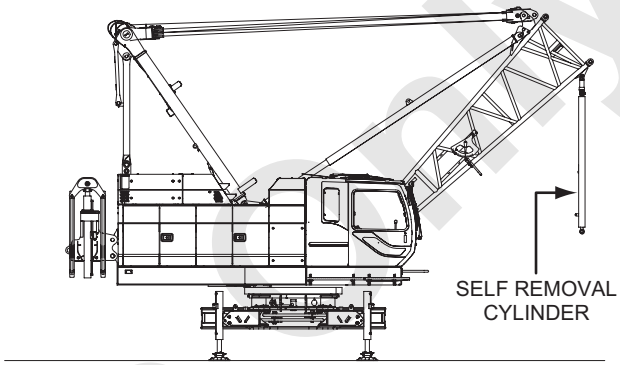

DANGER

When the translifter is to be used, set the machine on the level and firm ground. When the translifter is used on inclined or soft ground, a serious accident such as overturning of the machine or damaging the translifter may be caused.
Failure to observe this precaution may result in a serious accident.

DANGER

When the translifter is to be used, remove the counter weights and carbody weights.
If the translifter is used with these weights, the machine turnover or damage the translifter may be caused.
Failure to observe this precaution may result in a serious accident.

Reference only

DANGER

Ensure the translifter must be secured at work position for working.
If secured it for transportation position lead to turn-over while swinging.
Failure to observe this precaution may result in a serious accident or loss of life.

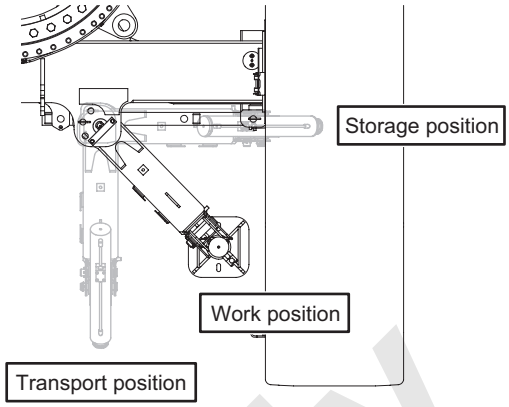

WARNING

Check if there is any abnormality on the ground condition of the float contacting area to prevent overturning of the machine.
Failure to observe this precaution may result in a serious accident.

WARNING

- **After contacting the float to the ground, the vertical cylinder can be able to control one by one.**
- **To avoid the turnover of the machine, keep the machine horizontally with monitoring a leveler while translifter is in operation.**
  Failure to observe this precaution may result in a serious injury or loss of life.
- **Ensure all four floats should be contacting with the ground evenly.**

WARNING

To prevent overturn of the base machinery, ensure to engage the swing brake and lock when handling the translifter.
Failure to observe this precaution may result in a serious accident.

Reference Only

(1) Swing the upper machinery to right angle against traveling direction to install the crawler and secure the swing lock and brake.

(2) Rotate the axle extension toward to extended direction. (All 4 locations)

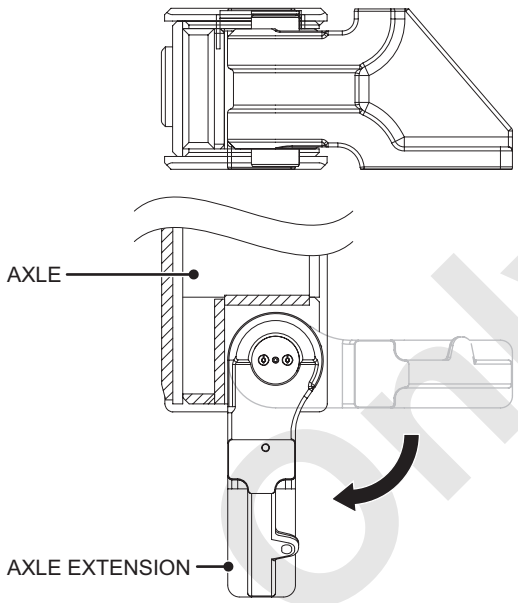

(3) Install the rotation preventive bracket after the axle extension is extended position.

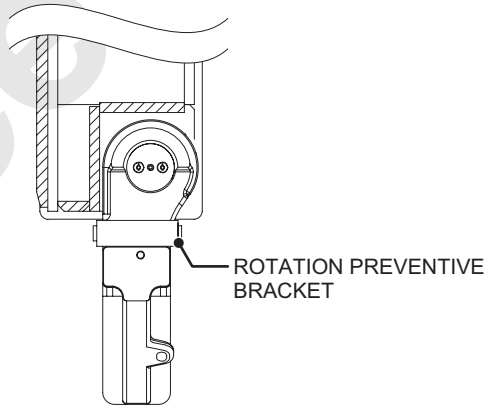

Reference Only

(4) Adjust the road clearance to approx. 600 mm (2 ft.).
Confirm and adjust the level with the leveler whether the lower machinery is horizontal.

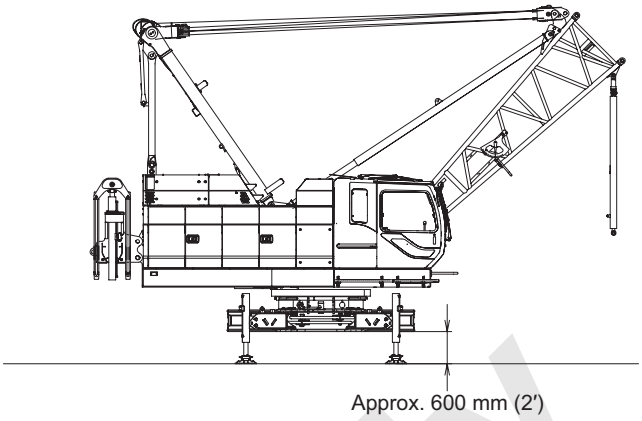

DANGER

Do not swing when connecting or disconnecting hydraulic hose of crawler to avoid accident of being caught.
Failure to observe this precaution may result in a serious injury or loss of life.

WARNING

- **After contacting the float to the ground, the vertical cylinder can be able to control one by one.**
- **To avoid the turnover of the machine, keep the machine horizontally with monitoring a leveler while translifter is in operation.**
  Failure to observe this precaution may result in a serious injury or loss of life.
- **Ensure all four floats should be contacting with the ground evenly.**

Reference Only

(5) In case of the crawler connecting link is not installed on the carbody, insert the link to the carbody and set to the fully retracted position. Insert the guide pin then secure with the spring pin.

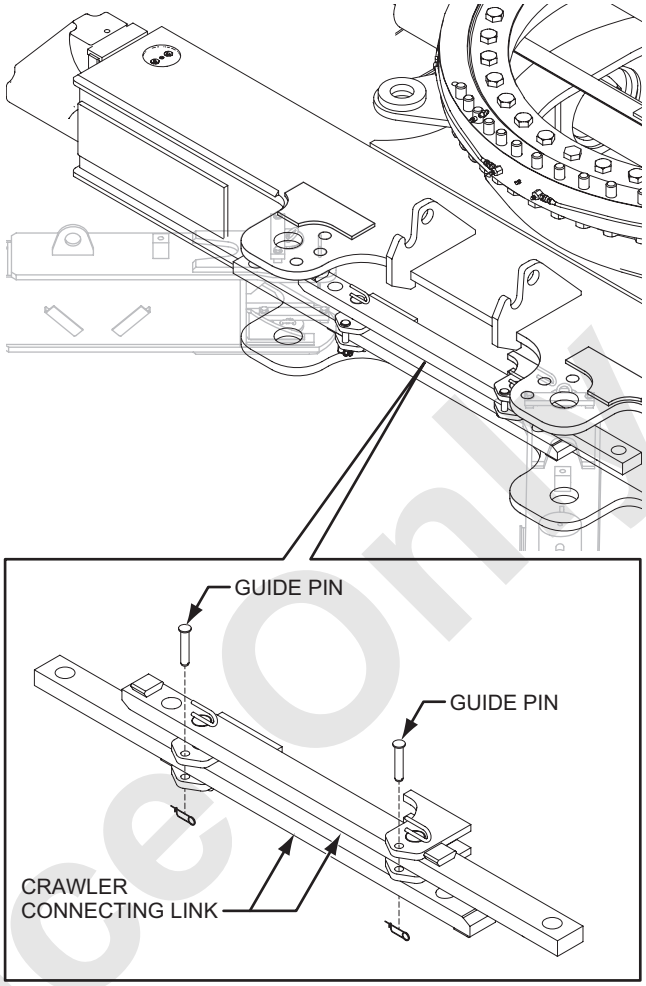

(6) In order to sliding smoothly, apply grease on the axle sliding surface. (4 locations)

Note

Apply the molybdenum disulphide grease to the axle.

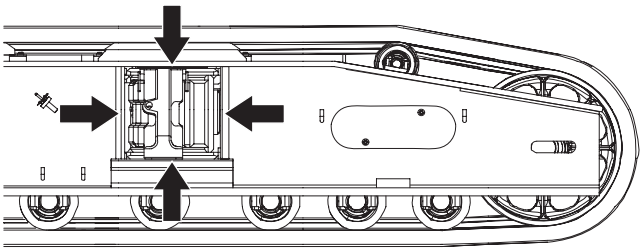

Coat the grease on the sliding surface of axle.

Reference Only

2. Setting of LMI

When removing or installing the crawler, set up the LMI as the following.

Note

Unless the setting of load safety device, the auto-stop function will be works and the machine would not be operated.

(1) Press MENU icon on the main screen to display the menu.

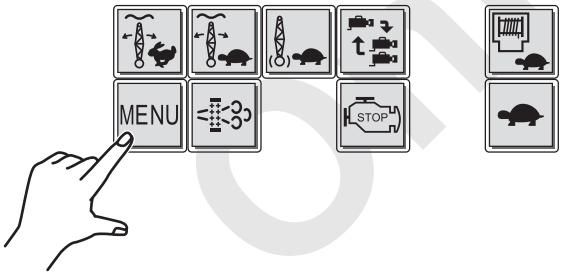

(2) On the selected screen, press icon.

(3) Crane attachment select screen is displayed. Select “9 (Self removal cylinder)”.

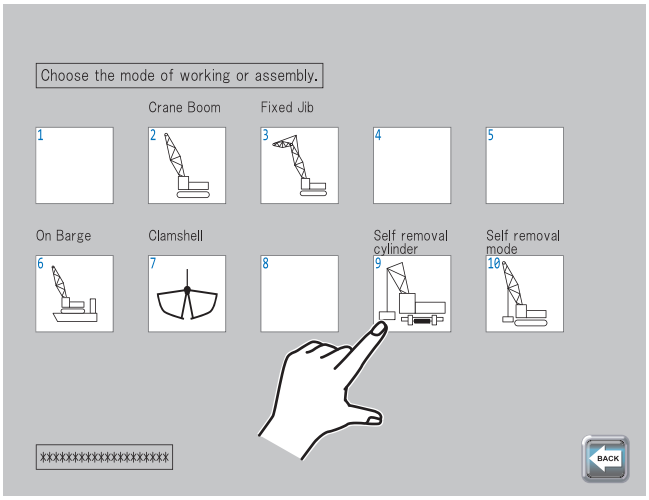

Reference Only

(4) The operation select screen is displayed.
Select “2 (Crawler removal mode)”.

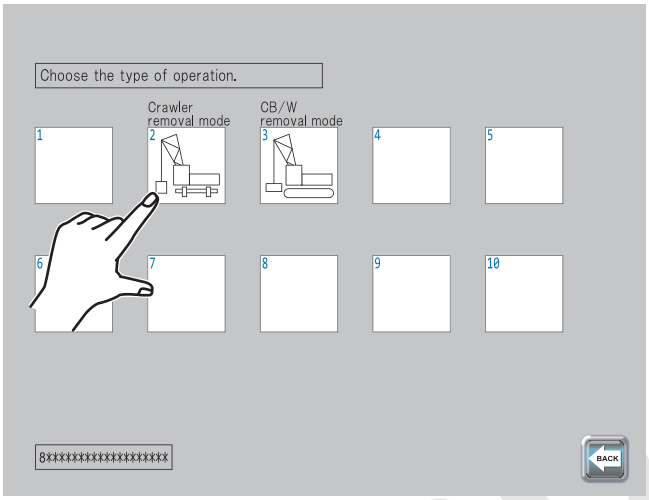

(5) Press SET.

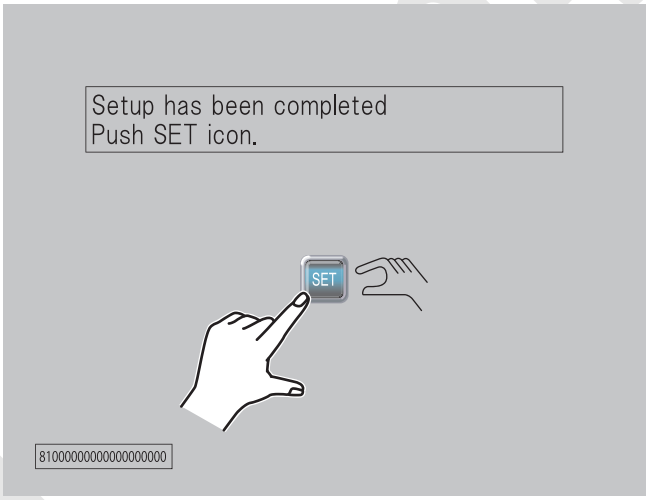

(6) Data is being loaded.

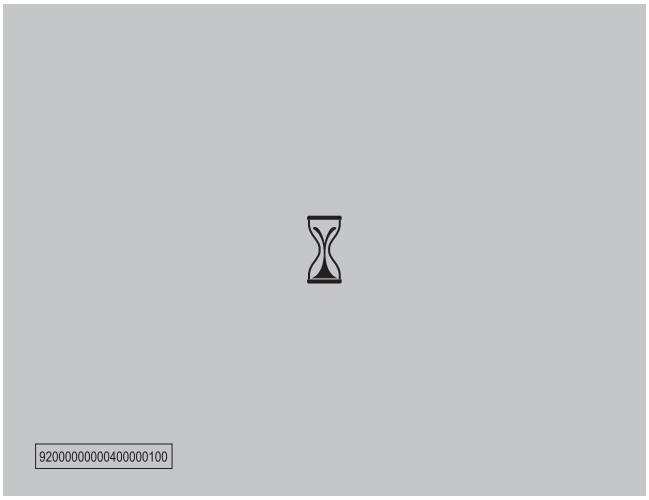

Reference only

(7) After data is loaded, the result of selection is displayed.
Check if the selected items are correct.

- If correct, press OK.
  The screen returns to the main screen.
- If not correct, press to restart the input.

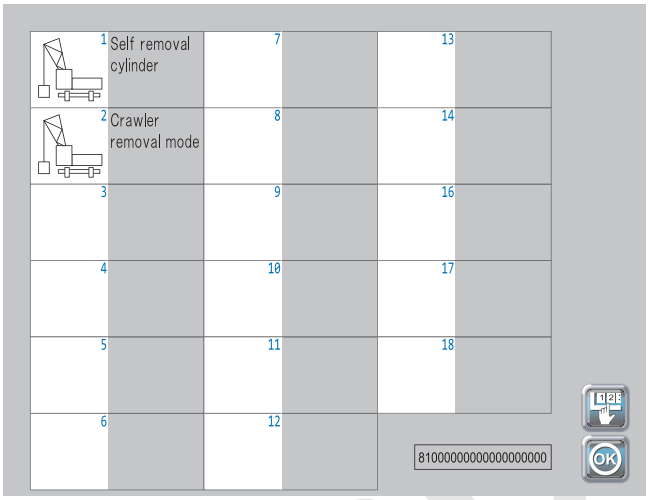

Note

In case the selection is limited to only one choice, select screen is to be neglected and indicates only the result.

Reference Only

3. One side of crawler installation

(1) Bring the trailer loading of the crawler to the base machine as much as closer.
(2) Confirm the installation direction of crawler and lift it by the self removal cylinder.
One side crawler mass : 7,600 kg (16,760 lbs)

- Upon lifting the crawler, use protectors to avoid entering the sling into the gap of shoes.

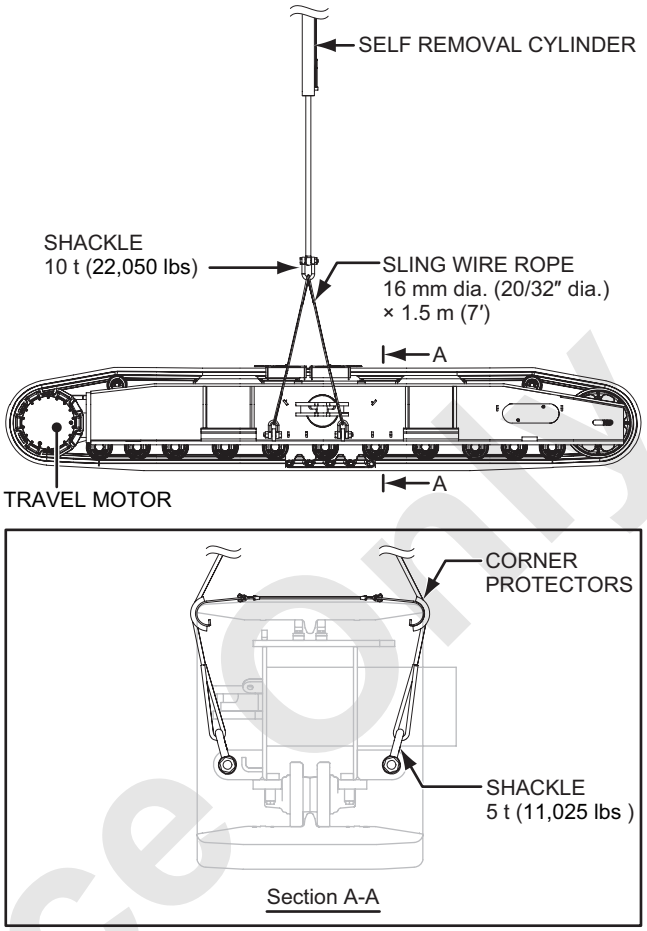

- When the crawler is not installed to the base machine, the upper machinery allowed to rotate 360 degrees with the lifting of crawler by self removal cylinder.

DANGER

Keep the working radius within 4.1 m (13 ft.) while swinging with lifting the crawler by self removal cylinder to prevent overturning of the machine. Failure to observe this precaution may result in a serious accident.

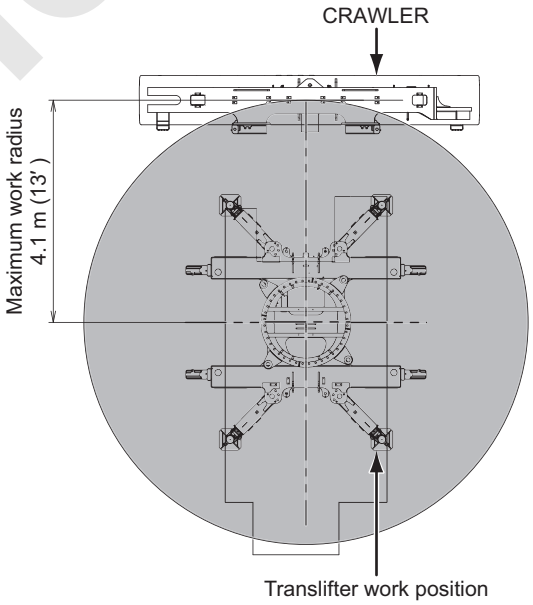

Reference Only

(3) Adjust the crawler installation position with the swing motion slowly.

DANGER

Do not swing abruptly to prevent machine over turning.
Failure to observe this precaution may result in a serious accident.

(4) Confirm not to attach the adjusting shim for axle clearance.
(5) Insert the crawler into both front and rear axle extension by controlling the boom base and self removal cylinder.

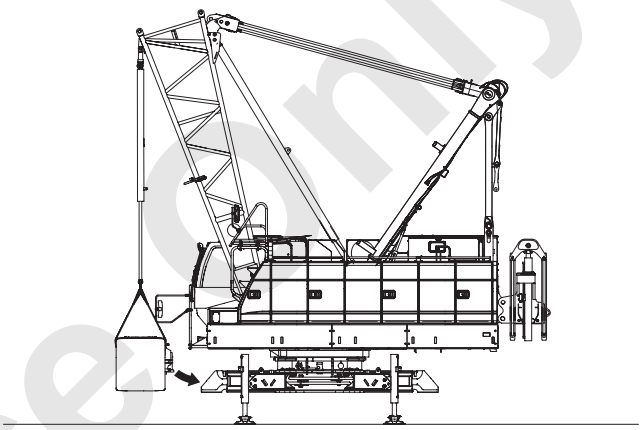

DANGER

Keep out of the spaces under the lifted crawler frame or between the machine and the crawler frame avoid being trapped.
Failure to observe this precaution may result in a serious injury or loss of life.

(6) Remove the securing pin for crawler extension/ retract cylinder on the crawler frame side.
(7) Extend the crawler extension cylinder and align with the crawler frame side hole and the insert securing pin.

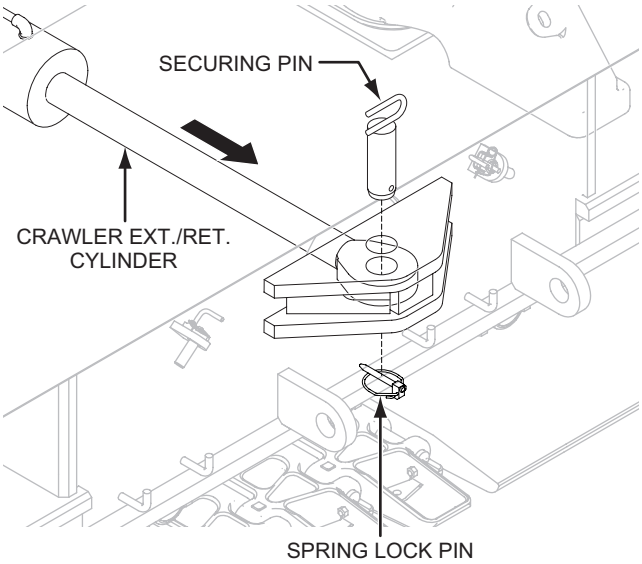

DANGER

Keep out of the spaces under the lifted crawler frame or between the machine and the crawler frame avoid being trapped.
Failure to observe this precaution may result in a serious injury or loss of life.

WARNING

Do not insert finger or hand into a pin hole when aligning, inserting or removing pin.
Failure to observe this precaution may result in a serious injury or loss of life.

Reference only

(8) Control the crawler extension/retract cylinder to pulling in the crawler inside from present position.

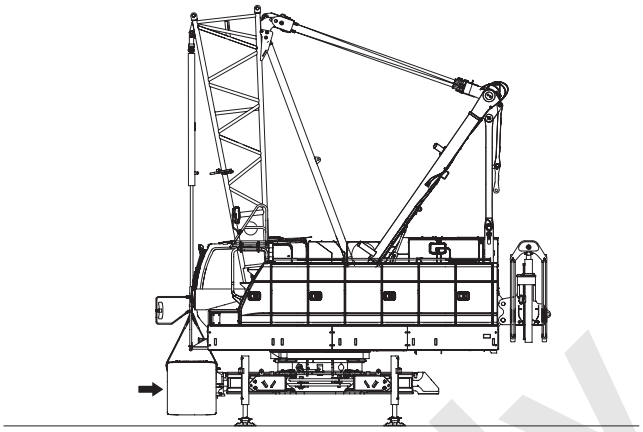

CAUTION

When bring in the crawler frame by Ext./Ret. cylinder, should be the base machine is kept horizontally with the translifter and make a parallel between the side of crawler and side of base machine.
If the crawler is inclined, adjust the vertical cylinder to make a parallel between them.
If leave the incline of crawler and bring in with undue force may cause of damage the crawler frame.

(9) Remove the securing pin (a) from the retract position of the crawler connecting link.

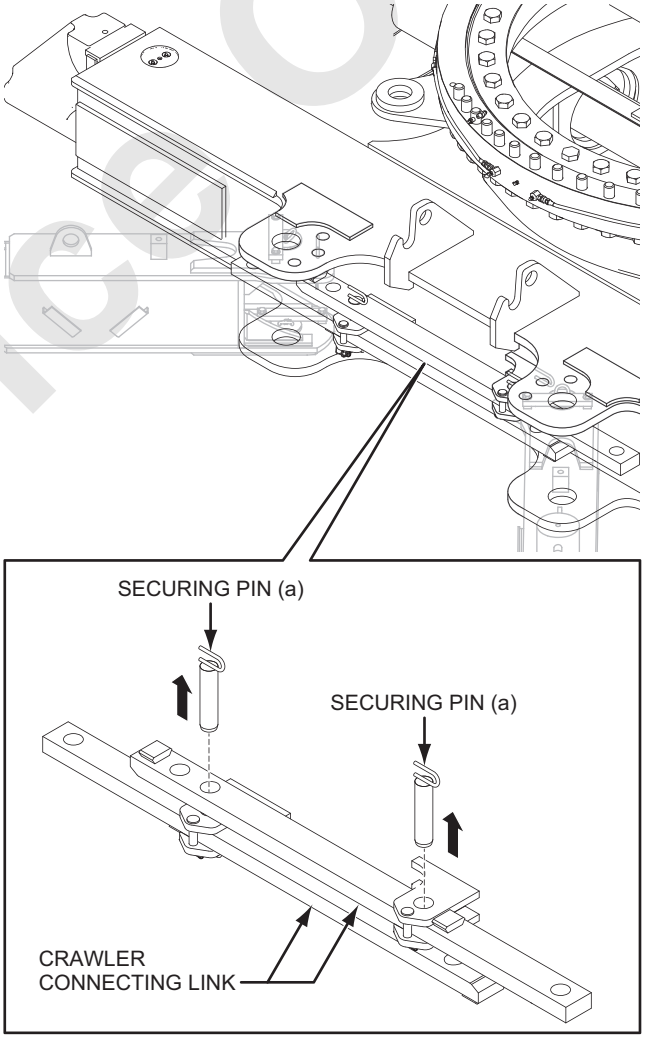

WARNING

Do not insert finger or hand into a pin hole when aligning, inserting or removing pin.
Failure to observe this precaution may result in a serious injury or loss of life.

Reference Only

(10) Extend the crawler connecting link and align with the crawler frame side hole and then insert the securing pin (b) with the spring pin.

WARNING

Do not insert finger or hand into a pin hole when aligning, inserting or removing pin.
Failure to observe this precaution may result in a serious injury or loss of life.

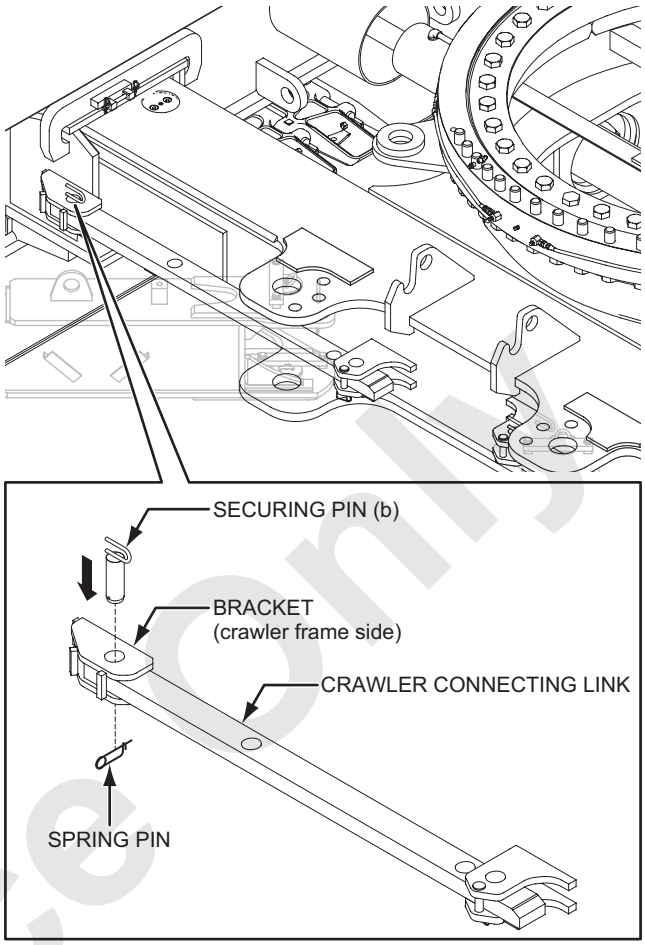

(11) Control the crawler extension/retract cylinder to extend the crawler connecting link fully out.
(12) Insert the securing pin (a) on the carbody side bracket.

WARNING

Do not insert finger or hand into a pin hole when aligning, inserting or removing pin.
Failure to observe this precaution may result in a serious injury or loss of life.

WARNING

Ensure to insert the securing pin (a) at extend position when the crawler extended.
When it is inserted to retract position, the extended width of crawler is not enough resulted the machine may overturn at erection or lifting work.
Failure to observe this precautions may result in a serious injuries or loss of life.

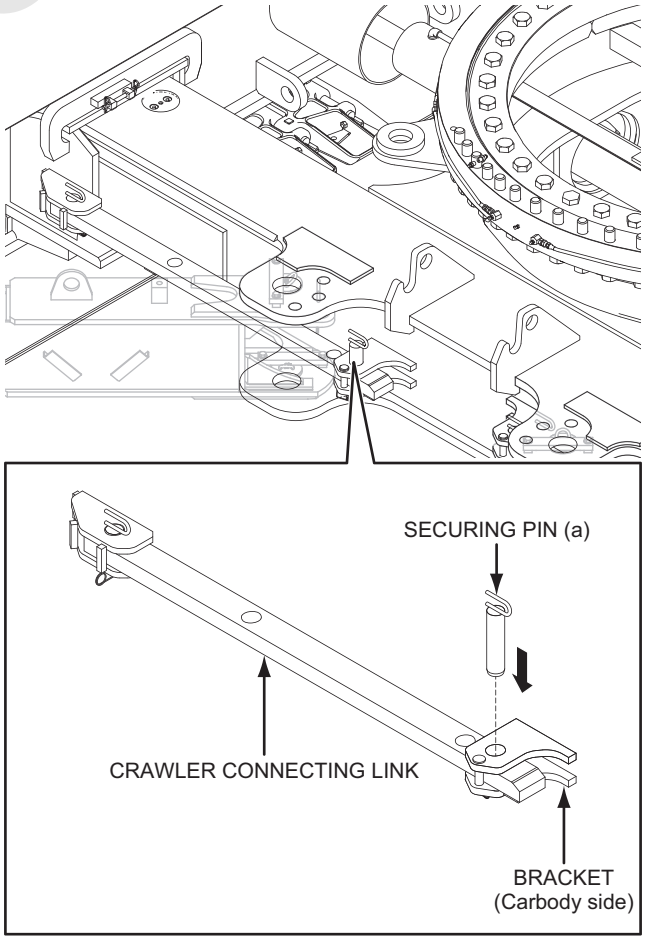

Reference Only

4. Other side of crawler installation

(1) Bring the trailer loading of the crawler to the base machine as much as closer.
(2) Confirm the installation direction of crawler and lift it by the self removal cylinder.
One side crawler mass : 7,600 kg (16,760 lbs)

- Upon lifting the crawler, use protectors to avoid entering the sling into the gap of shoes.

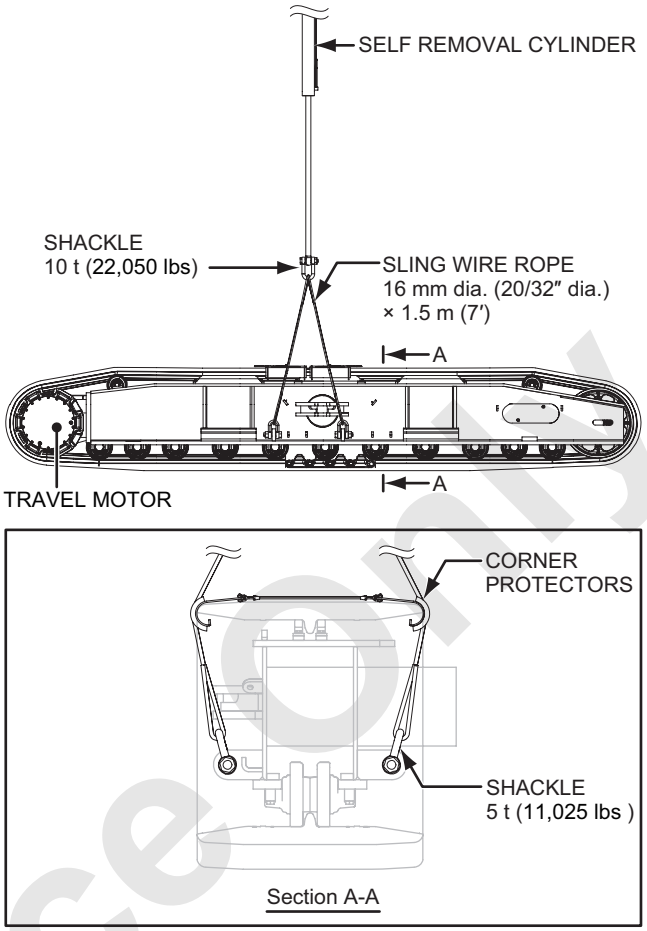

DANGER

Keep the working radius within 4.1 m (13 ft.) and also keep the center to center distance (90 degrees) of lifting side translifter cylinders as well while swinging when one side crawler is installed with lifting the other side of crawler by self removal cylinder to prevent overturning of the machine.
Failure to observe this precaution may result in a serious accident.

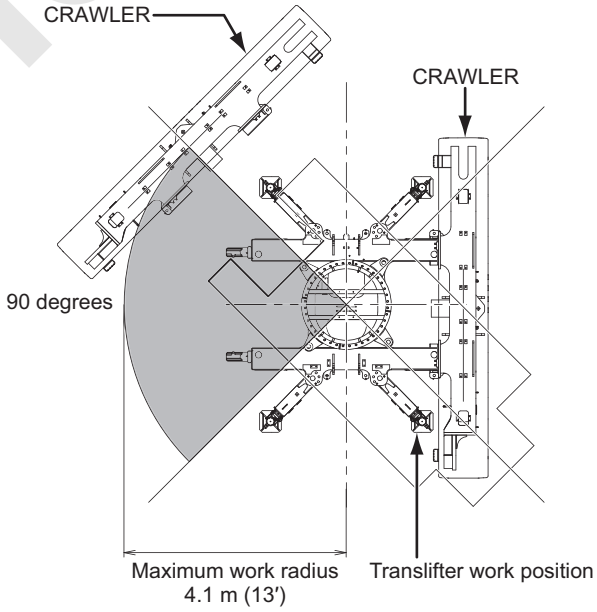

Reference Only

(3) Adjust the crawler installation position with the swing motion slowly.
(4) Install the crawler with the same manner as the previous side of crawler.

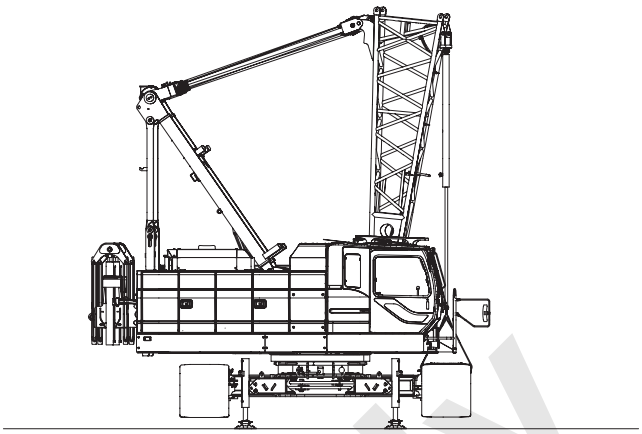

DANGER

Do not swing abruptly to prevent machine over turning.
Failure to observe this precaution may result in a serious accident.

5. Installation of shim

(1) After completion of both crawlers installation, retract the four vertical cylinders with keep the base machine horizontal by monitoring the leveler until the both crawlers are to be placed on the ground.
(2) Swing the upper machinery to widen clearance between the crawler and the axle and install the adjusting shims at four places.
Each shim has a unique number stamped and install it accordingly.

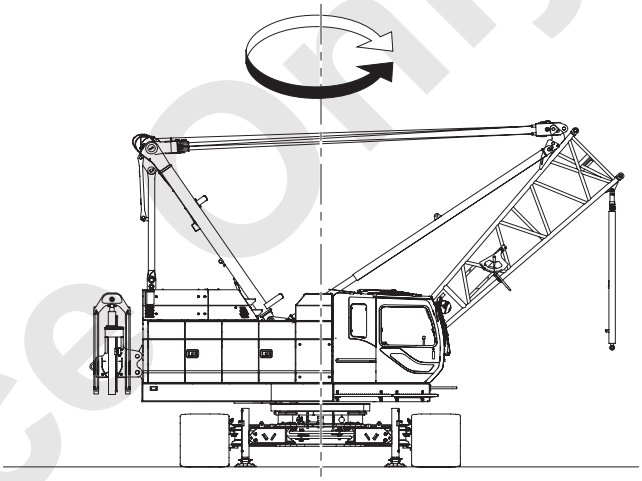

CAUTION

Insert the adjusting shim to all axles.
Otherwise the crawler frame would become misaligned and result in premature shoes or roller wear.
Failure to observe this precaution may lead to damage the parts.

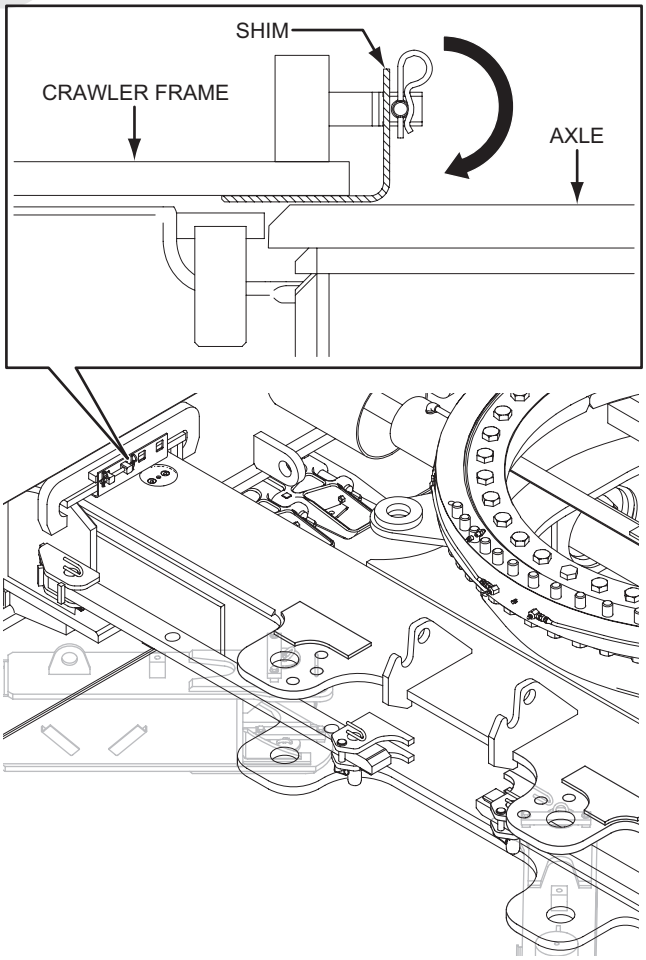

WARNING

Do not insert the finger or hand into the gap between the crawler and axle when installing or removing the shim.
Failure to observe this precaution may result of a serious injury.

Reference Only

6. Remove the securing pin connecting the crawler ext./ret. cylinder and the crawler frame and retract cylinder fully.
   The removed securing pin to be insert the crawler side pin hole and secure with the spring lock pin.

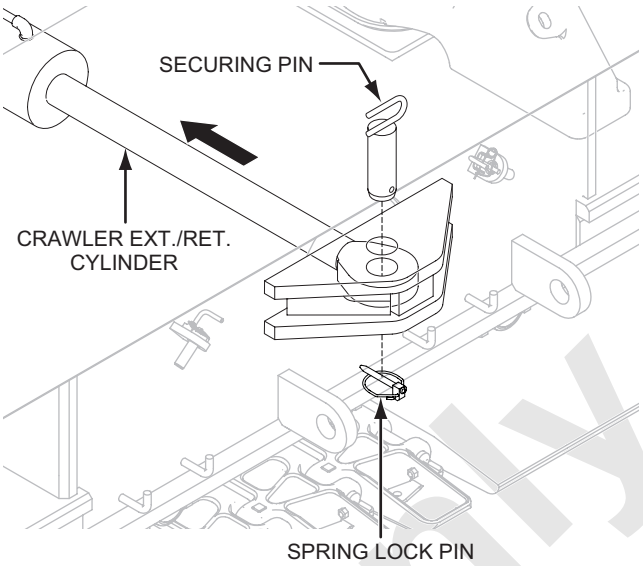

WARNING

Do not insert the finger or hand into the gap between the crawler and axle when installing or removing the shim.
Failure to observe this precaution may result of a serious injury.

CAUTION

The crawler Ext./Ret. cylinder should be kept in full retract position unless the crawler is to be extend or retract.
Otherwise may result in premature damage of cylinder due to sticking of dust/dirt on the sliding part of cylinder.
Failure to observe this precaution may lead to damage the parts.

Reference Only

7. Storage of translifter

(1) If not equipped the carbody weight, the float is to be stored to the place on the translifter
(2) Remove the securing pin for vertical cylinder and tilt the vertical cylinder.
(3) Insert the securing pin when align the securing pin hole for storage.

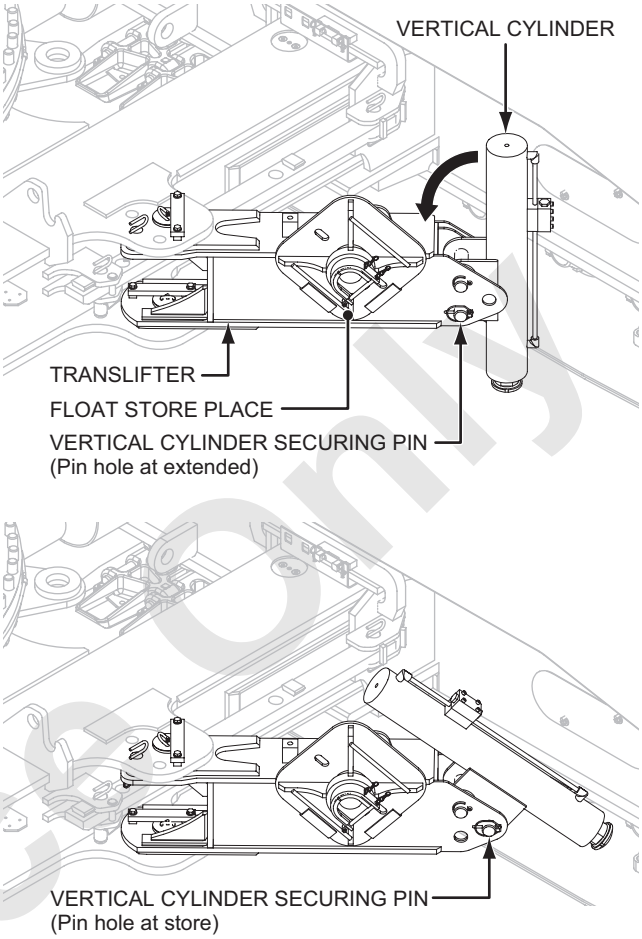

WARNING

Do not insert finger or hand into a pin hole when aligning, inserting or removing pin.
Failure to observe this precaution may result in a serious injury or loss of life.

(4) Stop the engine after completion of all crawler frame installation works.

Reference Only

8. Connection of crawler piping

   Open the cover by removing the fixing bolts.
   Connect both right and left hydraulic hoses for travel at quick coupler portion.
   (4 hoses/one side)
   Confirm if certainly connected by pulling all hoses after connection.

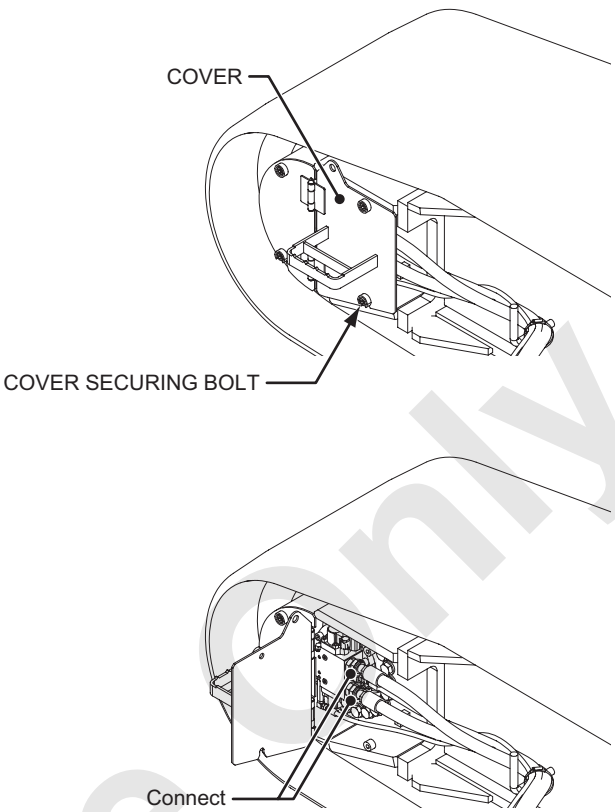

DANGER

Do not swing when connecting or disconnecting hydraulic hose of crawler to avoid accident of being caught.
Failure to observe this precaution may result in a serious injury or loss of life.

CAUTION

- **Perform the connection/disconnection of quick coupler when the circuit pressure is lowered after the engine stop.**
  If the pressure is remained, connection/disconnection would be difficult or oil would spray flies.
- **When connect the quick coupler, remove dirt and dust from both coupling parts.**
  The incomplete connection of coupling may result of oil leak and damage on the travel motor, reduction unit etc.
  Failure to observe this precaution may lead to damage the parts.

Reference Only

4.10.2 REMOVAL OF CRAWLER

There is a case of deleting the translifter, crawler etc. from the illustration to easily visible.

This article is explained of the removal method of both side crawlers using the self removal cylinder from the condition of without counterweight, gantry is in work position and all the piping of translifter are connected.

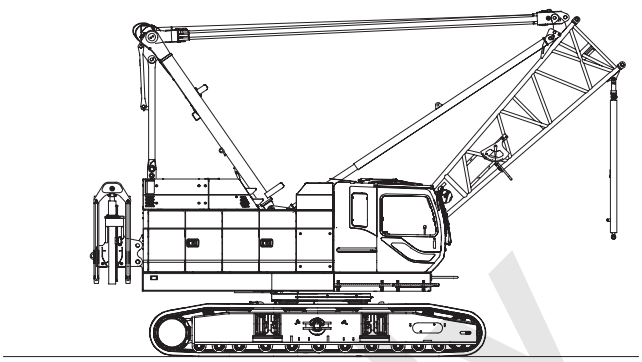

WARNING

- **After contacting the float to the ground, the vertical cylinder can be able to control one by one.**
- **To avoid the turnover of the machine, keep the machine horizontally with monitoring a leveler while translifter is in operation.**
  Failure to observe this precaution may result in a serious injury or loss of life.
- **Ensure all four floats should be contacting with the ground evenly.**

WARNING

To prevent overturn of the base machinery, ensure to engage the swing brake and lock when handling the translifter.
Failure to observe this precaution may result in a serious accident.

Reference Only

1. One side of crawler removal

(1) Swing the upper machinery to widen clearance between the crawler and the axle and remove the adjusting shims at four places on both sides.

WARNING

Do not insert the finger or hand into the gap between the crawler and axle when installing or removing the shim.
Failure to observe this precaution may result of a serious injury.

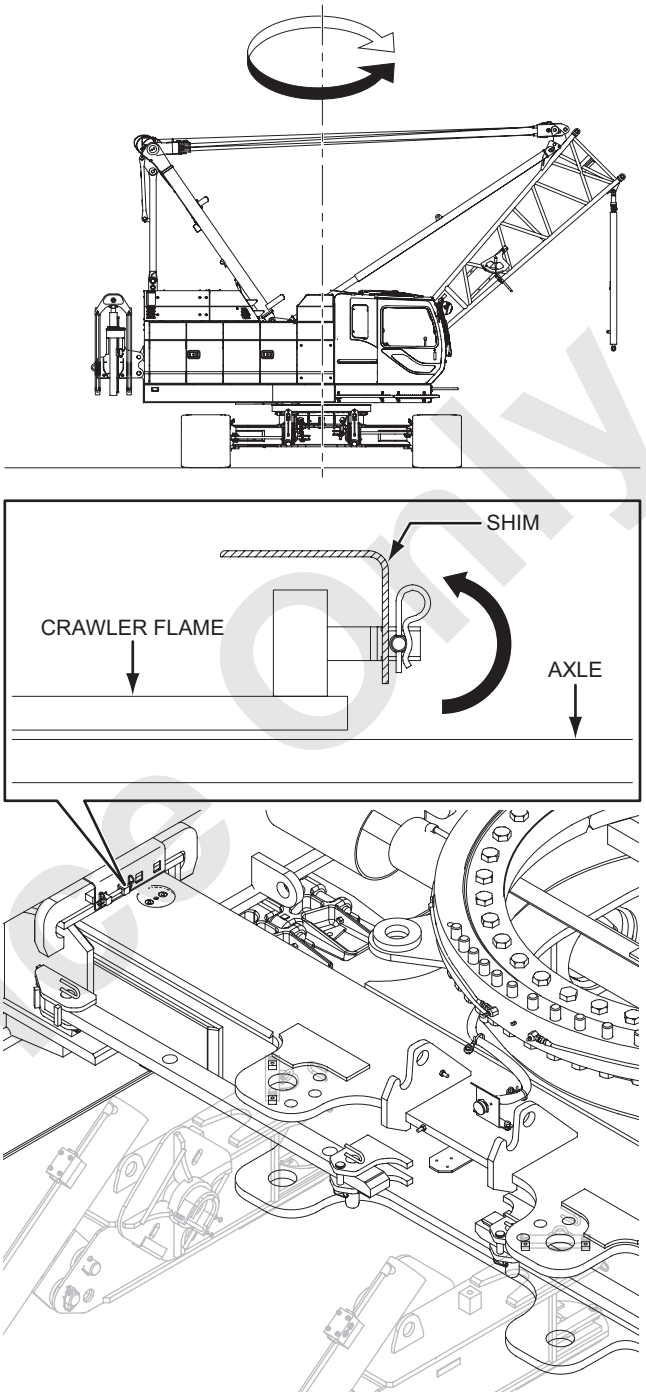

Reference Only

(2) Remove the securing pin for crawler ext./ret. cylinder on the crawler frame side.
(3) Extend the crawler ext./ret. cylinder and align with the crawler frame side hole and the insert securing pin.

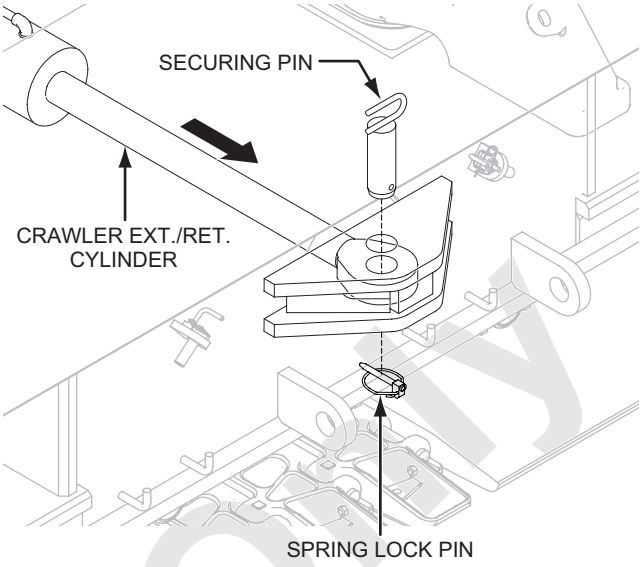

DANGER

Keep out of the spaces under the lifted crawler frame or between the machine and the crawler frame avoid being trapped.
Failure to observe this precaution may result in a serious injury or loss of life.

WARNING

Do not insert finger or hand into a pin hole when aligning, inserting or removing pin.
Failure to observe this precaution may result in a serious injury or loss of life.

(4) Remove the securing pin (a).

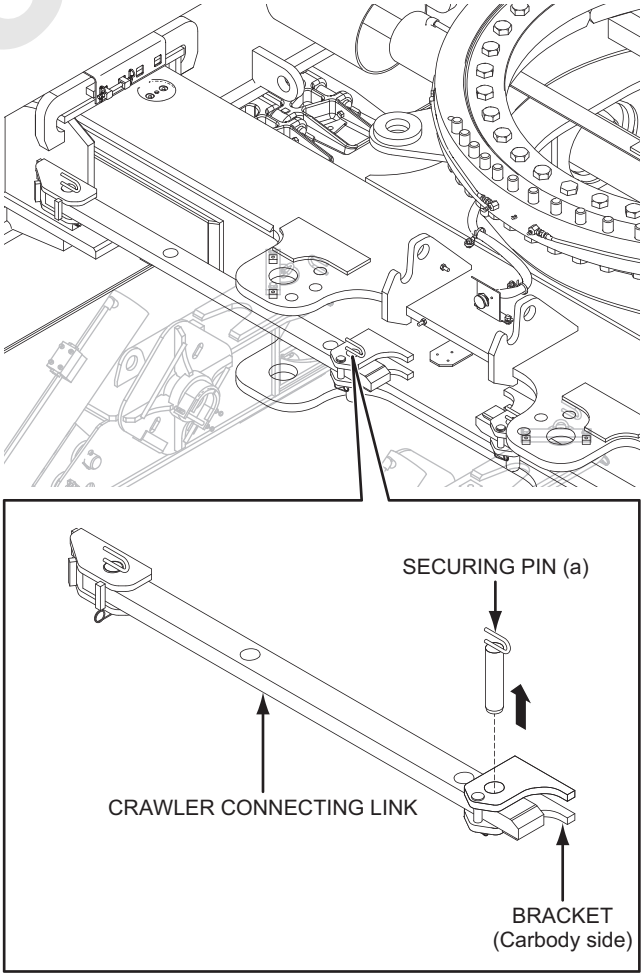

Reference Only

(5) Retract the crawler and align the pin holes of crawler connecting link and bracket then secure with the securing pin.
The securing pin is to be fixed with spring pin.

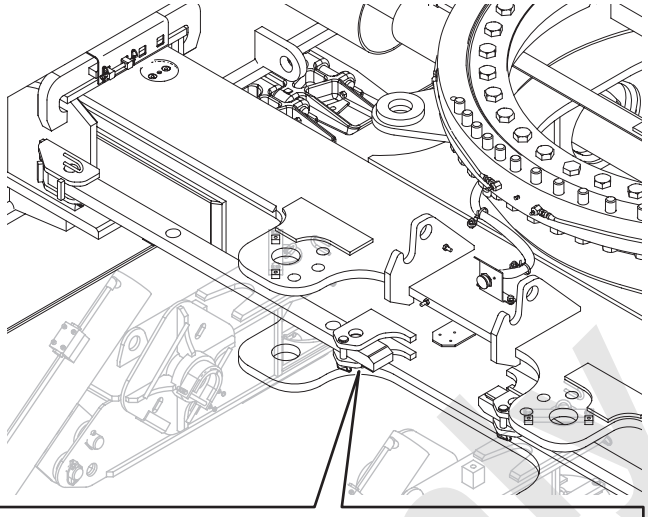

WARNING

Do not insert finger or hand into a pin hole when aligning, inserting or removing pin.
Failure to observe this precaution may result in a serious injury or loss of life.

SECURING PIN (b)
BRACKET (crawler frame side)
CRAWLER CONNECTING LINK
BRACKET (Carbody side)
SPRING PIN
BRACKET (Carbody side)
CRAWLER CONNECTING LINK
SECURING PIN (b)
BRACKET (crawler frame side)
SPRING PIN
SECURING PIN (b)
SPRING PIN
SECURING PIN (a)
SECURING PIN (a)
CRAWLER CONNECTING LINK
SECURING PIN (b)
SPRING PIN

(6) Swing the upper machinery to parallel against traveling direction and secure the swing lock and brake.

Reference Only

(7) Stop the engine.
(8) Open the cover by removing the fixing bolts.
Disconnect both right and left hydraulic hoses for travel at quick coupler portion.
(4 hoses/one side)

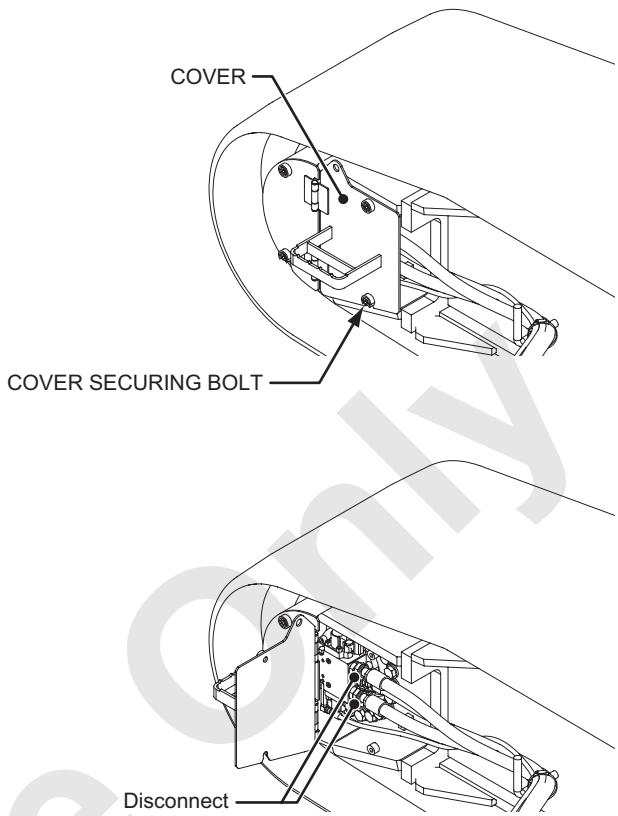

DANGER

Do not swing when connecting or disconnecting hydraulic hose of crawler to avoid accident of being caught.
Failure to observe this precaution may result in a serious injury or loss of life.

CAUTION

- **Perform the connection/disconnection of quick coupler when the circuit pressure is lowered after the engine stop.**
  If the pressure is remained, connection/disconnection would be difficult or oil would spray flies.
- **When connect the quick coupler, remove dirt and dust from both coupling parts.**
  The incomplete connection of coupling may result of oil leak and damage on the travel motor, reduction unit etc.
  Failure to observe this precaution may lead to damage the parts.

Reference Only

(9) Connect the remo-con cable to the receptacle on the carbody.

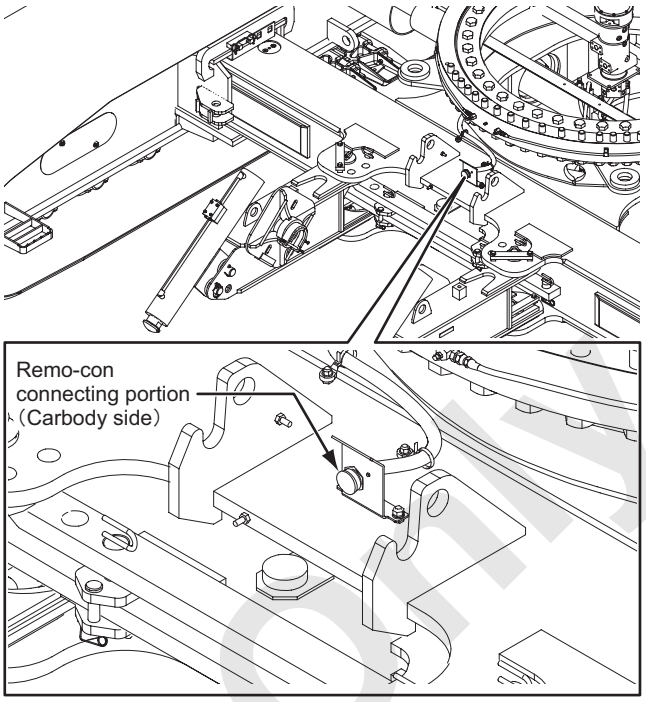

(10) Extend the translifter to the work position and secure with the translifter securing pin.

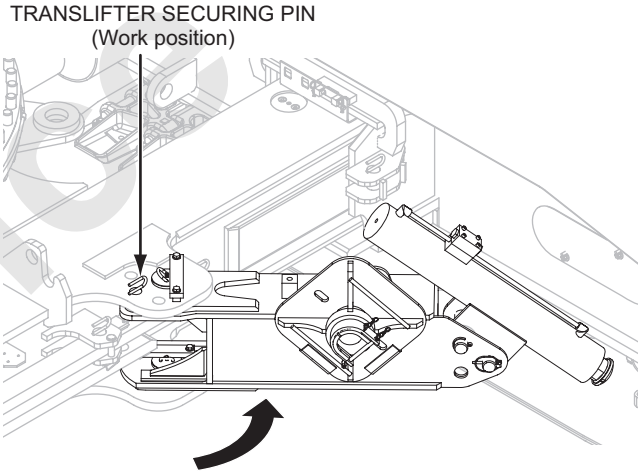

DANGER

Ensure the translifter must be secured at work position for working.
If secured it for transportation position lead to turn-over while swinging.
Failure to observe this precaution may result in a serious accident or loss of life.

WARNING

Do not insert finger or hand into a pin hole when aligning, inserting or removing pin.
Failure to observe this precaution may result in a serious injury or loss of life.

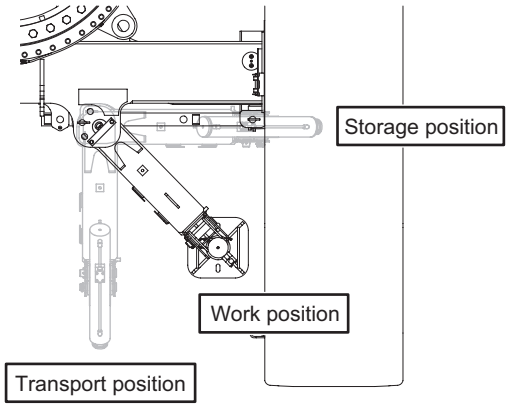

Reference Only

(11) Remove the vertical cylinder securing pin.
(12) Stand the vertical cylinder to extended position and insert the vertical cylinder securing pin to secure the work position.

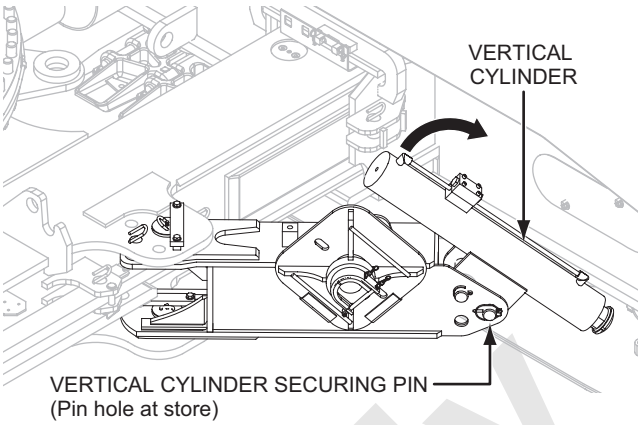

WARNING

Do not insert finger or hand into a pin hole when aligning, inserting or removing pin.
Failure to observe this precaution may result in a serious injury or loss of life.

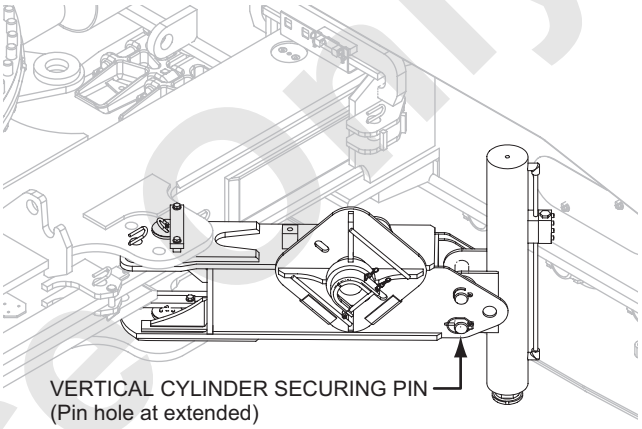

(13) Attach the float to the vertical cylinder and secure with the securing pin.
(14) Place the steel plate under the float for safety.

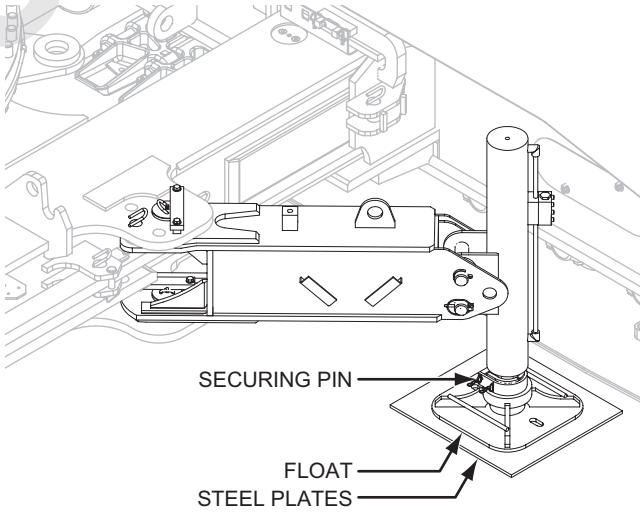

WARNING

Do not insert finger or hand into a pin hole when aligning, inserting or removing pin.
Failure to observe this precaution may result in a serious injury or loss of life.

CAUTION

The float weight is approx. 25 kg (55 lbs.).
Handle the float with two people to prevent injuries.

Reference Only

(15) Confirm if the hydraulic hoses have been connected to the vertical cylinder.
(4 places total 8 hoses)

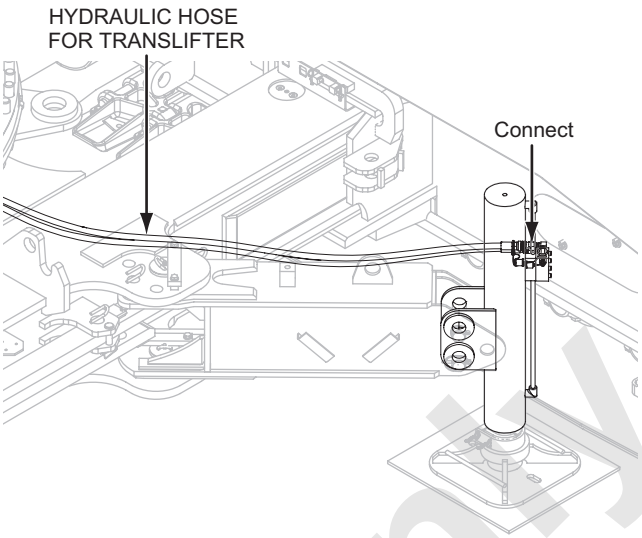

CAUTION

Check to see that the coupler does not come apart when pulled.

(16) Start the engine and set the speed to low.
(approx. 800 min^{-1} [800 rpm])

(17) Engage the swing lock pin and apply swing brake.
Turn the function lock lever to “LOCK” position.

Reference Only

(18) Extend the vertical cylinder until obtain the slightly clearance between the crawler shoe and the rollers.

(19) Reconfirm if all four floats are firmly contacting with the ground and lift up the base machine further and adjust 600 mm (2 ft.) of the load clearance.

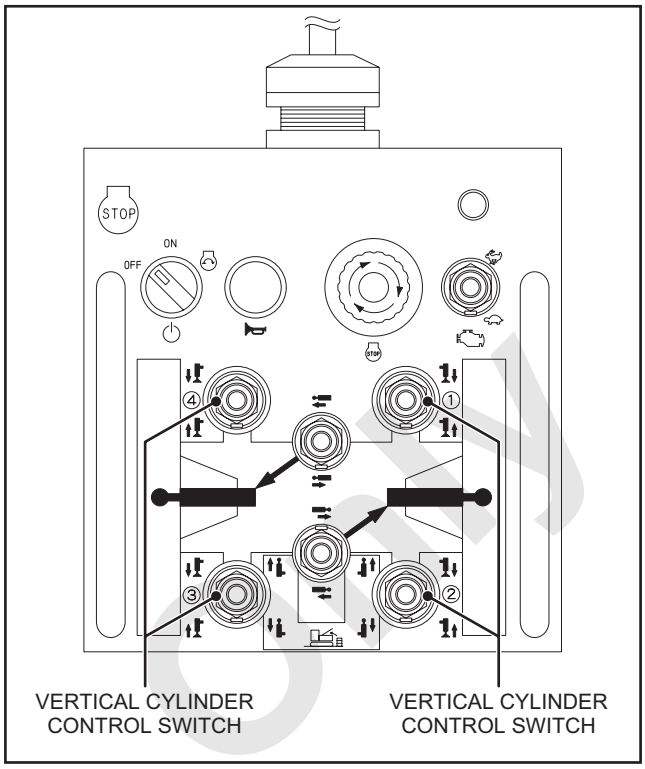

WARNING

Check if there is any abnormality on the ground condition of the float contacting area to prevent overturning of the machine.
Failure to observe this precaution may result in a serious accident.

WARNING

- **After contacting the float to the ground, the vertical cylinder can be able to control one by one.**
- **To avoid the turnover of the machine, keep the machine horizontally with monitoring a leveler while translifter is in operation.**
  Failure to observe this precaution may result in a serious injury or loss of life.
- **Ensure all four floats should be contacting with the ground evenly.**

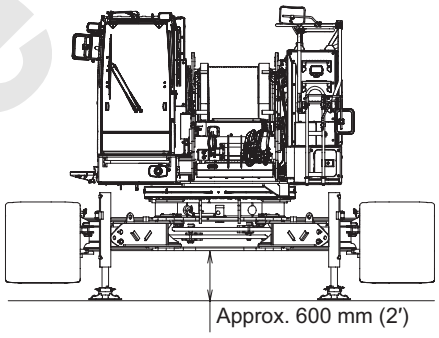

WARNING

To prevent overturn of the base machinery, ensure to engage the swing brake and lock when handling the translifter.
Failure to observe this precaution may result in a serious accident.

Reference Only

(20) Attach the slings to the left hand crawler frame and hold it with the self removal cylinder.
One side crawler mass : 7,600 kg (16,760 lbs)

- Upon lifting the crawler, use protectors to avoid entering the sling into the gap of shoes.

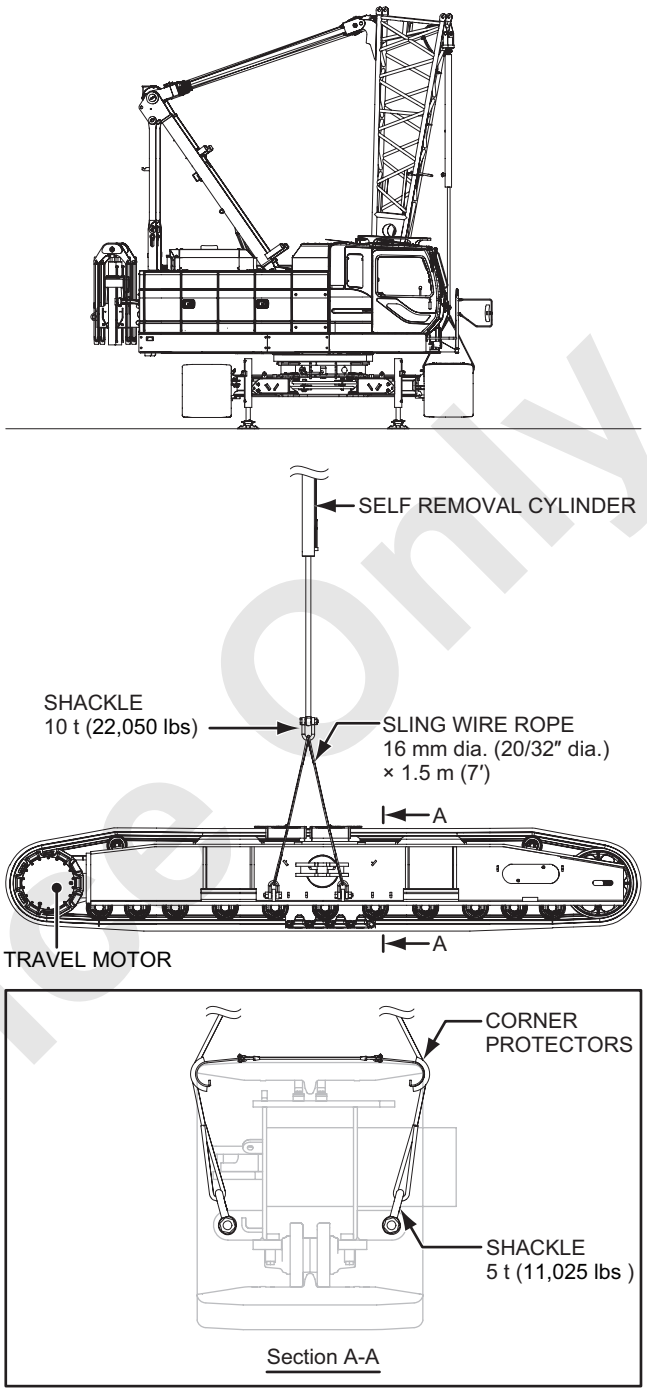

Reference Only

2. Remove the securing pin connecting the crawler ext./ret. cylinder and the crawler frame and retract cylinder fully.
   The removed securing pin to be insert the crawler side pin hole and secure with the spring lock pin.

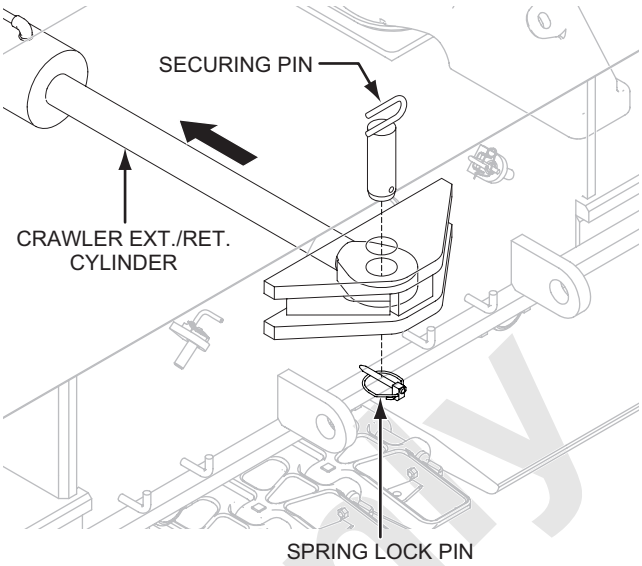

WARNING

Do not insert finger or hand into a pin hole when aligning, inserting or removing pin.
Failure to observe this precaution may result in a serious injury or loss of life.

CAUTION

The crawler Ext./Ret. cylinder should be kept in full retract position unless the crawler is to be extend or retract.
Otherwise may result in premature damage of cylinder due to sticking of dust/dirt on the sliding part of cylinder.
Failure to observe this precaution may lead to damage the parts.

Reference Only

(1) Remove the left hand crawler from axle extension by controlling the boom base and self removal cylinder.

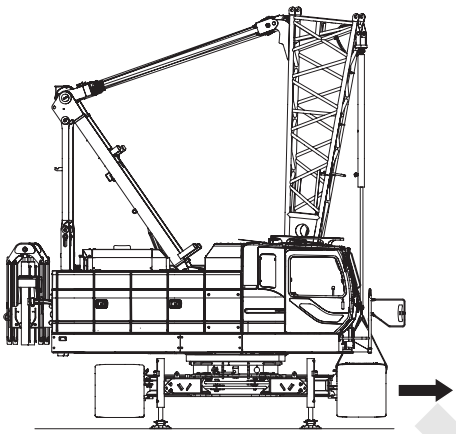

CAUTION

When draw out the crawler frame from the axle, keep the crawler securely and slowly removed so that the sudden load is not applied.
Failure to observe this precaution may result in a serious accident.

DANGER

Keep the working radius within 4.1 m (13 ft.) and also keep the center to center distance (90 degrees) of lifting side translifter cylinders as well while swinging when one side crawler is installed with lifting the other side of crawler by self removal cylinder to prevent overturning of the machine.
Failure to observe this precaution may result in a serious accident.

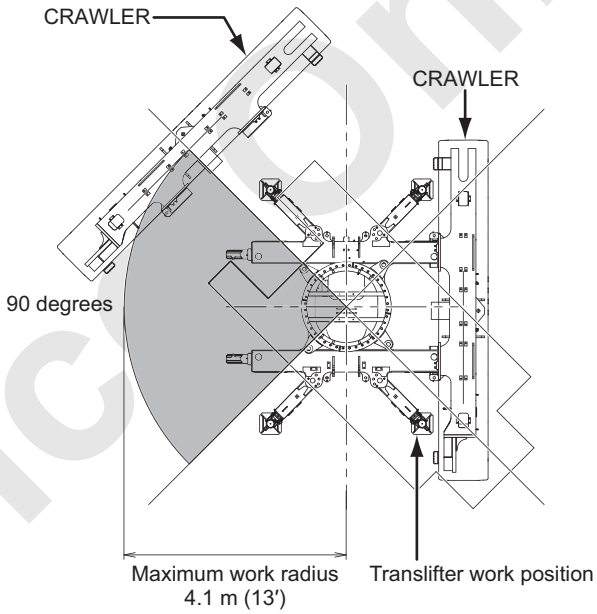

Reference Only

3. Other side of crawler removal

(1) Remove the crawler with the same manner as the previous side of crawler.

- When the crawler is not installed to the base machine, the upper machinery allowed to rotate 360 degrees with the lifting of crawler by self removal cylinder.

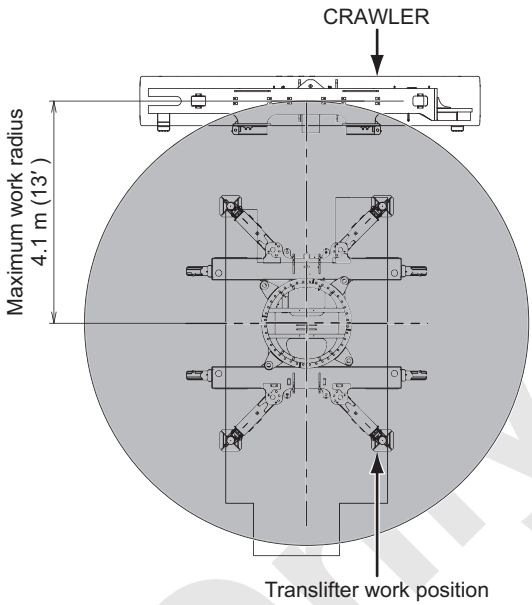

DANGER

Keep the working radius within 4.1 m (13 ft.) while swinging with lifting the crawler by self removal cylinder to prevent overturning of the machine. Failure to observe this precaution may result in a serious accident.

(2) Place the removed crawler on the trailer.
(3) Remove the retaining bracket being located at the root of axle extension.
(4) Rotate the all four axle extensions toward to right angle to the axle and secure with securing pins.

Reference Only

4.11 CARBODY WEIGHT INSTALLATION/REMOVAL (USING SELF REMOVAL CYLINDER [OPTION])

4.11.1 CARBODY WEIGHT INSTALLATION

DANGER

Do not enter under the weight or stand between the weight and surrounding object.
Failure to observe this precaution may result in a serious injury or loss of life.

1. Preparation of carbody weight installation

(1) This machine's carbody weight is composed of two pieces.
Never use the carbody weight other than specified one.

EACH WEIGHT MASS

Carbody weight	Weight
Weight (1)	7.2 t (15,873 lbs)
Weight (2)	7.2 t (15,873 lbs)

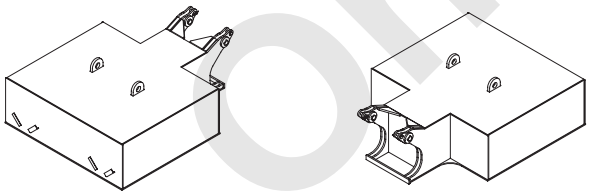

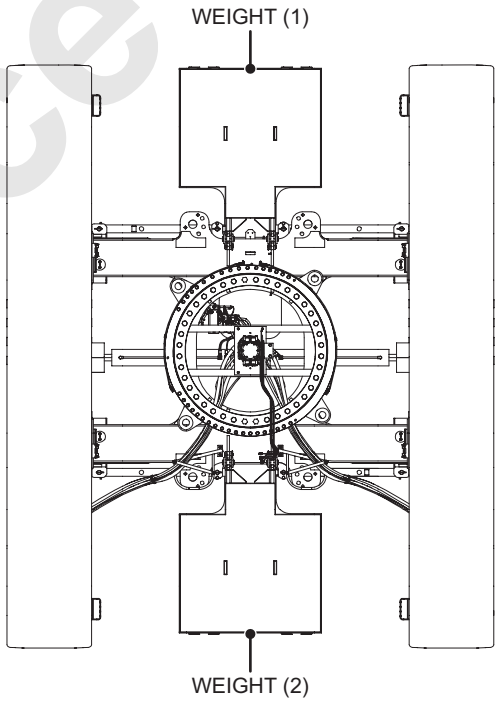

Reference Only

(2) Before installing the carbody weight, check that the machine is in the following conditions.

- Gantry : Work position
- Ground : Firm and level
- Crawlers : Extended

WARNING

As to the stability in swing and traveling to avoid the machine turnover, refer to the article "4.1 SWING AND TRAVEL STABILITY".
Failure to observe this precaution may result in a serious injury or loss of life.

(3) When installing or removing the carbody weight, prepare the tools as listed below.

TOOL

- Attached tool set
- Sling wire rope
  22 mm dia. (7/8″ dia.) × 0.8 m (3′) × 2
- Shackle 10 t (22,050 lbs)
- Shackle 10 t (22,050 lbs) × 2

Reference Only

2. Setting of LMI

When removing or installing the crawler, set up the LMI as the following.

Note

Unless the setting of load safety device, the auto-stop function will be works and the machine would not be operated.

(1) Press MENU icon on the main screen to display the menu.

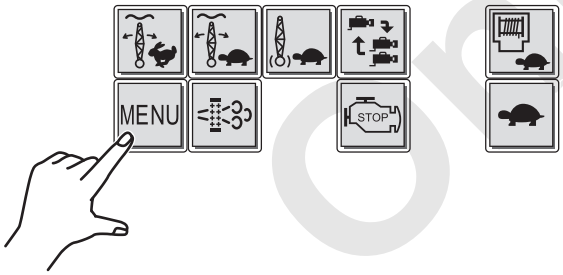

(2) On the selected screen, press icon.

(3) Crane attachment select screen is displayed. Select “9 (Self removal cylinder)”.

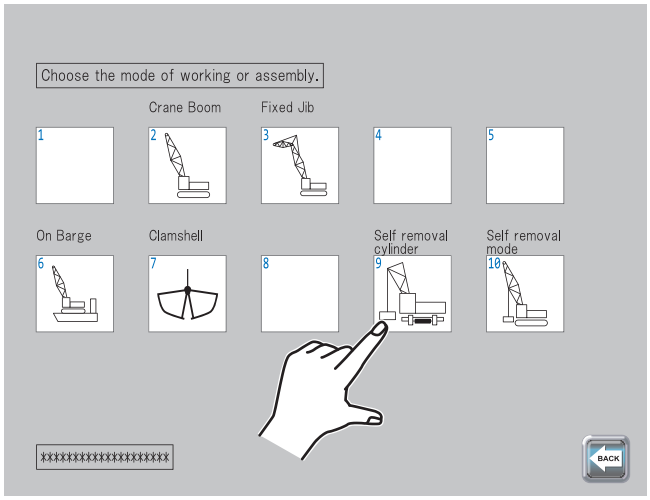

Reference Only

(4) The operation select screen is displayed.
Select “3 (CB/W removal mode)”.

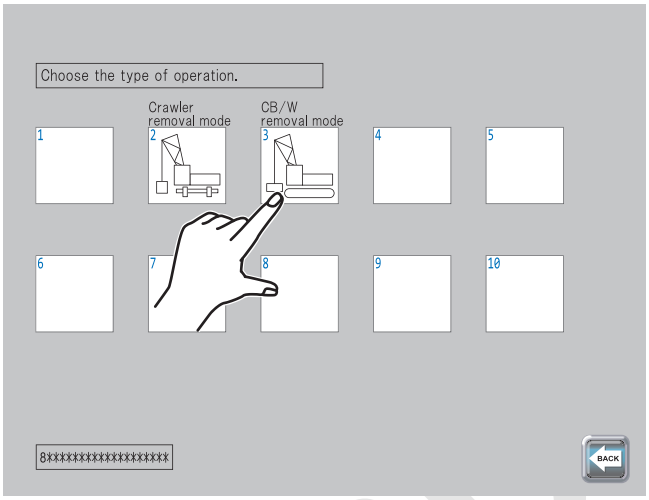

(5) Press SET.

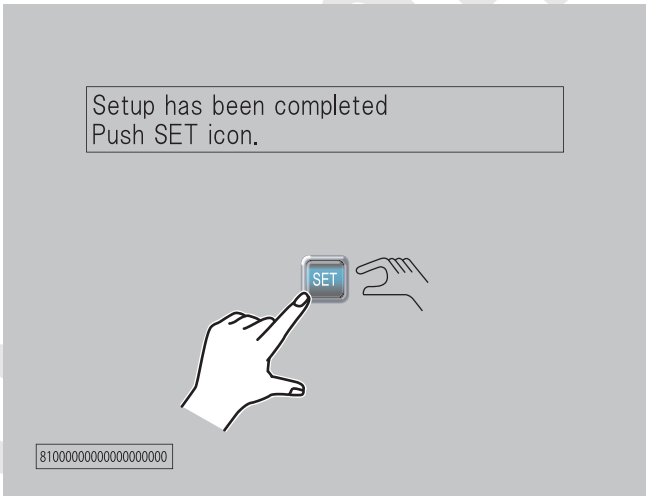

(6) Data is being loaded.

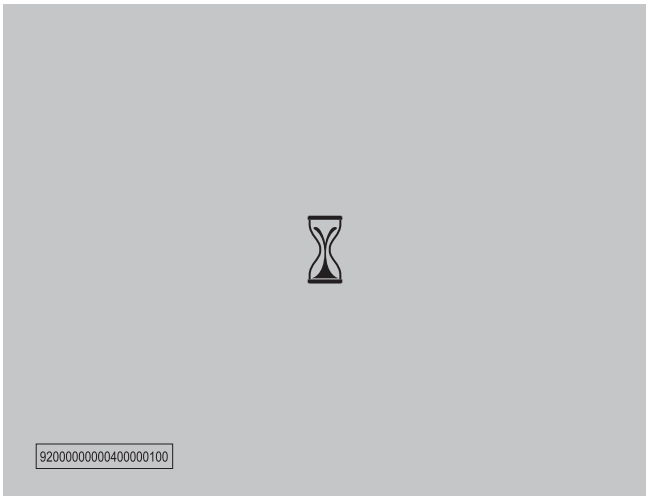

Reference

(7) After data is loaded, the result of selection is displayed.
Check if the selected items are correct.

- If correct, press OK.
  The screen returns to the main screen.
- If not correct, press to restart the input.

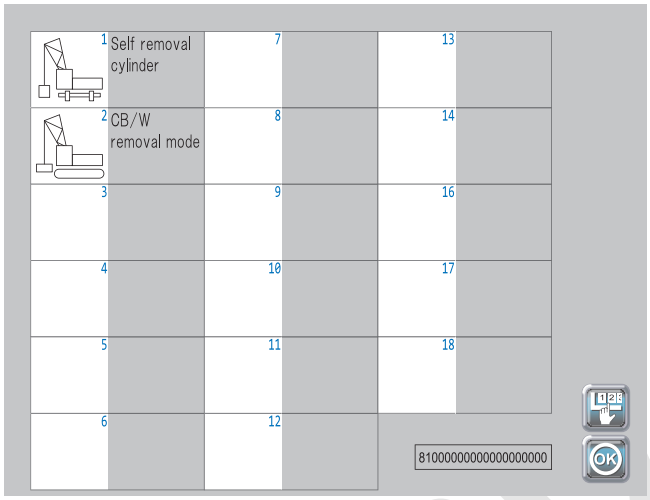

Note

In case the selection is limited to only one choice, select screen is to be neglected and indicates only the result.

Reference Only

3. Display main screen and ready to crane operation.

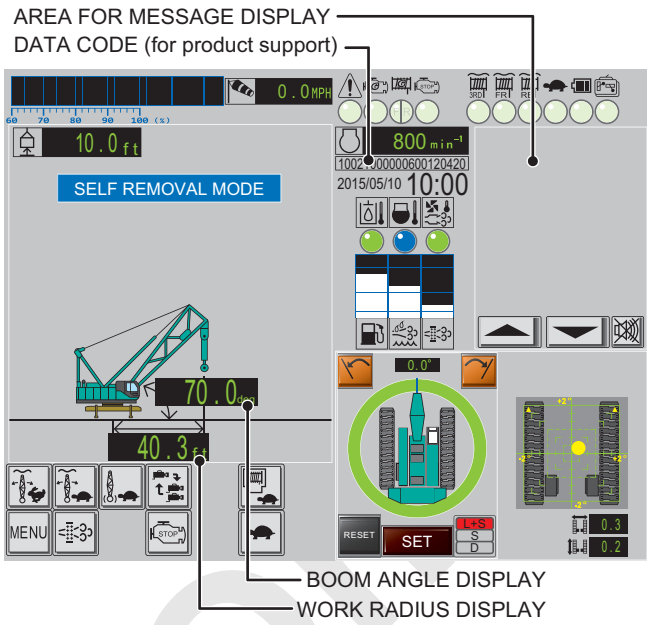

AUTOSTOP AT SELF REMOVAL MODE

When the machine stops due to reach to the danger condition, the machine can't be moved to the direction toward to the side with marked "×", other than the direction marked "×" can be moved the machine without using release switch.

OVERLOAD	BOOM RAISING (Controlled by ML controller)
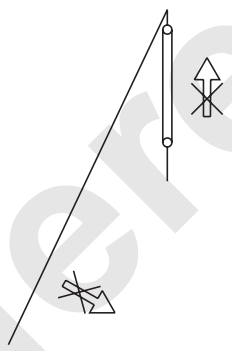	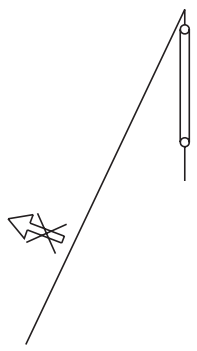

Reference Only

4. Carbody weight (1) installation

(1) Attach the sling to the carbody weight on the trailer and lift it by self removal cylinder.

DANGER

Do not enter under the weight or stand between the weight and surrounding object.
Failure to observe this precaution may result in a serious injury or loss of life.

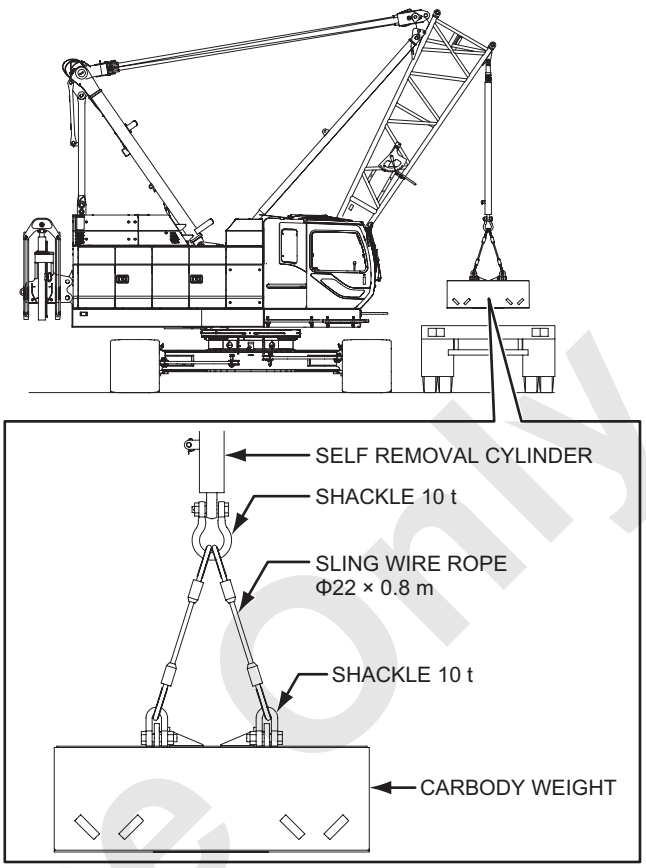

(2) Swing the upper machinery for approx. 4.5 degrees.

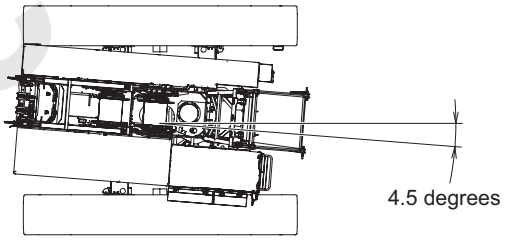

Reference Only

(3) Raise the boom to bring the carbody weight closer.
(4) Bring the carbody weight (a) portion to right above the carbody side hanging bracket and align with it.

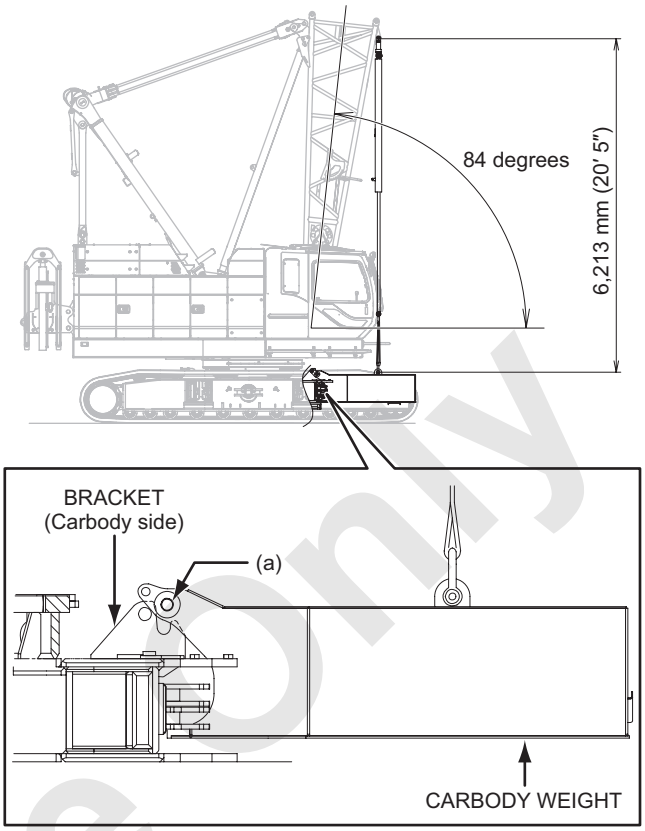

DANGER

Do not enter under the weight or stand between the weight and surrounding object.
Failure to observe this precaution may result in a serious injury or loss of life.

(5) Extend the self removal cylinder and rest the carbody weight (a) portion to the carbody side hanging bracket.

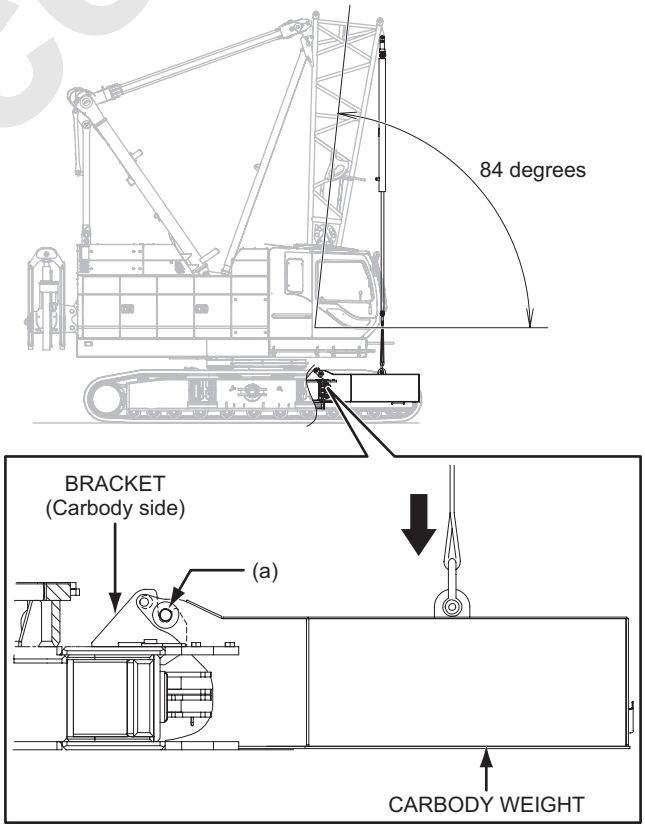

Reference Only

(6) Insert the carbody weight securing pin and secure the pin with spring pin.
(2 places both left and right side.)

WARNING

Do not insert finger or hand into a pin hole when aligning, inserting or removing pin.
Failure to observe this precaution may result in a serious injury or loss of life.

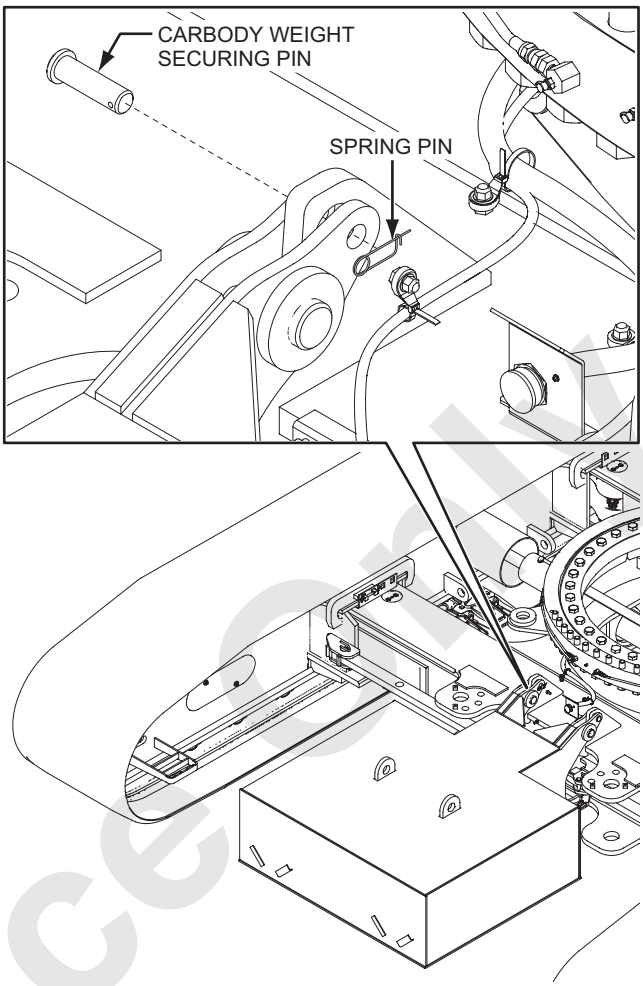

(7) Install the carbody weight (2) as same manner as carbody weight (1).

Reference Only

5. In case of the carbody weight detecting unit is equipped (option)

- Connect the detect harness installed on the front side weight and base machinery harness (CN-914F) and both water proof caps too.
- Detect harness installed on the weight (2) is not to be connected.
- If the carbody weight is not equipped as use as reduced weight, leave the base machinery harness with cap as is.

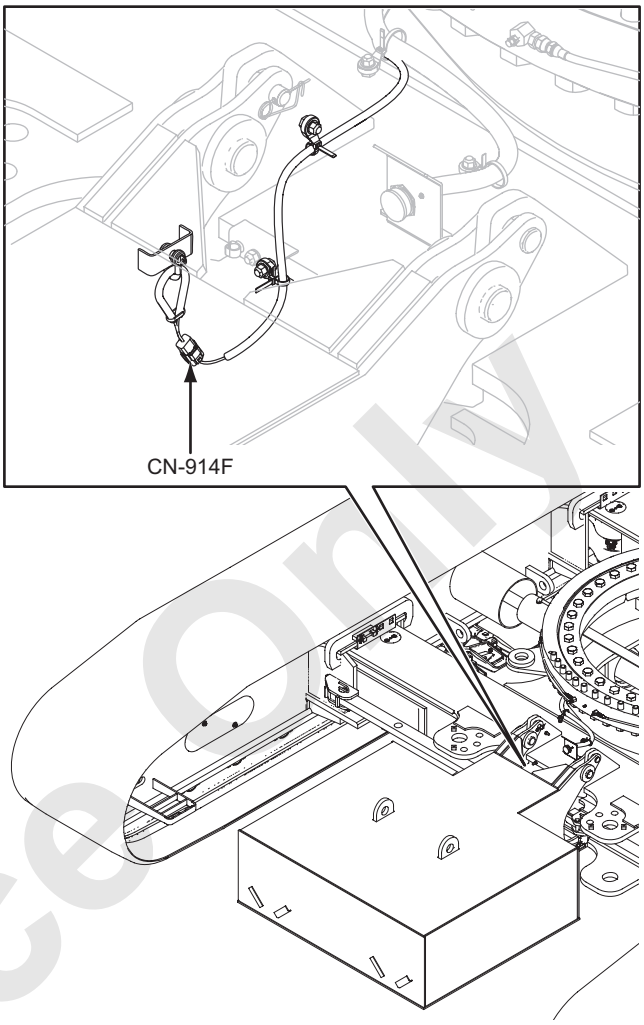

- When setting the LMI, ensure to select the item matched with the actual weight configuration.
  If wrong item is selected, an error [ML-ME064] will appear on the monitor and buzzer will sound.

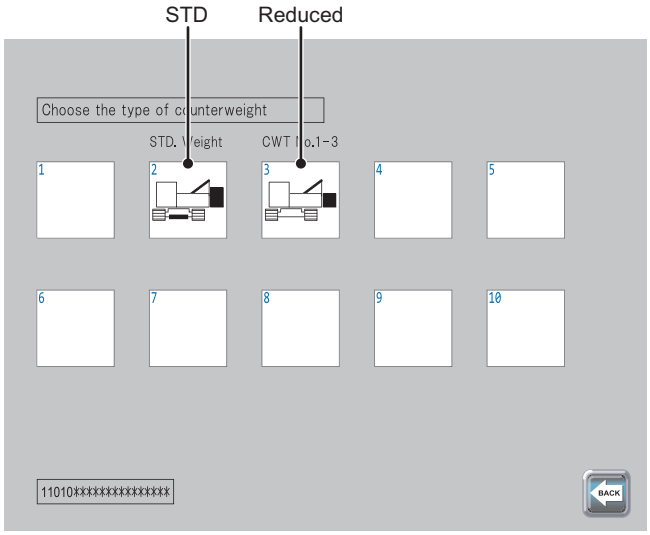

Note

In case the carbody weight is not equipped as reduced weight specification, leave the base machine harness with cap as is.

Reference Only

4.11.2 CARBODY WEIGHT REMOVAL

DANGER

Do not enter under the weight or stand between the weight and surrounding object.
Failure to observe this precaution may result in a serious injury or loss of life.

1. Preparation of carbody weight removal

(1) This machine's carbody weight is composed of two pieces.

EACH WEIGHT MASS

Carbody weight	Weight
Weight (1)	7.2 t (15,873 lbs)
Weight (2)	7.2 t (15,873 lbs)

(2) Before removing the carbody weight, check that the machine is in the following conditions.

- Gantry : Work position
- Ground : Firm and level
- Crawlers : Extended

WARNING

As to the stability in swing and traveling to avoid the machine turnover, refer to the article "4.1 SWING AND TRAVEL STABILITY".
Failure to observe this precaution may result in a serious injury or loss of life.

(3) When installing or removing the carbody weight, prepare the tools as listed below.

TOOL

- Attached tool set
- Sling wire rope
  22 mm dia. (7/8″ dia.) × 0.8 m (3′) × 2
- Shackle 10 t (22,050 lbs)
- Shackle 10 t (22,050 lbs) × 2

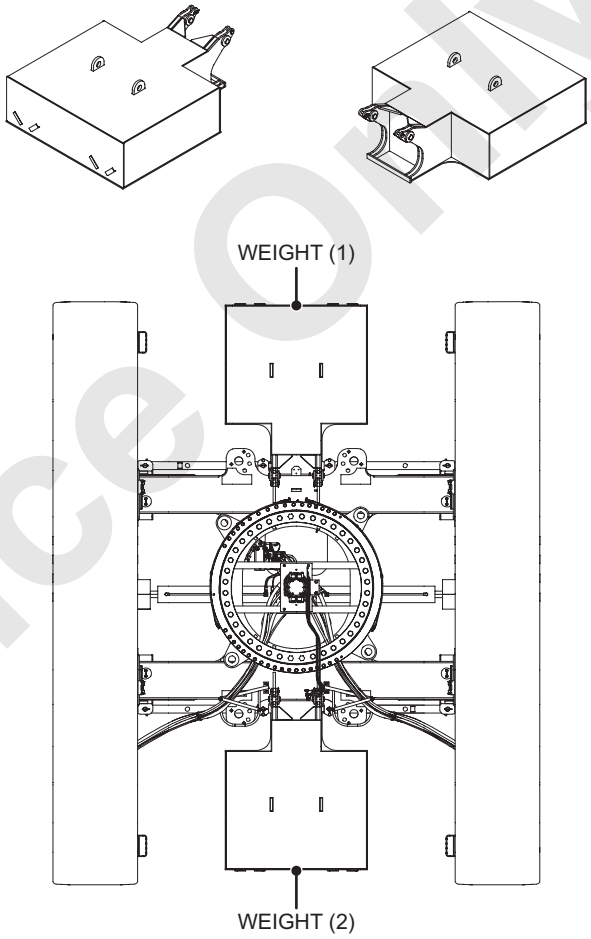

Reference Only

2. Swing the upper machinery for approx. 4.5 degrees.

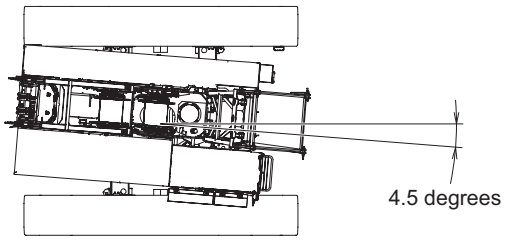

3. For the model equipped with weight detect harness (CN-914F) at the front side of the main machinery, disconnect the harness and apply the waterproof caps on both weight and the main machinery sides.

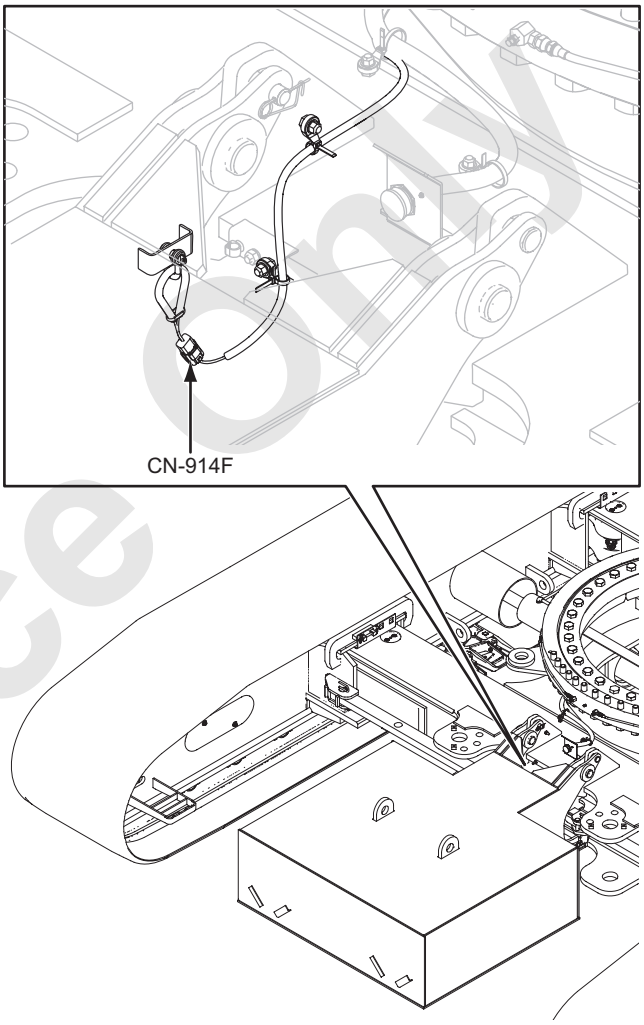

Note

After removing of the carbody weight, surely connect the waterproof cap to the main machinery harness.

Reference Only

4. Remove the carbody weight installation pin and secure the pin with retaining pin.
   (Right and left 2 locations)

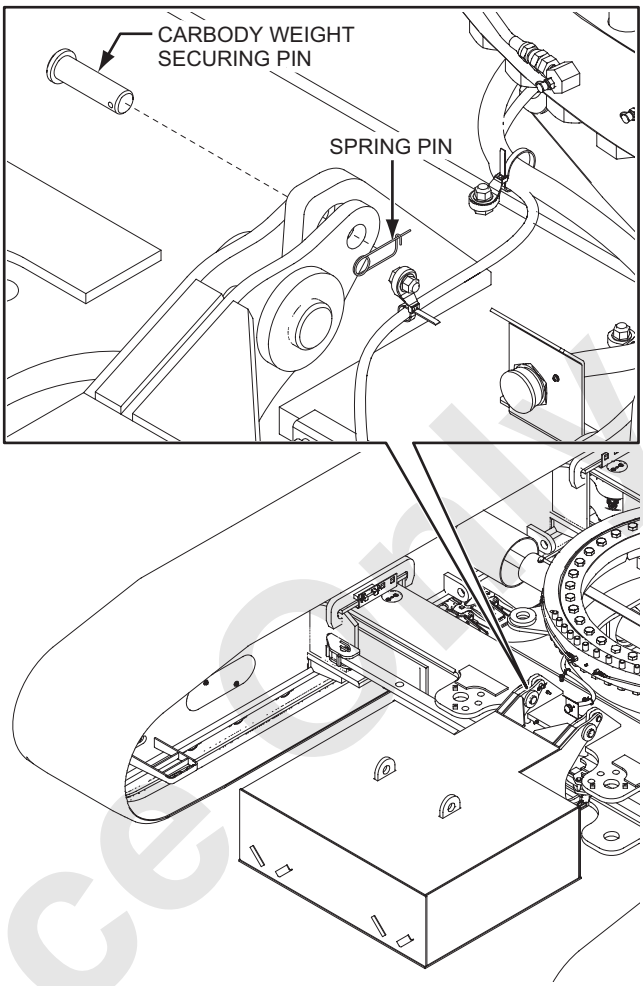

5. Attach the sling to the carbody weight.
   Lift the carbody weight by the boom base and self removal cylinder and leave the carbody weight (a) portion from the carbody side hanging bracket.

DANGER

Do not enter under the weight or stand between the weight and surrounding object.
Failure to observe this precaution may result in a serious injury or loss of life.

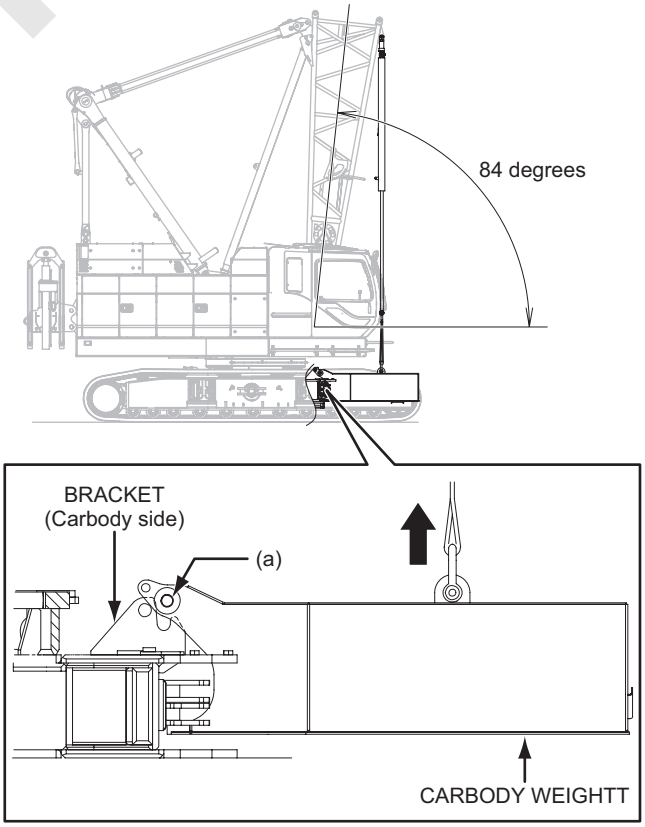

Reference Only

6. Lower the boom slightly and move the carbody weight away from the main machinery.

7. Lower the boom further and place the weight to the ground or on the trailer and disconnect the slings.

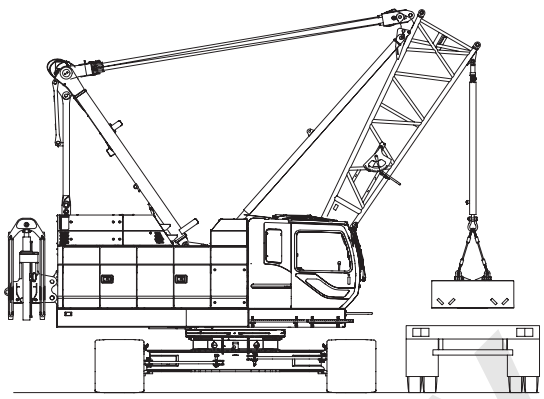

8. Remove the carbody weight (2) as same manner as carbody weight (1).

Reference Only

Reference Only

5. ASSEMBLY/DISASSEMBLY OF CRANE ATTACHMENT

5.1 ASSEMBLING THE ATTACHMENT 5-5
5.1.1 ARRANGEMENT OF BOOM/JIB/GUY LINE 5-6
5.1.2 BOOM AND GUY LINE ARRANGEMENT 5-8
5.1.3 HANDLING OF SPREADER GUIDE 5-15
5.1.4 INSTALLING THE BOOM 5-18
5.1.5 CAUTION FOR CANTILEVER 5-28
5.1.6 FRONT DRUM WIRE ROPE REEVING 5-29
5.1.7 INSTALLING THE AUXILIARY SHEAVE 5-34
5.1.8 REAR DRUM WIRE ROPE REEVING TO AUXILIARY SHEAVE 5-35
5.1.9 ASSEMBLING THE FIXED JIB 5-38
5.1.10 REAR DRUM WIRE ROPE REEVING TO THE FIXED JIB 5-41
5.1.11 FUNCTION CHECK OF EACH LIMIT SWITCH 5-44
5.2 ERECTING THE ATTACHMENT 5-45
5.2.1 CONFIRMATION BEFORE ERECTING THE ATTACHMENT 5-45
5.2.2 ERECTING THE ATTACHMENT 5-46
5.2.3 CONFIRMATION BEFORE LOWERING THE ATTACHMENT 5-49
5.2.4 LOWERING THE ATTACHMENT 5-50
5.3 DISASSEMBLING THE ATTACHMENT 5-51
5.3.1 TREATMENT OF OVERHOIST LIMIT SWITCH WIRING 5-52
5.3.2 WINDING UP THE FRONT/REAR DRUM WIRE ROPES 5-54
5.3.3 DISASSEMBLING THE JIB 5-56
5.3.4 REMOVING THE AUXILIARY SHEAVE 5-59
5.3.5 DISASSEMBLING THE BOOM 5-60
5.4 CAUTION WHEN TRANSPORTING BOOM 5-65

Reference Only

Reference Only

5. ASSEMBLY/DISASSEMBLY OF CRANE ATTACHMENT

This section covers assembling, erecting, lowering and disassembling of the crane attachment and transport of the boom.
This assembly procedure starts when the machine is under the following conditions.

- The crawler is extended position.
- Counterweights and carbody weights are installed for the desired configuration.
- The boom hoist rope has been roved through the upper and lower spreader and the gantry is in work position (high gantry).
- The boom base is attached to the base machine.
- The crane backstops have been installed.

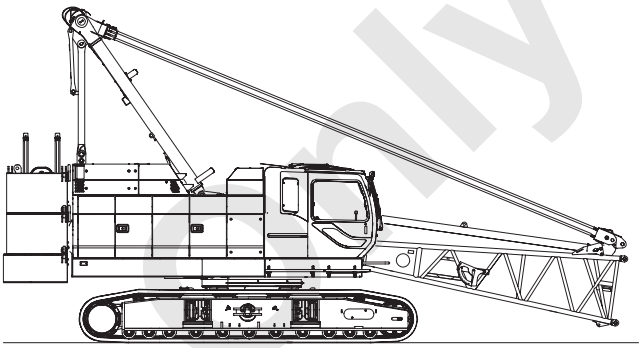

WARNING

Do not lower the boom base tip below ground level, otherwise interfere the boom and/or backstop with surrounding components and lead to damage parts.

Before starting the work, confirm the following items.

1. Place

(1) Check point prior to work
- A qualified supervisor who is competent in the procedures.
- Hold a pre-work meeting for safety.
  Review potential hazards and hazardous locations in the course of work.
- Make every worker aware of work contents, procedure and signal.
- Inspect assist crane and other equipment for their condition.

(2) Securing place
- Select a firm and level space enough for the task.
  Place steel plates or crane mats.
- Assign areas for the assist crane, parts storage and trailer access.
- The ground shall be drained unless the place is in marshes or wetland.

Reference Only

2. Work procedure and prearrangement for safety.

   Have a qualified supervisor who is competent in assembly and disassembly procedures.
   Before assembling work, gather the all concerned to make previous arrangement for the working procedure and safety, and make precise role and responsibility of each person.
   Review potential hazards and hazardous locations in the course of work.

3. Preparation before work

- Secure the setting place of assist crane and prepare the required lifting gears, protective materials and tools.
- Secure required number of workers for the work.
  (Crane operators, assistant operators, slinging workers and signal persons)
- Take appropriate action to keep personnel off the work area other than workers during work.

4. Cautions during assembly or disassembly work

- During assembly or disassembly work, install the waterproof cap on the cable end of the hook overhoist preventing device.
  During crane work, wire the overhoist cable properly and remove the waterproof cap.
- Refer to the article “8.2 DIMENSION, WEIGHT OF EACH COMPONENT” for weight, dimension during assembly.
- The operator has to be informed if any person moved to out of sight from the operator or at hazardous location when equipment or machine part moves.

⚠ DANGER

Do not stand on, or enter under/inside of the attachment being assembling/disassembling.
Failure to observe this precautions may result in a serious injury or loss of life.

Reference Only

DANGER

Do not apply slings directly to a sharp edge part to prevent the slings from cutting.
Apply the sling to the guy cable pin hole or bracket for lifting through a shackle.
Failure to observe these precautions may result in a serious accident.

WARNING

- **When working at a high elevation, be sure to use a safety belt to prevent falling.**
  Failure to observe this precaution may result in a serious injury or loss of life.
- **Use a scaffolding board for working on the attachment.**
  Failure to observe this precaution may result in a serious injury or loss of life.

WARNING

Do not insert finger or hand into a pin hole when aligning, inserting or removing pin.
Failure to observe this precaution may result in a serious injury or loss of life.

WARNING

To avoid an accident resulting in injury or death by dropping the guy line which being on the lattice pipe, secure the both ends of guy line to the lattice pipe by wire or lower the guy line to the ground with assist crane.
Failure to observe this precaution may result in a serious injury or loss of life.

Reference Only

CAUTION

When lifting the boom, jib use the protector or the synthetic fiber sling.
Do not lift at lattice pipe. In case of lifting semi-assembled boom, jib lift at connecting part.
Failure to observe this precaution may lead to damage parts.

CAUTION

Hanger bracket which is shown right figure can be used only when the boom is at a single part.
Do not use it when the plural booms are connected.

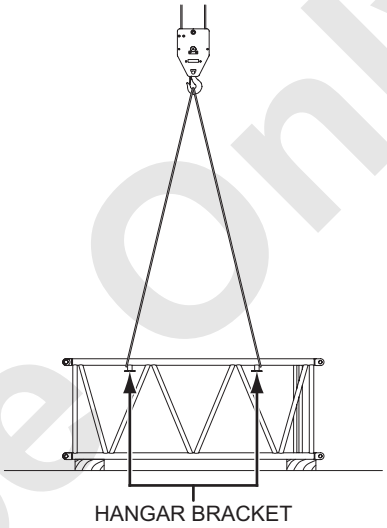

Reference Only

5.1 ASSEMBLING THE ATTACHMENT

TOOL

- Attached tool set
- Assist Crane (25 t capacity)
- Wire Rope Slings (Synthetic Fiber Sling)
- Wood block
- Corner Protectors

When assembling the crane attachment, press (assy/disassy icon).
Then, the load safety device enters the assy/disassy mode, and the automatic stop is canceled.

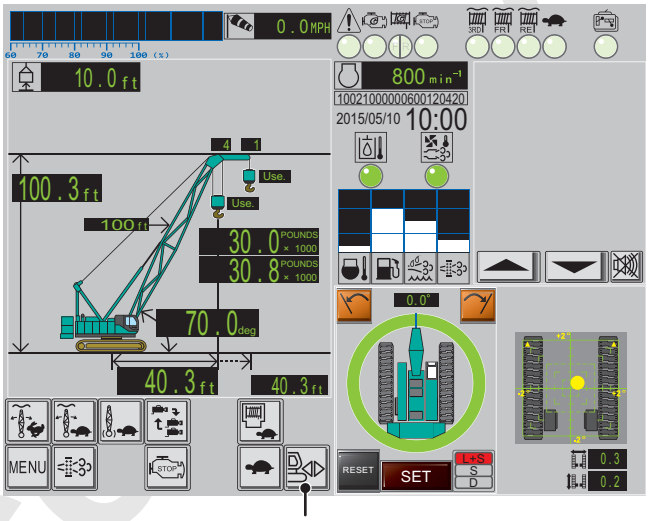

Note

Press (assy/disassy icon), (boom, jib lowering icon) for more than 1 second.

Note

When the boom angle is being high or the load is detecting by the load cell, the assy/disassy mode cannot be set.
When the boom is raised after the assembly, assy/disassy mode will be released.

Refer to the article “8.2 DIMENSION, WEIGHT OF EACH COMPONENT” for individual dimension, weight of the crane attachment.

Reference

5.1.1 ARRANGEMENT OF BOOM/JIB/GUY LINE

1. Boom and jib

Prepare the boom and jib following the arrangement chart.
Do not assemble the boom which is not shown in the arrangement chart.
Check the each boom and jib component for damage.
If damage is found, repair the damage at the designated service shop.

Specification	Counterweight	Boom length	The boom length in which the jib can be installed	The boom length in which the aux. sheave can be installed
STD crane	STD	12.2 m to 61.0 m (40′ to 200′)	24.4 m to 57.9 m (80′ to 190′)	12.2 m to 57.9 m (40′ to 190′)
	Reduced	12.2 m to 57.9 m (40′ to 190′)	–	12.2 m to 54.9 m (40′ to 180′)

DANGER

Do not use damaged boom, jib which may cause of collapse and lead to personnel injuries or loss of life.
Failure to observe this precaution may result in a serious accident.

2. Guy line

Prepare the guy lines following the arrangement chart.
The diameter of the boom guy line is 30 mm (1-3/16 in.), and the diameter of the jib guy line is 20 mm (13/16 in.).
To identify each guy line, see the part number stamped on the connector. (last 5 digits)

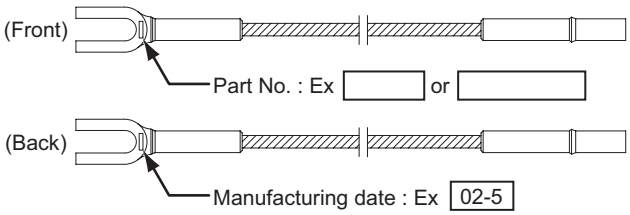

Reference Only

3. Steel plate

As for crane specification, when erecting or lowering of the combination of main boom 57.9 m (190 ft.) length and the jib of any length, place steel plates between the ends of the crawlers and the ground as shown.

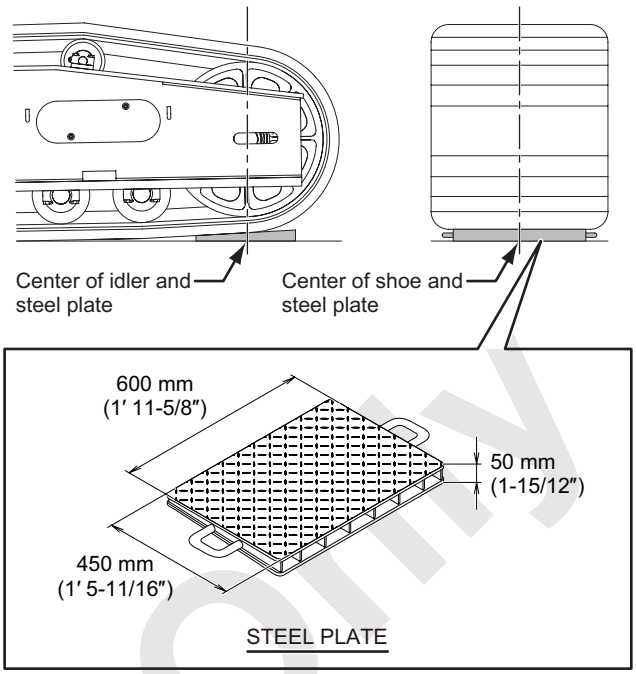

CAUTION

Travel the crane until the idler center comes to the center of the steel plate.

Reference Only

5.1.2 BOOM AND GUY LINE ARRANGEMENT

1. Boom and guy line configuration

Note

Depending on the purchased configuration of boom, boom may not be able to arrange as shown on the chart.
The boom arrangement with the "*" is the preferred configuration.
Using the "*" arrangement will allow any shorter boom length to be assembled.
Shown below the "*" configurations are acceptable arrangement if required due to boom that was purchased.
The number of guy lines to supply is minimum number of which can be arranged with purchased boom configuration and depending the boom arrangement, guy line may not be able to arrange as shown the chart.
In that case, guy line configuration substitutes as shown right figure.

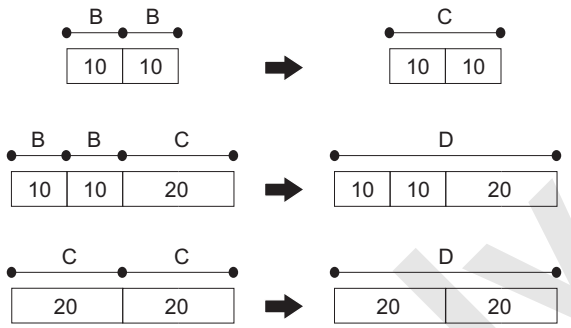

△	Mark shows the boom insert with lug.
⬀	Mark shows the boom insert with lugs attached and the guy line installing position when the jib is used.
○	Mark shows the installing of the cable roller for the insert boom.
●	Mark shows the installing of the cable roller for the boom tip.

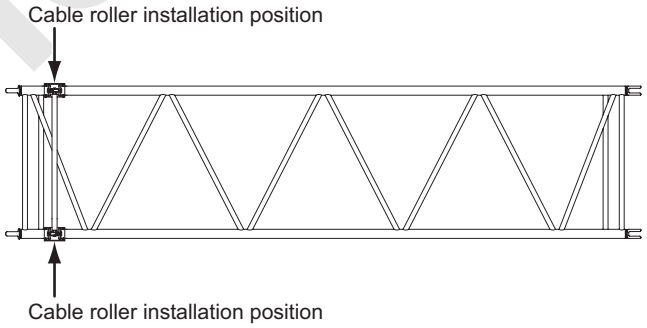

Boom length : m (ft.)	Boom and guy line configuration	With aux. sheave	With fixed jib	Max. parts of line		Boom self erecting at side direction
				Front drum	Rear drum	
12.2 (40)	A	○	×	8	1	○
15.2 (50)	B A 10	○	×	8	1	○
18.3 (60)	* B B A 10 10 C A 20	○	×	8	1	○

○ : Allowed × : Not allowed

Reference Only

Boom length : m (ft.)	Boom and guy line configuration	With aux. sheave	With fixed jib	Max. parts of line		Boom self erecting at side direction
				Front drum	Rear drum	
21.3 (70)	* 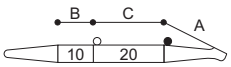	○	×	6	1	○
24.4 (80)	* 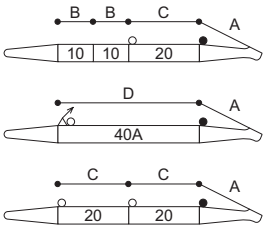	○	○	6	1	○
27.4 (90)	* 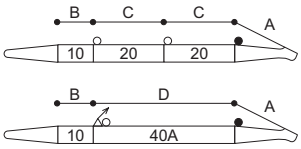	○	○	5	1	○
30.5 (100)	* 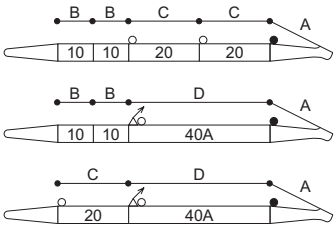	○	○	5	1	○
33.5 (110)	* 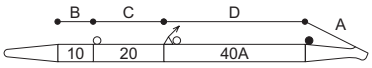	○	○	4	1	○
36.6 (120)	* 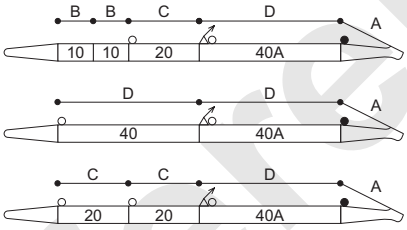	○	○	4	1	○
39.6 (130)	* 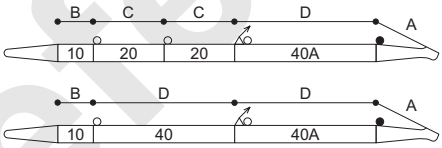	○	○	4	1	○
42.7 (140)	* 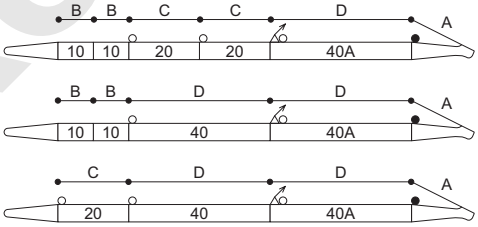	○	○	4	1	○
45.7 (150)	* 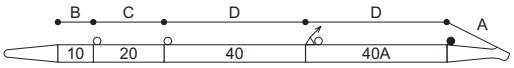	○	○	4	1	○

○ : Allowed × : Not allowed

Reference Only

Boom length : m (ft.)	Boom and guy line configuration	With aux. sheave	With fixed jib	Max. parts of line		Boom self erecting at side direction
				Front drum	Rear drum	
48.8 (160)	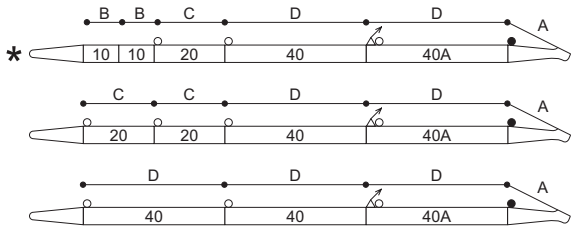	○	○	2	1	○
51.8 (170)	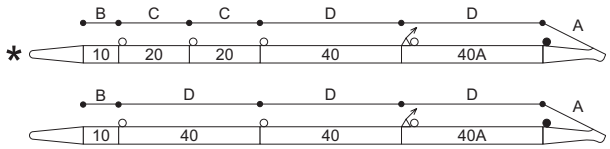	○	○	2	1	○
54.9 (180)	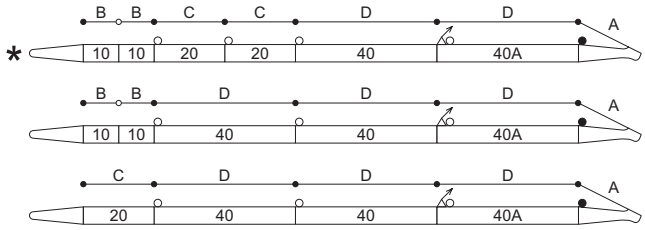	○	○	2	1	○
57.9 (190)	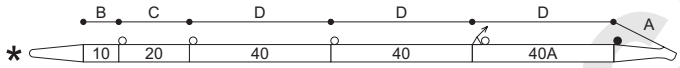	○	○ *	2	1	×
61.0 (200)	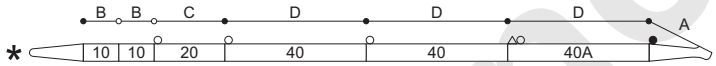	×	×	2	×	×

○ : Allowed × : Not allowed

* When raising / lowering the boom with jib, require steel plate.

Reference Only

KIND OF BOOM INSERT

Symbol	Boom length	Specification
10	3.0 m (10′)	Without lug
20	6.1 m (20′)	Without lug
40	12.2 m (40′)	Without lug
△ 40A	12.2 m (40′)	With lug

In case of with jib configuration, 12.2 m (40 ft.) boom insert with lug is required.

KIND OF BOOM GUY LINE

Symbol	Guy line dimension		Part number	Remarks : m (ft.)	Connector type
	Diameter : mm (in.)	Length : m (ft. in.)			
A	30 (1-3/16″)	6.17 (20′ 2-15/16″)		Boom tip	
B	30 (1-3/16″)	3.05 (10′)		3.0 (10′) Boom insert	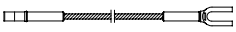
C	30 (1-3/16″)	6.10 (20′)		6.1 (20′) Boom insert	
D	30 (1-3/16″)	12.20 (40′)		12.2 (40′) Boom insert	

Reference Only

ARRANGEMENT OF JIB AND GUY LINE

The length of the boom in which the jib can be attached is 24.4 m (80 ft.) to 57.9 m (190 ft.).

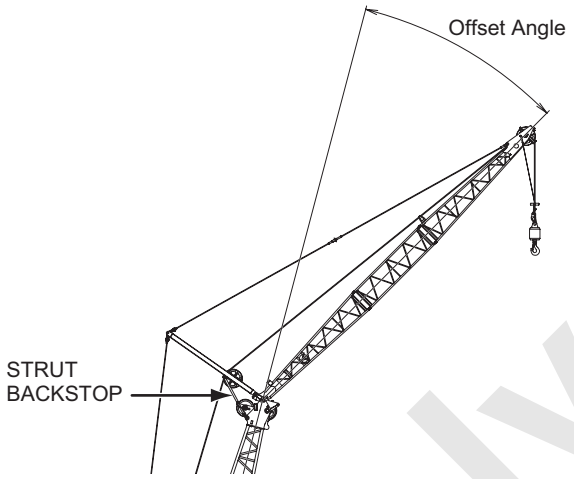

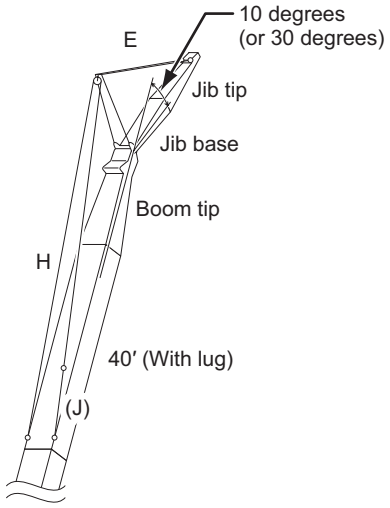

9.1 m (30′) jib

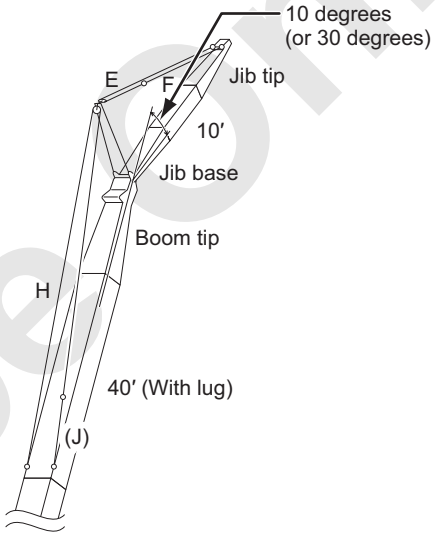

12.2 m (40′) jib

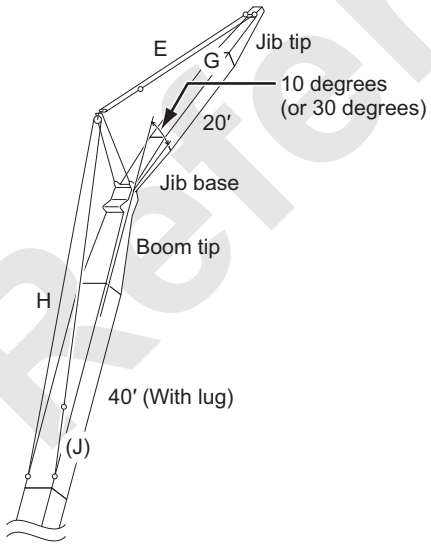

15.2 m (50′) jib

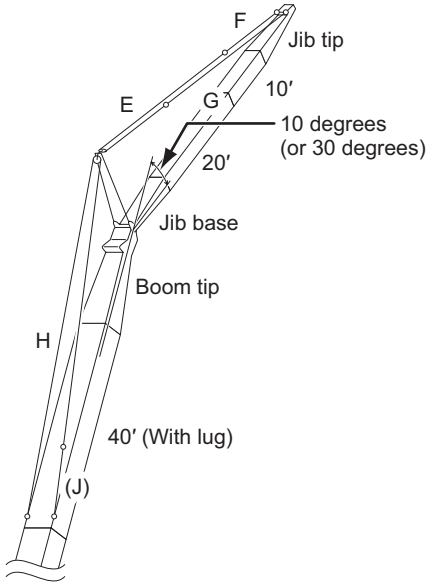

18.3 m (60′) jib

Reference Only

KIND OF JIB INSERT

Symbol	Jib length	Specification
10	3.0 m (10′)	Jib
20	6.1 m (20′)	Jib

ARRANGEMENT OF GUY LINE IN BOOM SIDE

Offset angle	Boom arrangement
	(Boom tip + 12.2 m [40′]) Arrangement
10 degrees	H
30 degrees	H + J

J : Additional guy line when the offset angle is 30 degrees

ARRANGEMENT OF GUY LINE IN JIB SIDE

9.1 m (30′) Jib	12.2 m (40′) Jib	15.2 m (50′) Jib	18.3 m (60′) Jib
E	E + F	E + G	E + F + G

KIND OF GUY LINE

Symbol	Diameter : mm (in.)	Length : m (ft. in.)	Part No.	Connector type
E	22 (7/8″)	19.34 (63′ 1/2″)		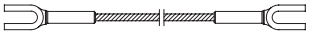
F	22 (7/8″)	5.88 (19′ 3-1/2″)		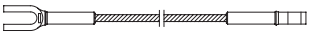
G	22 (7/8″)	11.75 (38′ 6-5/8″)		
H	22 (7/8″)	37.54 (123′ 1-15/16″)		
J	22 (7/8″)	2.44 (8′ 1-16″)		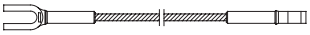

Reference Only

COMBINATION OF CRANE BOOM AND JIB

Boom length m (ft.)	Jib length : m (ft.)				Boom with jib self erecting at side direction	Steel plate
	9.1 (30)	12.2 (40)	15.2 (50)	18.3 (60)		
24.4 (80)	○	○	○	○	○	–
27.4 (90)	○	○	○	○	○	–
30.5 (100)	○	○	○	○	○	–
33.5 (110)	○	○	○	○	○	–
36.6 (120)	○	○	○	○	○	–
39.6 (130)	○	○	○	○	○	–
42.7 (140)	○	○	○	○	○	–
45.7 (150)	○	○	○	○	○	–
48.8 (160)	○	○	○	○	○	–
51.8 (170)	○	○	○	○	○	–
54.9 (180)	○	○	○	○	×	–
57.9 (190)	○	○	○	○	×	Need

○ : Allowed × : Not allowed

Reference Only

5.1.3 HANDLING OF SPREADER GUIDE

1. Draw out guide securing pin and change the spreader guide from the stowed position to work position.
   Then put back the guide securing pin to the original position.

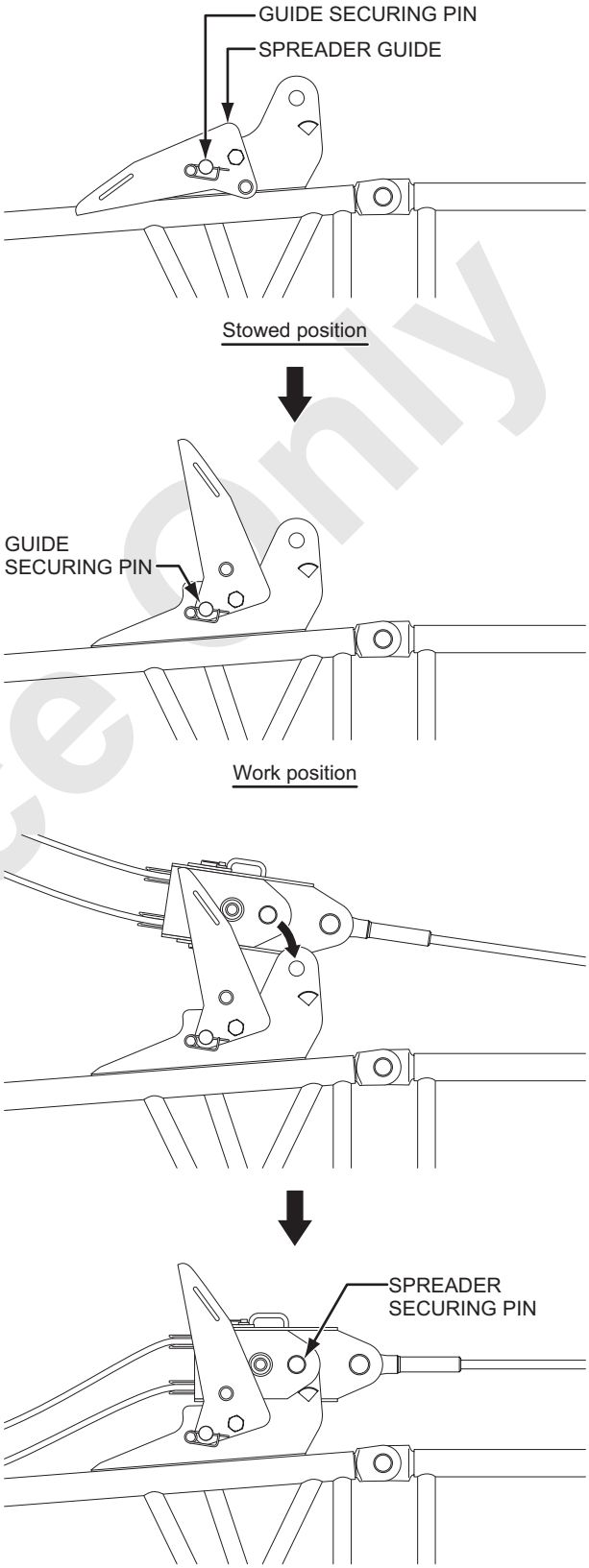

WARNING

Do not insert finger or hand into a pin hole when aligning, inserting or removing pin.
Failure to observe this precaution may result in a serious injury or loss of life.

2. After the boom tip has been grounded, slowly loosen the boom hoist wire rope more.
   The spreader is lowered along the spreader guide.
   When the hole of the spreader is aligned with the pin hole of the bracket on the boom base section, insert spreader securing pin to connect the spreader to the boom base bracket.

WARNING

Do not insert finger or hand into a pin hole when aligning, inserting or removing pin.
Failure to observe this precaution may result in a serious injury or loss of life.

Note

If in case of difficulty to stow the spreader due to incline of it, wind boom hoist wire rope a bit to leave the spreader from the guide and attempt to stow it again.
Move the spreader up and down by mean of shaking the boom hoist wire rope to obtain alignment easier between spreader and lower boom securing holes.

Reference Only

3. When stowing the spreader guide, slowly tighten the boom hoist wire rope.
   When there is a clearance between the spreader and the guide, draw out guide securing pin, and return the guide to the stowed position.

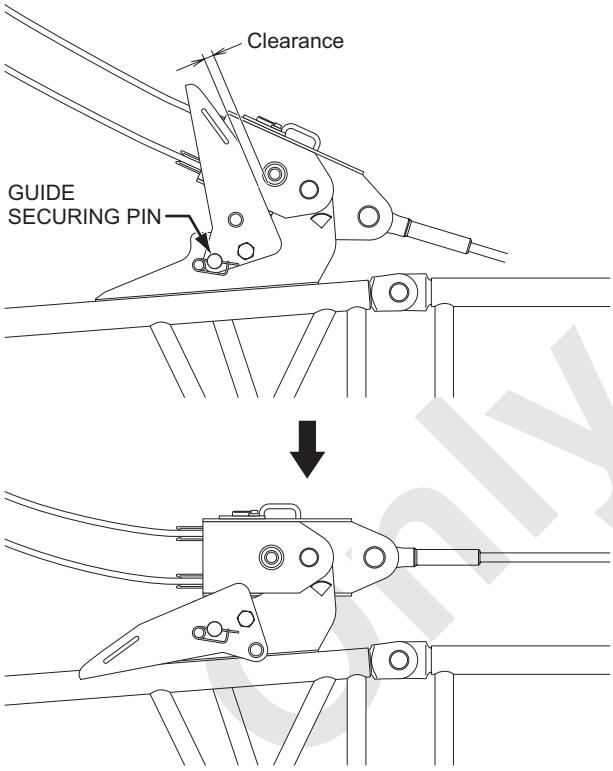

Stowed position

WARNING

Be sure to support the spreader guide with hands, when removing the pin and handling the guide.
Failure to observe this precaution may result in a serious injury or loss of life.

CAUTION

- **When the gantry is in the lowered condition, be sure to set the spreader guide in the stowed position.**
  If left in the work position, the guide could be damaged when raising the boom.
  Failure to observe this precaution may lead to damage the parts.
- **When the gantry is lowered and the upper spreader is connected to the boom base, set the spreader guide in the stowed position.**
  At this time, do not raise the boom higher than 20 degrees.
  If the boom is raised beyond 20 degrees, the boom hoist rope may be damaged.
  Failure to observe this precaution may lead to damage the parts.

Note

Since the clearance would not be made with boom base section only, perform this before the boom disassembly.

Reference Only

4. When boom assembling is completed, remove the spreader securing pin and wind up a boom hoist rope as to the spreader to be sliding on the guide.
   Sudden winding may cause the bending damage of guide due to the spreader may caught with the guide. In case of caught, loosen the rope once and wind the boom control lever manipulates intermittently to rising side so that release from the caught.

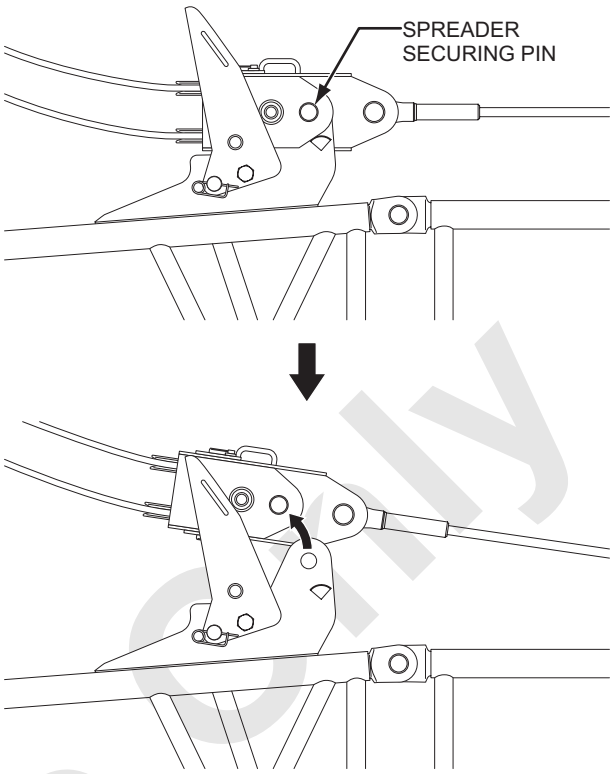

5. Return the spreader guide to stowed position for crane operation.

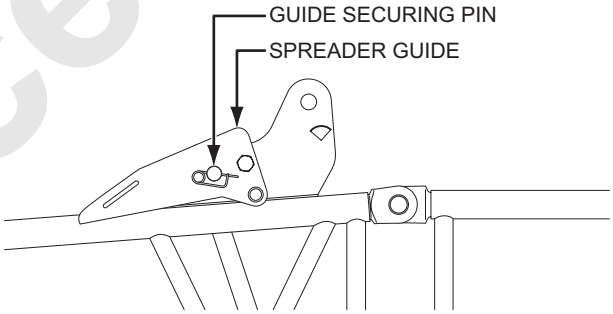

Stowed position

Reference Only

5.1.4 INSTALLING THE BOOM

1. Steel plate

   As for crane specification, when erecting or lowering of the combination of main boom 57.9 m (190 ft.) length and the jib of any length, place steel plates between the ends of the crawlers and the ground as shown.

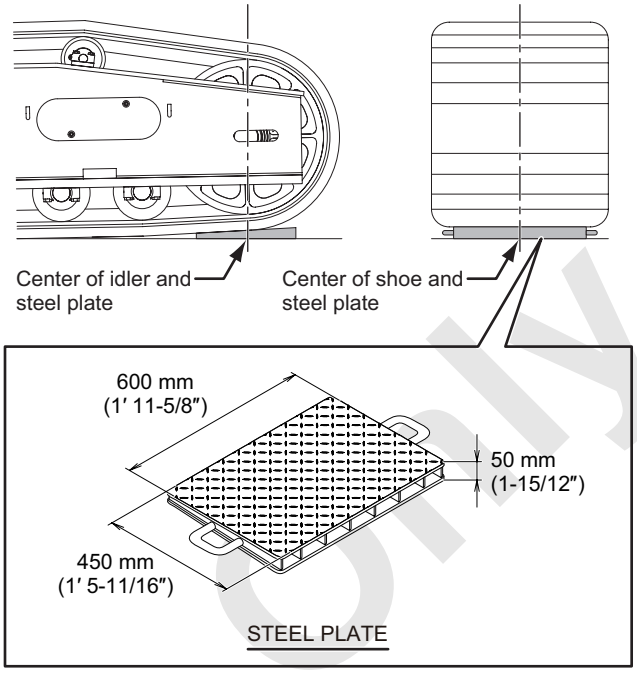

CAUTION

Travel the crane until the idler center comes to the center of the steel plate.

2. Connecting the boom insert

(1) Referring to the boom and guy line configuration chart, prepare the required boom components, careful on top/bottom sides, and place near the boom base section.

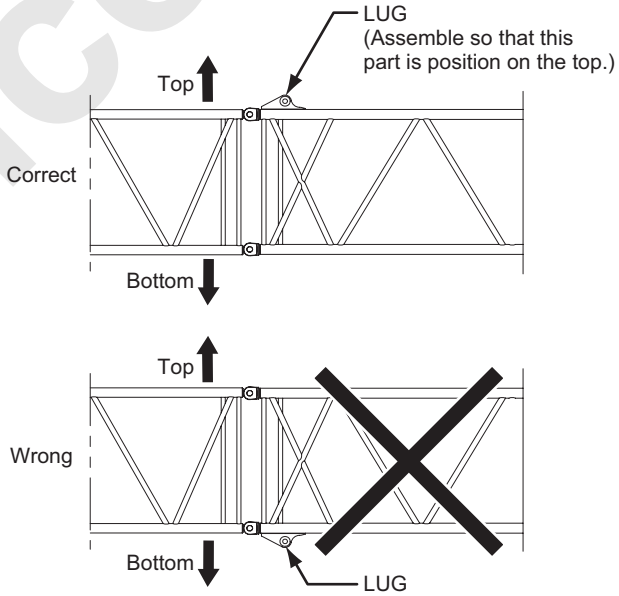

DANGER

Do not stand on, or enter under/inside of the attachment being assembling/disassembling. Failure to observe this precautions may result in a serious injury or loss of life.

CAUTION

When assembling/disassembling the attachment, do not place the attachment direct to the ground. Place a wooden block and place the attachment stably on it.

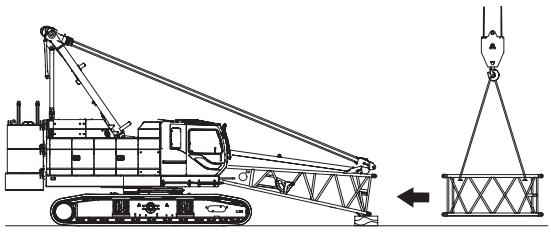

Reference Only

(2) Align the top connecting holes of boom base and boom insert and insert the connecting pin (with flange).
Insert the connecting pin (with flange) should be oriented vertical its pin hole and secure with the spring lock pin.

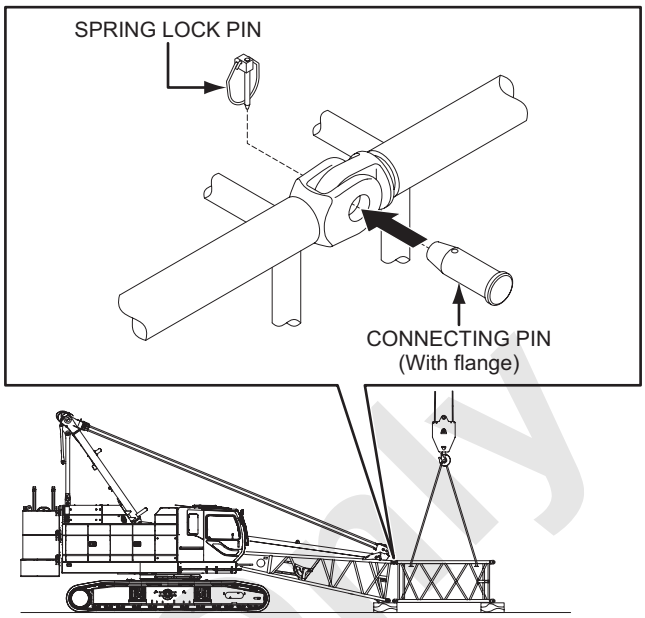

WARNING

Do not insert finger or hand into a pin hole when aligning, inserting or removing pin.
Failure to observe this precaution may result in a serious injury or loss of life.

CAUTION

As to the boom length able to connect with cantilever condition, refer to the article "5.1.5 CAUTION FOR CANTILEVER".

Note

Be sure to tap the connecting pins (with flange) from the outside to the inside.

Reference Only

(3) Align the connecting pin holes of the boom inserts and insert the connecting pin (with flange).
Insert the connecting pin (with flange) should be oriented vertical its pin hole and secure with the spring lock pin.

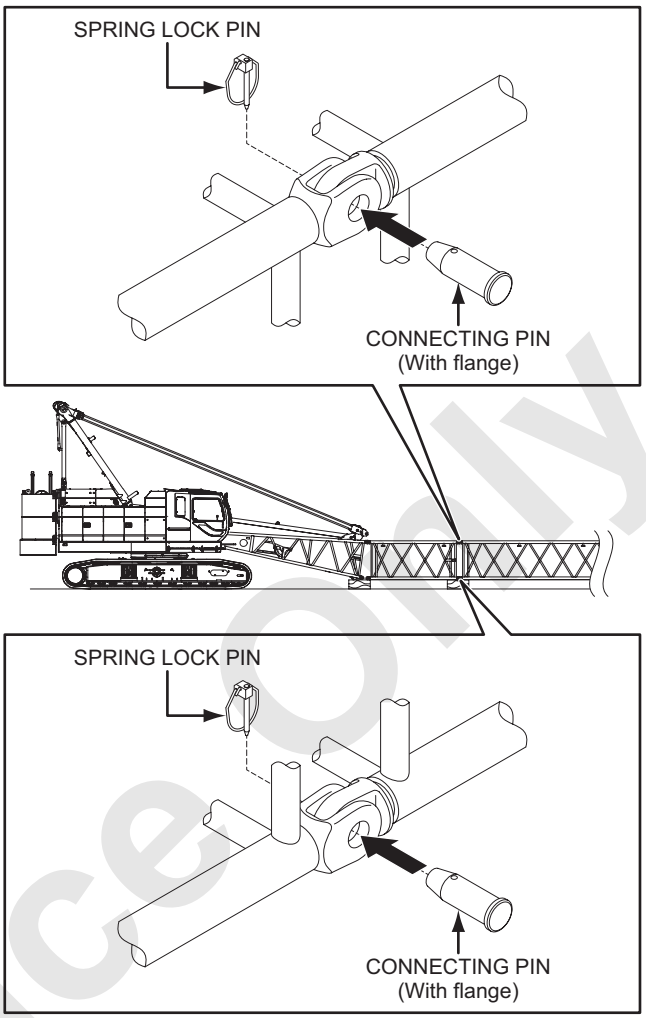

DANGER

Do not stand on, or enter under/inside of the attachment being assembling/disassembling.
Failure to observe this precautions may result in a serious injury or loss of life.

WARNING

Do not insert finger or hand into a pin hole when aligning, inserting or removing pin.
Failure to observe this precaution may result in a serious injury or loss of life.

CAUTION

When assembling/disassembling the attachment, do not place the attachment direct to the ground. Place a wooden block and place the attachment stably on it.

Note

Be sure to tap the connecting pins (with flange) from the outside to the inside.

Reference Only

(4) Referring to boom and guy line arrangement chart, connect the boom inserts in order in the same way.

WARNING

Do not insert finger or hand into a pin hole when aligning, inserting or removing pin.
Failure to observe this precaution may result in a serious injury or loss of life.

CAUTION

When assembling/disassembling the attachment, do not place the attachment direct to the ground. Place a wooden block and place the attachment stably on it.

Note

Be sure to tap the connecting pins (with flange) from the outside to the inside.

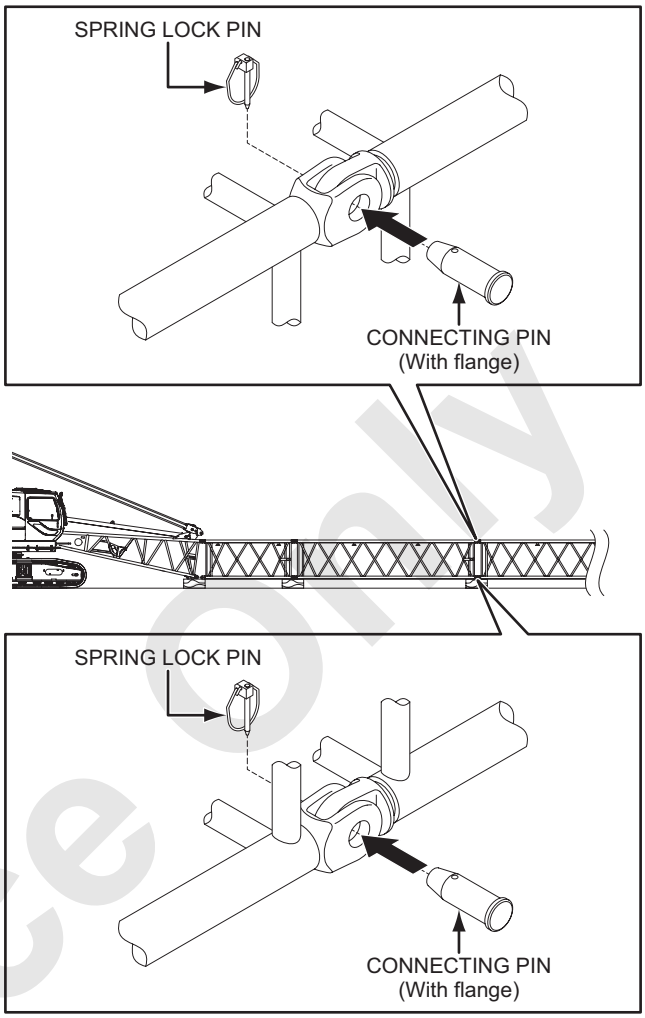

Reference Only

3. Connecting the boom tip

   Align the connecting holes of boom insert and boom tip and insert the connecting pin (with flange).
   Insert the connecting pin (with flange) should be oriented vertical its pin hole and secure with the spring lock pin.

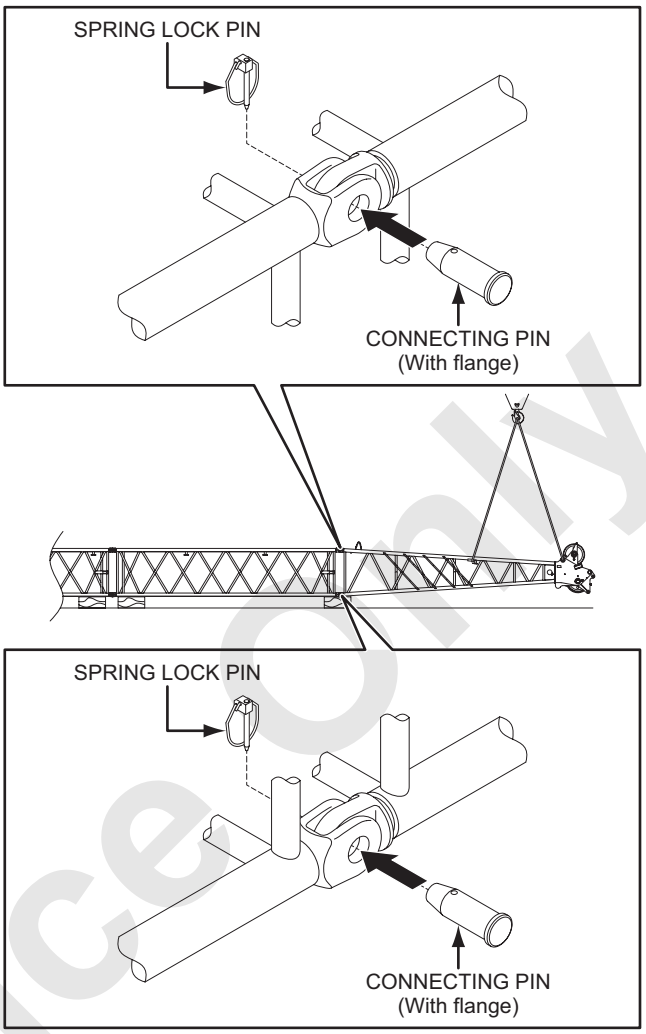

WARNING

Do not insert finger or hand into a pin hole when aligning, inserting or removing pin.
Failure to observe this precaution may result in a serious injury or loss of life.

Note

Be sure to tap the connecting pins (with flange) from the outside to the inside.

Reference Only

4. Connecting the boom base and boom insert

   Lift at the connection part between the boom base and boom insert and insert the connecting pins (double tapered) after align the bottom part of connection holes.
   Insert the connecting pin (double tapered) should be oriented vertical its pin hole and secure with the spring lock pins on both sides.

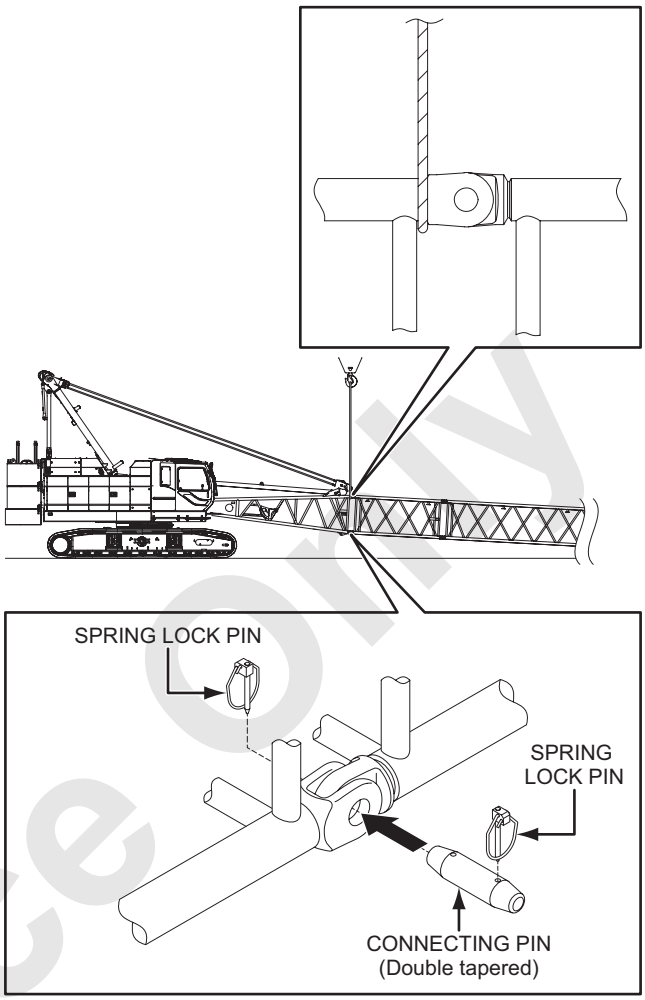

DANGER

Do not stand on, or enter under/inside of the attachment being assembling/disassembling.
Failure to observe this precautions may result in a serious injury or loss of life.

WARNING

Do not insert finger or hand into a pin hole when aligning, inserting or removing pin.
Failure to observe this precaution may result in a serious injury or loss of life.

WARNING

Do not stand in line with the connecting pins (double tapered) being inserted/removed.
The pin may fly out from the pinhole.
Failure to observe this precaution may result in a serious injury or loss of life.

Reference Only

5. Installing the cable rollers

Install the cable rollers to the location as shown in the boom configuration chart.

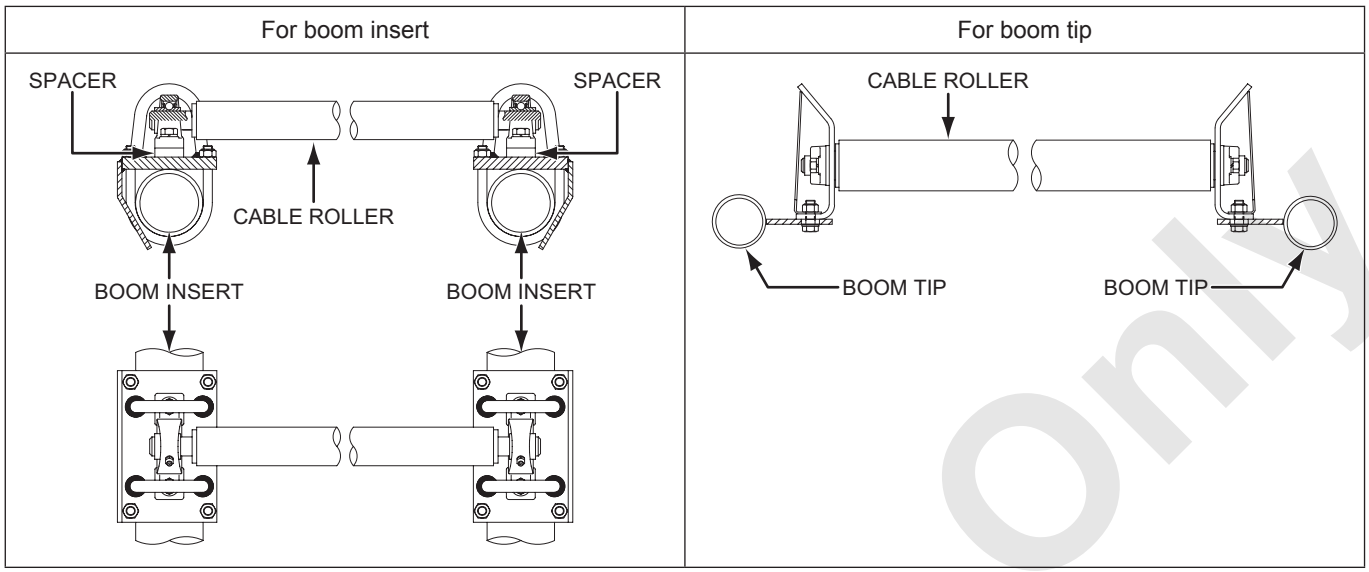

6. Connecting the boom guy lines

(1) Prepare guy line according to the guy line configuration chart.
Insert the guy line connecting pin from the inside.

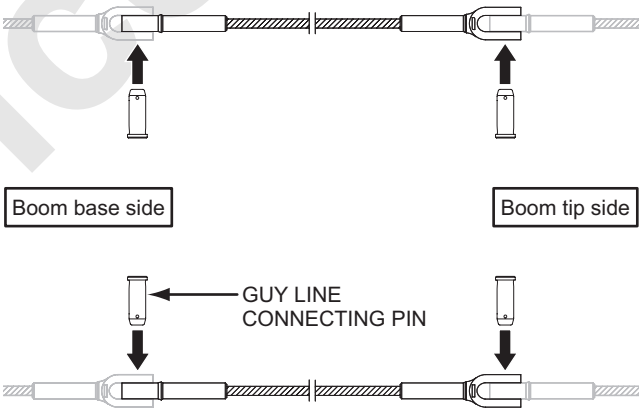

Reference Only

(2) Connect the prepared guy lines starting at the boom tip side to the basic machine side in order.
Do not leave slack on the guy line.
If the guy line is loose the end may not reach the upper spreader.

WARNING

- **When working at a high elevation, be sure to use a safety belt to prevent falling.**
  Failure to observe this precaution may result in a serious injury or loss of life.
- **Use a scaffolding board for working on the attachment.**
  Failure to observe this precaution may result in a serious injury or loss of life.

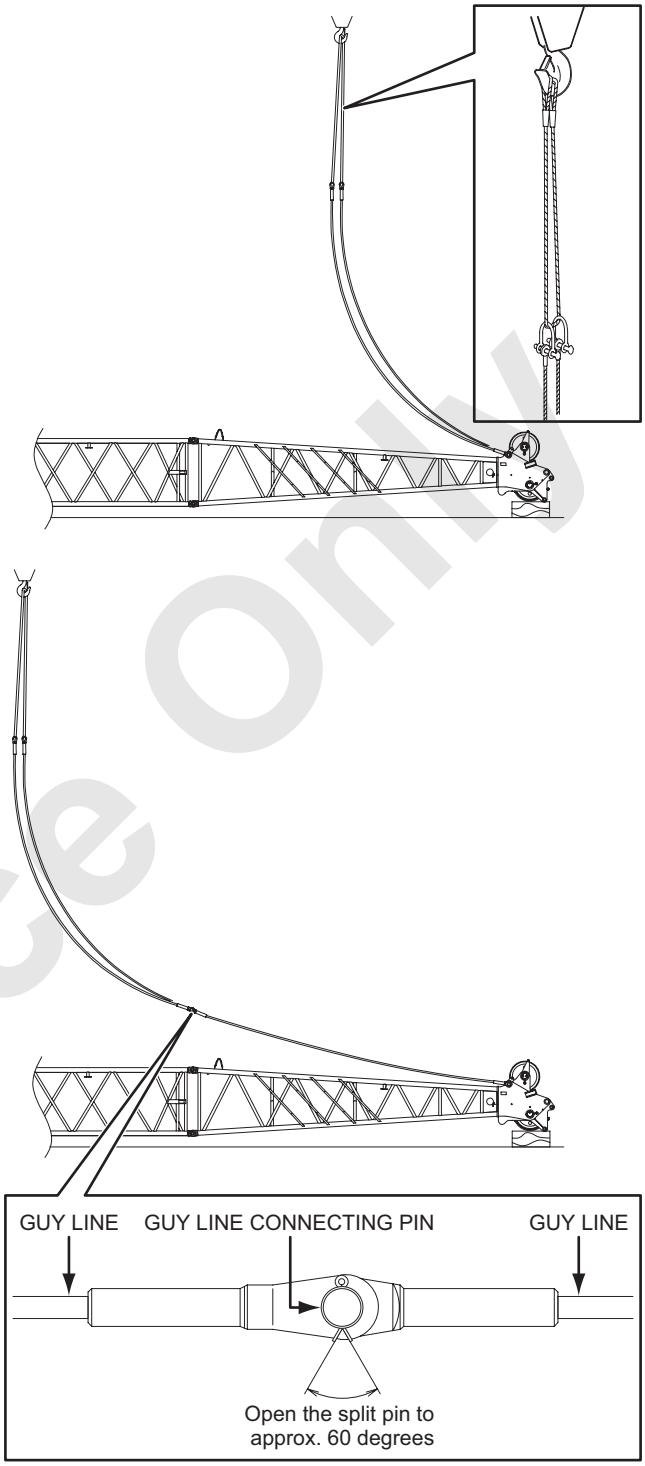

Reference Only

(3) Connect the guy line to the upper spreader.
(4) Loosen the boom hoist wire rope to relieve tension.

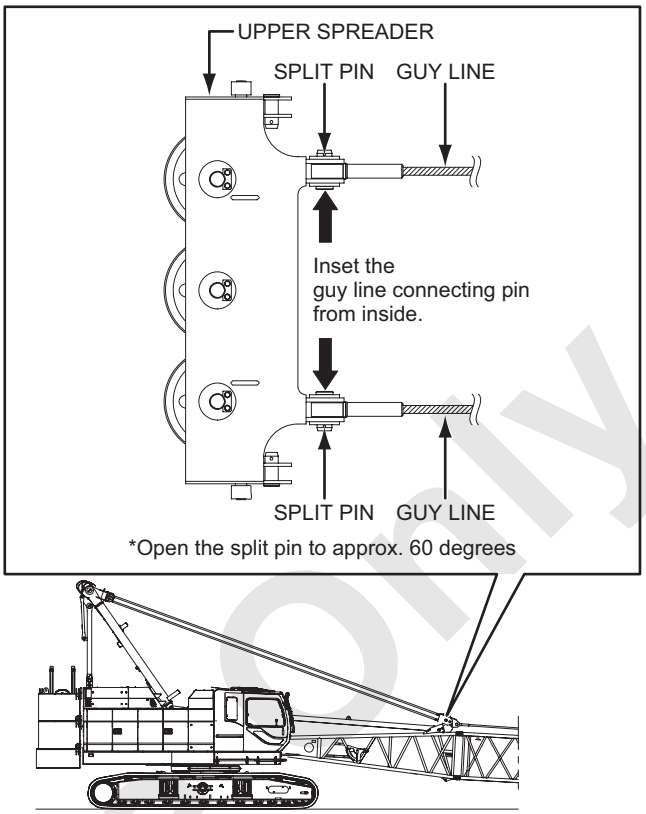

(5) Use the spreader guide to remove the spreader securing pin.

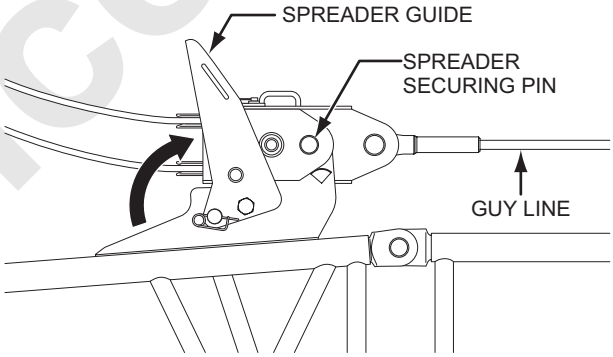

Reference Only

(6) Wind up the boom hoist rope.
Pay attention not making rough spooling on the drum.

WARNING

Place a signal person to prevent accident from rotating drum.
Failure to observe this precaution may result in a serious injury.

WARNING

After the assembly has been completed, be sure to confirm that all connecting pins and split pins are correctly installed.
Failure to observe this precaution may result in a serious injury or loss of life.

Reference Only

5.1.5 CAUTION FOR CANTILEVER

CAUTION

Ensure to work with the gantry is set at "WORK" position and the inching switch should be set in inching position.

The allowable cantilever condition while supporting by the boom base are as follows;

With base boom	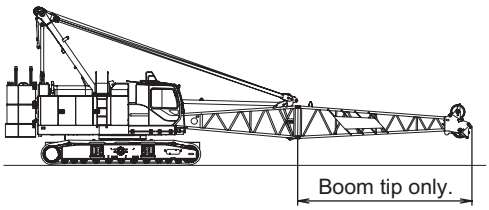
12.2 m (40′) boom insert or less	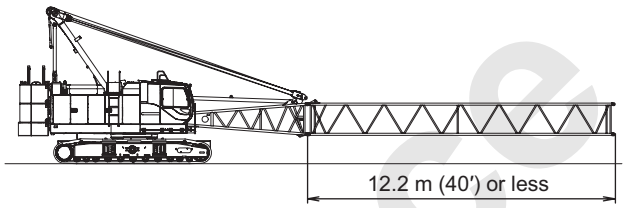

DANGER

Do not perform the hoisting work or travel while the boom is supported with the cantilever.
Failure to observe this precaution may result in a serious injury or loss of life.

Reference Only

5.1.6 FRONT DRUM WIRE ROPE REEVING

WARNING

- **When handling the wire rope, use leather gloves to prevent injury on the fingers or hands.**
  Failure to observe this precaution may result in a serious injury.
- **Take extra care to work on the moving wire rope not to touch the sheave and wire rope to prevent accident of being crushed or being entangled.**
  Failure to observe this precaution may result in a serious injury or loss of life.
- **Place a signal person to prevent accident from rotating drum.**
  Failure to observe this precaution may result in a serious injury.

CAUTION

The hook is to be installed correct direction.
When passing the hoist wire rope to the hook, face the striker (hook side weight catch) contacting the hook overhoist limit switch weight to the boom foot side.

Reference Only

1. Place the hook, overhoist limit switch, weight and socket, near the boom tip.

2. Turn the front drum control lever to lower side to pay out the wire rope to the boom tip.

3. Pass the wire rope through the idler sheave and boom point sheave by referring to the right figure.

* However, in case of the number of reeving is 7 parts of line or more, pass the wire rope through the middle idler sheave and pass it to the auxiliary sheave.
(Refer to the article "HOIST ROPE REEVING IN BOOM POINT AREA".)

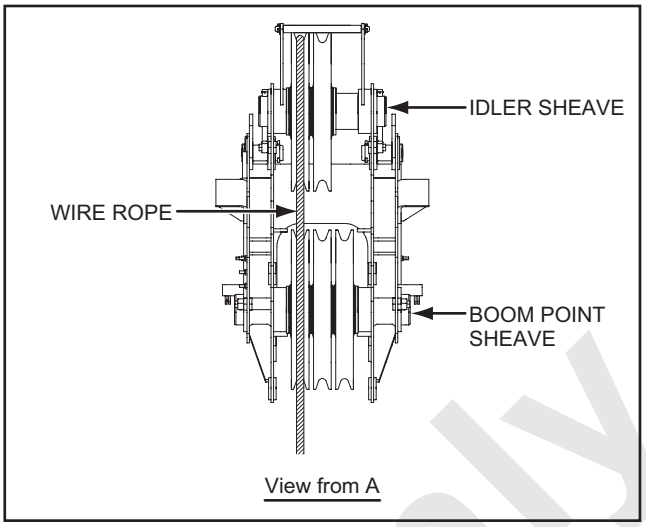

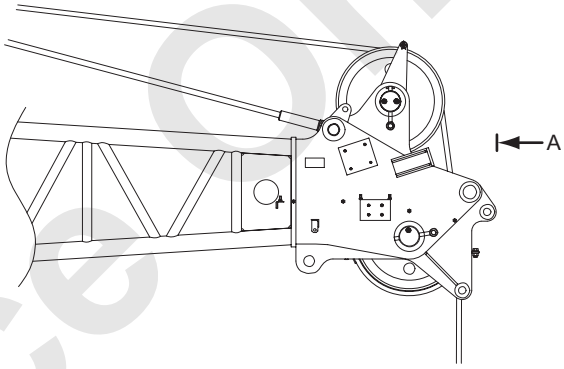

4. Install the overhoist limit switch and weight to the left side bracket on the tip end of the boom. Insert the split pin into the shackle pin to secure it.

5. Pass the front drum wire rope through the hook sheave(s) and boom point sheave(s) in order. Terminate the wire rope end with the rope socket at the boom point for even number part reeving and at the hook for odd number part reeving.
Be sure to pass the wire rope through the hook overhoist limit switch weight.

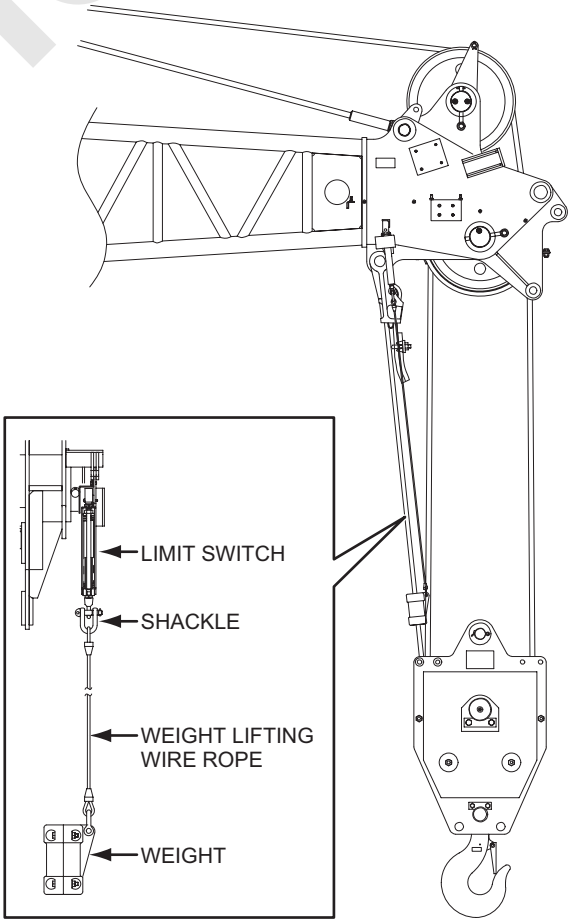

Reference Only

HOIST ROPE REEVING IN BOOM POINT AREA

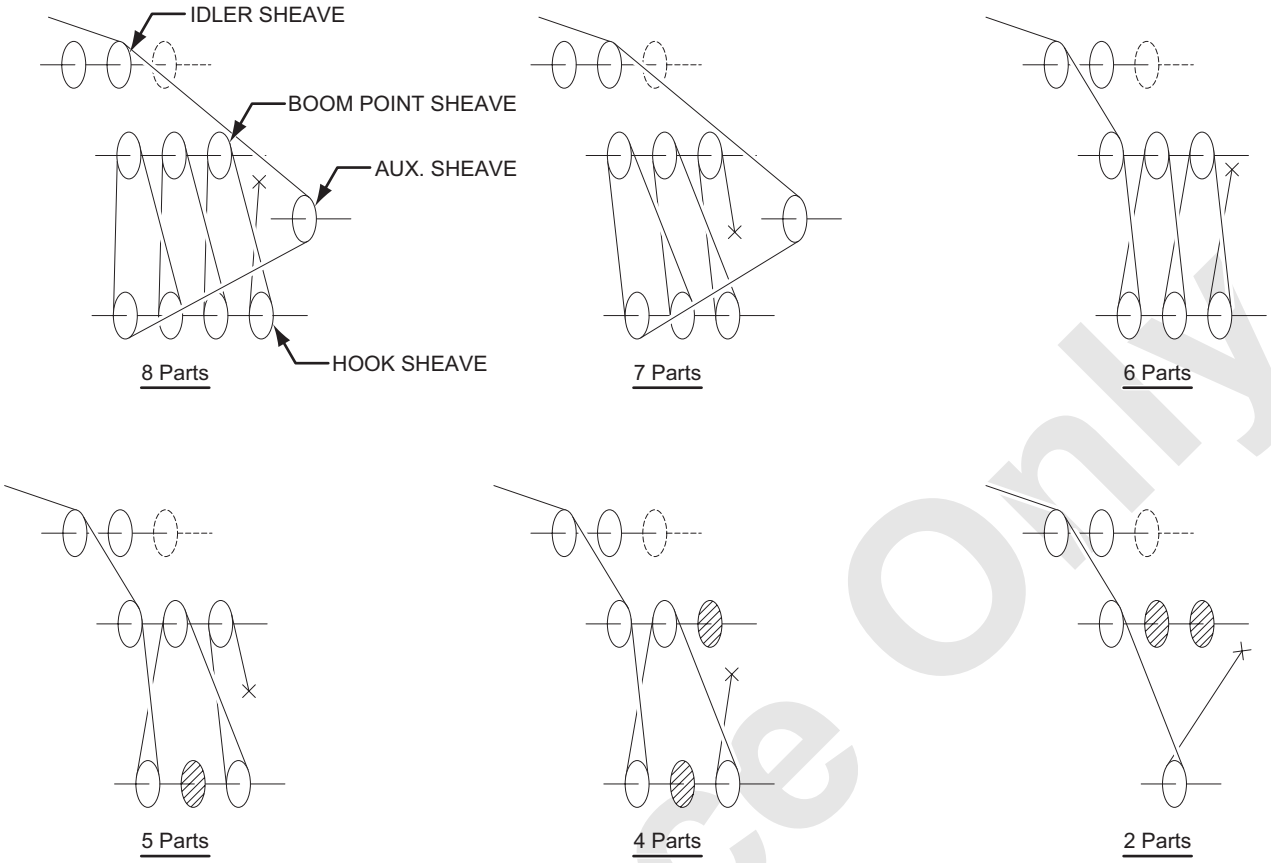

(This figure is view from the boom tip side.)

⚠ CAUTION

When use of 7 and 8 parts of line, require to install the auxiliary sheave block to the boom tip.
As to the installation of auxiliary sheave, refer to the article "5.1.7 INSTALLING THE AUXILIARY SHEAVE" for the detail.

Reference Only

HOOK INSTALLING DIRECTION

When passing the hoist wire rope to the hook, face the striker (hook side weight catch) contacting the hook overhoist limit switch weight to the boom foot side.

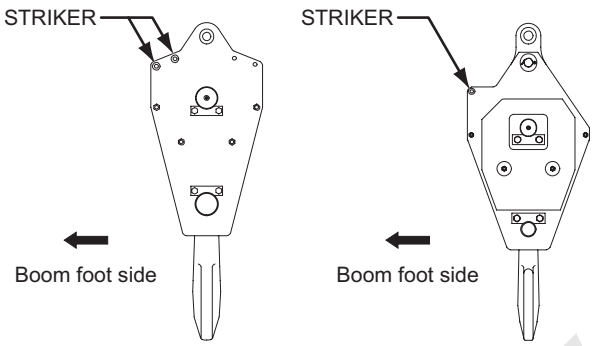

When installing the rope socket to the boom point, pay attention on the side of rope socket.
Be sure to pass the wire rope through the hook overhoist limit switch weight.

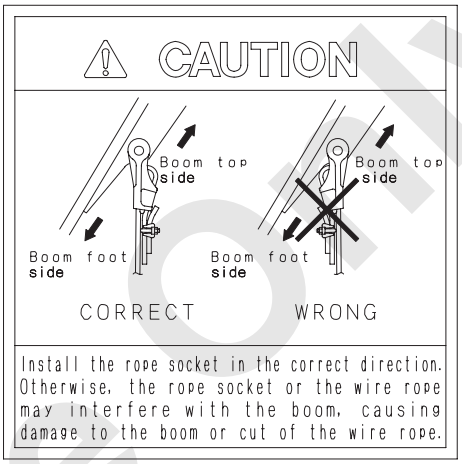

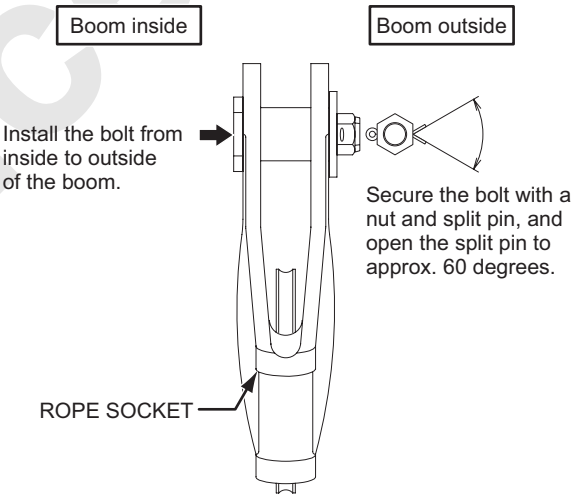

Reference Only

6. Load safety device connection

(1) Secure the junction cables or limit switch wiring to the boom with the hanger.
(2) Connect the attachment wiring to the main machinery junction panel.
(3) Check the connection of load detector connector. (Boom hoist winch plate area)
(4) Connect the cable reel wiring to the boom tip junction panel.
(5) Connect the hook overhoist cable reel connector.
(6) Check the connection of hook overhoist limit switch wiring to the boom tip junction panel.
(7) If needed,place steel plate at the front end the crawlers.

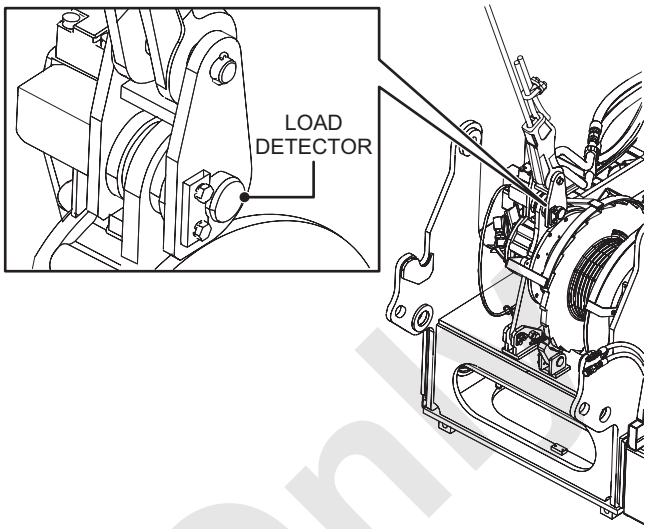

If jib or aux. sheave is not used, connect the hook overhoist limit switch wiring at this time.
For detail of wiring connection, refer to the article “3.3 CONNECTING PROCEDURE OF WIRING”.

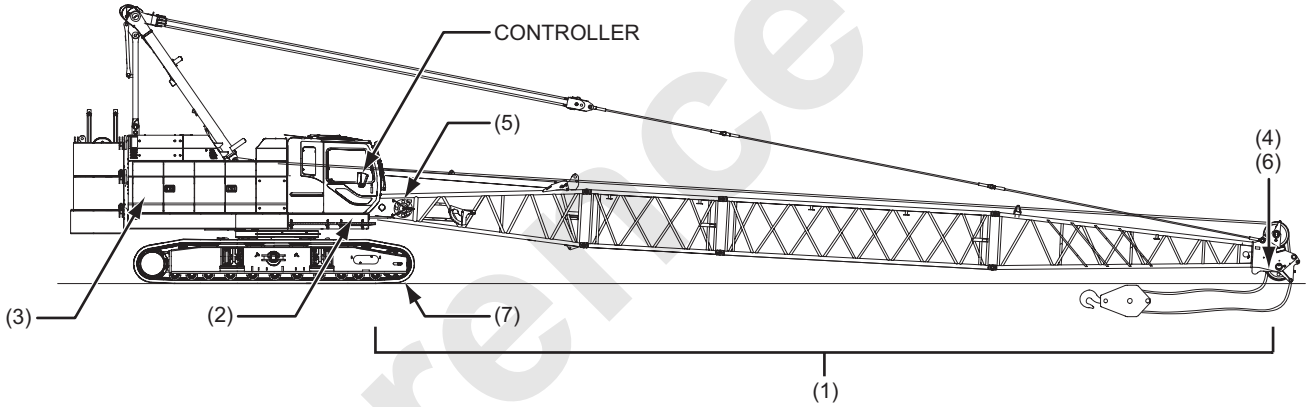

7. Set the crane configuration into the controller (Overload safety device) by referring the article “3.5.1 SETTING OF CRANE CONFIGURATION”.

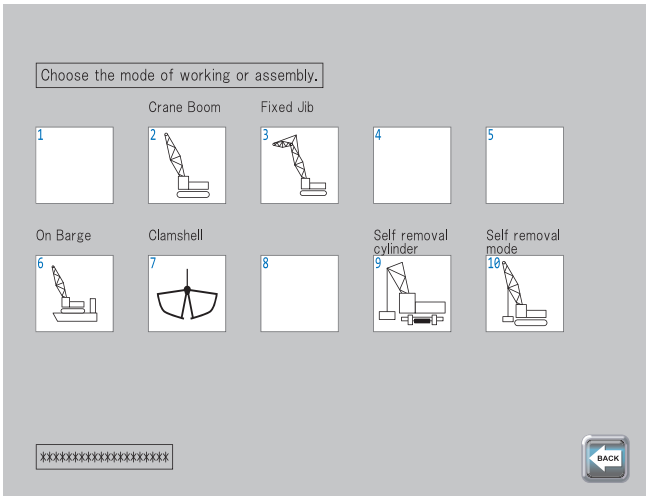

DANGER

Input the crane configuration properly to prevent machine overturning or damage.
Failure to observe this precaution may result in a serious accident.

Type	Type of overhoist	Type of stop	Auto-stop angle
Crane	Boom overhoist	Controller (against ground angle)	Approx. 82 degrees to 82.5 degrees
		Limit switch (against machine angle)	84.5 degrees to 85.5 degrees

Reference Only

5.1.7 INSTALLING THE AUXILIARY SHEAVE

The length of boom in which the auxiliary sheave can be equipped.

STD crane	STD counterweight	12.2 m to 57.9 m (40′ to 190′)
	Reduced counterweight	12.2 m to 54.9 m (40′ to 180′)

Auxiliary sheave weight : 195 kg (430 lbs)

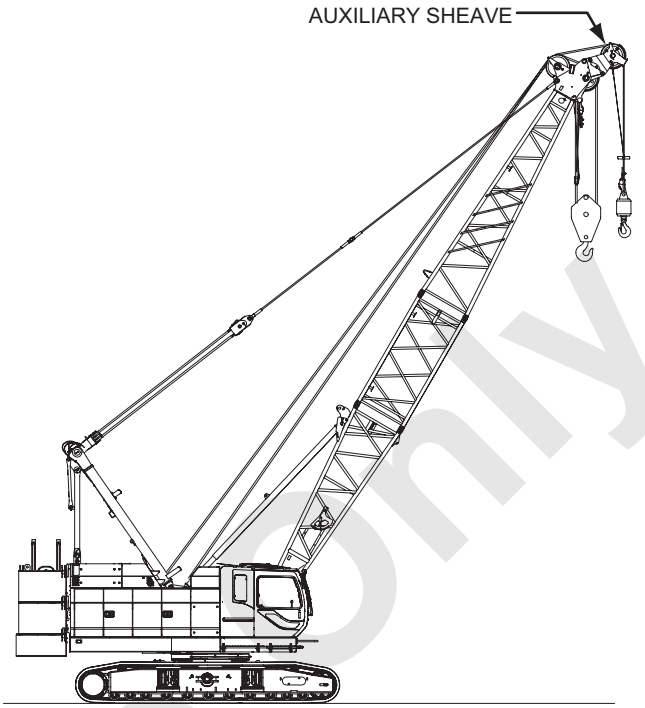

1. Align the holes of boom tip and auxiliary sheave frame.

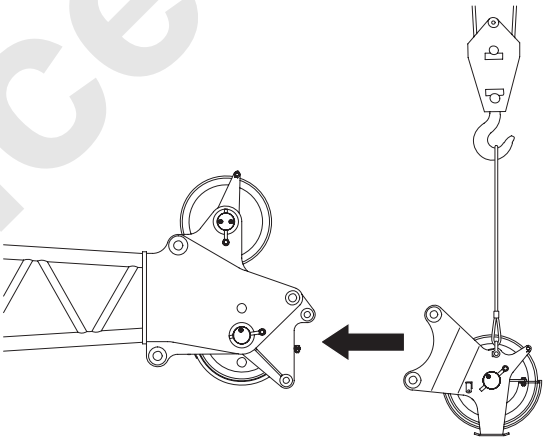

2. Insert the securing pin to secure the auxiliary sheave.
   Insert the spring lock pin in to the securing pin hole.

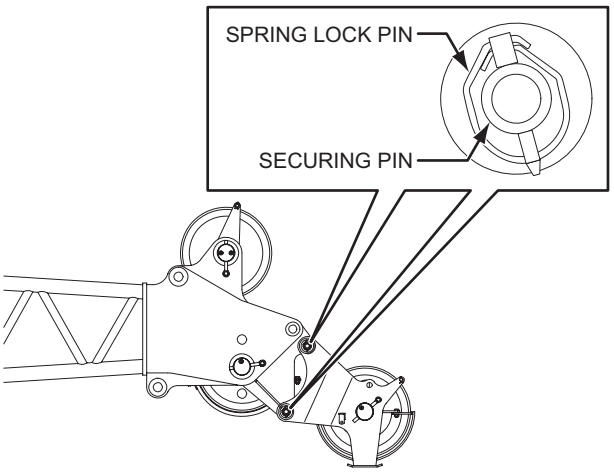

WARNING

Do not insert finger or hand into a pin hole when aligning, inserting or removing pin.
Failure to observe this precaution may result in a serious injury or loss of life.

Reference Only

5.1.8 REAR DRUM WIRE ROPE REEVING TO AUXILIARY SHEAVE

WARNING

- **When handling the wire rope, use leather gloves to prevent injury on the fingers or hands.**
  Failure to observe this precaution may result in a serious injury.
- **Take extra care to work on the moving wire rope not to touch the sheave and wire rope to prevent accident of being crushed or being entangled.**
  Failure to observe this precaution may result in a serious injury or loss of life.

1. Place the ball hook near the tip of the auxiliary sheave.

2. Turn the rear drum control lever to lower side to pay out the wire rope to put through the idler sheave at the boom tip and pass it to the auxiliary sheave.

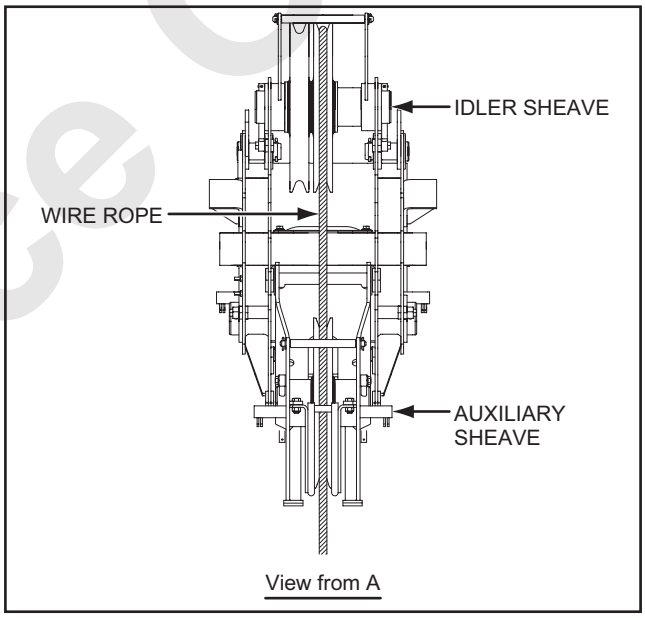

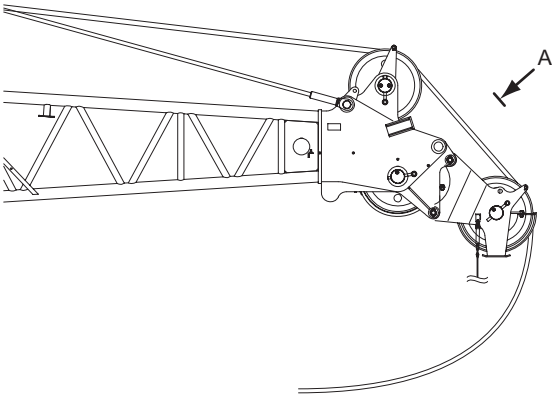

Reference Only

3. Install the overhoist limit switch and weight to the auxiliary sheave.
   Insert the split pin into the shackle pin to secure it.

4. Pass the wire rope through the weight for the hook overhoist limit switch, and secure the rope end to the ball hook with a rope socket.

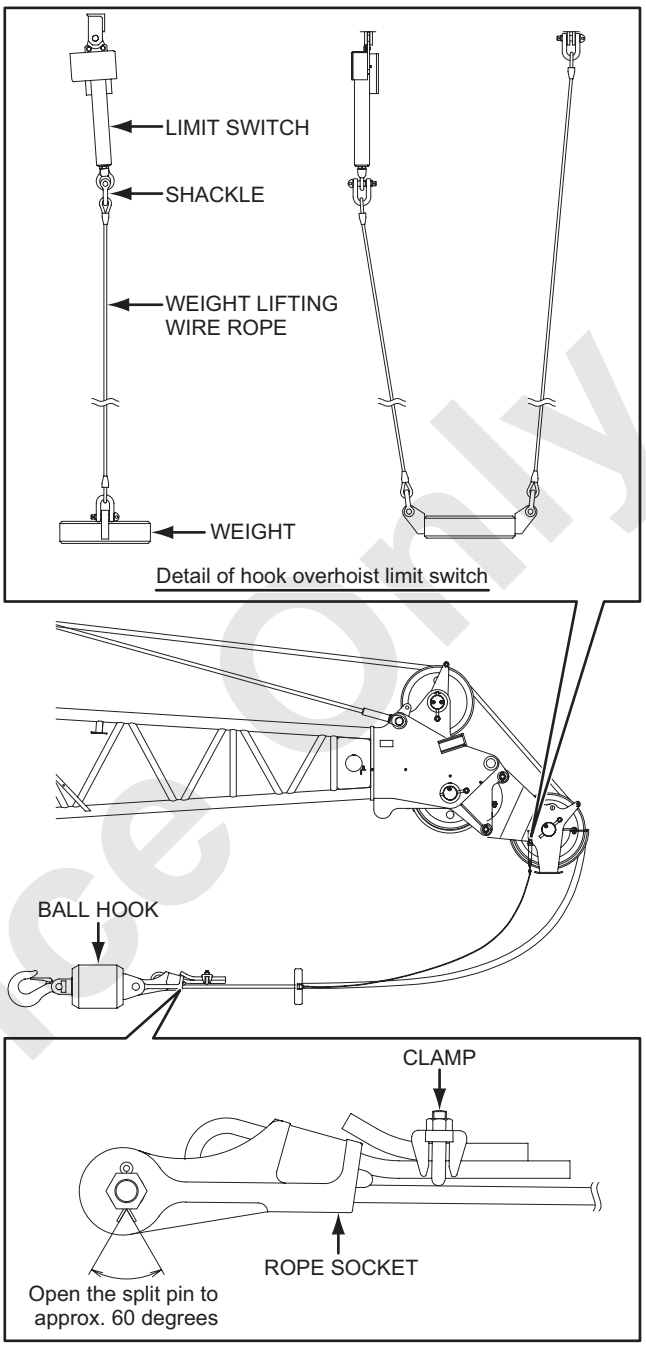

5. Connecting the load safety device

   Connect the auxiliary sheave frame wiring to the boom tip wiring for overhoist limit switch.
   For detail of wiring connection,referring the article “3.3 CONNECTING PROCEDURE OF WIRING”.

Reference Only

6. Set the crane configuration into the controller (Overload safety device) by referring the article “3.5.1 SETTING OF CRANE CONFIGURATION”.

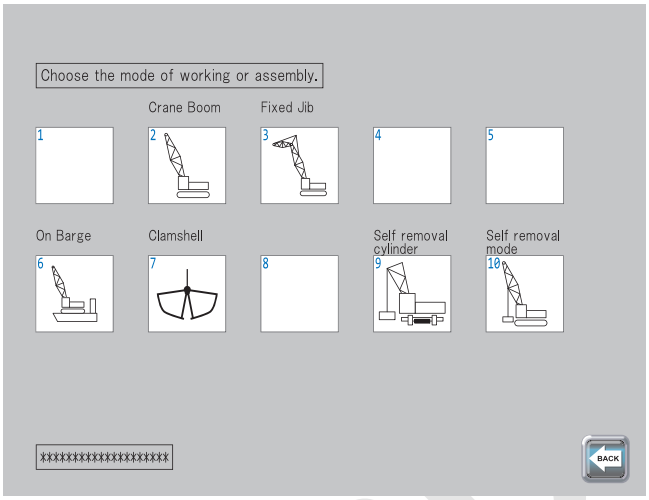

DANGER

Input the crane configuration properly to prevent machine overturning or damage.
Failure to observe this precaution may result in a serious accident.

CAUTION

Ensure to confirm the functioning of the overload prevention device, as for the details of how to confirm, refer to “3.10.1 CHECK BEFORE ERECT THE BOOM AFTER ASSEMBLY OF THE ATTACHMENT”.

Reference Only

5.1.9 ASSEMBLING THE FIXED JIB

As to the jib and jib guy line arrangement, refer to the article "5.1.2 BOOM AND GUY LINE ARRANGEMENT". The boom length in which the jib can be installed is 24.4 m (80 ft.) to 57.9 m (190 ft.).

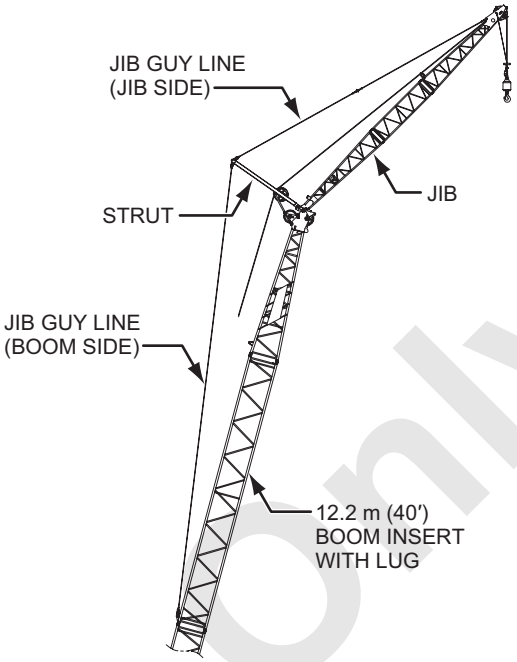

DANGER

Do not stand on, or enter under/inside of the attachment being assembling/disassembling.
Failure to observe this precautions may result in a serious injury or loss of life.

1. Assemble jib and strut on the extension line of the boom tip.

   Align the top and bottom connection parts and insert the connecting pins (with flange).
   Insert the connecting pin (with flange) should be oriented vertical its pin hole and secure with the spring lock pin.

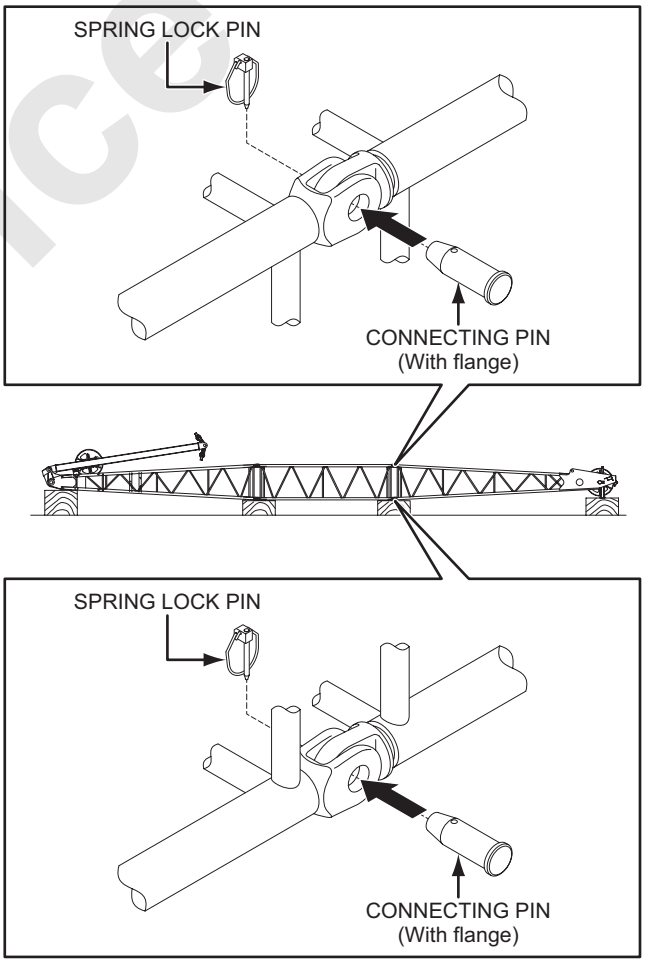

WARNING

Do not insert finger or hand into a pin hole when aligning, inserting or removing pin.
Failure to observe this precaution may result in a serious injury or loss of life.

Note

Be sure to tap the connecting pins (with flange) from the outside to the inside.

Reference Only

2. Lift up the pre-assembled jib with an assist crane and connect it to the boom point.

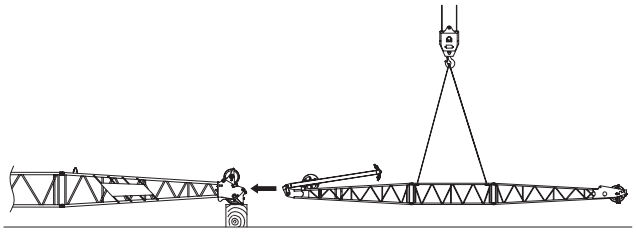

3. Prepare the jib guy lines.
   (The jib side and boom side)

   Insert the guy line connecting pins from outside.

- The length of the jib guy line of the jib side varies according to the jib length.
- The length of the jib guy line of the boom side varies according to the jib offset angle (10 degrees or 30 degrees).

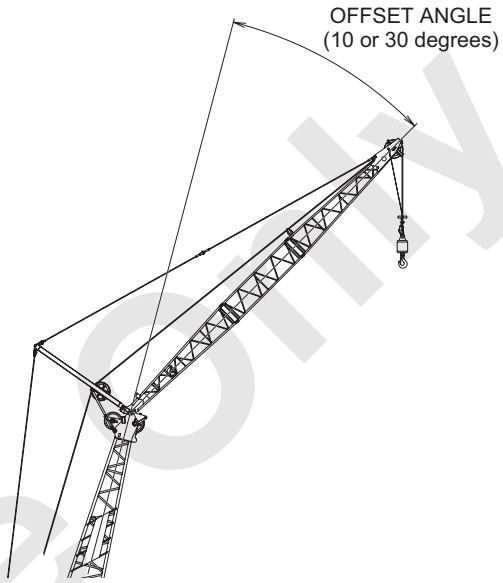

4. Temporarily remove the equalizer sheave of the jib strut, and put the jib guy line through the sheave.
   Reinstall the sheave back to the original position.
   (Keep the strut down.)

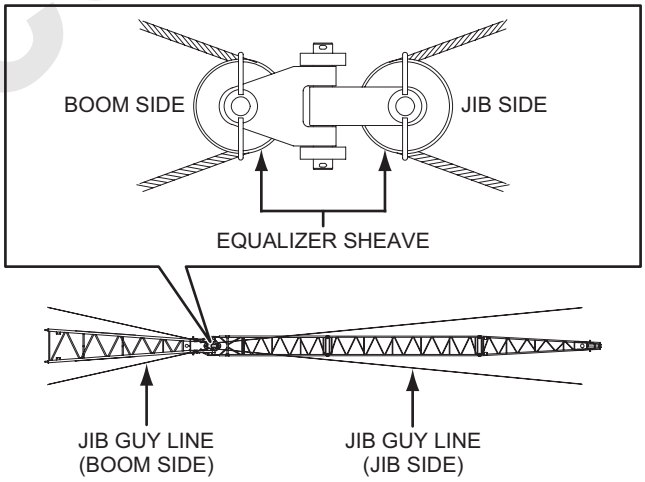

Note

Do this work by two persons.

5. Connect both ends of the jib guy line to the top end of the jib.

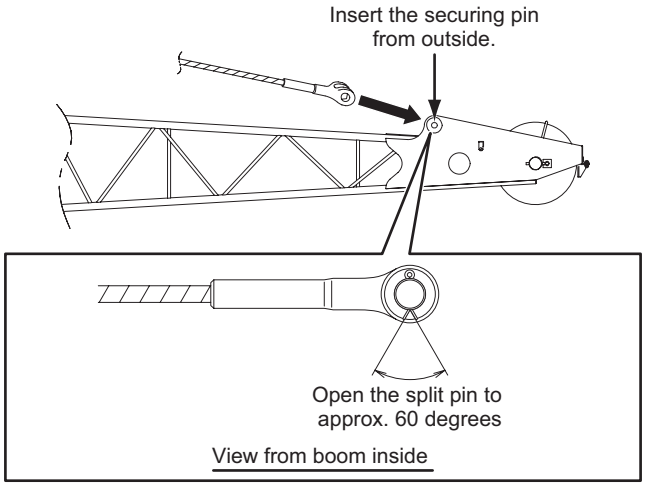

Reference Only

6. Raise the strut with the assist crane and install the strut backstop.

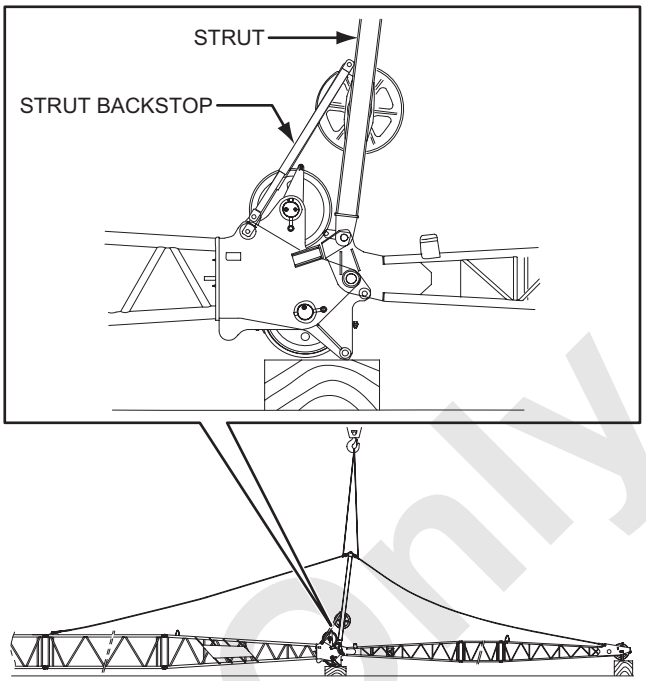

7. By holding the jib strut, connect the both ends of the boom side jib guy line to the lug on the boom insert.
   The guy line connection pins must be inserted from outside to inside and be secured with the split pins.
   Open the split pins to approx. 60 degrees.

8. Remove the sling wire rope from the jib strut.

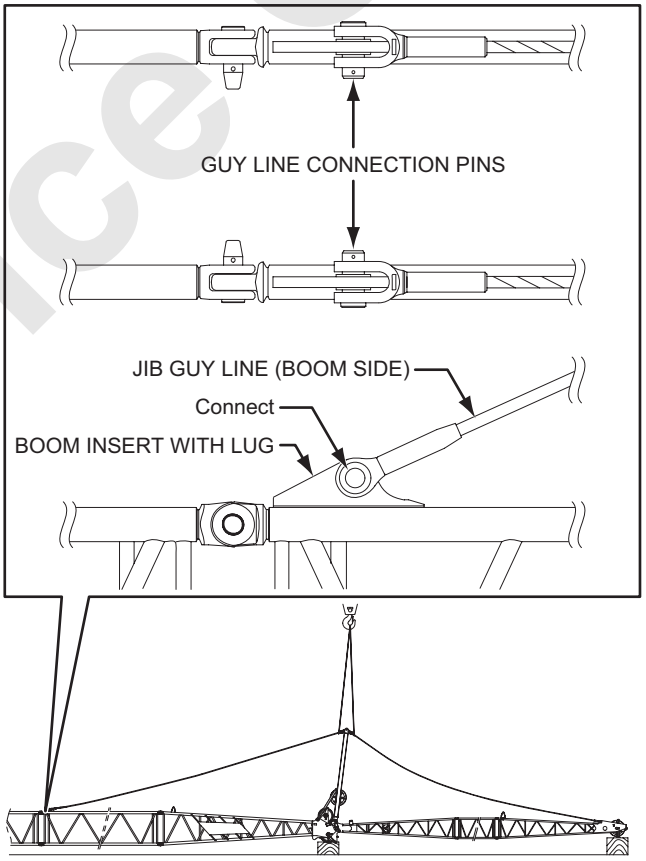

WARNING

After the assembly has been completed, be sure to confirm that all connecting pins and split pins are correctly installed.
Failure to observe this precaution may result in a serious injury or loss of life.

Reference Only

5.1.10 REAR DRUM WIRE ROPE REEVING TO THE FIXED JIB

WARNING

- **When handling the wire rope, use leather gloves to prevent injury on the fingers or hands.**
  Failure to observe this precaution may result in a serious injury.
- **Take extra care to work on the moving wire rope not to touch the sheave and wire rope to prevent accident of being crushed or being entangled.**
  Failure to observe this precaution may result in a serious injury or loss of life.

1. Place the hook near the jib tip.

2. Turn the rear drum control lever to lowering side to pay out the wire rope to put through the idler sheave at the strut and pass it to the jib point sheave.

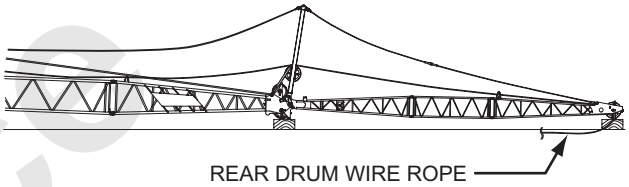

3. Install the hook overhoist limit switch and weight to the jib point section.
   Insert the split pin into the shackle pin to secure it.

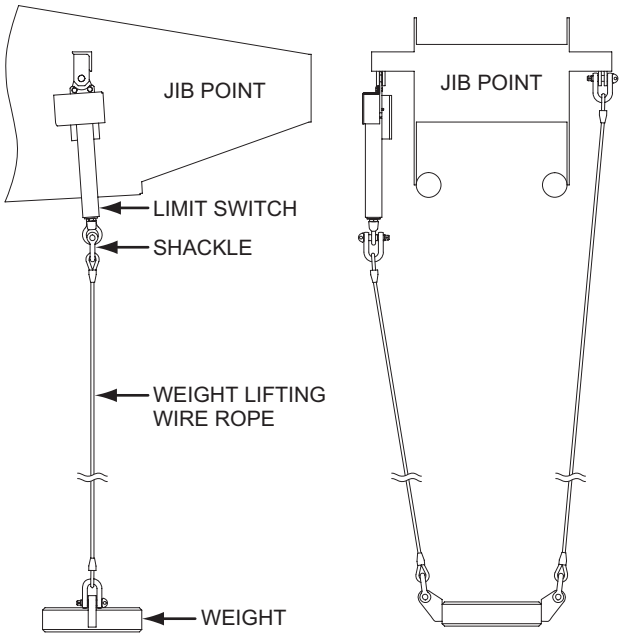

Reference Only

4. Pass the wire rope end though the weight for the limit switch, and secure the end to the hook by the rope socket with the bolt, nut and pin.

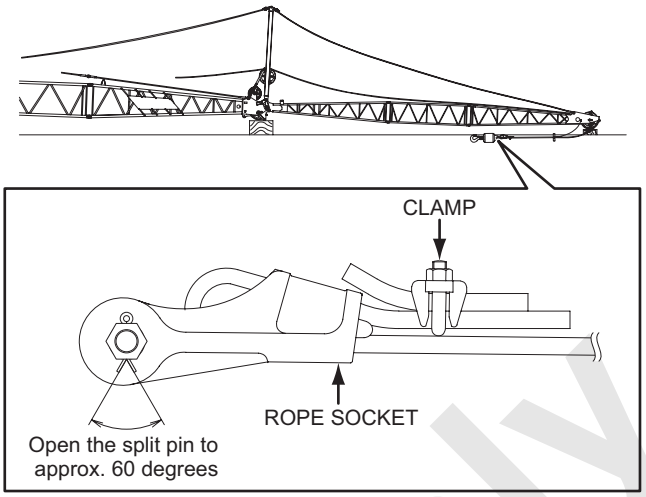

5. Refer to the article “3.3 CONNECTING PROCEDURE OF WIRING”, connect the wiring for jib hoist hook overhoist limit switch.

WARNING

After the assembly has been completed, be sure to confirm that all connecting pins and split pins are correctly installed.
Failure to observe this precaution may result in a serious injury or loss of life.

6. Connecting the load safety device

- Connect a junction cable to the jib cable reel from boom tip junction panel and wiring of jib cable reel wiring connect to the jib hook overhoist limit switch.
- Connect the jib angle meter wiring to the boom tip junction panel.
  For detail of wiring connection, refer to the article “3.3 CONNECTING PROCEDURE OF WIRING”.

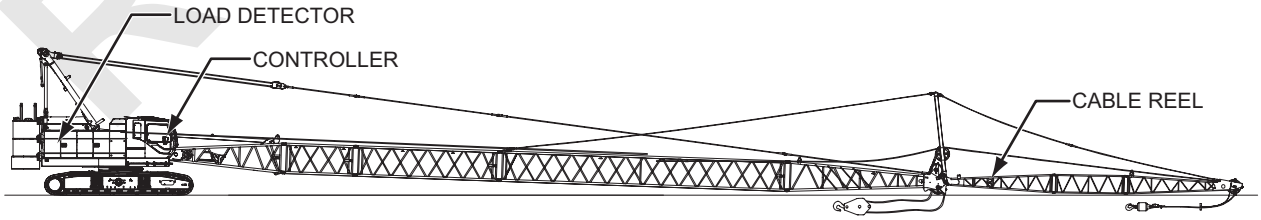

Reference Only

7. Set the crane configuration into the controller (Overload safety device) by referring the article “3.5.1 SETTING OF CRANE CONFIGURATION”.

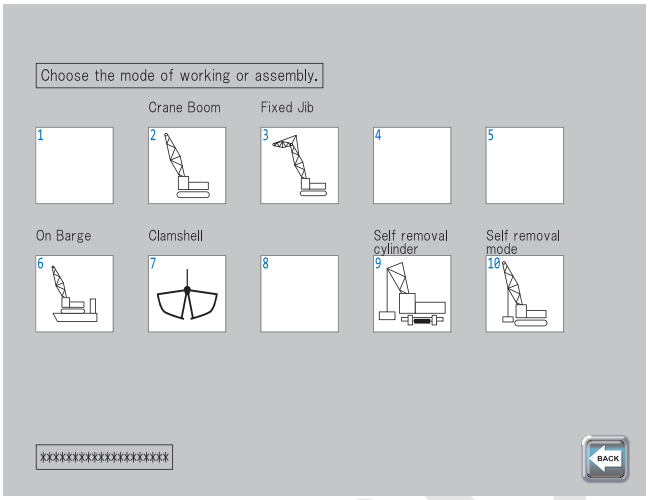

DANGER

Input the crane configuration properly to prevent machine overturning or damage.
Failure to observe this precaution may result in a serious accident.

CAUTION

Ensure to confirm the functioning of the overload prevention device, as for the details of how to confirm, refer to “3.10.1 CHECK BEFORE ERECT THE BOOM AFTER ASSEMBLY OF THE ATTACHMENT”.

Reference Only

5.1.11 FUNCTION CHECK OF EACH LIMIT SWITCH

WARNING

Position all control levers to the neutral and check safety around the machine before starting the engine.
Even if each control levers are not in neutral position, the engine can start.
However each motion can't work without positioning the control lever to neutral once.

1. Start the engine.

2. Check the function of the limit switch for the front, rear drum hook and boom overhoist.

   For the detail of checking method, refer to the article "3. LOAD SAFETY DEVICE".
   If any of overhoist limit switch or striker shows damage, deformation, looseness, or deviated from angle indication or parts replaced, readjustment is necessary.
   Contact authorized Manitowoc service provider.

Reference Only

5.2 ERECTING THE ATTACHMENT

5.2.1 CONFIRMATION BEFORE ERECTING THE ATTACHMENT

Check the following items, and confirm that there is no abnormality, then erect the boom.

(1) Preoperational check completed.
(2) Lubrication to the required part of the attachment performed.
(3) Crawlers are in fully extended position.
(4) Wire ropes have reeved correctly.
(5) No tools or articles left on the attachment.
(6) Off limit signs posted at surrounding area of the attachment.
(7) Wiring for the front and rear drum hook and boom overhoist limit switches connected properly.
(8) Limit switch (es) functions.
(9) Load safety device correctly wired.
(10) Proper crane configuration data set.
Proper hook mode selected.
(11) Travel motor set to rear side.
(12) For the configuration of main boom of 57.9 m (190 ft.) length and the jib of any length, place the steel plates at front end of the crawlers.

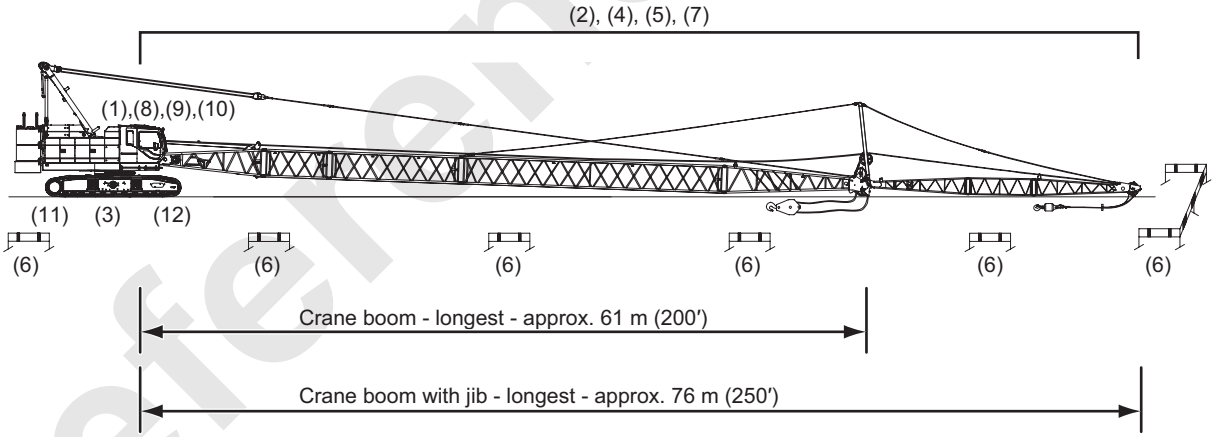

Reference Only

5.2.2 ERECTING THE ATTACHMENT

DANGER

Do not stand or work under, inside or on the boom structure to prevent accident due to sudden fall of the attachment.
Failure to observe this precaution may result in a serious injuries or loss of life.

WARNING

To prevent from being dragged or struck by sudden moving hook, stay off from the hook when the attachment is erected.
Failure to observe this precaution may result in a serious injury or loss of life.

1. Cautions when erecting

(1) Erecting of the attachment must be performed in the front direction of the crawler.
(2) Keep the hook block on the ground until the machine get into working range.
(3) Operation must be performed at a low speed. Sudden movement must be avoided.
(4) Prevent the wire rope from catching and kink in the tip of the boom and jib.

2. Release the drum lock(s) on which the hook is attached.

3. Operate the boom hoist control lever toward the RAISING side to raise the boom slowly.

4. Paying close attention to catching and kink of the hoist wire rope, raise the hook.

5. Remove the steel plates when enter to the working range.

Reference Only

6. Before starting actual work, confirm the following items.

(1) When the hook is hoisted to strike against the weight of the hook overhoist limit switch, the hoisting motion must be auto-stopped.

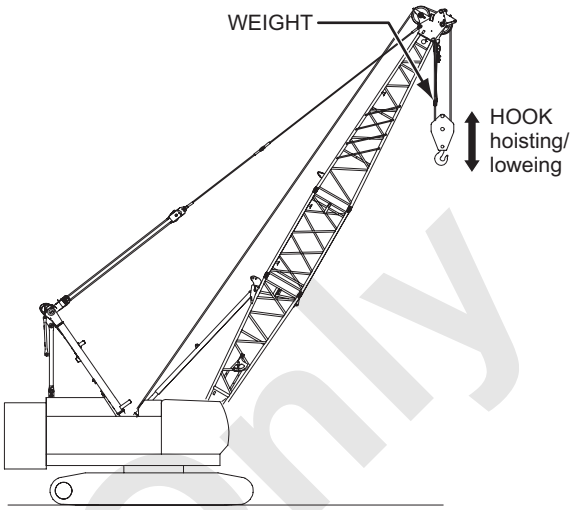

(2) When the boom is raised to approx. 82 degrees of boom angle, the boom raising must be auto-stopped.

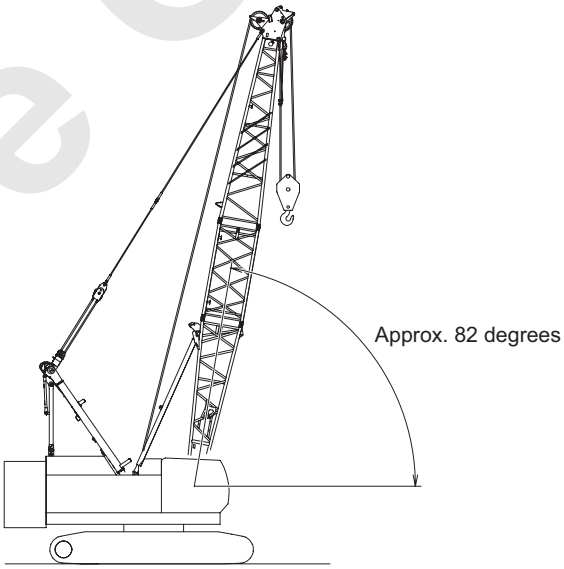

(3) If it is difficult to test auto-stop function due to overload by lifting the actual load, check can be done in the display.
Perform this test in “WORK” position.
The test will not work in assembly/disassembly mode.

Press MENU icon to indicate menu and then CHECK press.

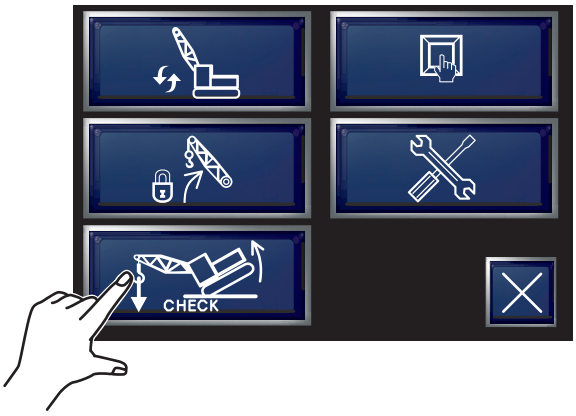

Reference Only

(4) Press OFF icon.

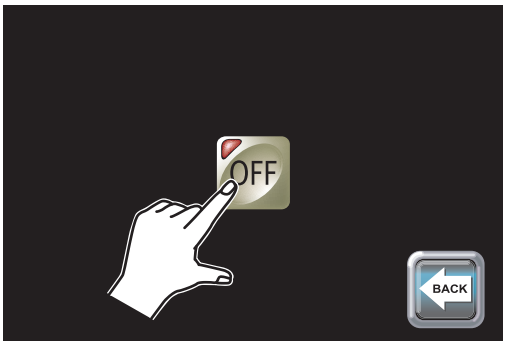

(5) The crane turns to the simulated overload condition and auto-stop occurs.
(Overload check mode)
Check to see that the hook hoisting or boom lowering can't be done.
During check mode, message [ME056] appears in the message area.

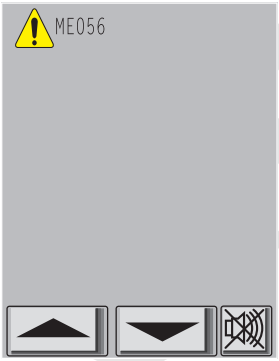

(6) After the check, press ON icon to cancel the check mode and is completed.

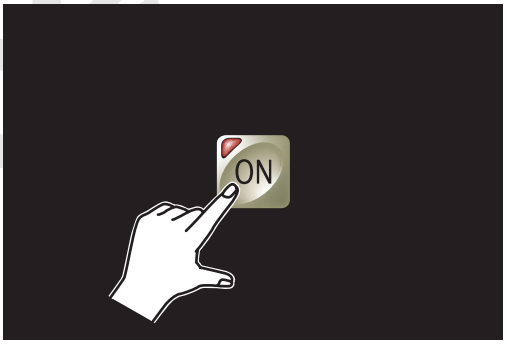

Reference only

5.2.3 CONFIRMATION BEFORE LOWERING THE ATTACHMENT

When lowering the attachment, observe following items;

1. Lowering of the attachment must be performed in the front direction of the crawler.

2. Steel plate

   As for crane specification, when erecting or lowering of the combination of main boom 57.9 m (190 ft.) length and the jib of any length, place steel plates between the ends of the crawlers and the ground as shown.

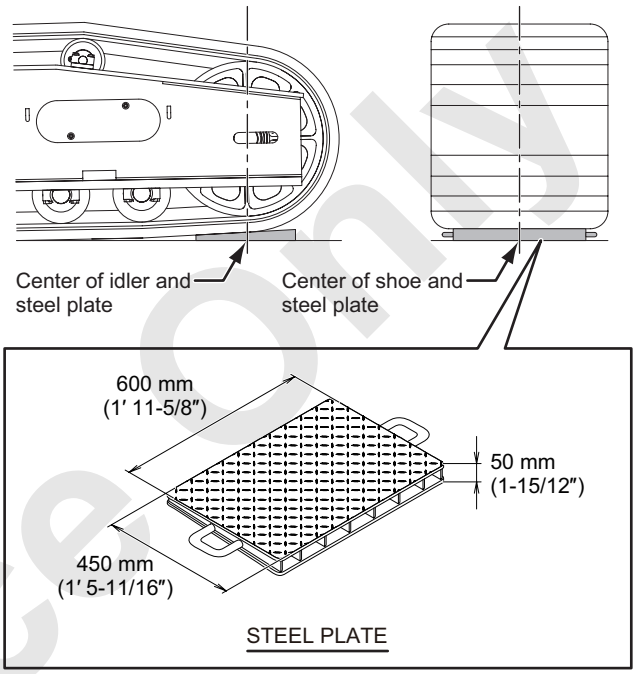

CAUTION

Travel the crane until the idler center comes to the center of the steel plate.

3. Lower the hook block on to the ground when the machine get into out of working range.

4. Operation must be performed at a low speed. Sudden movement must be avoided.

5. Prevent the wire rope from catching and kink in the tip end of the boom and jib.

DANGER

Do not stand or work under, inside or on the boom structure to prevent accident due to sudden fall of the attachment.
Failure to observe this precaution may result in a serious injuries or loss of life.

Reference Only

5.2.4 LOWERING THE ATTACHMENT

1. Lower the boom at a low speed.

2. When the boom angle exceeds the working area, boom lowering is automatically stopped, and the warning alarm sounds.

3. Lower the hook onto the ground.

4. Return the control lever to neutral then press (boom/jib lowering icon) on the screen for 1 second.
   The automatic stop will be released.
   Lower the boom further.

5. The crane enters to the boom lowering mode and the auto-stop due to low boom angle is released to continue lowering the boom.
   However, when the weight of hook overhoist switch contacts the ground, the auto-stop occurs again due to hook overhoist preventive device.

   To lower the boom further, return the control lever to neutral then press (assy/disassy icon) for 1 second.

   Now the crane enters to the assy/disassy mode and the auto-stop due to hook overhoist is released to continue lowering the boom.
   Operate with care because the hook overhoist automatic stop does not function in the assy/disassy mode.

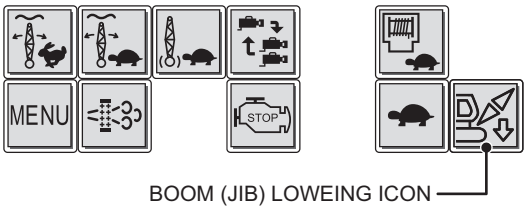

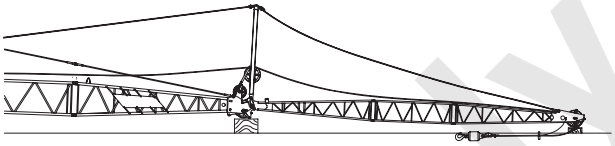

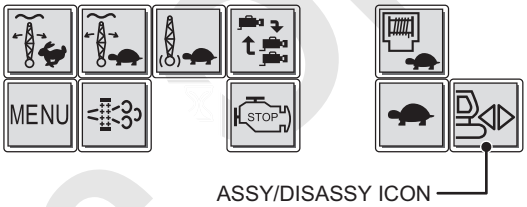

Note

Press (assy/disassy icon), (boom, jib lowering icon) for more than 1 second.

Reference Only

5.3 DISASSEMBLING THE ATTACHMENT

When disassembling the crane attachment, press (assy/disassy icon) for 1 second.
Then, the load safety device enters the assy/disassy mode, and the automatic stop functions are disable.

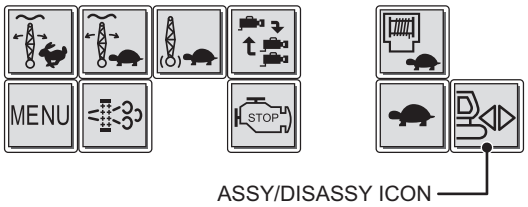

Note

Press (assy/disassy icon), (boom, jib lowering icon) for more than 1 second.

Note

When the boom angle is being high or the load is detecting by the load cell, the assy/disassy mode cannot be set.
When the boom is raised after the assembly, assy/disassy mode will be released.

TOOL

- Attached tool set
- Assist crane (25 t capacity)
- Wire rope slings (Synthetic fiber sling)
- Wood block
- Corner protectors
- Steel bar
  20 mm dia. (25/32″ dia.) × 300 mm (11-13/16″)

Reference Only

5.3.1 TREATMENT OF OVERHOIST LIMIT SWITCH WIRING

1. Disconnecting the jib wiring

   If the jib is installed, disconnect the wiring at jib tip and wind up to the cable reel.
   Put the waterproof caps to the disconnected connectors.

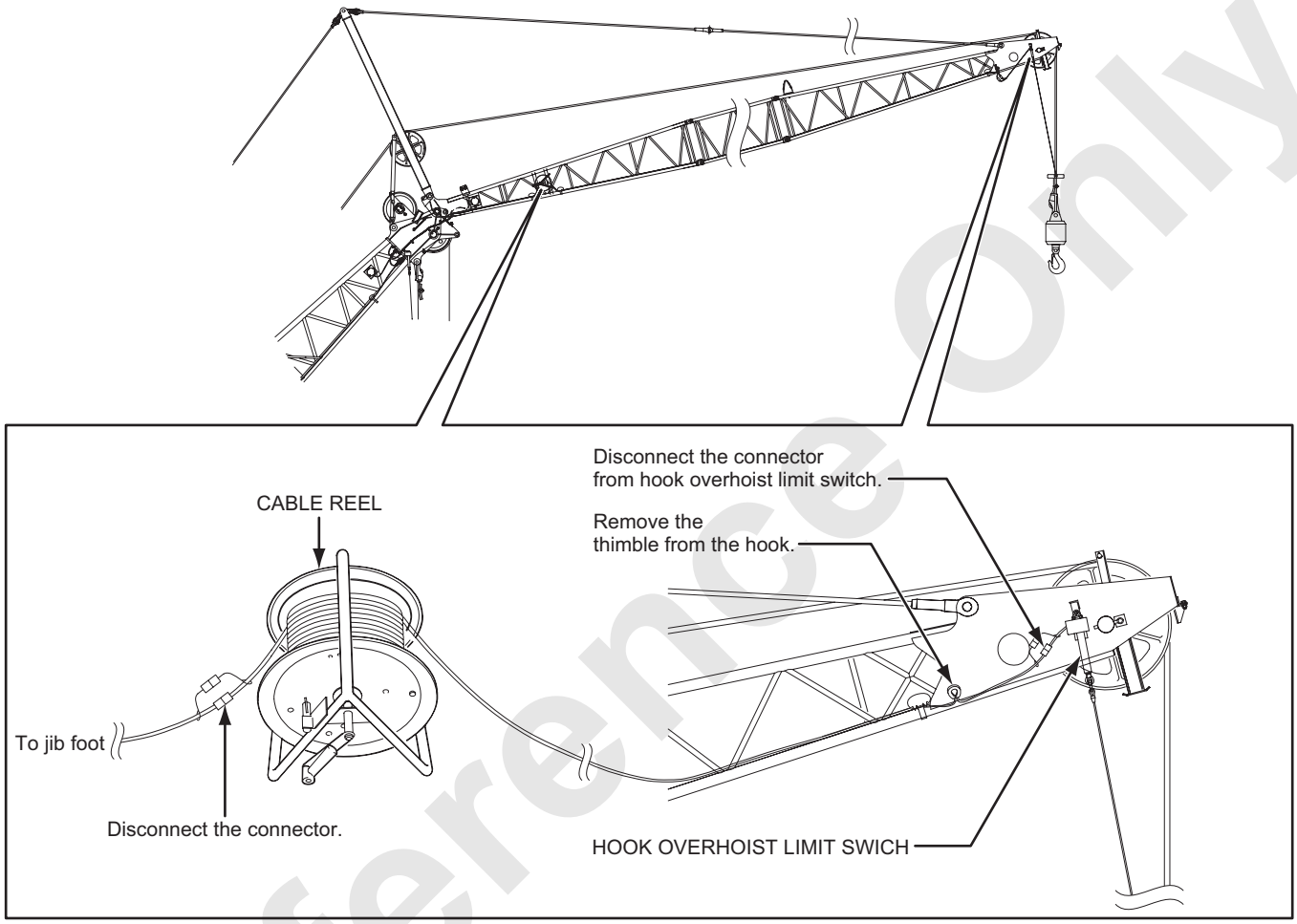

WARNING

- **When working at a high elevation, be sure to use a safety belt to prevent falling.**
  Failure to observe this precaution may result in a serious injury or loss of life.
- **Use a scaffolding board for working on the attachment.**
  Failure to observe this precaution may result in a serious injury or loss of life.

Reference Only

2. Disconnecting the load safety device wiring on the boom tip

   Disconnect the hook overhoist limit switch wiring at the boom tip.
   Also disconnect the wiring for the auxiliary sheave if used.
   Put the waterproof caps on the disconnected connectors.

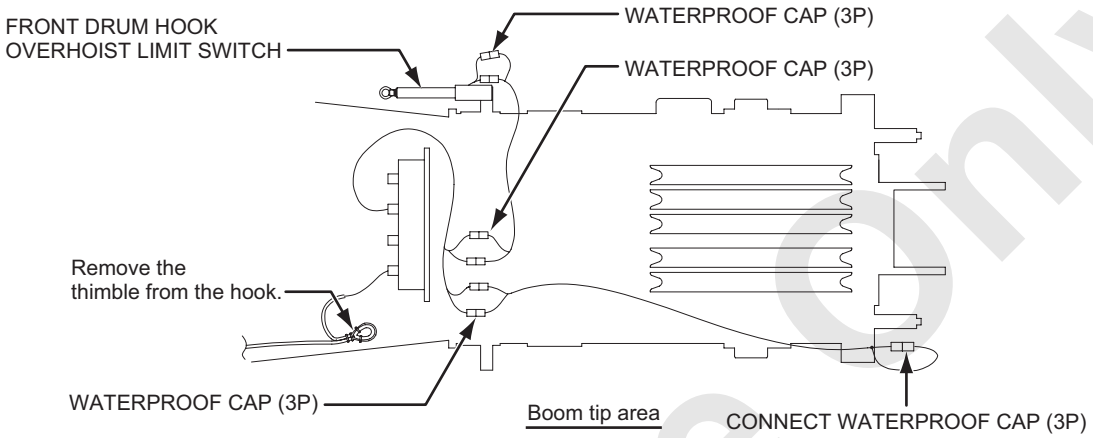

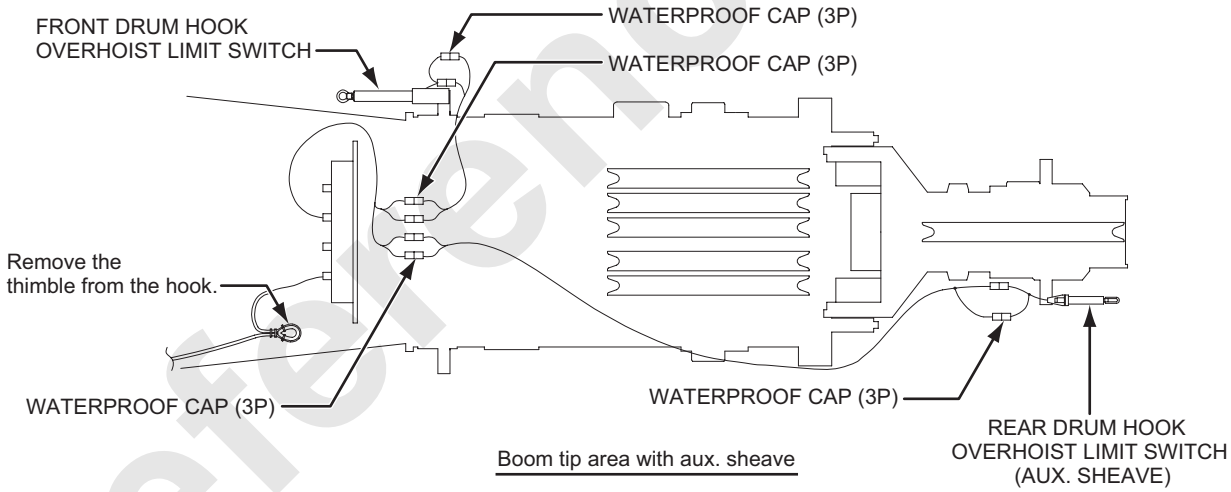

WARNING

- **When working at a high elevation, be sure to use a safety belt to prevent falling.**
  Failure to observe this precaution may result in a serious injury or loss of life.
- **Use a scaffolding board for working on the attachment.**
  Failure to observe this precaution may result in a serious injury or loss of life.

Reference Only

5.3.2 WINDING UP THE FRONT/REAR DRUM WIRE ROPES

CAUTION

Confirm that the hook is placed in the stable condition.

1. Remove the rope socket and clamp from the wire rope end.

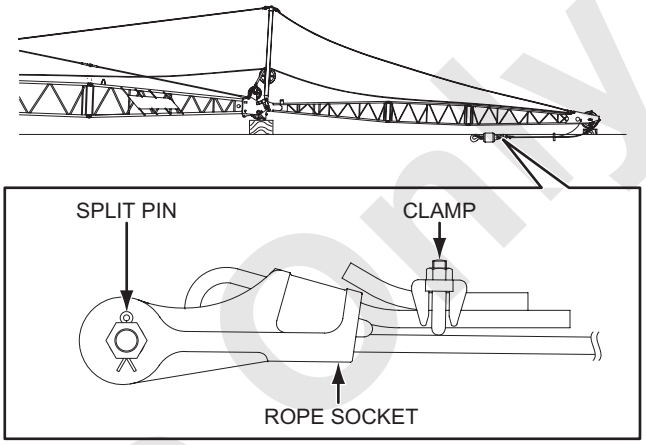

2. Remove the hook overhoist limit switch and weight from the jib point area.

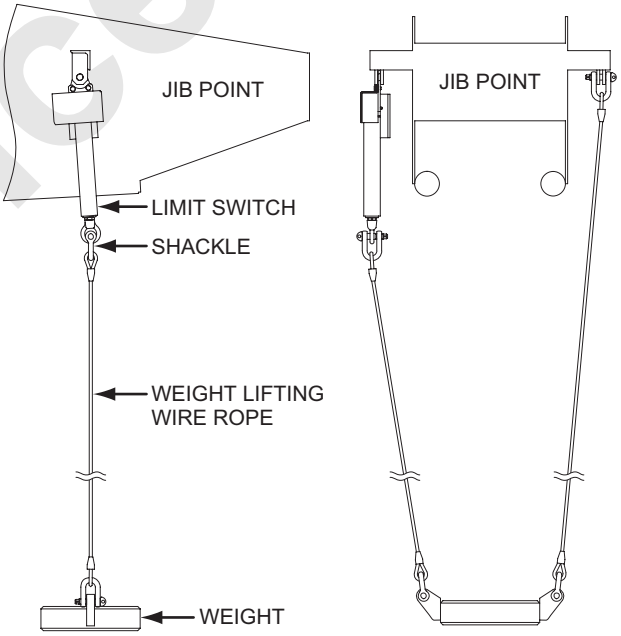

Reference Only

3. Slowly operate the front or rear drum control lever to wild up the hoist wire rope onto the corresponding drum and be careful not to tangle the hoist wore rope with sheave (s).

WARNING

- **When handling the wire rope, use leather gloves to prevent injury on the fingers or hands.**
  Failure to observe this precaution may result in a serious injury.
- **Take extra care to work on the moving wire rope not to touch the sheave and wire rope to prevent accident of being crushed or being entangled.**
  Failure to observe this precaution may result in a serious injury or loss of life.
- **Keep away from rope end when removing the wire rope if may suddenly jump and cause injury.**
  Failure to observe this precaution may result in a serious injury or loss of life.

4. Fix the wire rope end to the drum outer layer with a steel wire after winding up.

Reference Only

5.3.3 DISASSEMBLING THE JIB

1. After lowering the jib on the ground, hold the strut with an assist crane.
   Disconnect the boom side jib guy lines from the lugs on the boom insert.

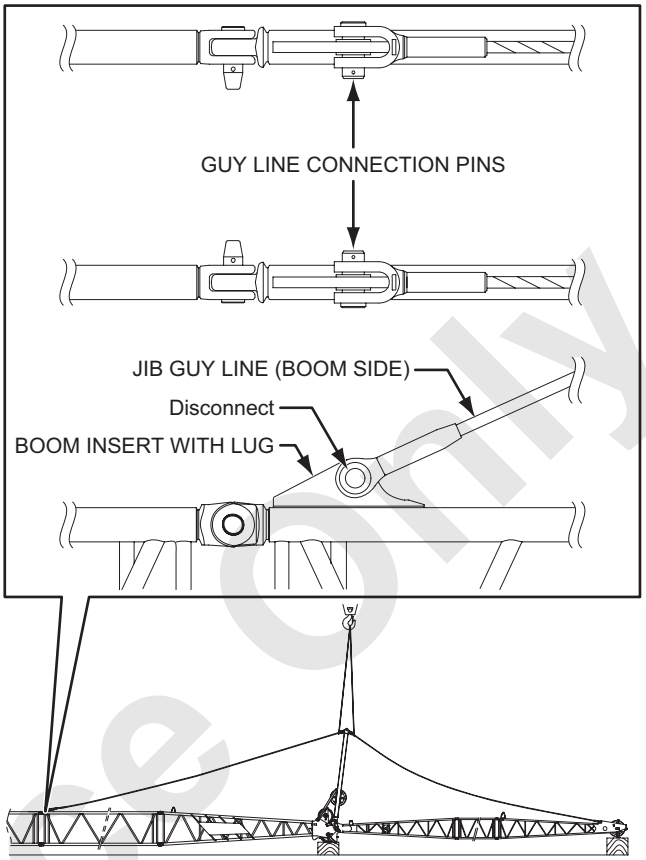

2. Remove the strut backstop from the strut, and lay it down toward the jib side while holding the strut.

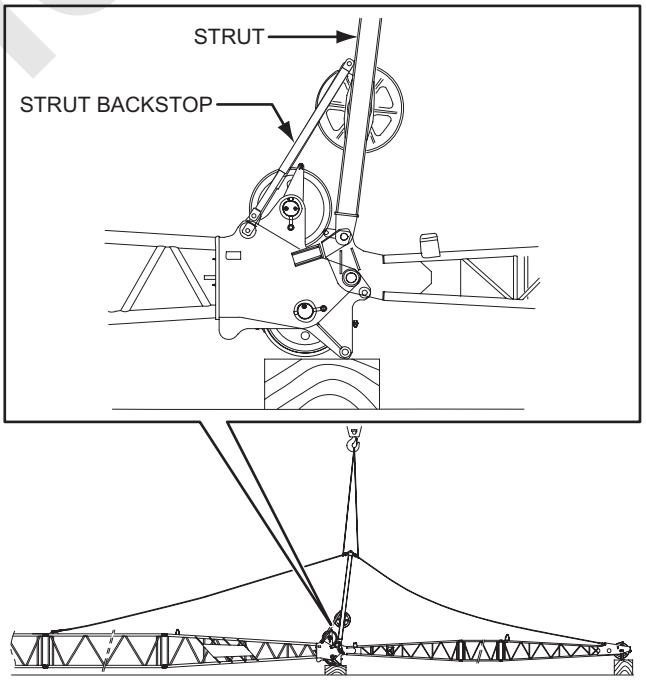

Reference Only

3. Take off the jib guy line from the jib tip.

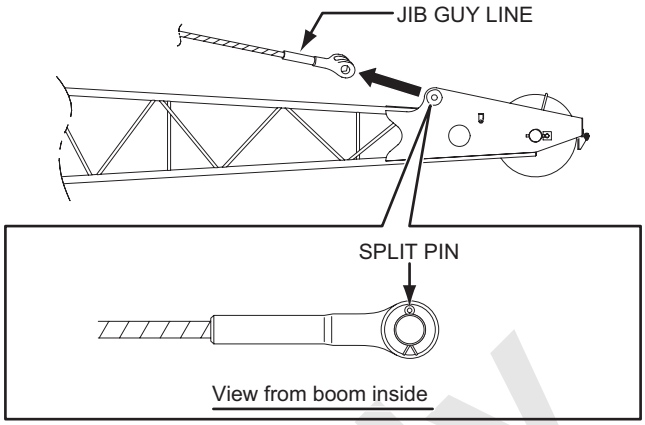

4. Remove the strut equalizer sheaves to take off the jib guy lines.
   Reinstall the removed equalizer sheaves back to the original positions.

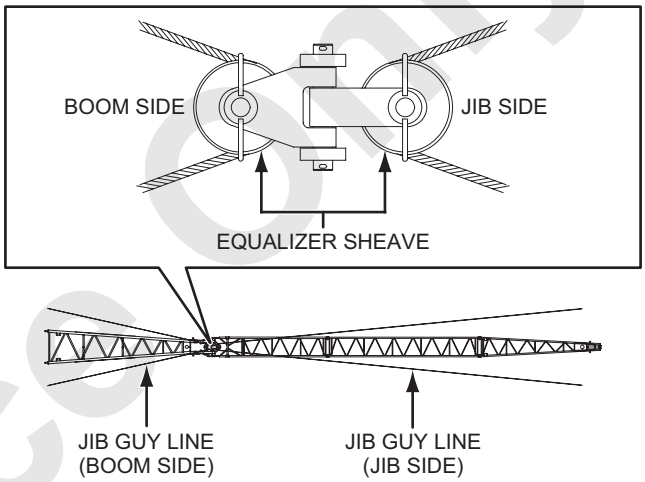

5. With the jib being held with an assist crane, detach the jib from the boom.
   Place the jib on wood blockings.

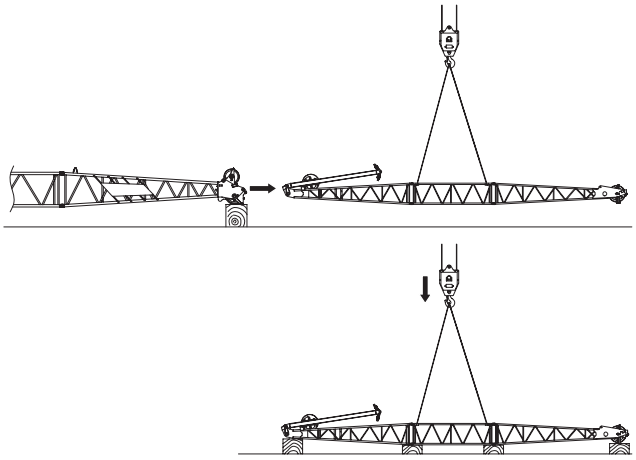

Reference Only

6. First remove the jib tip then jib base, followed by jib insert (s) by disconnecting the pins.
   While supporting the component with an assist crane, remove the top pins first and then remove the bottom pins.
   When disconnecting the jib connection points, support the jib with the wood blockings to provide stability.

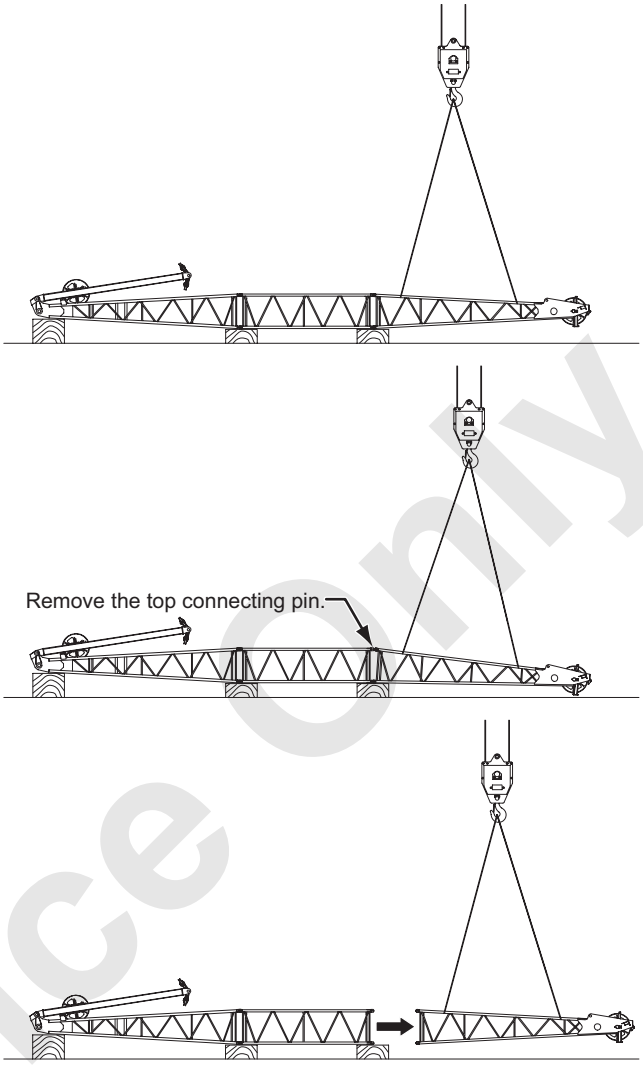

Reference Only

5.3.4 REMOVING THE AUXILIARY SHEAVE

When the auxiliary sheave is equipped, remove the auxiliary sheave with the following procedure.

Auxiliary sheave weight : 195 kg (430 lbs)

1. Remove the bolt, nut and split pin first and then remove the rope socket from the ball hook.

2. Remove the overhoist limit switch and weight from the auxiliary sheave.

3. Wind up the rear drum rope slowly.

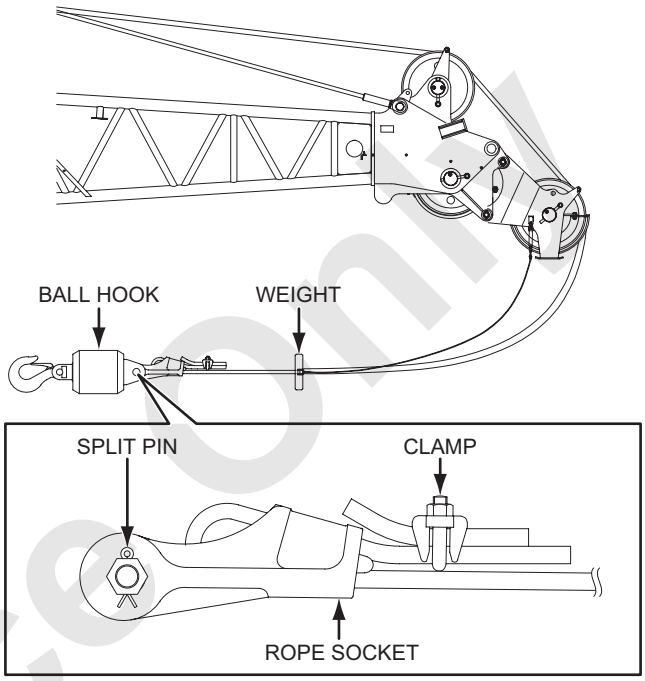

4. Remove the upper then lower securing pins on the boom tip while holding the auxiliary sheave with an assist crane.

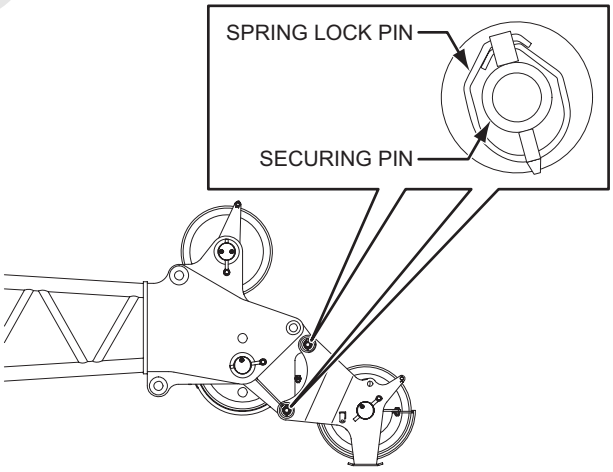

WARNING

Do not insert finger or hand into a pin hole when aligning, inserting or removing pin.
Failure to observe this precaution may result in a serious injury or loss of life.

5. Remove the auxiliary sheave assembly from the boom tip.

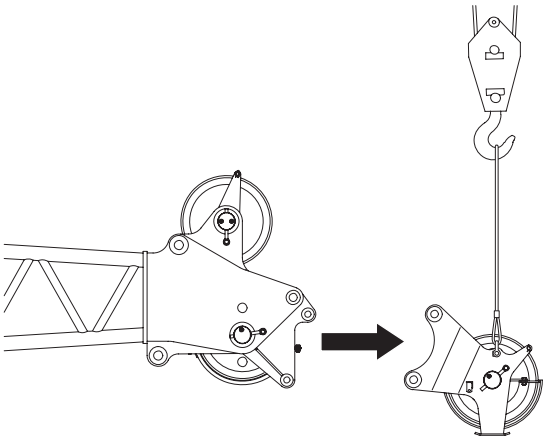

Reference Only

5.3.5 DISASSEMBLING THE BOOM

1. Removing the boom guy line

(1) Set the both spreader guides to the work position, and slowly loosen the boom hoist wire rope.
(2) Use the spreader guide, to install the upper spreader on the boom base with the spreader securing pin.
(Refer to 5.1.3 HANDLING OF SPREADER GUIDE).

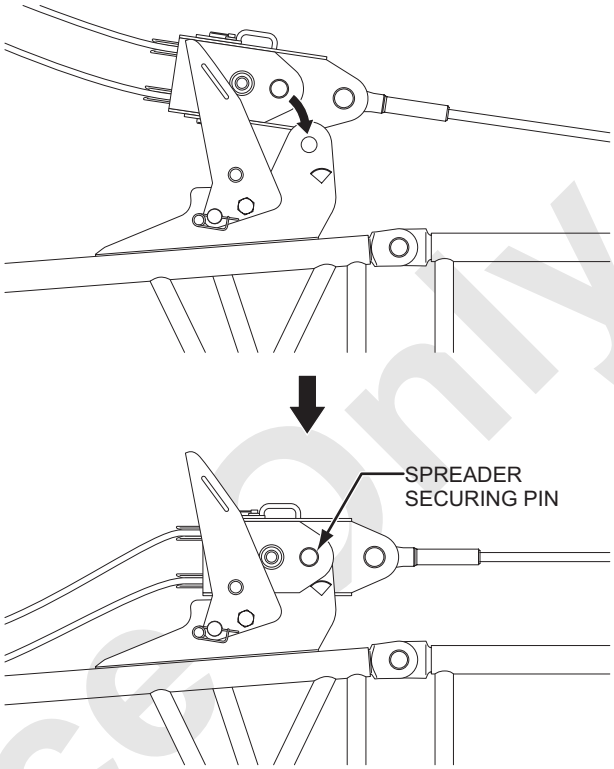

WARNING

Place a signalman to prevent an incident from caught.
Failure to observe this precaution may result in a serious injury or loss of life.

CAUTION

When assembling/disassembling the attachment, do not place the attachment direct to the ground.
Place a wooden block and place the attachment stably on it.

(3) Disconnect the guy lines from the upper spreader.
Put back the guy line connecting pins to the upper spreader.

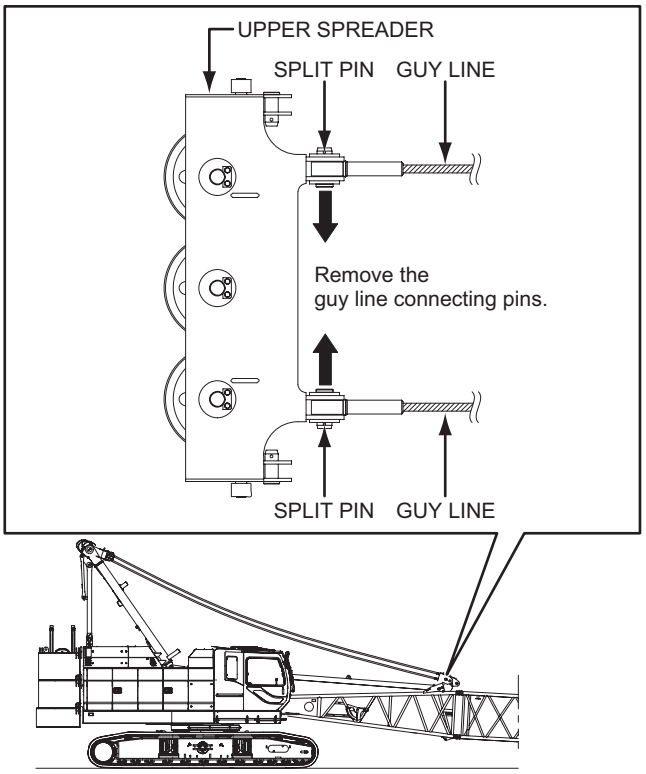

Reference Only

(4) Disconnect guy lines step by step in order.
(5) Using an assist crane, lower the guy lines to the ground.
Be careful not to damage the boom.

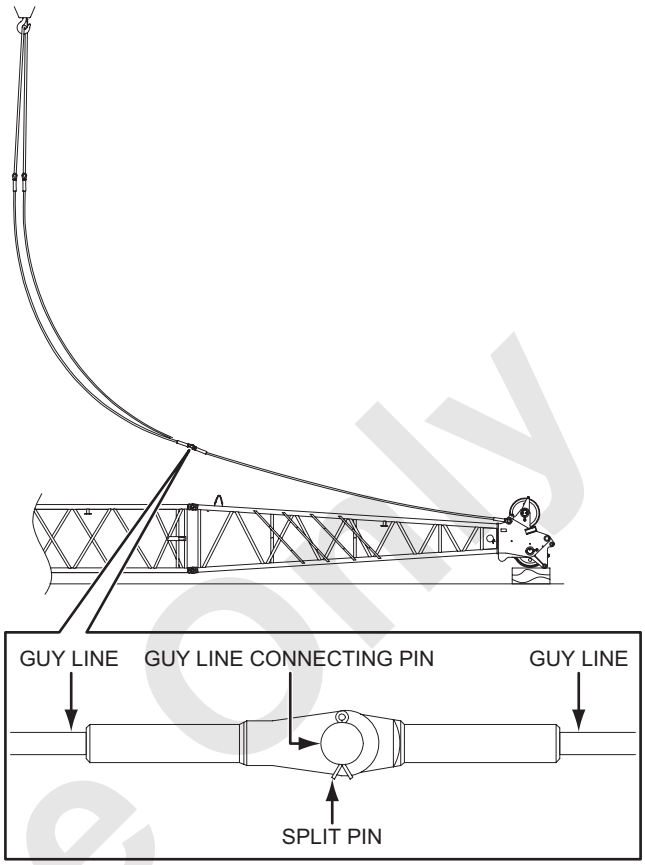

2. Removing the cable roller

Remove the cable roller which is installed on the boom insert.
Remove the cable roller installed on the boom tip if required.

For boom insert	For boom tip
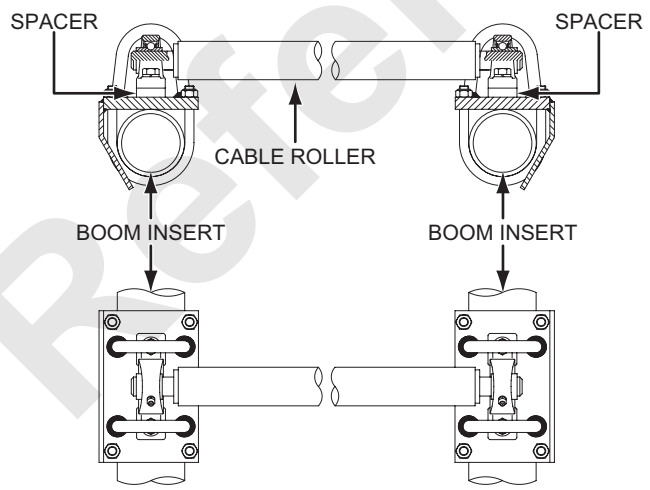	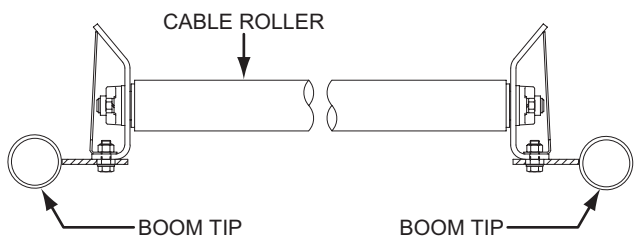

Reference Only

3. Disconnecting the boom base and boom insert

(1) Lift up the connecting point of the boom base and the boom insert to relief the force on the lower connecting point.
(2) Draw out the lower connecting pin (double tapered) from outside.
(3) Insert a steel bar in to the hole after removing the connecting pin (double tapered) to avoiding out of alignment.
(4) Remove other side of connecting pin (double tapered) in the same way.

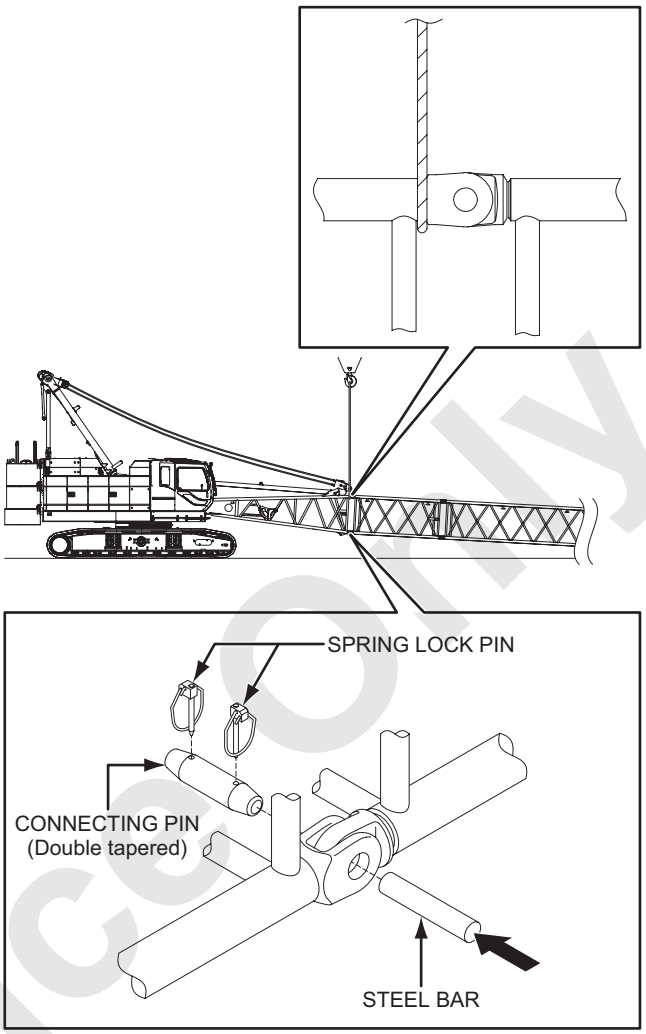

DANGER

Do not stand on, or enter under/inside of the attachment being assembling/disassembling.
Failure to observe this precautions may result in a serious injury or loss of life.

WARNING

Do not insert finger or hand into a pin hole when aligning, inserting or removing pin.
Failure to observe this precaution may result in a serious injury or loss of life.

WARNING

Do not stand in line with the connecting pins (double tapered) being inserted/removed.
The pin may fly out from the pinhole.
Failure to observe this precaution may result in a serious injury or loss of life.

Reference Only

(5) Remove the bar and slowly lower the boom base which is supported by an assist crane and place it on the wood blockings.

(6) After confirming that the boom base is stable on the wood blockings, remove the upper connecting pins (with flange) and disconnect it from the boom insert.

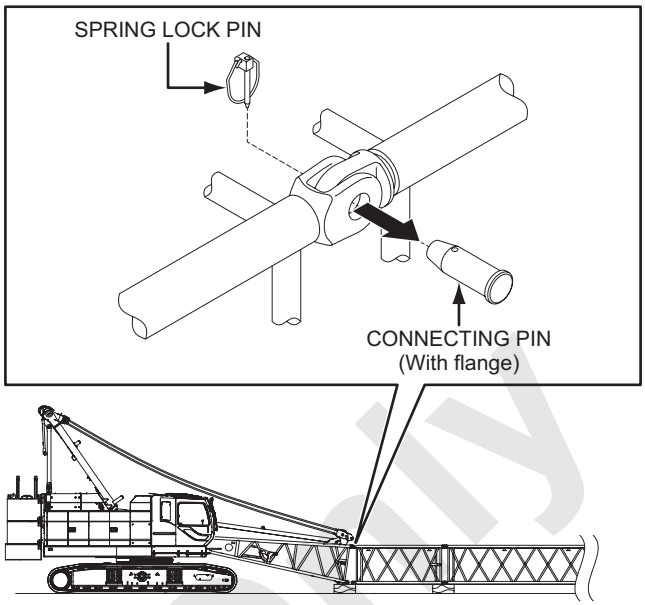

WARNING

Do not insert finger or hand into a pin hole when aligning, inserting or removing pin.
Failure to observe this precaution may result in a serious injury or loss of life.

4. Disconnecting the boom tip

While holding the boom tip with an assist crane, draw out the bottom side connecting pins.
Then, draw out the top side connecting pins, to disconnect the boom tip.
Remove the boom tip with using the assist crane.

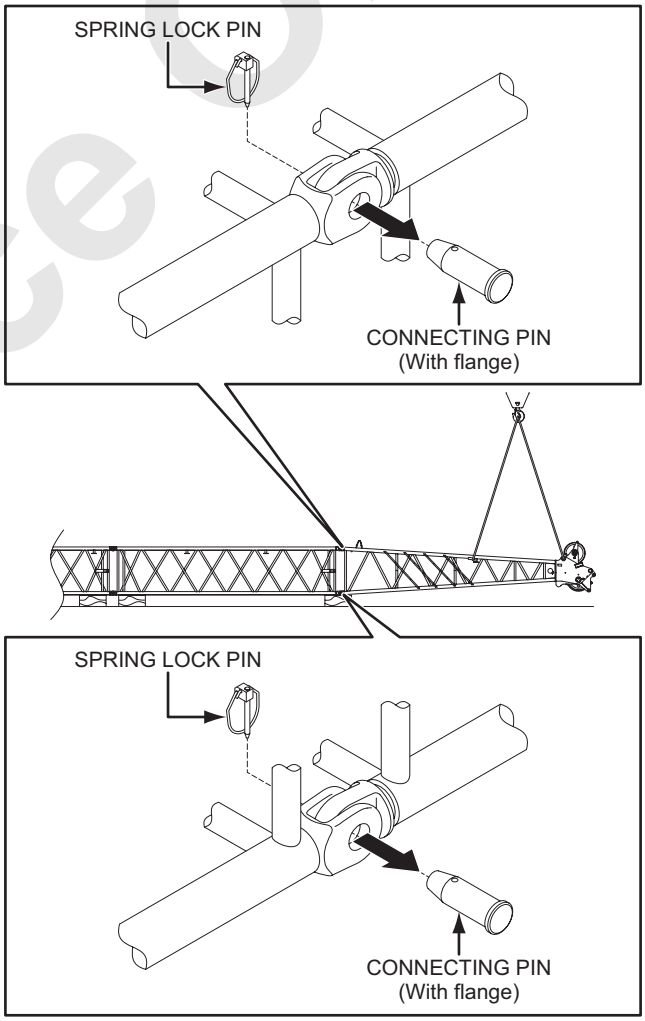

WARNING

Do not insert finger or hand into a pin hole when aligning, inserting or removing pin.
Failure to observe this precaution may result in a serious injury or loss of life.

Reference Only

5. Disassembling the boom insert

   Disconnect the boom insert from boom tip side in order by removing the top and bottom connecting pins (with flange).

WARNING

Do not insert finger or hand into a pin hole when aligning, inserting or removing pin.
Failure to observe this precaution may result in a serious injury or loss of life.

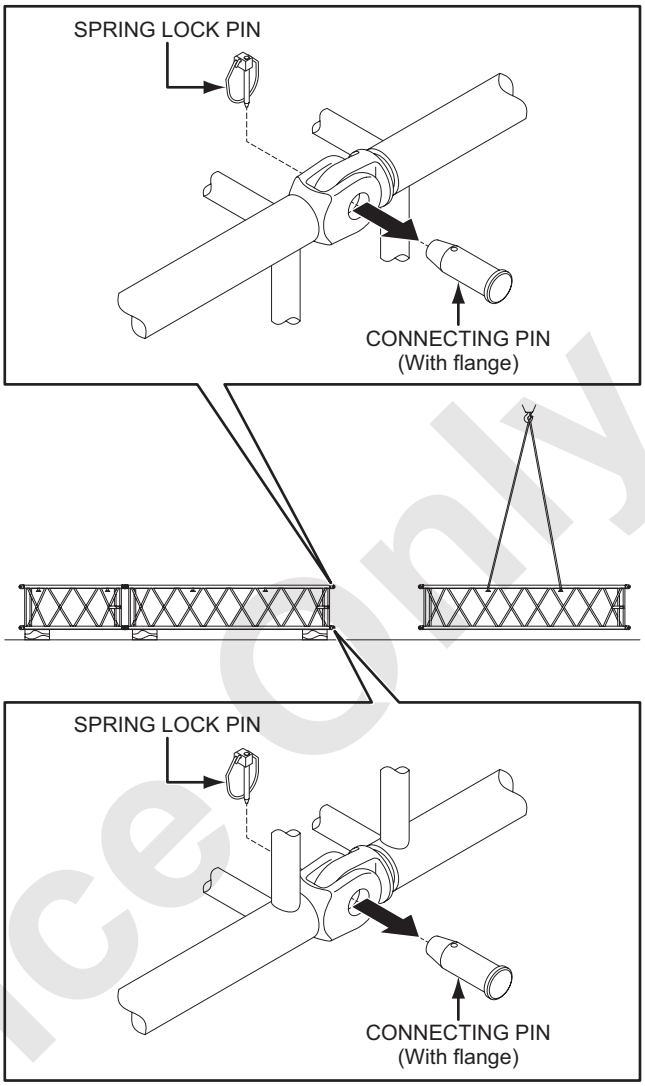

Reference Only

5.4 CAUTION WHEN TRANSPORTING BOOM

1. In order to prevent damaging the boom, do not apply the slings directly to the main chords.
   Do not apply slings to the lacings.
   Use only synthetic fiber slings.

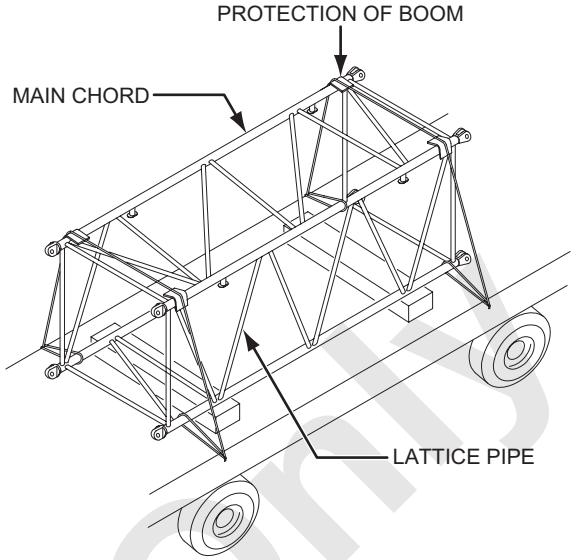

CAUTION

Do not apply slings to lattice pipes for transport. The lattice pipes may be damaged.

2. Place wood blockings under the both ends of the boom.

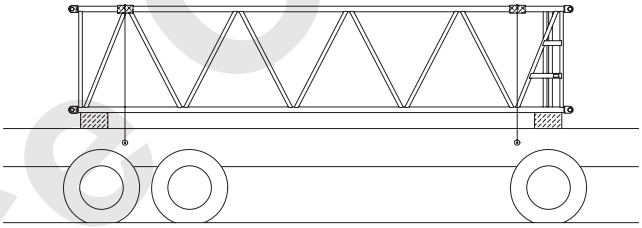

3. When placing a boom on top of another boom, place wood blockings in similar manner to the bottom one.
   If one of them has lugs, place it at the bottom to keep the transport height low.

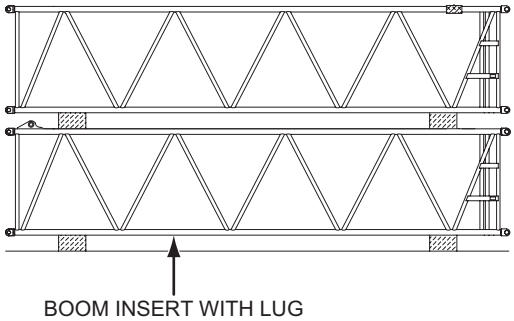

Reference Only

Reference Only

6. WIRE ROPE

6.1 HANDLING OF WIRE ROPE 6-1
6.1.1 SPECIFICATION OF WIRE ROPE 6-2
6.1.2 WIRE ROPE LENGTH 6-5
6.1.3 CAUTIONS IN HANDLING WIRE ROPE 6-7
6.1.4 WINDING WIRE ROPE TO THE DRUM 6-8
6.1.5 CORRECTING METHOD OF ENTANGLED WIRE ROPE 6-12
6.1.6 ROPE SOCKET INSTALLATION 6-14
6.1.7 REPLACEMENT STANDARDS FOR WIRE ROPE 6-15

Reference Only

Reference Only

6. WIRE ROPE

6.1 HANDLING OF WIRE ROPE

CAUTION

When the crane is shipped from factory, maximum length of wire rope required for boom and jib configuration and a number of part lines which is possible has been wound on the drum.
If boom length is short and a number of parts lines are less, rough spooling such as looseness of wire rope, cross winding or biting may occur.
Use of proper rope length based on crane operating conditions (length of boom or jib, number of part lines of rope, lifting height) is recommended.
(Refer to the table in "6.1.2 WIRE ROPE LENGTH".)
The hook has been removed at the factory shipment. Winding of rope may be loose and rope biting may occur.
If wire rope is loose, rewind the wire rope applying some tension.

CAUTION

If rope diameter is out of specified range, biting or rough spooling may occur.
Recommend use genuine wire rope.

CAUTION

Set the hook and number of parts line of rope properly based on lifting load and length of boom and jib.
Failure to observe this precaution may result in a serious accident.

WARNING

Operate the control lever slowly.
Abrupt control lever operation is very dangerous, and may create the rough spooling of wire rope on the drum or load swinging.

Reference Only

6.1.1 SPECIFICATION OF WIRE ROPE

WIRE ROPE FOR CRANE

Use	Rope spec.	Breaking strength : kN (lbs)	Rope dia. : mm	Rope length : m (ft)	Part No.
Front drum	U3 × SeS (48) Right-hand Regular lay	601 (135,110)	26	235 (771)	
	IWRC 6 × Fi (29) Right-hand Regular lay	534 (120,048)			
Rear drum	U3 × SeS (48) Right-hand Regular lay	601 (135,110)	26	160 (525)	
	IWRC 6 × Fi (29) Right-hand Regular lay	534 (120,048)			
Boom hoist drum	IWRC 6 × P·WS (31) Right-hand Regular lay	210 (47,210)	16	150 (492)	
Third drum (Option)	IWRC 6 × Fi (29) Right-hand Regular lay	363 (81,606)	22	145 (476)	

⚠ CAUTION

- **To properly wind the wire rope to the drum, it is recommended to use wire rope with its diameter of 3.5 ± 1% larger than nominal value.**
- **If rope diameter is out of specified range, biting or rough spooling may occur. Recommend use genuine wire rope.**

WIRE ROPE FOR HYDRAULIC TAGLINE (OPTION)

Use	Rope spec.	Breaking strength : kN (lbs)	Rope dia. : mm	Rope length : m (ft)	Part No.
Hydraulic tagline	FC 6 × W (19) Right-hand Regular lay	58 (13,039)	10	45 (148)	

- Ensure to use the specified type of wire rope on each drum as factory shipment by Manitowoc.
- If the diameter of the rope used is out of dimension tolerance range on each drum groove, rope upsetting may be caused.

Reference Only

WINDING CAPACITY OF WIRE ROPE ON EACH DRUM

Front drum, Rear drum

Drum winding capacity on min. Pcd with 26 mm dia. rope.

Layer	Row	Min Pcd : m (ft)	Winding L on each layer : m (ft)	Total winding length : m (ft)
1	22	0.614 (2.014)	42.4 (139)	42.4 (139)
2	22	0.658 (2.159)	45.5 (149)	87.9 (288)
3	22	0.702 (2.303)	48.6 (159)	136.5 (448)
4	22	0.747 (2.451)	51.6 (169)	188.1 (617)
5	22	0.791 (2.595)	54.6 (179)	242.7 (796)
6	22	0.835 (2.740)	57.7 (189)	300.4 (986)
7	22	0.879 (2.884)	60.8 (199)	361.2 (1,185)

Min Pcd means theoretical value calculated from the figure below on 2nd or higher layer.

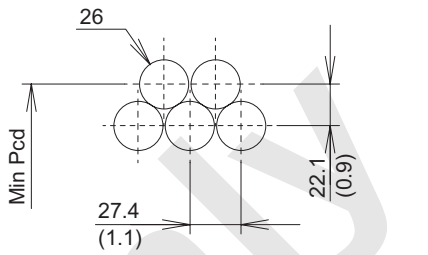

Unit : mm (in.)

Third drum (option)

Drum winding capacity on min. Pcd with 22 mm dia. rope.

Layer	Row	Min Pcd : m (ft)	Winding L on each layer : m (ft)	Total winding length : m (ft)
1	23	0.550 (1.805)	39.7 (130)	39.7 (130)
2	23	0.587 (1.926)	42.5 (139)	82.2 (270)
3	23	0.624 (2.047)	45.1 (148)	127.3 (418)
4	23	0.662 (2.172)	47.9 (157)	175.2 (575)
5	23	0.700 (2.297)	50.5 (166)	225.7 (740)
6	23	0.737 (2.418)	53.3 (175)	279.0 (915)
7	23	0.774 (2.539)	55.9 (183)	334.9 (1,098)

Min Pcd means theoretical value calculated from the figure below on 2nd or higher layer.

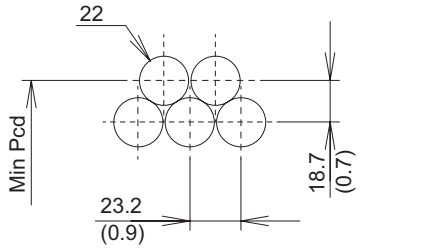

Unit : mm (in.)

Boom drum

Drum winding capacity on min. Pcd with 16 mm dia. rope.

Layer	Row	Min Pcd : m (ft)	Winding L on each layer : m (ft)	Total winding length : m (ft)
1	12	0.376 (1.234)	14.2 (47)	14.2 (47)
2	12	0.403 (1.322)	15.2 (50)	29.4 (96)
3	12	0.430 (1.411)	16.2 (53)	45.6 (150)
4	12	0.458 (1.503)	17.3 (57)	62.9 (206)
5	12	0.485 (1.591)	18.2 (60)	81.1 (266)
6	12	0.512 (1.680)	19.3 (63)	100.4 (329)
7	12	0.539 (1.768)	20.3 (67)	120.7 (396)
8	12	0.566 (1.857)	21.4 (70)	142.1 (466)
9	12	0.594 (1.949)	22.4 (73)	164.5 (540)
10	12	0.621 (2.037)	23.4 (77)	187.9 (616)

Min Pcd means theoretical value calculated from the figure below on 2nd or higher layer.

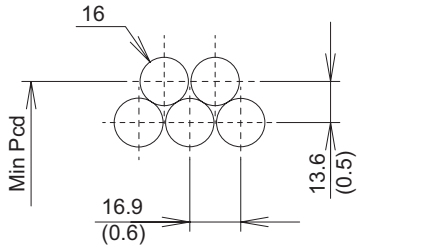

Unit : mm (in.)

Reference Only

TYPE OF WIRE ROPE

The factory shipped wire ropes do not satisfy all working condition.
Selection of proper wire rope to the working condition is required.
The wire rope has its own characteristics.
Select the proper wire rope to the working condition referring to the table below.

PRINCIPAL WORK CONTENTS AND ITS RECOMMENDED HOIST WIRE ROPE TYPE

Work contents	Type of wire rope	Remarks
High lifting work • Crane, Tower • Jib, Aux. sheave • Rope number of parts line 1 to 2	U3 × SeS (48)	Even non rotating type, it has rotating property.
General crane work • Work with boom shorter than half of maximum boom. Work cycle is comparatively low. • Assisting crane work to foundation work • Clamshell work	IWRC 6 × Fi (29)	
Heavy load, High cycle work • Block lifting / transposition work • Port loading / unloading work (Grab bucket work)	IWRC 6 × Fi (29)	
Heavy load, High cycle work • Under ground excavating work (Hammer grab work)	IWRC 6 × Fi (29) U3 × SeS (48)*	* Even non rotating type, it has rotating property.
Heavy load, High cycle work • Underground diaphragm wall work (Diaphragm wall bucket work)	IWRC 6 × Fi (29) U3 × SeS (48)*	* Even non rotating type, it has rotating property.
Light load, High cycle work • Lifting magnet work	IWRC 6 × Fi (29)	

TYPE OF WIRE ROPE FOR BOOM AND JIB HOIST

Work contents	Type of wire rope	Remarks
All construction and foundation work • Crane boom hoist • Tower hoist • Tower jib hoist	IWRC 6 × P·WS (31)	

Reference Only

6.1.2 WIRE ROPE LENGTH

WIRE ROPE LENGTH OF FRONT DRUM FOR CRANE

Unit : m (ft.)

Boom length : m (ft.)	Parts of line						
	1 part	2 part	4 part	5 part	6 part	7 part	8 part
12.2 (40)	28 (92)	40 (131)	65 (213)	78 (256)	90 (295)	103 (338)	115 (377)
15.2 (50)	34 (112)	49 (161)	80 (262)	96 (315)	111 (364)	127 (417)	142 (466)
18.3 (60)	40 (131)	58 (190)	95 (312)	114 (374)	132 (433)	151 (495)	169 (554)
21.3 (70)	46 (151)	67 (220)	110 (361)	132 (433)	153 (502)		
24.4 (80)	52 (171)	76 (249)	125 (410)	150 (492)	174 (571)		
27.4 (90)	58 (190)	85 (279)	140 (459)	168 (551)			
30.5 (100)	64 (210)	95 (312)	156 (512)	186 (610)			
33.5 (110)	70 (230)	104 (341)	171 (561)				
36.6 (120)	76 (249)	113 (371)	186 (610)				
39.6 (130)	82 (269)	122 (400)	201 (659)				
42.7 (140)	88 (289)	131 (430)	216 (709)				
45.7 (150)	94 (308)	140 (459)	231 (759)				
48.8 (160)	100 (328)	149 (489)					
51.8 (170)	106 (348)	158 (518)					
54.9 (180)	112 (367)	167 (548)					
57.9 (190)	118 (387)	176 (577)					
61.0 (200)	124 (407)	185 (607)					

⚠ CAUTION

If the longer rope is used, rope rough spooling on the drum may likely occur.

Note

This table indicates the required rope length in case the hook height is about boom foot.
If in case the below ground work is required, the wire length shall be determined accordingly.

Reference Only

WIRE ROPE LENGTH OF REAR DRUM FOR FIXED JIB Unit : m (ft.)

Boom length : m (ft.)	Jib length : m (ft.)			
	9.1 (30)	12.2 (40)	15.2 (50)	18.3 (60)
24.4 (80)	72 (236)	78 (256)	83 (272)	89 (292)
27.4 (90)	78 (256)	84 (276)	90 (295)	95 (312)
30.5 (100)	84 (276)	90 (295)	96 (315)	101 (331)
33.5 (110)	90 (295)	96 (315)	102 (335)	108 (354)
36.6 (120)	96 (315)	102 (335)	108 (354)	114 (374)
39.6 (130)	102 (335)	108 (354)	114 (374)	120 (394)
42.7 (140)	108 (354)	114 (374)	120 (394)	126 (413)
45.7 (150)	114 (374)	120 (394)	126 (413)	132 (433)
48.8 (160)	120 (394)	126 (413)	132 (433)	138 (453)
51.8 (170)	126 (413)	132 (433)	138 (453)	144 (472)
54.9 (180)	132 (433)	138 (453)	144 (472)	150 (492)
57.9 (190)	138 (453)	144 (472)	150 (492)	156 (512)

⚠ CAUTION

If the longer rope is used, rope rough spooling on the drum may likely occur.

Note

This table indicates the required rope length in case the hook height is about boom foot.
If in case the below ground work is required, the wire length shall be determined accordingly.

Reference Only

6.1.3 CAUTIONS IN HANDLING WIRE ROPE

1. Cautions in unloading or during transportation

- Do not drop from the load deck.
- When rolling the wooden rope reel with lever etc, do not touch the wire rope direct with the lever but touch the outer flange area.
- In case of coiled wire rope, do not place or roll over directly on the sandy ground or on the steel pieces.

2. Cautions in storing

- Store the wire rope in dry atmosphere.
  In case of outdoor storage, ensure to put the cover to protect from rain.
- Do not place the wire rope directly on the ground but place them approx. 200 to 300 mm (8″ to 12″) above the ground with wooden blocks.

3. Unreeving the wire rope

   When unreeving the wire rope, take extra care not to allow kinking.
   It would be convenient to use the jig as shown right.
   If such jig is not available, unreeve the wire rope by rolling the reel on the ground taking care not to allow sand or iron pieces adhered.

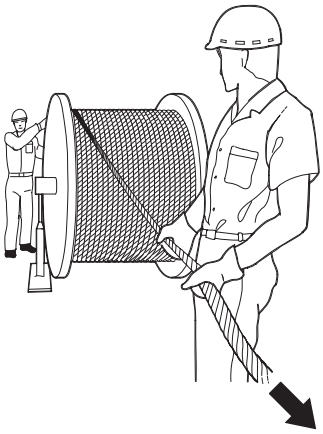

Kink : Deformation by twisting of wire rope

(1)		Loop by twisting wire rope
(2)		Pulled up condition under tension
(3)		Kink occurred
(4)		Wire rope does not return to original shape

Unreeving method of wire rope

Reference Only

6.1.4 WINDING WIRE ROPE TO THE DRUM

1. In case of front and rear drum

⚠ CAUTION

When the crane is shipped from factory, maximum length of wire rope required for boom and jib configuration and a number of part lines which is possible has been wound on the drum.
If boom length is short and a number of parts lines are less, rough spooling such as looseness of wire rope, cross winding or biting may occur.
Use of proper rope length based on crane operating conditions (length of boom or jib, number of part lines of rope, lifting height) is recommended.
(Refer to the table in "6.1.2 WIRE ROPE LENGTH".)
The hook has been removed at the factory shipment. Winding of rope may be loose and rope biting may occur.
If wire rope is loose, rewind the wire rope applying some tension.

Reference Only

(1) Pass the wire rope through the inside of the drum flange and secure it to the drum flange by clamping with two mounting plates.
Do not allow the rope end to protrude from the drum flange.

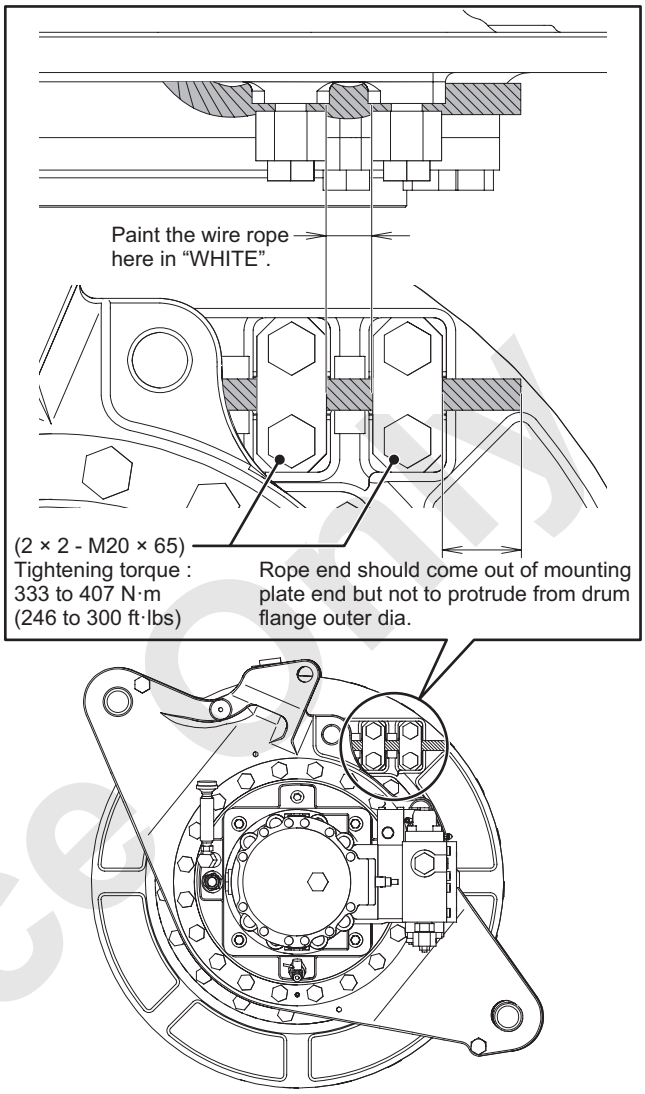

WARNING

If the rope end is not firmly secured, rope may slip out and the load may drop off.
Ensure to secure the rope end properly.
Failure to observe this precaution may result in a serious accident.

(2) Pull the wire rope manually and wind up on the drum groove while guiding the rope along the drum end guide.
Make sure that minimum 3 turns remain on the drum even wire rope is paid out to the maximum.

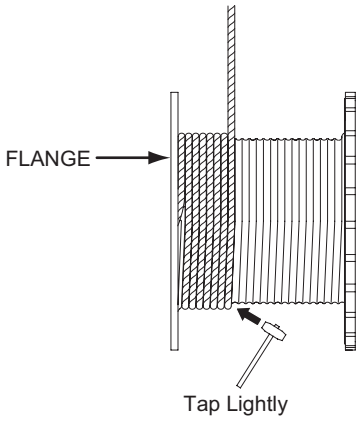

WARNING

If more than 3 turns do not remain on the drum, wire rope may slip out and lifting load may drop.
Ensure to have minimum 3 turns remained on the drum.
Failure to observe this precaution may result in a serious accident.

Reference Only

(3) Winding the wire rope to the drum with applying the tension approximate 2 to 4% of its breaking strength.
To apply the tension on the wire rope, lift the required load with the necessary lifting height, pull the load which is placed on the ground in front or traveling to the load with applying the tension by winding the hoist drum.

2. In case of boom drum

(1) Do not allow the wire rope end to come out of drum wedge hole.
Tension side rope should come to the straight face side of socket.
Install the wedge firmly on the drum.

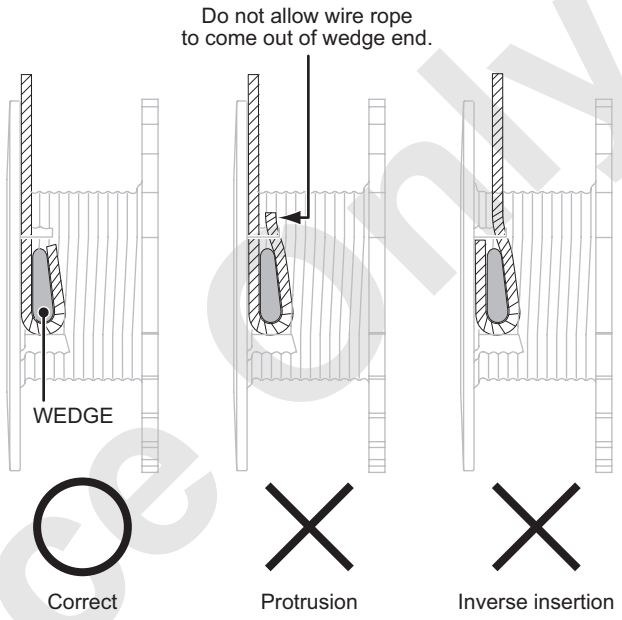

(2) Pull the boom hoist wire rope manually and tap lightly on the wire rope to align and wind the wire rope slowly.
Apply tension on the wire rope by boom weight and slowly wind on the drum.

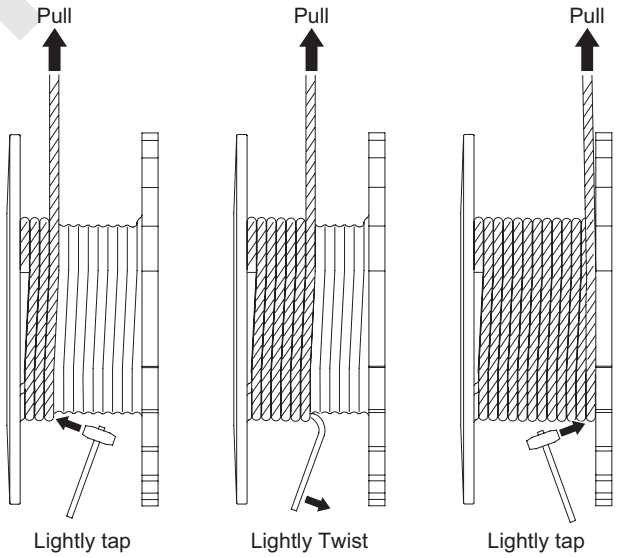

⚠ WARNING

Take extra care to work on the moving wire rope not to touch the sheave and wire rope to prevent accident of being crushed or being entangled.
Failure to observe this precaution may result in a serious injury or loss of life.

Reference Only

(3) Make sure that minimum 3 turns remain on the drum even wire rope is paid out to the maximum.

⚠ WARNING

If more than 3 turns do not remain on the drum, wire rope may slip out and lifting load may drop off. Ensure to have minimum 3 turns remained on the drum.
Failure to observe this precaution may result in a serious accident.

(4) Winding the wire rope to the drum with applying the tension approximate 2 to 4% of its breaking strength.
To apply the tension on the wire rope, lift up the whole of boom hoist wire rope between the upper and lower spreader with an assist crane or the apply the boom weight to the upper and lower spreader.

3. If the layer change occurs on the drum flange protruding point (change from 1st layer to 2nd layer), wire rope and drum end area is guided by protruding portion and clearance of approx. 1/2 of wire rope dia. may be created.

⚠ CAUTION

If wire rope wound without clearance having forced to along with the protruding part may cause rope upsetting.
Ensure to provide clearance as shown on right figure at the protruding part.
Failure to observe this precaution may lead to damage parts.

Even if the winding layer becomes multiple layer, wire rope behavior in layer changing area is basically the same as that of between 1st and 2nd layer.
However due to wire rope and drum manufacturing unevenness, layer change area varies as layer becomes larger.

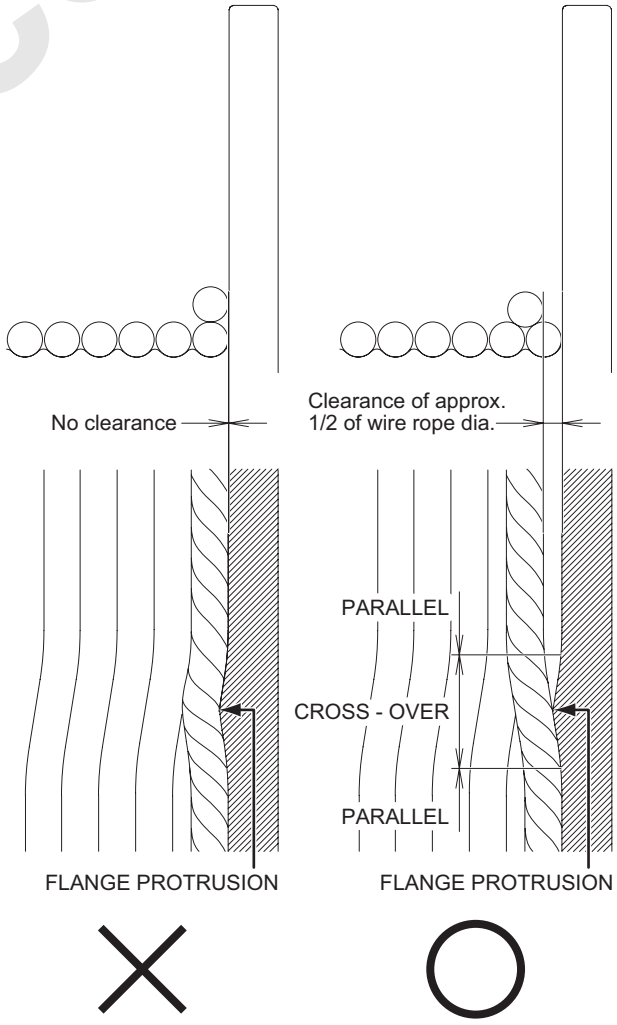

Reference Only

6.1.5 CORRECTING METHOD OF ENTANGLED WIRE ROPE

The wire rope has a tendency to rotate to the direction for returning its lay when the load is applied due to its construction.
This is called “wire rope rotating property”.
In case of high lifting crane or lifting with 2 to 3 parts of line on hook, wire rope may be entangled or lifting load may rotate due to rope rotating property and work safety or efficiency may be suffered.

When the rope becomes entangled due to this wire rope rotating property, correct them as per the following procedure.

1. Type of wire rope lay

   There are two types of wire rope lay, Right hand lay and Left hand lay.
   Be careful about the type of lay.

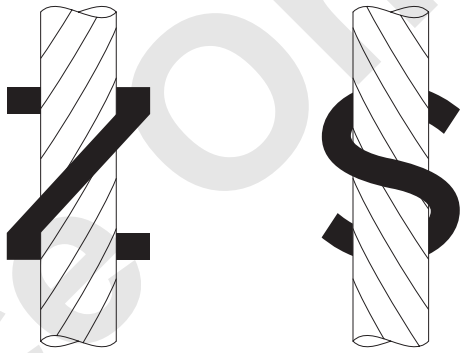

2. Correcting method of entangled wire rope

   To correct the entangled wire rope,make wire rope end free and loosen the wire rope completely.
   Turn the rope socket side end forcibly then repeating hook hoisting or lowering in such way that the applied lay portion will move toward drum side sequentially.
   Perform running in of rope by repeating these.

- Method to provide rotating of rope socket area.
  Rotate the rope socket in the opposite direction as that of the entangled rope hook.

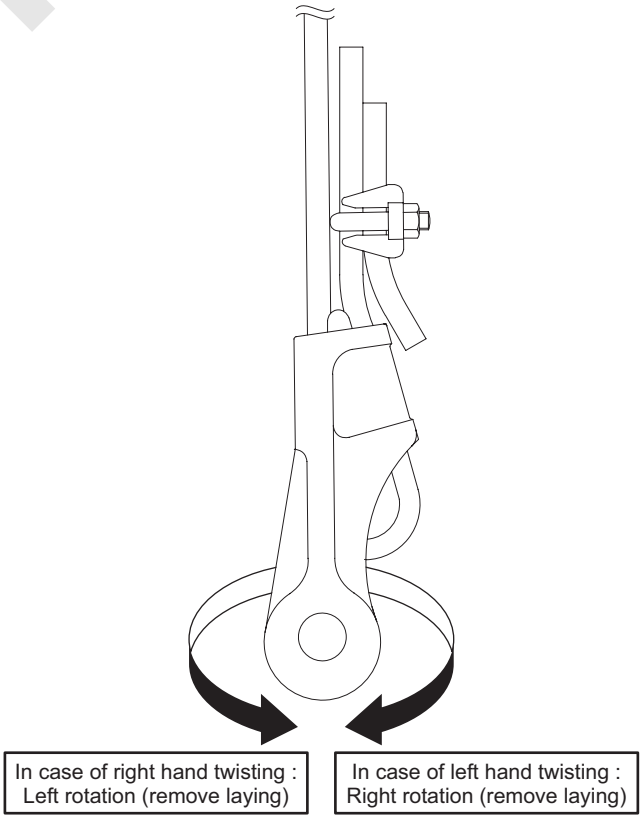

Reference Only

3. Cautions in correcting entangled wire rope

(1) Number of rotation of rope required for correcting entangled rope.
Number of entanglement x rope number of parts of line = correcting rotation number
Number of entanglement : number of rotation of hook

(2) Too many rotation in one trial may cause rope shape deformation.
Since it would be difficult to correct evenly throughout the entire length by one trial, limit the rope rotations to 4 to 5 on one trial.
Repeat the correcting for several times based on the conditions.

(3) The cause of entanglement may vary based on the timing of entanglement occurrence.
Be careful on this point.

If the entanglement occurs just after the rope installation or crane operation, correct them as per the previously mentioned procedure.

If the entanglement occurs sometime after crane work, the following causes can be assumed.

- Wire rope is drawn with the sheave and rope lay move irregularly
- The sheave dia. is too small.
- Wear on sheave groove.
- Fleet angle is too large.

Contact the nearest Manitowoc for the correction.

⚠ CAUTION

Be careful on rope socket rotation due to rope lay when removing the rope socket.
Failure to observe this precaution may result in a serious injury.

(4) Removing method of rope lay of boom hoist drum wire rope.
In the boom hoist drum wire rope, wire rope may cause waving due to wire rope unlay.
In such case, remove the rope socket and take out the rope lay.
At the same time, inspect the sheave rotation.

Reference Only

6.1.6 ROPE SOCKET INSTALLATION

1. Pass the wire rope through the socket and make loop on the rope end.
   Load line of the rope must be in the straight side of the socket.

2. Insert the wedge and pull the wire rope loop with the wedge strongly to secure.

3. Secure the wire rope with the rope clamp.
   Set the rope clamp to the proper direction.

4. Install the socket to the boom or hook and apply the load to the wire rope to pull in the wedge to the final position.
   When installing the rope socket to the boom point, make sure to install in the proper direction.

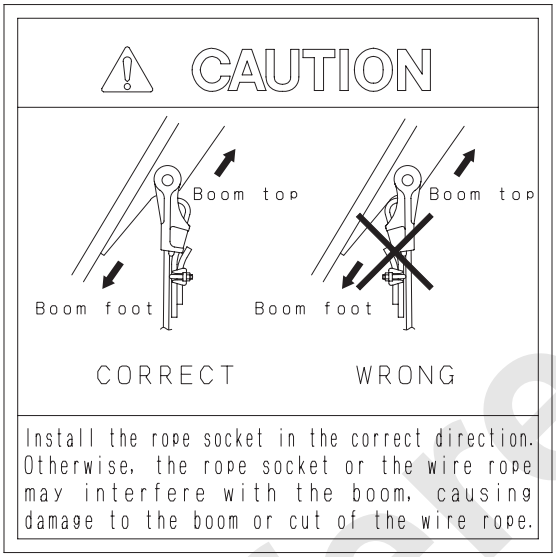

5. When installing the rope socket to the boom, insert the mounting bolt from the boom inner side and secure it with the nut and split pin from outer side.

DANGER

Insert the rope socket mounting bolt from boom inner side and secure it with the nut and split pin at the outer side.
If secured with nut at the inner side, the wire rope and the split pin would interfere and the nut would become loose and fall off.
Failure to observe this precaution may result in a serious accident.

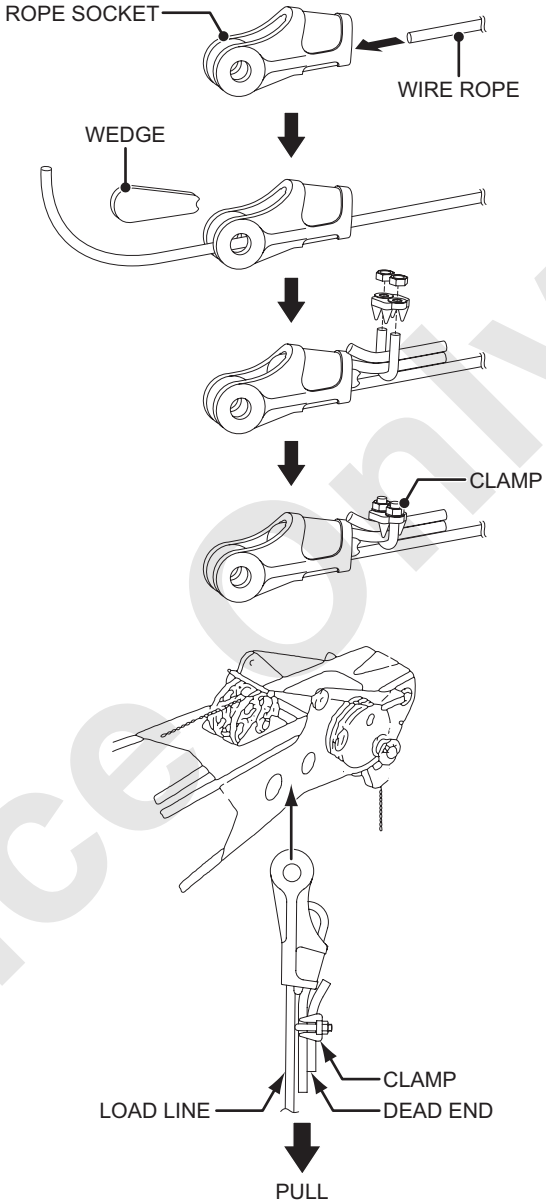

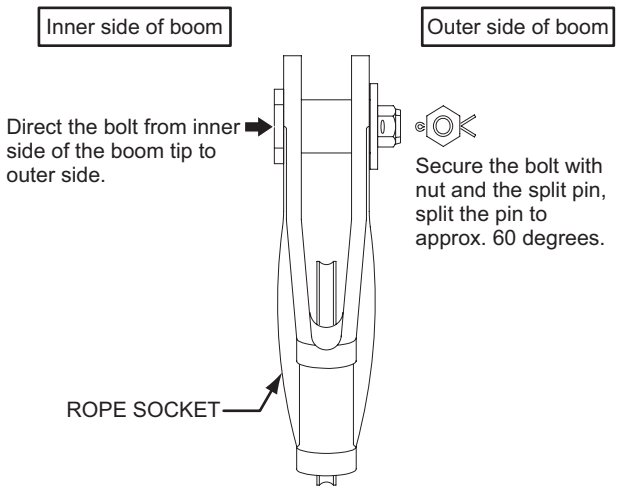

Reference Only

6.1.7 REPLACEMENT STANDARDS FOR WIRE ROPE

1. Check and replacement standards of wire rope

   If the wire rope is broken during operation, it might cause a serious accident.
   Therefore, check the rope periodically.
   Never use those wire ropes that wire-cut, abrasion, corrosion and other defects are observed.
   Such wire rope as given in Items (1) to (5) below must be immediately replaced with a new rope.
   And wire rope subject to damage mentioned in Items (6) onwards should be replaced with new one immediately according to the degree of damage.

TYPE OF WIRE ROPE
• HOOK HOIST WIRE ROPE • BOOM HOIST WIRE ROPE • THIRD DRUM WIRE ROPE (OPTION) • GUY LINE • TAGLINE WIRE ROPE (OPTION) • REEVING WINCH WIRE ROPE (OPTION)

(1) 10% or more steel wires are broken excepting filler wires in one lay of wires.
   Inspection of internal breakage of wires is difficult.
   To check breakage of wires in the valley section of wire ropes, bend the rope sharply.
   Broken element wires, if any, will be exposed.

   If breakage of wires in the valley section is found, it is considered that internal breakage of wires may also have been developed, and that in other words, fatigue of the whole rope may have been developed.

Lay length of wire rope

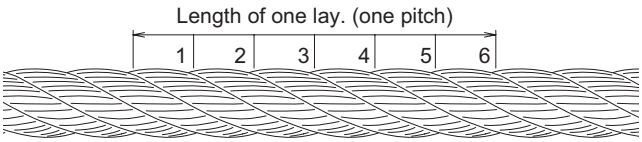

1 to 6 - Strand number

Breakage in the valley

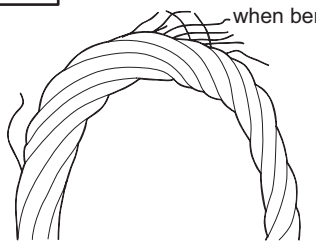

Reference Only

(2) Wire rope of more than 7% (or 5%, under OSHA 1926.1413) reduction in diameter from the nominal diameter, caused by abrasion.

Method of measuring rope diameter.

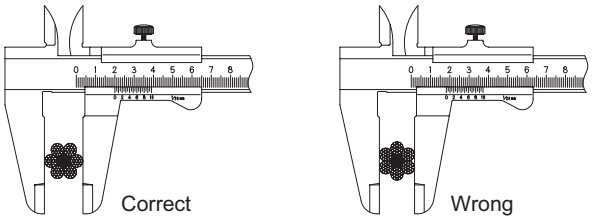

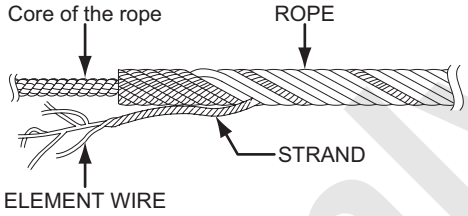

(A) Breaking load and diameter

- Breaking load
  Strength of wire rope is indicated by breaking load. Breaking load is decided on the strength of wire and tensile strength of each class is specified.

⚠ CAUTION

Even on the same diameter rope, different class rope has different breaking load.
Be careful on this point.
Failure to observe this precaution may result in a serious accident.

- Diameter
  Diameter of wire rope will be reduced by wear. Diameter also is reduced by applying overload. Therefore, it is necessary to keep measuring its diameter for safety.

  Do not use the wire rope of which diameter is reduced by 7% from its normal value.

  For example, nominal 22 mm diameter rope
  22 - (22 × 0.07) = 20.46

⚠ CAUTION

To properly wind the wire rope to the drum, it is recommended to use wire rope with its diameter of 3.5 ±1% larger than nominal value.

Reference Only

(B) Measuring method of wire rope diameter
The table below shows how to measure rope diameter.

Outer strand number		Diameter measurement	
Even number strand	6 strands	In the same cross section, take measurement at 3 directions and take average value. $d = \frac{a + b + c}{3}$	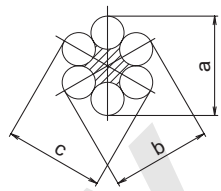
	Others	In the same cross sections, measure on almost 90 degrees angle and take average of two. $d = \frac{a + b}{2}$	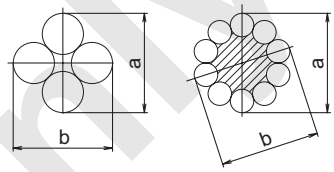
Odd number strand	3 strands	In the same cross section, place the plate with 1/2 to 1 layer length and its known thickness t at 3 positions and take measurement as shown and deduct t from its average value. $d = \frac{a + b + c}{3} - t$	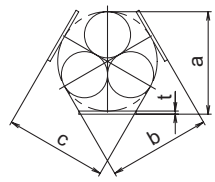
	Others	In the same cross section, place the plate with 1/2 to 1 layer length and its known thickness t at 3 positions and take measurement as shown and deduct t from its average value. $d = \frac{a + b}{2} - t$	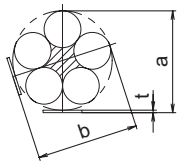

(C) Handling wire rope
Wire rope supports large load and its role is important.
If broken, it will cause a serious accident.
Therefore take extra care in handling wire rope.
Degree of wire rope wear or damage varies remarkably depending on handling method.
Take utmost care in safety matters.

⚠ CAUTION

Do not bend sharply with directly rigged on the sharp corner.
This will affect dramatically the strength of the wire rope.
Put the protective materials on the sharp corner.
Failure to observe this precaution may result in a serious accident.

Reference Only

(3) Kink is observed in the wire rope.

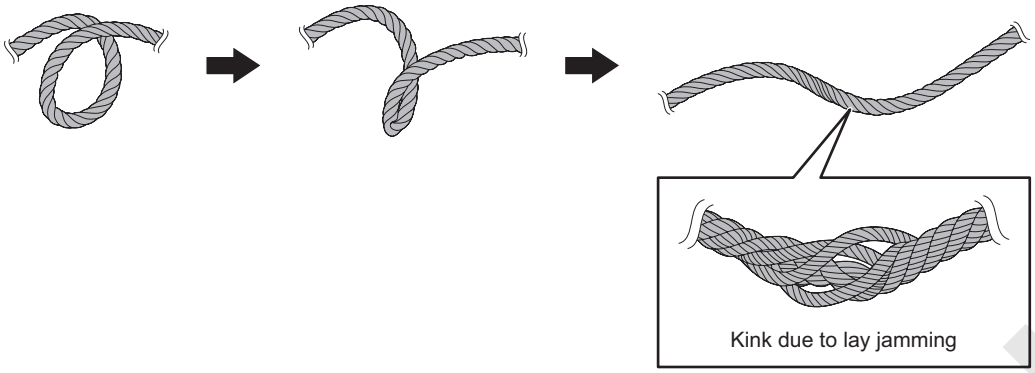

(4) Due to upper layer wire rope with load penetrated into lower layer wire rope and lower wire rope is excessively deformed.
(5) Excessive deformation or corrosion is observed on the wire rope.
(6) Excessive elongation is observed due to overloading or derailment from sheaves.
(7) A short circuit has been formed electrically.
(8) Those wire ropes that are subject to fire or spark by electric current or by gas welding as well as subject to high temperature.

2. Replacement standard for guy line

Since corrosion and damage are caused by fatigue are from the inside of the boom guy line, replacement time cannot be judged from the appearance.
If the guy line is broken by progressing of internal damage and/or corrosion, there is possibility to cause a serious accident.
Be sure to replace the guy line periodically.
Replacement time according to the content of work is shown in the table.

Contents of work	Recommended interval
Normal crane work	6 years
Both crane and clamshell work, or frequent crane work such as loading/ unloading work	4 years
Lifting magnet or clamshell work only	2 years

Reference Only

3. Overhoist limit switch weight rope

   Replace the wire rope as soon as possible if its vinyl insulation is broken or it is subject to the above mentioned replacement standard.

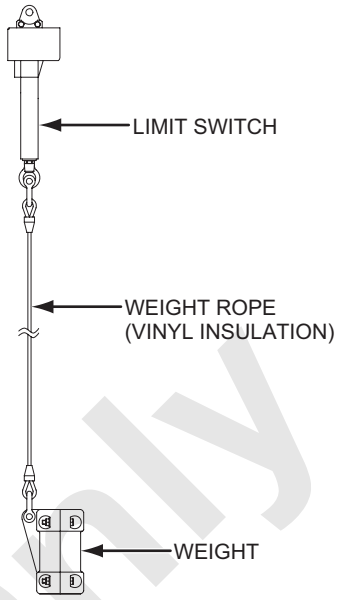

Reference Only

Reference Only

7. MAINTENANCE

7.1 INSPECTION INTERVAL 7-9
7.1.1 TABLE OF INSPECTION POINTS 7-9
7.1.2 TABLE OF OIL, GREASE AND WATER SUPPLY POINTS 7-11
7.2 INSPECTION 7-13
7.2.1 INSPECTION OF UPPER MACHINERY 7-13
7.2.2 INSPECTION OF LOWER MACHINERY 7-20
7.2.3 INSPECTION OF ATTACHMENT 7-22
7.2.4 INSPECTION METHOD OF EACH POINT 7-24
7.3 INSPECTION AND OIL/GREASE AND WATER SUPPLY 7-54
7.3.1 INSPECTION, OIL/GREASE AND WATER SUPPLY POINTS OF UPPER MACHINERY 7-56
7.3.2 LOWER LUBRICATION 7-60
7.3.3 ATTACHMENT LUBRICATION 7-62
7.3.4 INSPECTION, GREASING (WATER SUPPLY) ON EACH POINT 7-64
7.4 REPLACEMENT AND CLEANING/WASHING FILTER ELEMENT AND STRAINER 7-86
7.4.1 REPLACEMENT, CLEANING, WASHING POINTS OF FILTER ELEMENT AND STRAINER 7-86
7.4.2 REPLACEMENT, CLEANING, WASHING METHODS OF FILTER ELEMENT AND STRAINER 7-88
7.5 BATTERY INSPECTION 7-108
7.6 LOCATION AND USE OF FUSE 7-114
7.7 OPERATION UNDER SEVERE CONDITIONS 7-116
7.8 HANDLING OF DIESEL PARTICULATE FILTER 7-120
7.9 MACHINE STORAGE 7-123
7.10 TIGHTENING TORQUE VALUES 7-124
7.11 PERIODICAL REPLACING SECURITY PARTS 7-129
7.12 ADJUSTMENT 7-131
7.12.1 ADJUSTMENT OF FRONT, REAR, THIRD (OPTION) DRUM LOCKS 7-131
7.12.2 ADJUSTMENT OF BOOM DRUM LOCK 7-132
7.12.3 CRAWLER SHOES ADJUSTMENT 7-133
7.13 CONSUMABLE PARTS LIST 7-134
7.14 MEASURES REQUIRED FOR FRONT, REAR WINCH MONITORING 7-142
7.14.1 THEORETICAL SERVICE LIFE 7-142
7.14.2 USED PROPORTION OF THEORETICAL SERVICE LIFE 7-143
7.14.3 DETERMINING OF THE RESIDUAL THEORETICAL SERVICE LIFE 7-147

Reference Only

Reference Only

7. MAINTENANCE

In order to use this machine always safely in the best condition, preventive maintenance is required.

WARNING

When checking the machine, lower the boom down to the ground, stop the engine and engage all locks.
Also remove the keys or battery cables to prevent other personnel from starting the crane while maintenance personnel are at work.
Failure to observe this precaution may result in a serious injury or loss of life.

1. Precautions when perform an inspection and maintenance

- Carry out the inspection and maintenance with a suitable working closes on.
- Be sure to set the machine on a firm and level ground, and post a notice board showing “Under Check and Inspection”.
- The inspection and maintenance in an elevated place be sure use a working scaffold and safety harness.
- When working to perform the inspection and maintenance, determine the fixed signals, and move the machine following the signals.
- When perform the inspection and maintenance of hydraulic components, be careful to prevent dust and dirt from entering.

Reference Only

2. Inspection table

- The following the inspection table is based on the average operation condition.
  Consider the inspection schedule according to the working condition and weather condition.
- The inspection table covers all items, but if an operator and maintenance personnel judges that additional items are necessary, adds them to the inspection items.
- Whenever a question arises regarding the inspection and maintenance, consult the authorized Manitowoc distributor.

WARNING

When necessary repairs or adjustments are noted during an inspection, be sure to complete the repairs or adjustments immediately.

3. Maintenance

- Maintenance
  When replacement of parts and readjustment are required by check, immediately replace or adjust.
  If repair is necessary, consult the authorized Manitowoc distributor.

- Parts
  Use se the Manitowoc genuine parts for replacement parts and Manitowoc recommended lubricant to be used in order to keep performance of the machine.
  The consumable items such as elements, etc. must be replaced somewhat early in order to prevent deterioration.
  Any questions, regarding the check and maintenance, consult the authorized Manitowoc distributor.

Reference Only

4. Precautions when perform the inspections and maintenance

- Be sure to use Manitowoc genuine parts for replacement parts and Manitowoc specified lubricant to be used.

CAUTION

The warranty does not cover malfunctions caused by the use of parts other than Manitowoc specified. (Genuine oil, grease and filter).

- Do not use fuel other than specified one.

WARNING

- **Use ultra-low sulfur diesel fuel only (S50 : sulfur content lower than 50 ppm).**
  (For the cold region, use suitable low sulfur fuel in the area.)
  Confirm again if it is the proper type of fuel before refilling.
  Failure to observe this precaution may result of adverse effect to the environmental and white smoke.
- **If fuel other than specified one is used, adverse effect may be caused to the engine or emission control device and white smoke or failure may be resulted.**

- Use recommended engine oil.

CAUTION

In order to keep good function of the emission control devices, it is recommended to use the specified brand (recommended) engine oil.

Reference Only

- Use clean oil and grease.
  Keep the containers for oil and grease to prevent dust and water from entering.
  Be sure to use clean oil and grease.

- Clean machine.
  Wash the machine to make finding of oil leak, crack, loosening and other wrong condition easy.
  Especially, clean grease fittings, breathers and oil level gauge parts (window for check of oil), and avoid entering of dust.

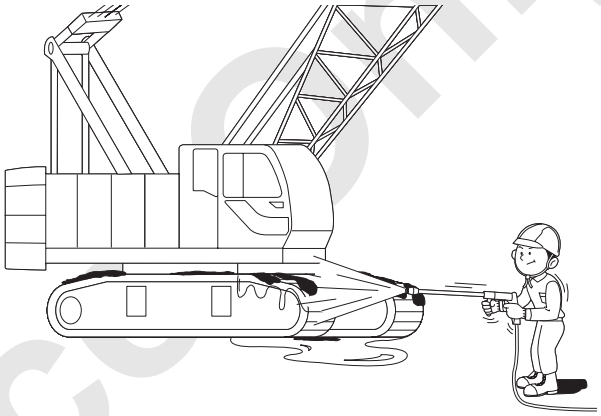

- Disposal of spilled oil.
  Leaving oil spilled when refilling or replacing fuel, hydraulic oil, various lubricants, or replacing the filter, may lead to a fire accident.
  Thoroughly wipe it.

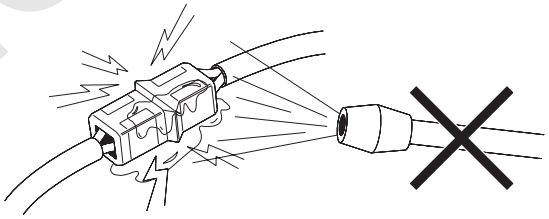

- Caution when washing the machines.
  Do not aim pressure wash or steam directly to electric parts and connectors.

Reference Only

- Place a warning plate before inspection.
  When perform the inspection and maintenance, be sure to indicate warning plate “Do not start the engine, under inspection” to the control lever.

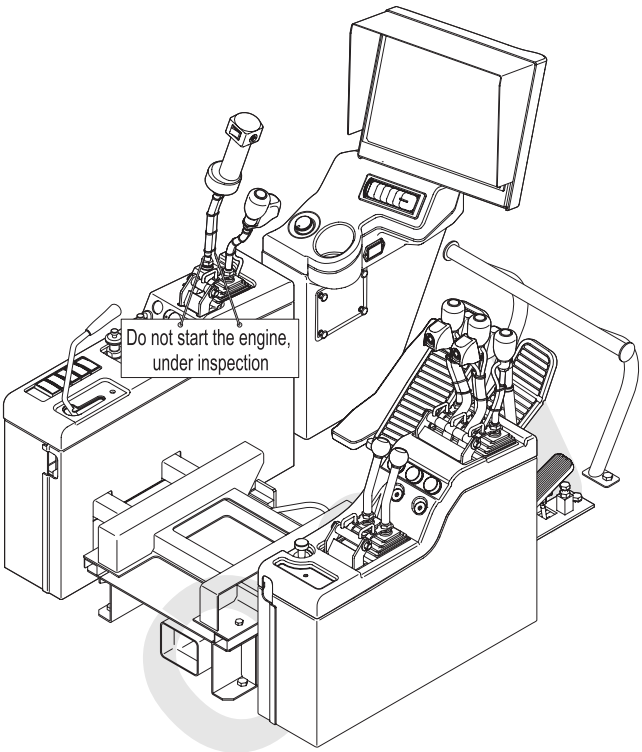

- Keep fire away.
  Wastes with oil and combustibles should be stored in a safe place without fire.
  Confirm the storage position and using method of fire extinguisher for emergency.

- Pay attention to moving parts!
  When checking fan belt tension or water pump, it may become entangled in moving machinery.
  Stop the engine, then work.

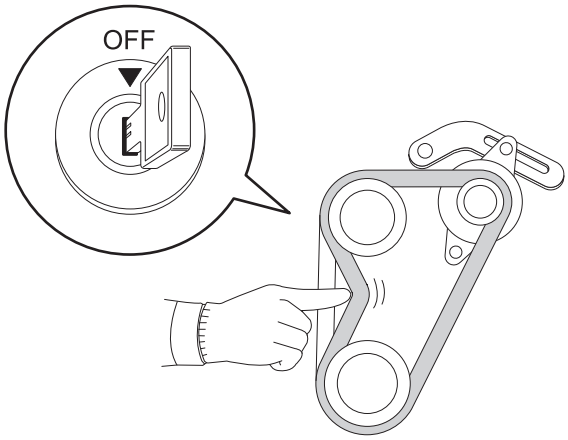

Reference Only

- Pay attention to temperature of water and oil.
  Since draining oil, cooling water and replacing filters just after the engine stops is dangerous, wait until the temperature lowers, then perform these works.
  However, oil is cold case, rise the oil temperature to approximate 20 °C to 50 °C (68°F to 122°F).

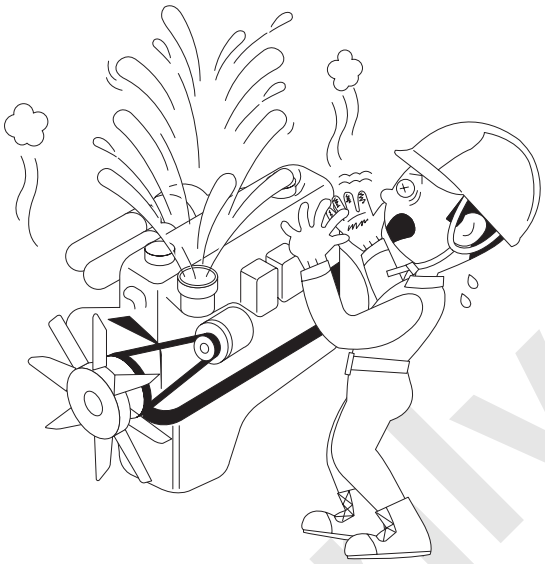

- Check the drained oil and filter.
  When replacing oil or filter, check the drained oil and oil filter to see if the significant amount of metal powder or foreign material are included.

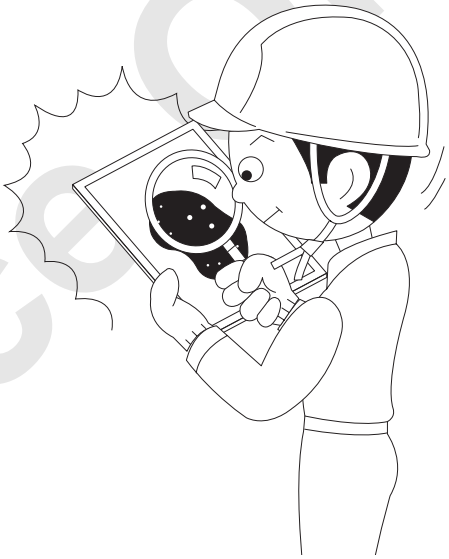

- Pay attention to dust.
  Install the clean plug or cap to the oil holes of the disconnected hyd. hoses to prevent contamination of foreign material.

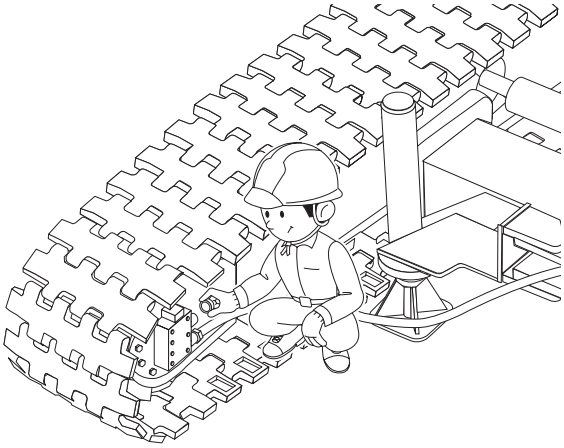

Reference Only

- Clean mounting surfaces.
  When sealing sections of O-rings and gaskets were removed, clean the mounting surfaces, then replace with new ones.
  When assembling, apply a thin coat of oil to the seals.

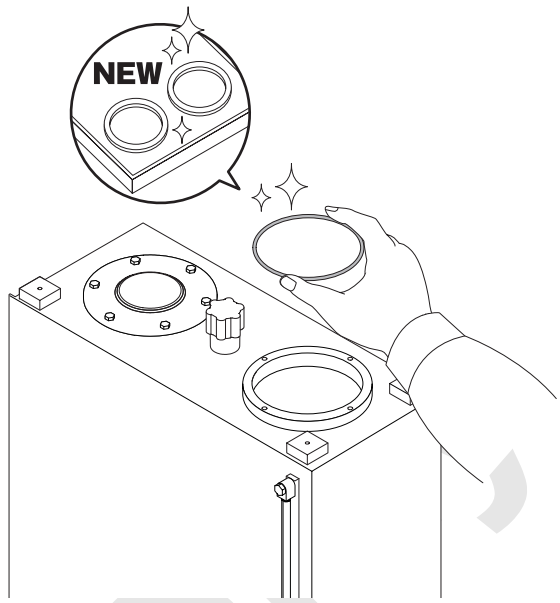

- Pay attention to internal pressure.
  When removing hydraulic system, air system, fuel system or pipings and connectors of cooling system and other related parts which have internal pressure, bleed internal pressure beforehand.

- Precaution when welding.

1. Turn off power supply (turn the key switch off).
2. Disconnect the cable of ⊖ side of the battery.
3. Do not apply voltage more than 200 volts continuously.
4. Provide earth (ground) within 1 meter from the welding section.
5. There should be no seal and bearing to enter between the welding section and earth point.
6. When welding near the load safety device and controller, remove them to prevent damage.

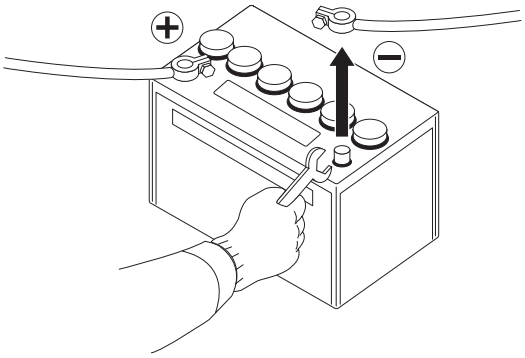

Reference Only

- Treatment of drained oil.
  Be sure to drain discarded oil into a container, and treat it as industrial discharges.

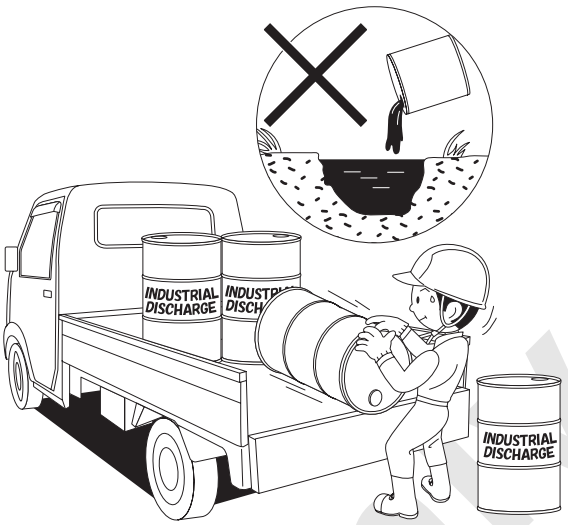

- Caution for adjustment, disassembly.
  Never adjust or disassembly the engine, hydraulic component and the electronic components (controller etc.).
  Failures due to unauthorized modification, unauthorized parts installation or wrong handling of components would not be covered by WARRANTY.

Reference Only

7.1 INSPECTION INTERVAL

7.1.1 TABLE OF INSPECTION POINTS

The number in the list below is corresponding to the figure and table on “7.2 INSPECTION”.

Item	Inspection point	Check interval (hourmeter : Hr)					
		8	50	100	250	500	1,000
Upper machinery	1. FUEL AND HYDRAULIC LINES	○					
	2. ENGINE	○					
	3. HOSE, PIPING AND CONNECTOR *	○					
	4. SWING BRAKE	○					
	5. SWING LOCK	○					
	6. CONTROL LEVER, BRAKE PEDAL	○					
	7. GANTRY	○					
	8. HORN, WORK LIGHT AND WIPER	○					
	9. AIR CLEANER	○					
	10. PIN, LINK AND COTTER PIN *	○					
	11. BOLT AND NUT *	○					
	12. HOOK OVERHOIST PREVENTIVE DEVICE	○					
	13. BOOM OVERHOIST PREVENTIVE DEVICE	○					
	14. LOAD SAFETY DEVICE, MONITOR	○					
	15. DRUM LOCK	○					
	16. WINDOW GLASS, STEP, HANDLE AND GUARD	○					
	17. DRUM BRAKE DISK (FRONT, REAR, THIRD [OPTION])	○					
	18. FUEL FILTER		○				
	19. FAN BELT			○			
	20. RADIATOR AND OIL COOLER			○			
	21. ENGINE MOUNTING BOLT AND RUBBER MOUNT			○			
	22. POWER DIVIDER			○			
	23. HYDRAULIC MOTOR AND REDUCTION UNIT			○			
	24. VALVE, ETC.			○			
	25. HYDRAULIC PUMP			○			
	26. GANTRY CYLINDERS			○			
	27. DRUM LOCK PAWL, DRUM RATCHET			○			
	28. FUEL SUPPLY PUMP AND HOSE (OPTION)			○			
	29. SWING ALARM			○			
	30. ACCUMULATOR					○	
	31. SWING FRAME, COUNTERWEIGHT (1)					○	
	32. SCR *						○

* Not shown on the figure of “7.2 INSPECTION”.

Reference Only

Item	Inspection point	Check interval (hourmeter : Hr)				
		8	50	100	250	500
Lower machinery	33. HOSE, PIPING AND CONNECTOR	○				
	34. PIN, LINK AND COTTER PIN *	○				
	35. BOLT AND NUT *	○				
	36. HYDRAULIC MOTOR AND REDUCTION UNIT			○		
	37. VALVE, ETC.			○		
	38. CRAWLER EXTEND/RETRACT CYLINDER			○		
	39. VERTICAL CYLINDER (OPTION)			○		
	40. SWIVEL JOINT			○		
	41. SWING BEARING			○		
	42. CRAWLER SHOE			○		
	43. DRIVE TUMBLER, IDLER WHEEL AND UPPER/LOWER ROLLER				○	
	44. SWING BEARING MOUNTING BOLT				○	
	45. CARBODY, CRAWLER FRAME					○
Attachment	46. UPPER SPREADER AND LOWER SPREADER	○				
	47. HOOK AND LATCH	○				
	48. CABLE ROLLER AND GUIDE ROLLER	○				
	49. SHEAVE	○				
	50. BOOM AND JIB	○				
	51. PIN, LINK AND COTTER PIN *	○				
	52. BOLT AND NUT *	○				
	53. BACKSTOP	○				
	54. JIB STRUT	○				
	55. WIRE ROPE AND GUY LINE	○				
	56. LOAD DETECTOR ROPE SOCKET PIN, BOLT, NUT	○				
	57. HOIST WIRE ROPE CLAMP BOLT	○				

* Not shown on the figure of “7.2 INSPECTION”.

OSHA : 1926.1412 Inspections

Item	Content	Every shift	Every month	Every year
Ground conditions	Soil, water inclusion	○	○	○
Equipment leveling	Horizontalness shall satisfy maker's recommendation	○	○	○
Warning labels and decals	Missing, unreadable condition	–	–	○
Operator seat	Not appropriate for use	–	–	○

Reference Only

7.1.2 TABLE OF OIL, GREASE AND WATER SUPPLY POINTS

The number in the list below is corresponding to the figure and table on “7.3 INSPECTION AND OIL/ GREASE AND WATER SUPPLY”.

Item	Inspection point	Check interval (hourmeter : Hr)						
		8	50	100	250	500	1,000	2,000
Upper machinery	1. REFUELING *1	○						
	2. ENGINE OIL LEVEL CHECK	○						
	3. CHECKING OF COOLANT LEVEL	○						
	4. CHECK OF HYDRAULIC OIL LEVEL	○						
	5. GREASING OF DRUM LOCK		○					
	6. DRAIN OF HYDRAULIC OIL TANK		○					
	7. OIL LEVEL CHECK OF SWING REDUCTION UNIT			○				
	8. OIL LEVEL CHECK OF POWER DIVIDER			○				
	9. GREASING OF DRUM SHAFT BEARING (FRONT, REAR, THIRD DRUM [OPTION])				○			
	10. OIL LEVEL CHECK OF REDUCTION UNIT (FRONT, REAR, THIRD DRUM [OPTION])				○			
	11. OIL LEVEL CHECK OF REDUCTION UNIT (BOOM DRUM)				○			
	12. ENGINE OIL CHANGE *2				○			
	13. DRAIN OF FUEL TANK					○		
	14. CHANGE OF COOLANT						○	
	15. OIL CHANGE OF SWING REDUCTION UNIT						○	
	16. OIL CHANGE OF REDUCTION UNIT (FRONT, REAR, THIRD DRUM [OPTION])						○	
	17. OIL CHANGE OF REDUCTION UNIT (BOOM DRUM)						○	
	18. OIL CHANGE OF POWER DIVIDER						○	
	19. CHANGE OF HYDRAULIC OIL							○
	20. INSPECT WATER LEVEL OF WASHER TANK							○

*1 Perform as required.

*2 Perform when at first 30 hours from new and after overhauling too.

Reference Only

Item	Inspection point	Check interval (hourmeter : Hr)						
		8	50	100	250	500	1,000	2,000
Lower machinery	21. GREASING OF SWING BEARING		○					
	22. OIL LEVEL CHECK OF TRAVEL REDUCTION UNIT				○			
	23. GREASING OF SWING BEARING RING GEAR *3				○			
	24. GREASING OF AXLE EXTENSION				○			
	25. GREASING OF TRANSLIFTER PIN				○			
	26. OIL CHANGE OF TRAVEL REDUCTION UNIT						○	
	27. OIL CHANGE OF LOWER ROLLER *4							
	28. OIL CHANGE OF UPPER ROLLER *4							
	29. OIL CHANGE OF IDLER WHEEL *4							

*3 Perform weekly or every 50 hours whichever comes first in case of the swing boom method operation such as the clamshell and/or lifting magnet operation.

*4 Since no abnormal is found, perform replacement of oil at overhauling at authorized Manitowoc distributor.

Item	Inspection point	Check interval (hourmeter : Hr)						
		8	50	100	250	500	1,000	2,000
Attachment	30. GREASING OF BOOM FOOT PIN	○						
	31. GREASING OF GANTRY LINK	○						
	32. GREASING OF HOOK SHEAVE		○					
	33. GREASING OF HOOK BEARING		○					
	34. GREASING OF BALL HOOK BEARING		○					
	35. GREASING OF BOOM POINT SHEAVE *5 *6					○	○	
	36. GREASING OF IDLER SHEAVE *5 *6					○	○	
	37. GREASING OF AUXILIARY SHEAVE *5 *6					○	○	
	38. GREASING OF UPPER SPREADER SHEAVE *5 *6					○	○	
	39. GREASING OF LOWER SPREADER SHEAVE *5 *6					○	○	
	40. GREASING OF GANTRY PEAK SHEAVE *5 *6					○	○	
	41. GREASING OF STRUT SHEAVE *5						○	
	42. GREASING OF STRUT EQUALIZER SHEAVE *5						○	
	43. GREASING OF JIB POINT SHEAVE *5						○	
	44. LUBRICATION OF FRONT, REAR DRUM HOIST WIRE ROPE *7							
	45. LUBRICATION OF BOOM DRUM HOIST WIRE ROPE *7							
	46. LUBRICATION OF BOOM GUY LINE *7							
	47. LUBRICATION OF JIB GUY LINE *7							

*5 Apply grease to the sheave by replacing a plug with a grease nipple.
In case of general crane work, grease on every 1,000 hours.

*6 Perform half yearly or every 500 hours whichever comes first in case of the swing boom method operation such as the clamshell and/or lifting magnet operation.

*7 Apply lubricant to the wire rope based on work condition.
Use brush or spray when applying lubricant to wire rope.

Reference Only

7.2 INSPECTION

7.2.1 INSPECTION OF UPPER MACHINERY

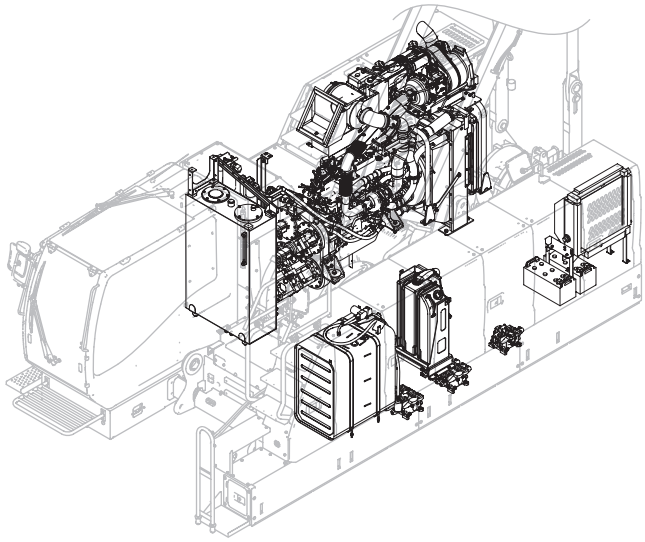

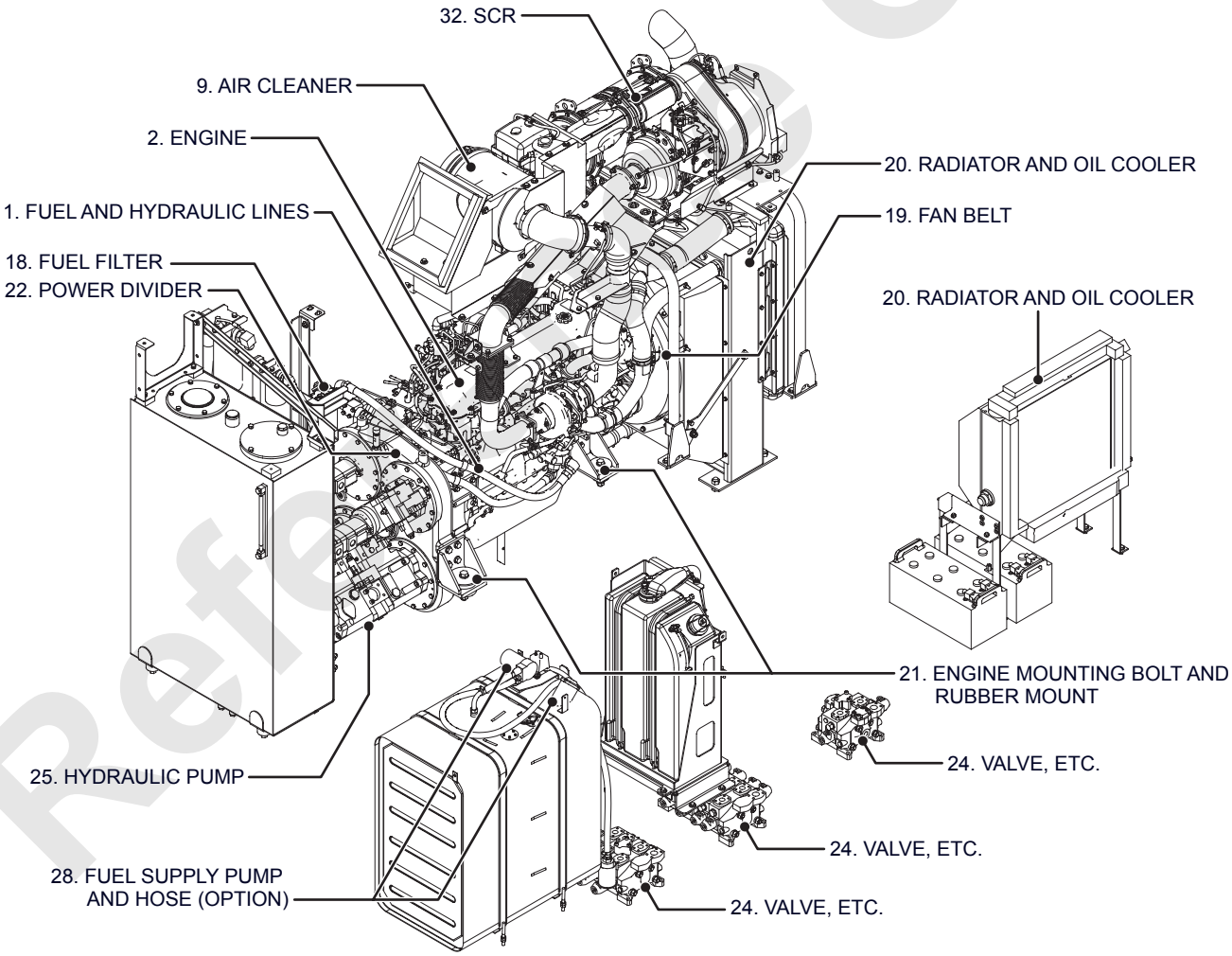

Reference Only

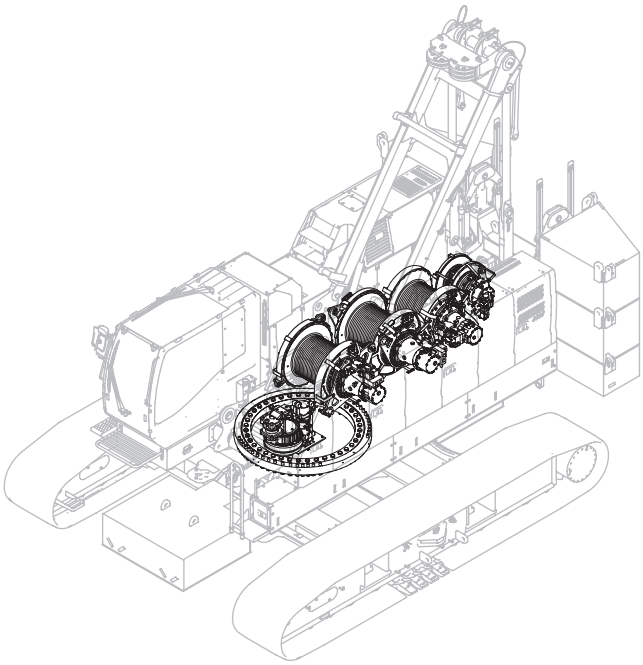

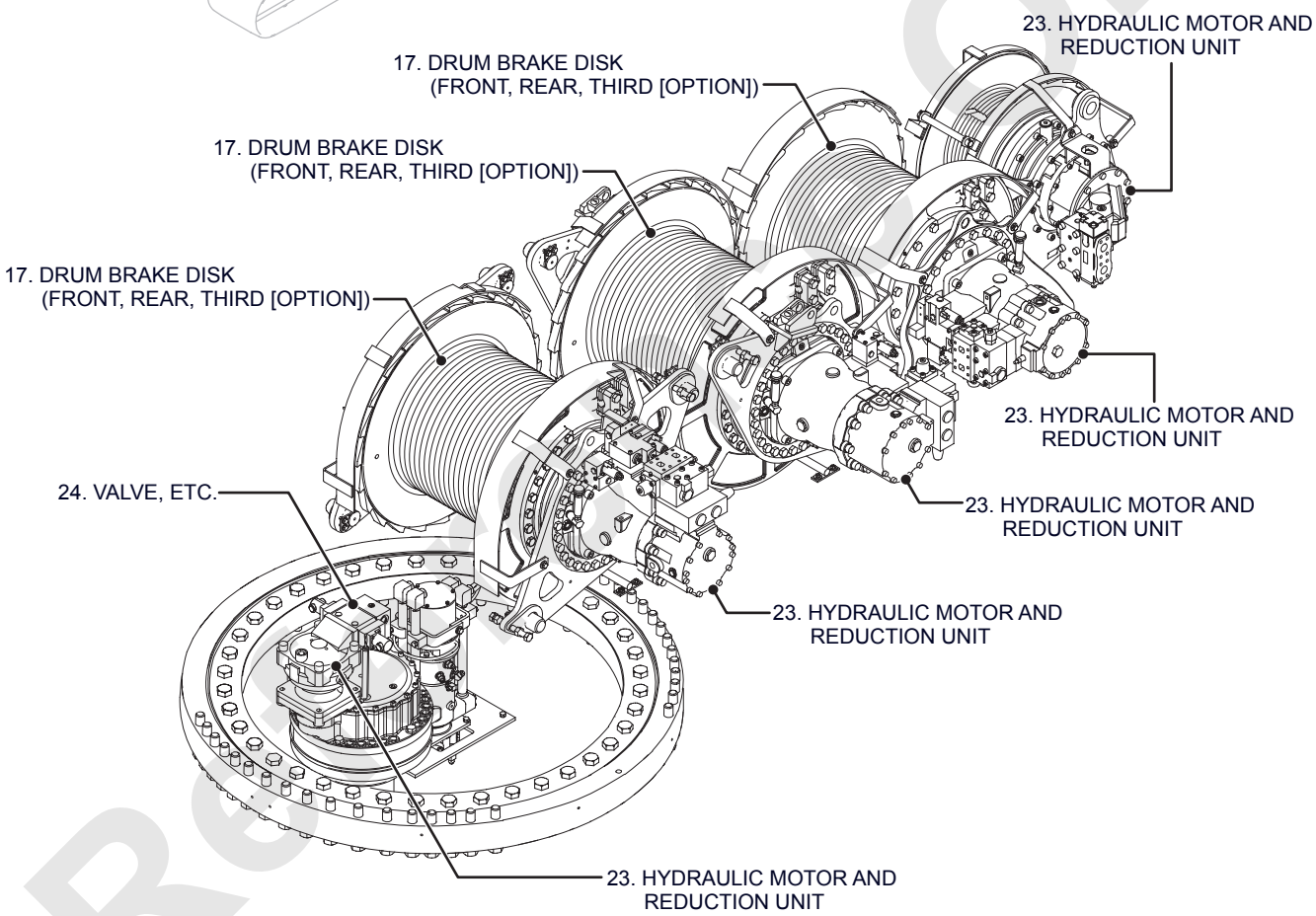

Reference Only

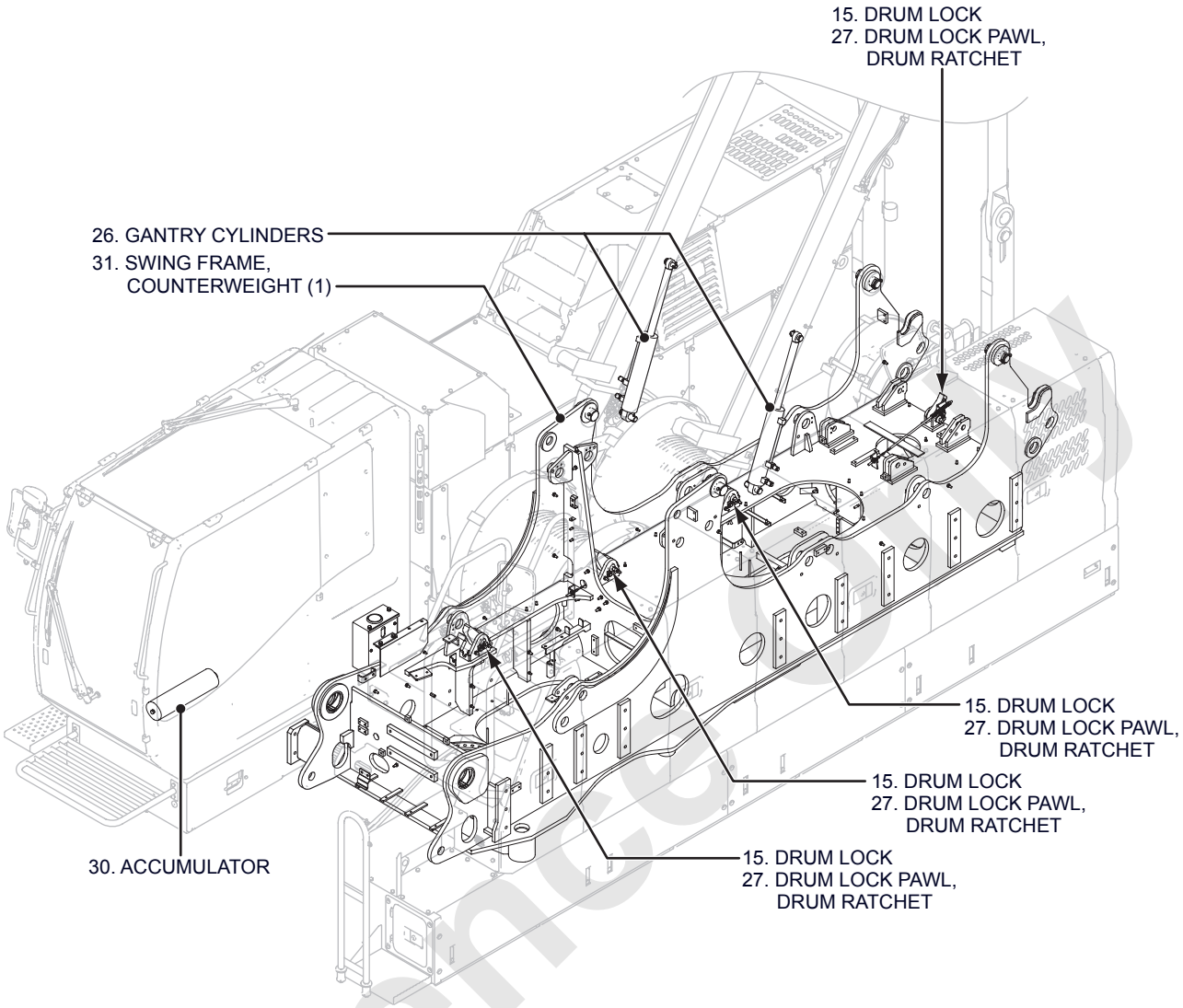

Reference Only

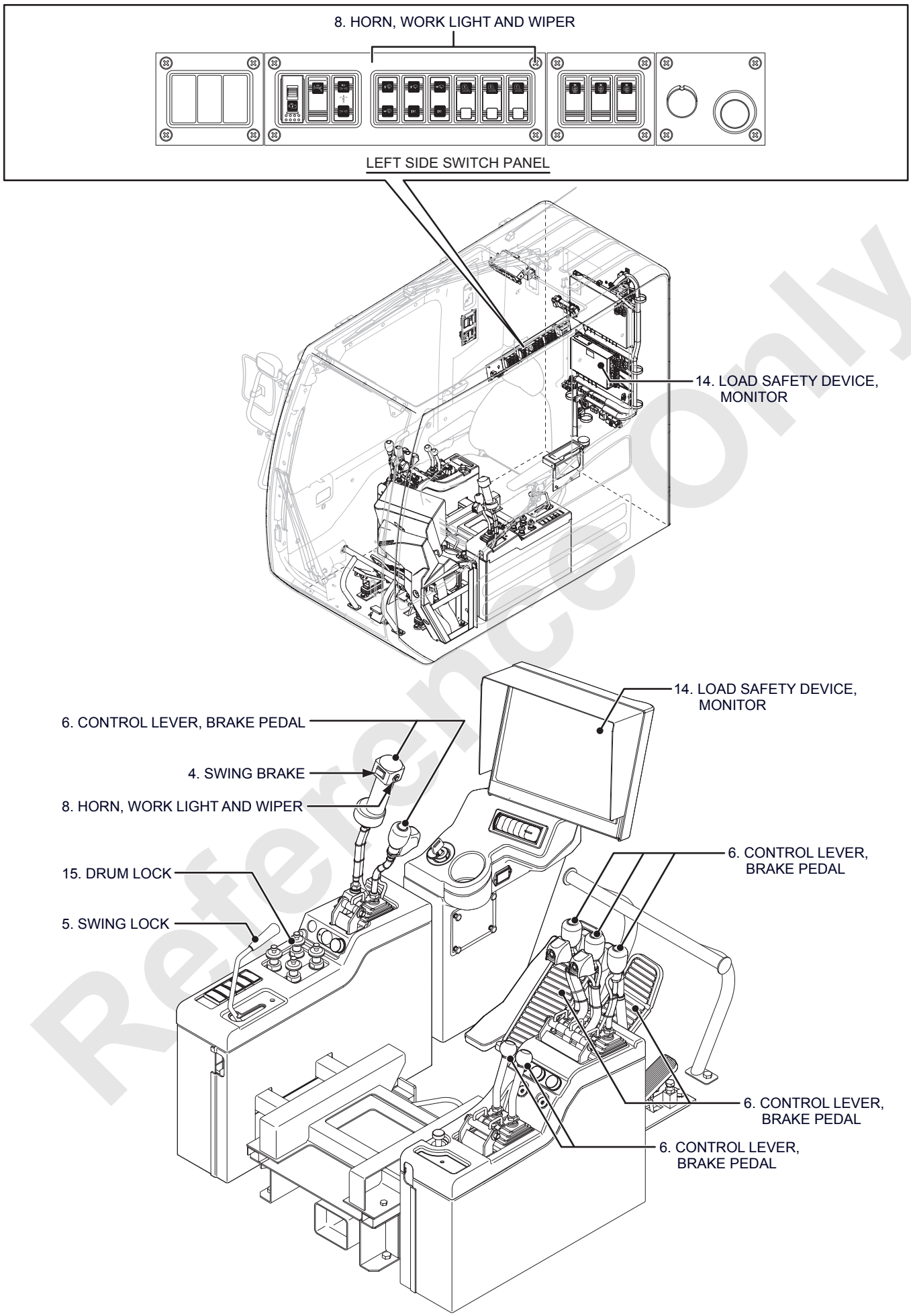

Reference Only

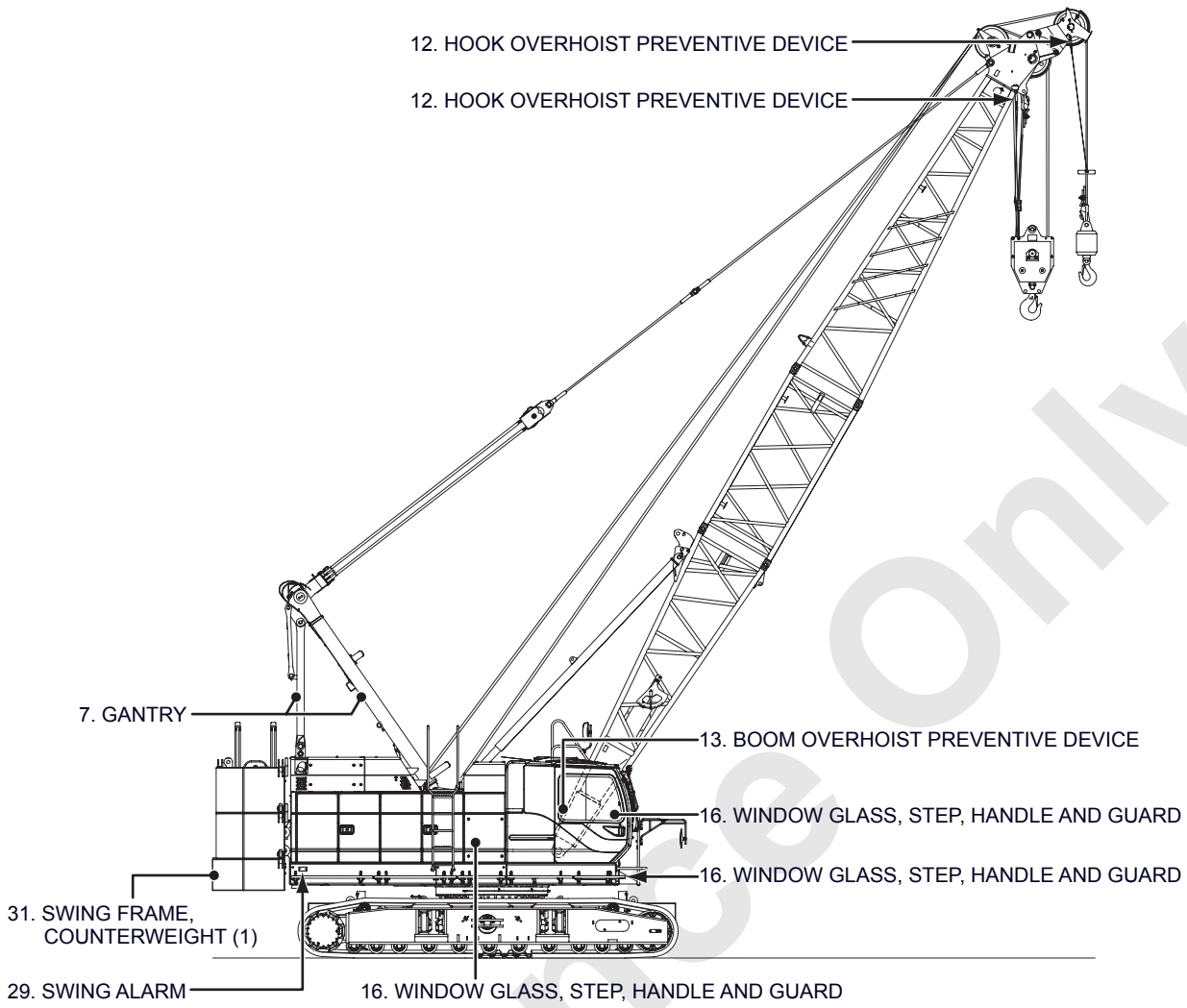

Reference Only

The number in the list below is corresponding to the figure and table on “7.2.4 INSPECTION METHOD OF EACH POINT”.

TABLE OF INSPECTION POINTS OF UPPER MACHINERY

Check interval	Identification	Check item	Check method	Reference page
Daily or every 8 hours (Every shift)	1. FUEL AND HYDRAULIC LINES	Damage	Visual check	P.7-24
	2. ENGINE	Starting, leak, unusual noise	Starting, check by hearing	P.7-24
	3. HOSE, PIPING AND CONNECTOR *	Oil leak	Visual check	P.7-24
	4. SWING BRAKE	Effectiveness	Operation	P.7-25
	5. SWING LOCK	Performance	Operation	P.7-25
	6. CONTROL LEVER, BRAKE PEDAL	Play, deformation	Operation, visual check	P.7-26
	7. GANTRY	Deformation, crack	Visual check	P.7-26
	8. HORN, WORK LIGHT AND WIPER	Performance	Operation, visual check	P.7-26
	9. AIR CLEANER	Missing (indicator)	Visual check	P.7-27
	10. PIN, LINK AND COTTER PIN *	Damage, missing	Visual check	P.7-27
	11. BOLT AND NUT *	Looseness, missing	Visual check	P.7-27
	12. HOOK OVERHOIST PREVENTIVE DEVICE	Performance	Operation	P.7-27
	13. BOOM OVERHOIST PREVENTIVE DEVICE	Performance	Operation	P.7-27
	14. LOAD SAFETY DEVICE, MONITOR	Performance	Operation	P.7-27
	15. DRUM LOCK	Performance	Operation	P.7-28
	16. WINDOW GLASS, STEP, HANDLE AND GUARD	Damage, crack, missing	Visual check	P.7-28
	17. DRUM BRAKE DISK (FRONT, REAR, THIRD [OPTION])	Wear (indicator)	Visual check	P.7-29
Weekly or every 50 hours	18. FUEL FILTER	Water level	Visual check	P.7-30

* Not shown on the figure of “7.2.1 INSPECTION OF UPPER MACHINERY”.

Reference Only

TABLE OF INSPECTION POINTS OF UPPER MACHINERY

Check interval	Identification	Check item	Check method	Reference page
Monthly or every 100 hours	19. FAN BELT	Looseness, damage	Push with finger, visual check	P.7-32
	20. RADIATOR AND OIL COOLER	Oil leak, damage	Visual check	P.7-35
	21. ENGINE MOUNTING BOLT AND RUBBER MOUNT	Looseness, damage	Visual check, test hammer	P.7-35
	22. POWER DIVIDER	Oil leak, unusual noise	Visual check, check by hearing	P.7-35
	23. HYDRAULIC MOTOR AND REDUCTION UNIT	Oil leak, unusual noise	Visual check, check by hearing	P.7-36
	24. VALVE, ETC.	Oil leak	Visual check	P.7-36
	25. HYDRAULIC PUMP	Oil leak, unusual noise	Visual check, check by hearing	P.7-36
	26. GANTRY CYLINDERS	Oil leak, damage	Visual check	P.7-37
	27. DRUM LOCK PAWL, DRUM RATCHET	Wear, damage	Visual check	P.7-37
	28. FUEL SUPPLY PUMP AND HOSE (OPTION)	Performance, damage	Operation, visual check	P.7-38
	29. SWING ALARM	Alarm sound, lamp	Operation, visual check	P.7-39
Half yearly or every 500 hours	30. ACCUMULATOR	Oil leak, damage	Visual check	P.7-40
	31. SWING FRAME, COUNTERWEIGHT (1)	Damage, deformation crack	Visual check	P.7-40
Yearly or every 1,000 hours	32. SCR *	Damage, crack, leak	Visual check	P.7-41

* Not shown on the figure of “7.2.1 INSPECTION OF UPPER MACHINERY”.

Reference Only

7.2.2 INSPECTION OF LOWER MACHINERY

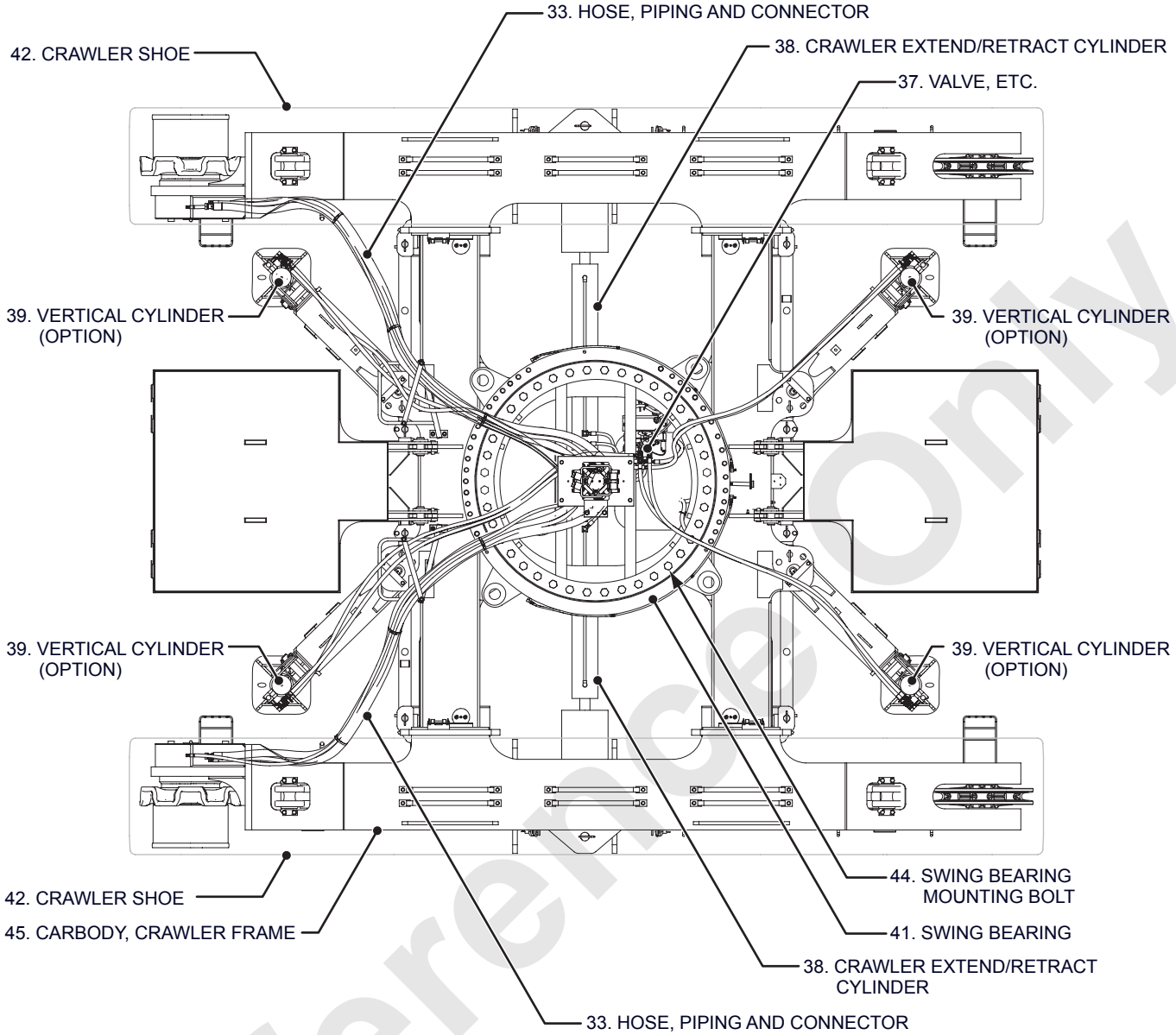

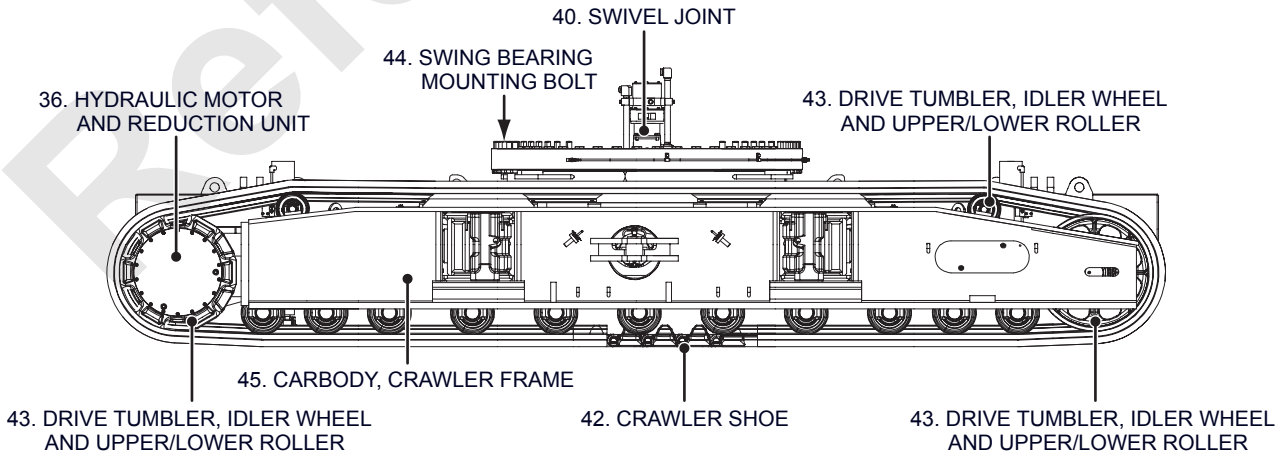

Reference Only

The number in the list below is corresponding to the figure and table on “7.2.4 INSPECTION METHOD OF EACH POINT”.

TABLE OF INSPECTION POINTS OF LOWER MACHINERY

Check interval	Identification	Check item	Check method	Reference page
Daily or every 8 hours (Every shift)	33. HOSE, PIPING AND CONNECTOR	Oil leak, damage	Visual check	P.7-42
	34. PIN, LINK AND COTTER PIN *	Damage, missing	Visual check	P.7-42
	35. BOLT AND NUT *	Looseness, missing	Visual check	P.7-42
Monthly or every 100 hours	36. HYDRAULIC MOTOR AND REDUCTION UNIT	Oil leak, unusual noise	Visual check	P.7-42
	37. VALVE, ETC.	Oil leak	Visual check	P.7-42
	38. CRAWLER EXTEND/RETRACT CYLINDER	Oil leak, damage	Visual check	P.7-42
	39. VERTICAL CYLINDER (OPTION)	Oil leak, damage	Visual check	P.7-42
	40. SWIVEL JOINT	Oil leak	Visual check	P.7-43
	41. SWING BEARING	Unusual noise	Check by hearing	P.7-43
	42. CRAWLER SHOE	Extension, damage, wear	Visual check	P.7-43
Quarterly or every 250 hours	43. DRIVE TUMBLER, IDLER WHEEL AND UPPER/ LOWER ROLLER	Oil leak, damage	Visual check	P.7-44
	44. SWING BEARING MOUNTING BOLT	Looseness, missing	Visual check	P.7-44
Half yearly or every 500 hours	45. CARBODY, CRAWLER FRAME	Damage, deformation crack	Visual check	P.7-45

* Not shown on the figure of “7.2.2 INSPECTION OF LOWER MACHINERY”.

Reference Only

7.2.3 INSPECTION OF ATTACHMENT

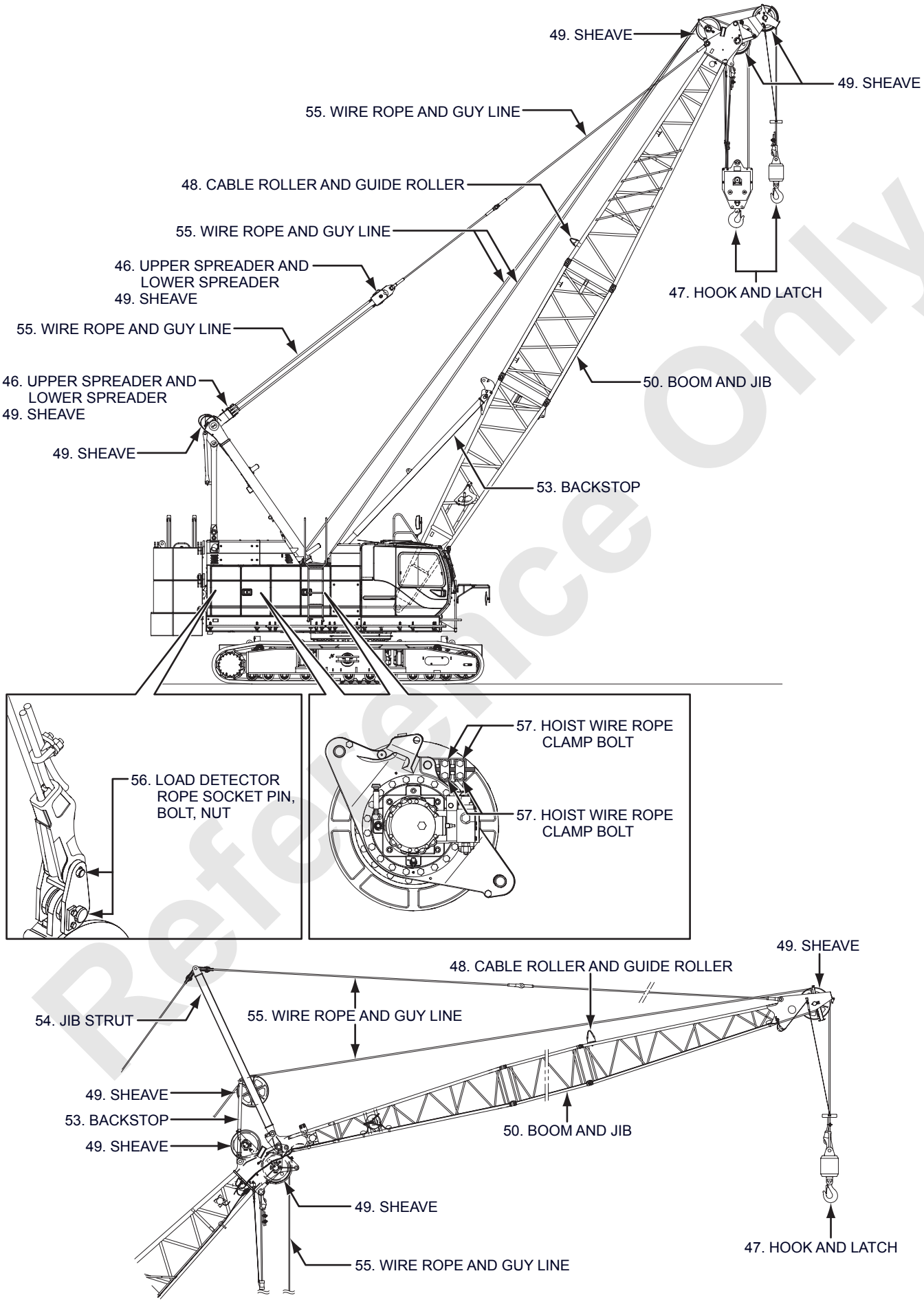

Reference Only

The number in the list below is corresponding to the figure and table on “7.2.4 INSPECTION METHOD OF EACH POINT”.

TABLE OF INSPECTION POINTS OF ATTACHMENT

Check interval	Identification	Check item	Check method	Reference page
Daily or every 8 hours (Every shift)	46. UPPER SPREADER AND LOWER SPREADER	Deformation, crack	Visual check	P.7-46
	47. HOOK AND LATCH	Damage, looseness	Visual check	P.7-46
	48. CABLE ROLLER AND GUIDE ROLLER	Damage, deformation, wear	Visual check	P.7-46
	49. SHEAVE	Damage, deformation, wear	Visual check	P.7-47
	50. BOOM AND JIB	Damage, deformation	Visual check	P.7-47
	51. PIN, LINK AND COTTER PIN *	Damage, missing	Visual check	P.7-47
	52. BOLT AND NUT *	Looseness, missing	Visual check	P.7-47
	53. BACKSTOP	Damage, deformation	Visual check	P.7-48
	54. JIB STRUT	Damage, deformation	Visual check	P.7-48
	55. WIRE ROPE AND GUY LINE	Damage, deformation, wear	Visual check	P.7-49
	56. LOAD DETECTOR ROPE SOCKET PIN, BOLT, NUT	Looseness, missing	Visual check	P.7-49
	57. HOIST WIRE ROPE CLAMP BOLT	Looseness, missing	Visual check	P.7-50

* Not shown on the figure of “7.2.3 INSPECTION OF ATTACHMENT”.

Reference Only

7.2.4 INSPECTION METHOD OF EACH POINT

[CHECK OF UPPER MACHINERY]

DAILY OR EVERY 8 HOURS (EVERY SHIFT)

1. FUEL AND HYDRAULIC LINES

Check the fuel and hydraulic lines for damage and leak.

WARNING

- **Carefully wipe off any fuel splashed on to the engine or its parts.**
  Otherwise it may cause of fire.
  Failure to observe this precaution may result in a serious accident.
- **If fuel or hydraulic oil leak is observed, repair leak and remove adhered fuel/oil immediately.**
  Failure to observe this precaution may result in a serious accident.

2. ENGINE

Start the engine to confirm proper starting condition and listen for unusual noise.

3. HOSE, PIPING AND CONNECTOR

Check the hose, piping and connector, etc. for oil leaks and damage.

Reference Only

4. SWING BRAKE

Confirm that the swing brake is functioning properly.
With the swing brake switch in the ENGAGE position, operate the swing control lever to confirm the swing brake is functioning properly.
When the swing brake is engaged, swinging is not possible.

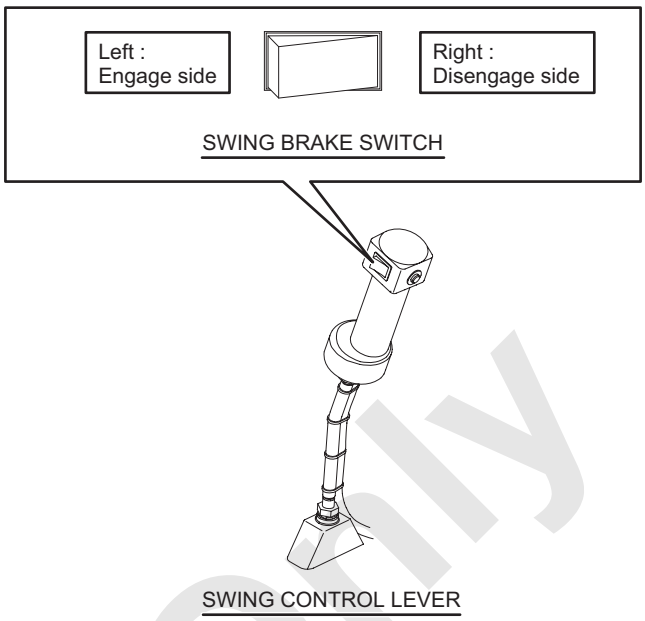

5. SWING LOCK

Confirm that the swing lock pin is inserted smoothly and can be held being pulled out. Check the lock pin and rod for deformation.

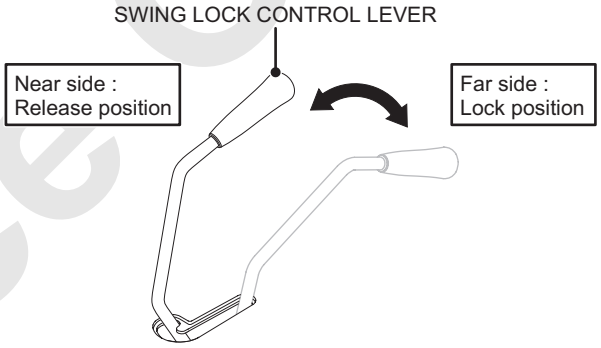

Reference Only

6. CONTROL LEVER, BRAKE PEDAL

Check the control lever and brake pedal for unusual play and for damage.

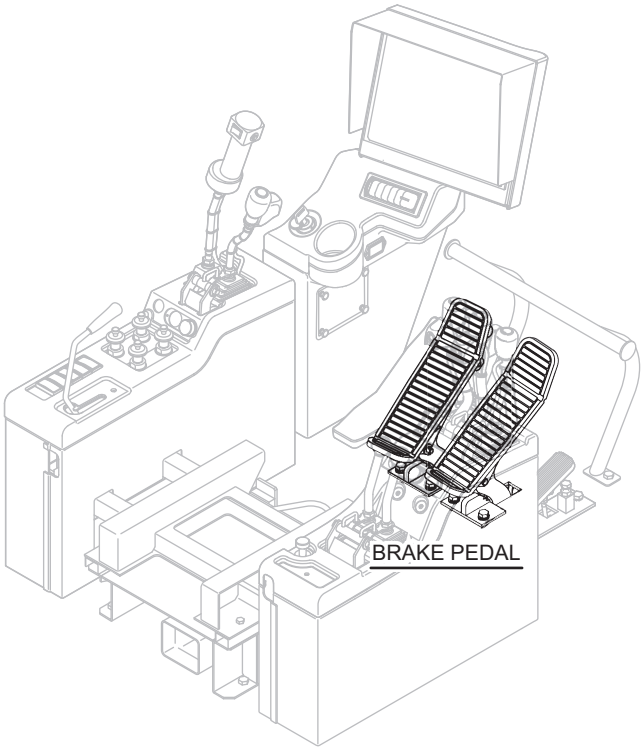

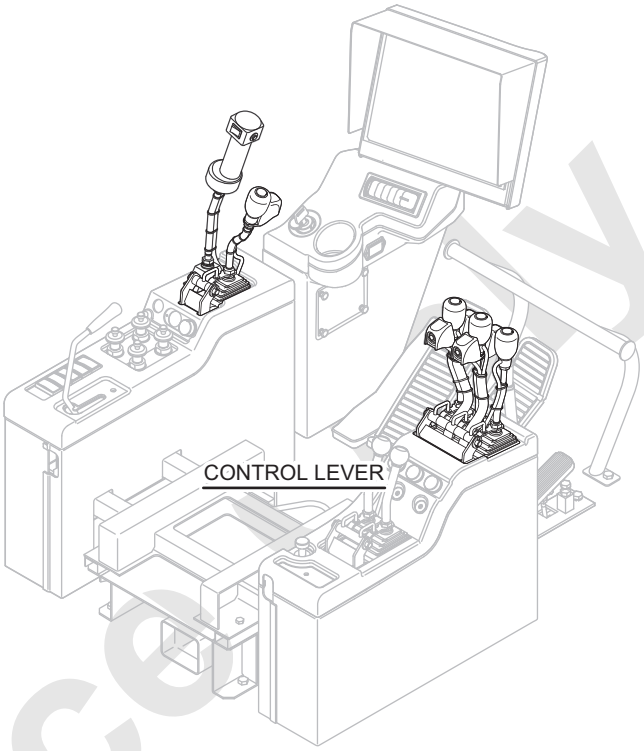

7. GANTRY

Check the gantry for damage.

⚠ CAUTION

Special procedures are required for repair.
Contact authorize Manitowoc distributor for repair.

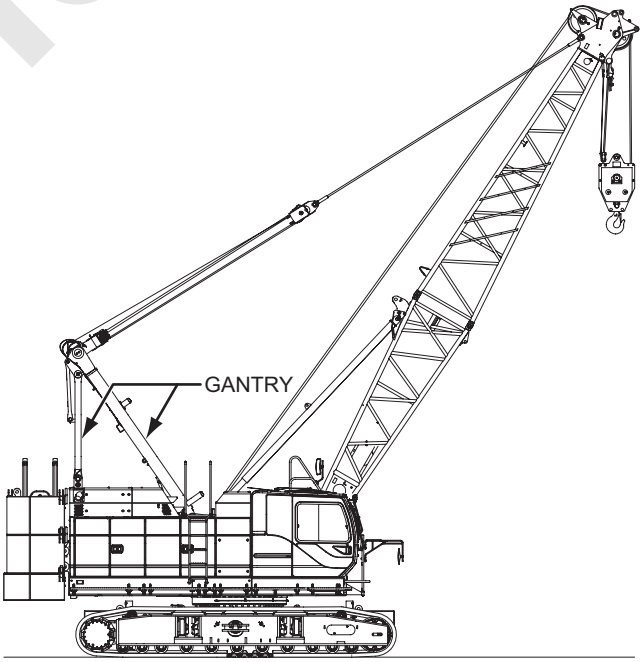

8. HORN, WORK LIGHT AND WIPER

Confirm that the horn, work light and wiper operate normally by operating the switches.

Reference only

9. AIR CLEANER

Use the sensor to determine if the air cleaner is clogged.
When the air cleaner is clogged the error code will be indicated on the monitor as below.

Clogging of air element is detected with air cleaner sensor.
When clogging occurs, warning MC1-W10 is displayed on the monitor.
Clean or replace element.

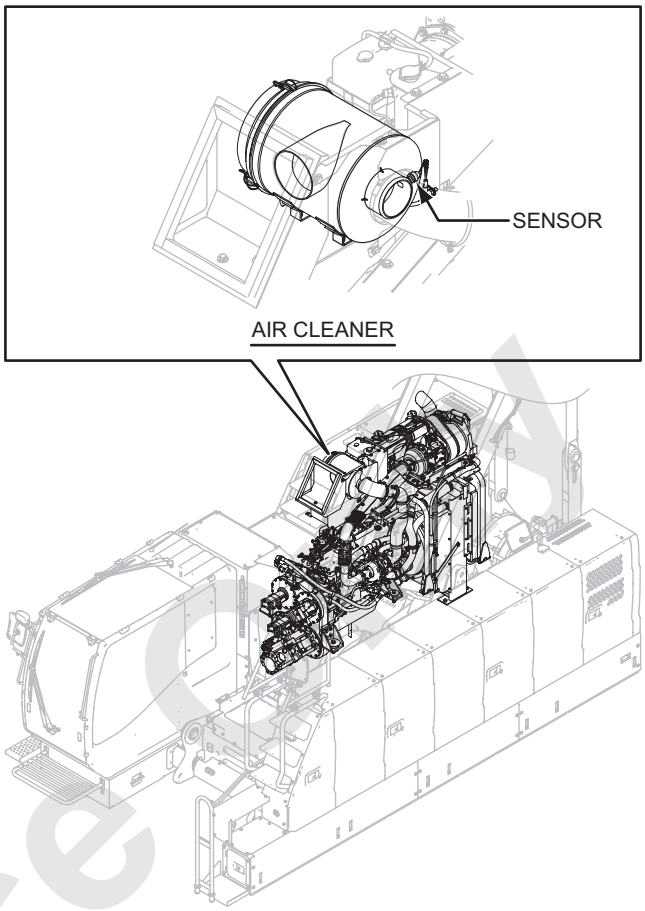

10. PIN, LINK AND COTTER PIN

Check the pin, link and cotter pin for damage and to determine if they are loose or missing.

11. BOLT AND NUT

Check the bolt and nut to determine if they are loose or missing.

12. HOOK OVERHOIST PREVENTIVE DEVICE

Confirm that the hook overhoist preventive device operates normally.
(Refer to the article “3. LOAD SAFETY DEVICE”)

13. BOOM OVERHOIST PREVENTIVE DEVICE

Confirm that the boom overhoist limit switch operates normally.
(Refer to the article “3. LOAD SAFETY DEVICE”)

14. LOAD SAFETY DEVICE, MONITOR

Confirm that operation is automatically stopped.
(Refer to the article “3. LOAD SAFETY DEVICE”)

Reference Only

15. DRUM LOCK

Confirm that the drum lock functions normally. Pull up the drum lock knob to Lock position and confirm that the pawl is engaged.

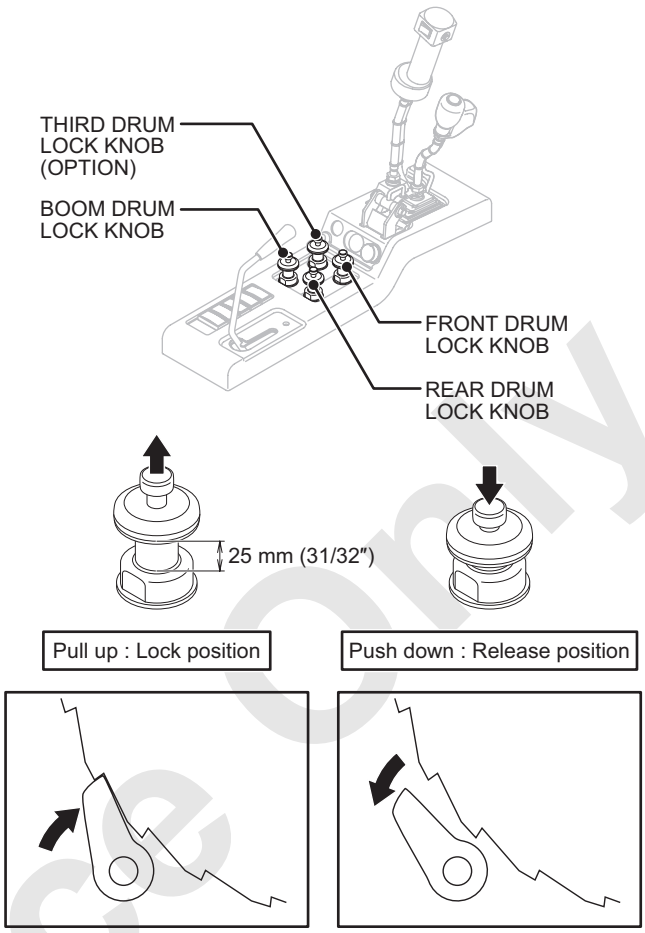

16. WINDOW GLASS, STEP, HANDLE AND GUARD

Always clean the window glass, step, handle and guard, etc.
Immediately remove any grease and oil.

Reference Only

17. DRUM BRAKE DISK (FRONT, REAR, THIRD [OPTION])

Check the wear of the brake disk with the indicator. If the “FREE FALL” mode is selected, the indicator is protruded by approx. 21 mm (13/16 in.).
Stop the engine and press the indicator.
If the indicator protrudes from the end face by approx. 8 mm (5/16 in.), the brake disk is normal.
If the protrude length of the indicator is 5 mm (3/16 in.) or shorter (indicator recess disappears), hoisting may become difficult.
In such case, replace the brake disk by contacting with authorized Manitowoc distributor.

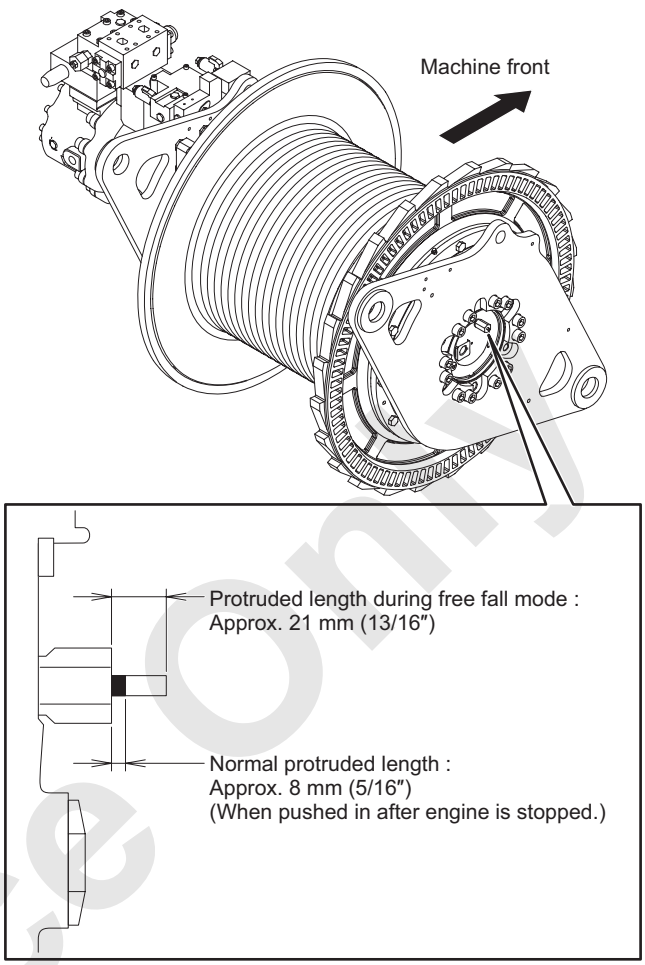

DANGER

Be sure to lower the hook block onto the ground to prevent it from dropping abruptly.
Failure to observe this precaution may result in a serious accident.

Reference Only

WEEKLY OR EVERY 50 HOURS

18. FUEL FILTER

(1) Check accumulated water level
If the float ring in the fuel filter is located bottom of the water cup.
Water dose not enter to the fuel system.
When the float ring has risen to the red line, drain the water as follows.

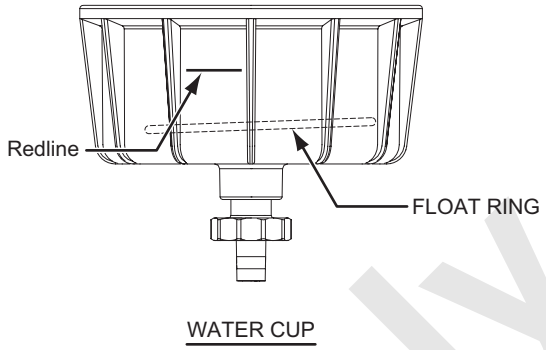

(2) Drain water from fuel filter

(A) Place a container under the drain pipe to receive drained water.
(B) Loosen drain valve and air bleeding bolt.
(C) Discharge water from at the bottom of water cup of fuel filter.
(D) Close the drain valve.

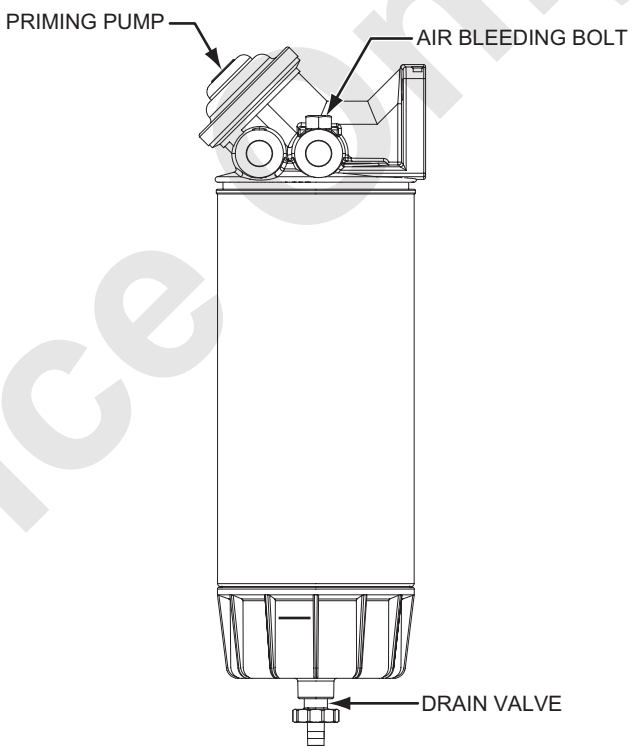

WARNING

The drained water contains the fuel.
Dispose them by following the rule specified by regional authority office.

CAUTION

As air enters into the fuel system during the work, air bleeding must be performed after completion of the work.

CAUTION

Take care that no brake fluid or parts containing organic solvents (cleaner, paint, etc.) become attached to the cup.
Since these substances can cause cracks.

Reference Only

(3) Air bleeding of the fuel system

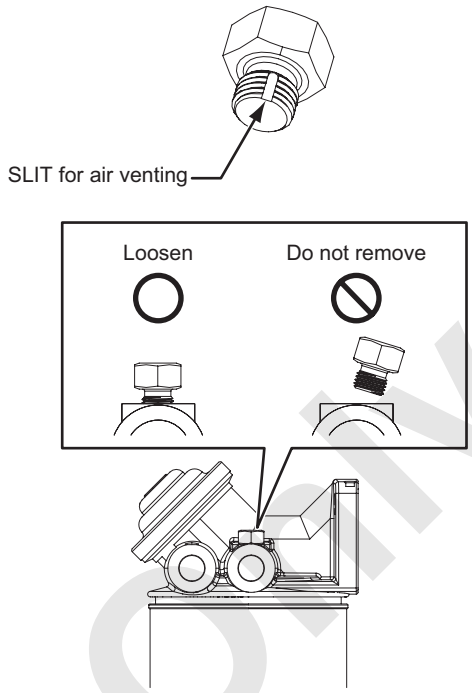

Note

Take care that no dirt or water gets into the system during the work.

(A) Operate the priming pump and bleed the air from the system.

Note

Make sure that the fuel filter air bleeding bolt has been loosened.

Note

The air bleeding bolt has a slit (groove) as shown in the figure.
As air bleed out even when the bolt is not removed completely, perform priming work with the bolt loosened to an intermediate position in order to prevent the entry of foreign matters to the fuel system.

(B) Tighten the fuel filter air bleeding bolt.
Tightening torque : 1.69 to 2.26 N·m (1.25 to 1.67 ft·lbs)

⚠ CAUTION

After work, wipe off the leaked fuel and start the engine and make sure that there is no more fuel leak. Failure to observe these precautions may result in a serious injury or loss of properties.

Reference Only

MONTHLY OR EVERY 100 HOURS

19. FAN BELT

Check the fan belt for proper tension.

WARNING

Turn the engine off before inspecting the fan belt. Failure to observe this precaution may result in a serious injury or loss of life.

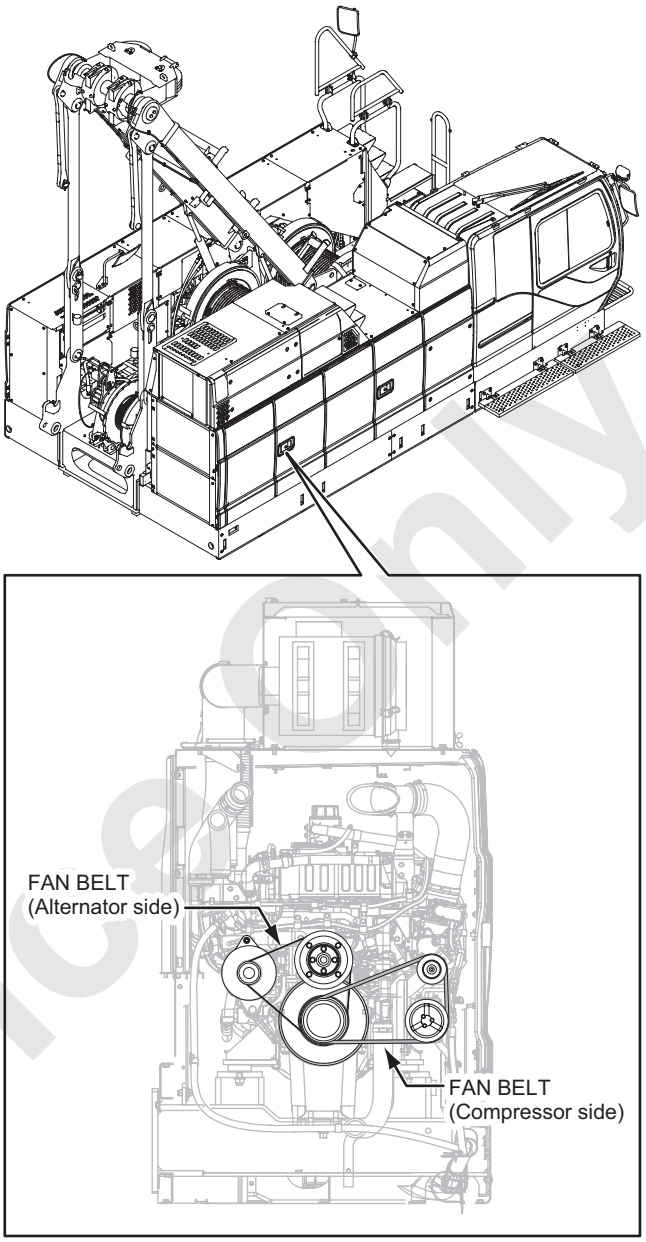

Reference Only

- **COMPRESSOR SIDE FAN BELT**
  Firmly press the middle of the fan belt with a finger.
  Deflection of 10 to 15 mm (13/32 to 19/32 in.) is normal.

- **ALTERNATOR SIDE FAN BELT**
  The alternator side belt needs to be tension-adjusted more precisely than the compressor side belt.
  Rough target of deflection is 3 to 5 mm (1/8 to 3/16 in.) but use of the ultrasonic tension meter is recommended for checking.

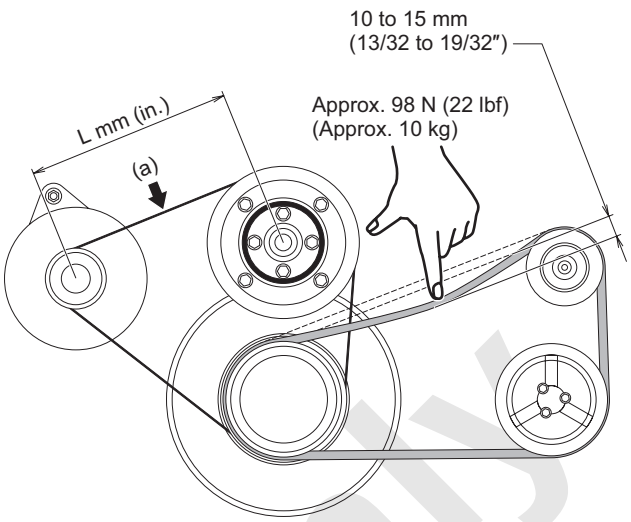

⚠ CAUTION

Inadequate tension may cause not only belt to squeal but also may cause short life of accessories. Adjust tension adequately.
Failure to observe this precaution may lead to damage parts.

Reference Only

- **Checking method of tension**

(1) Check “L” dimension.
(2) Turn the ultrasonic tension meter ON and input the unit weight. (0.015 kg·m / 0.109 ft·lbs)
(3) Input the number of belt crest.
(4) Input the span length. (L mm / L inch)
(5) Put the microphone of the ultrasonic tension meter near the measuring area (a).
With using a bar (extension bar) hit the (a) area of the belt with a specified force.
The ultrasonic tension meter reads the belt frequency and indicates it.
(6) Repeat the above actions (5) for about five times and confirm that the average value is within the specified value range.
Specified tension value :
1,324 to 1,422 N (298 to 320 lbf)
If not within the specified value, adjust the alternator belt tension.

⚠ CAUTION

Replace the belt with a new one if the belt squeals even after the belt is adjusted properly and/or crack or damage found on the belt.
If the belt is over-used, belt may break and may cause damage to the other parts.
Failure to observe this precaution may lead to damage parts.

Reference Only

20. RADIATOR AND OIL COOLER

Clean the radiator core.
Check the radiator and oil cooler for abnormalities such as water leak, oil leak or deformation.
Radiator core clogging may cause engine overheat.
Take care not to damage the core while cleaning the radiator core.

21. ENGINE MOUNTING BOLT AND RUBBER MOUNT

Check the engine mounting bolt for looseness, and the rubber mount for damage.

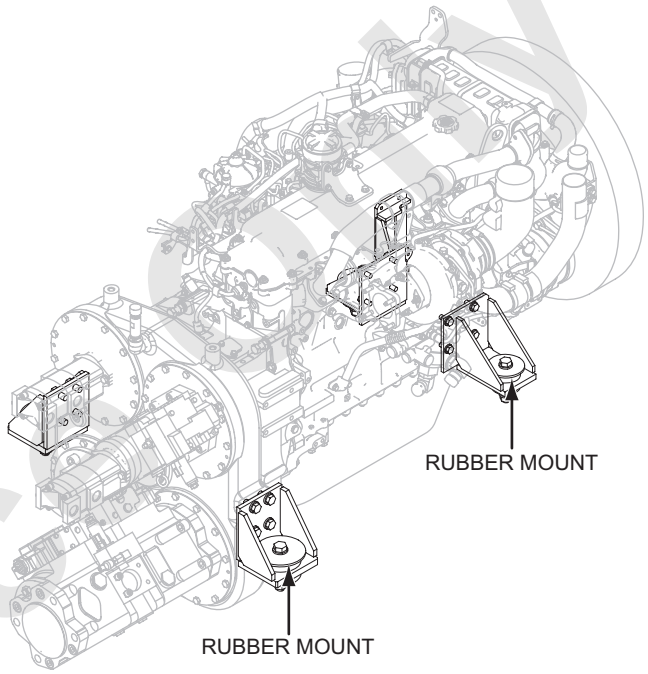

22. POWER DIVIDER

Check the power divider for oil leak and unusual noise.

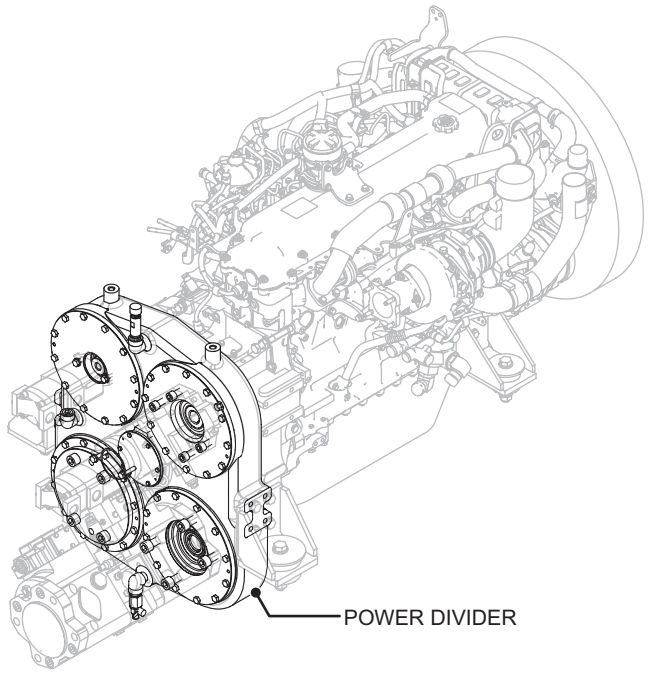

Reference only

23. HYDRAULIC MOTOR AND REDUCTION UNIT

- Swing motor and reduction unit.
- Front, rear, third (option) drum motors and reduction units.
- Boom hoist drum motor and reduction unit.
  Check these for oil leak and unusual noise.

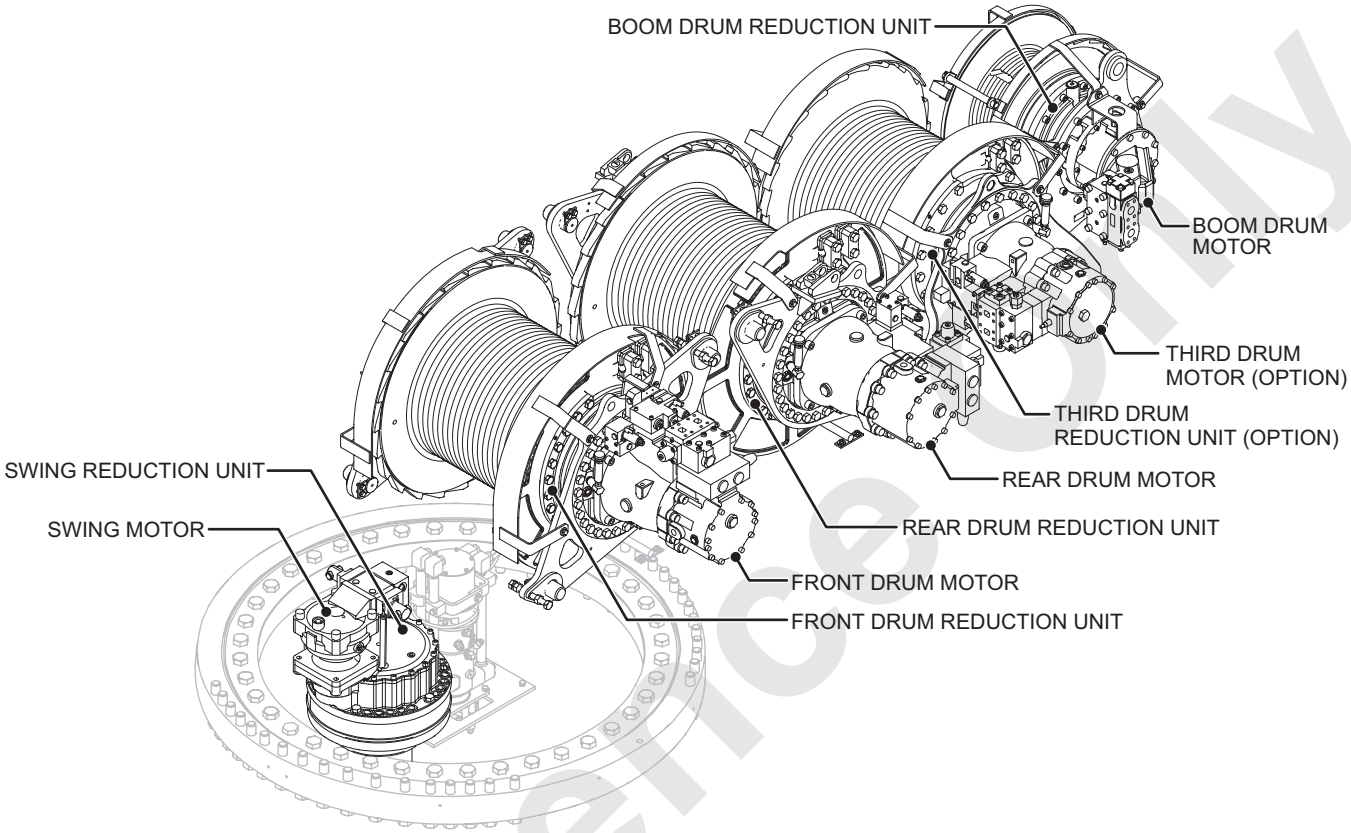

24. VALVE, ETC.

Check each valve for oil leak.

25. HYDRAULIC PUMP

Check the hydraulic pump for oil leak and for unusual noise.

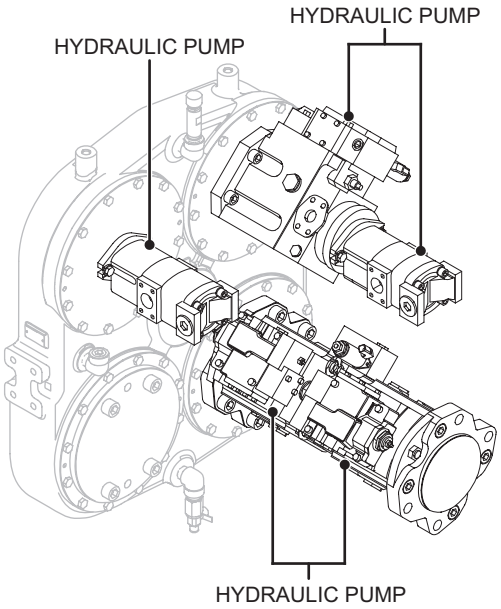

Reference Only

26. GANTRY CYLINDERS

Check the gantry cylinder for oil leak and damage.

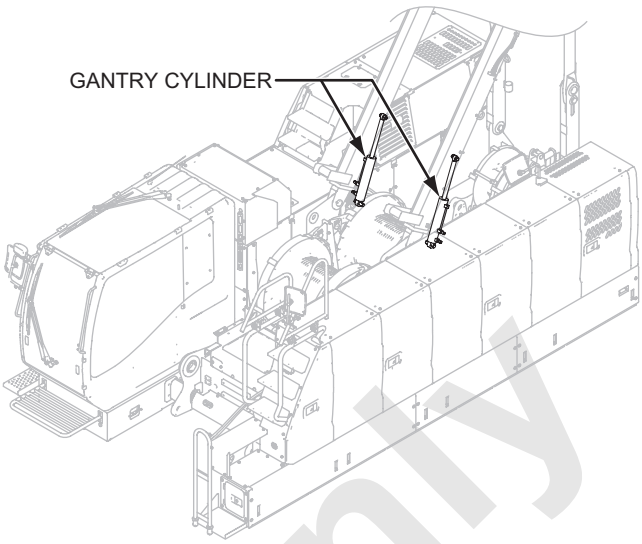

27. DRUM LOCK PAWL, DRUM RATCHET

Check the drum lock and drum ratchet for wear and damage.

FRONT, REAR, THIRD (OPTION) DRUM LOCKS

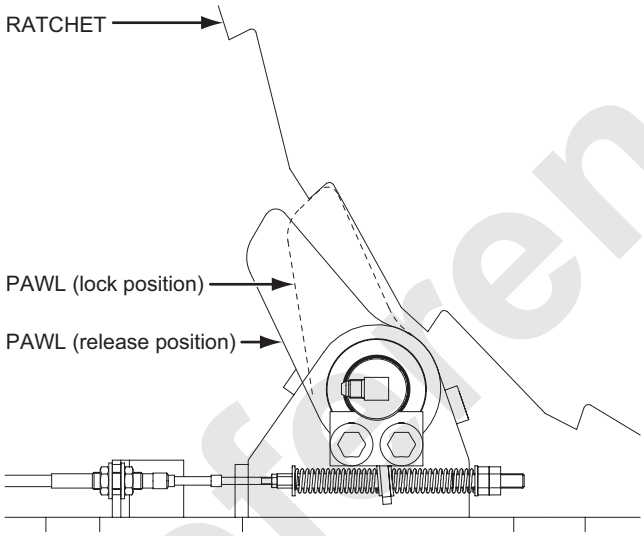

BOOM DRUM LOCK

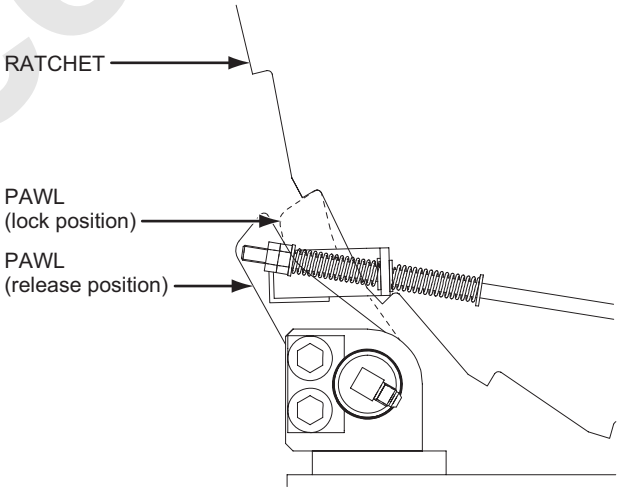

Reference Only

28. FUEL SUPPLY PUMP AND HOSE (OPTION)

Check the fuel supply pump for normal operation, and check the supply hose for damage.

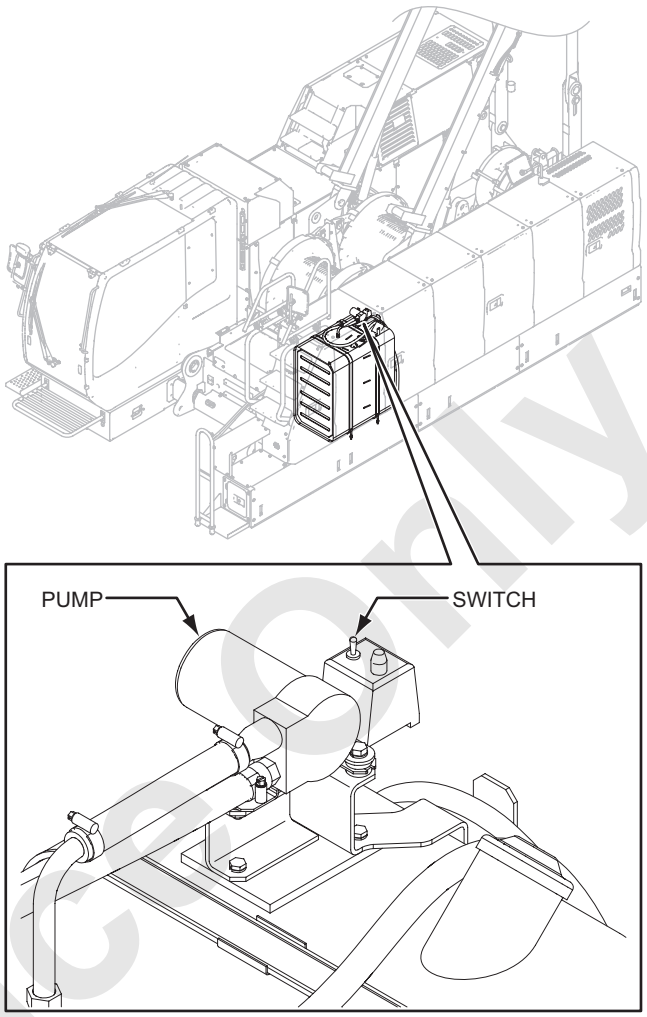

Reference Only

29. SWING ALARM

Make sure that the swing alarm and swing flasher on left and right rear of main machinery function properly when swinging for check.

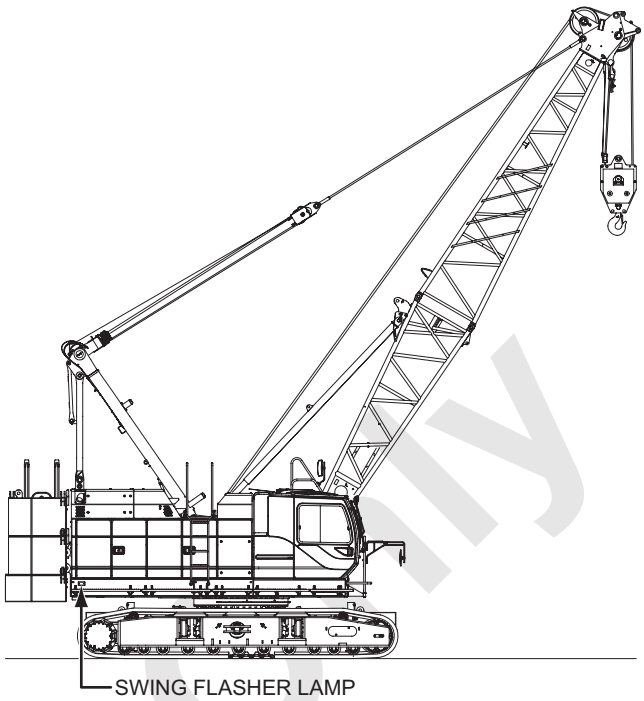

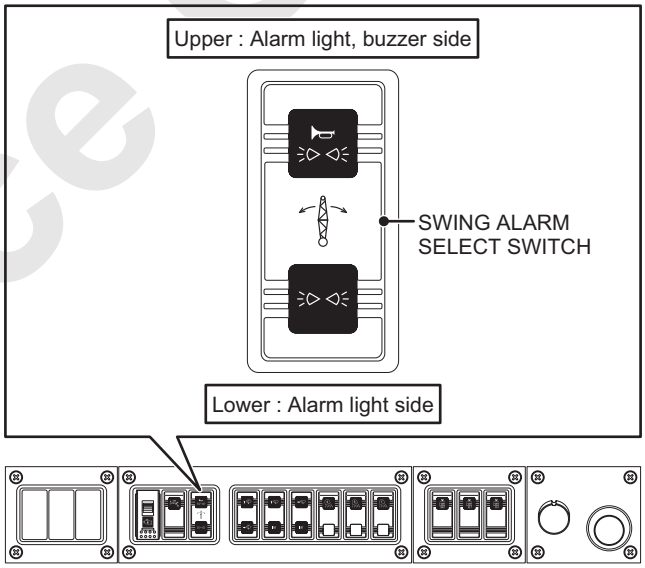

LEFT SIDE SWITCH PANEL

Reference Only

HALF YEARLY OR EVERY 500 HOURS

30. ACCUMULATOR

Check the accumulator for oil leak.

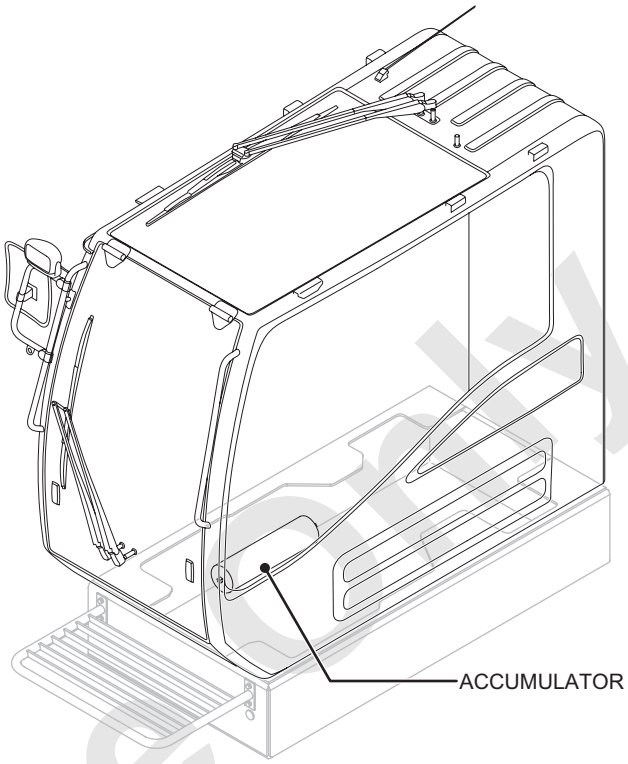

WARNING

- **Do not handle the accumulator roughly.**
- **Do not store or handle the accumulator near the heating or flammable area.**
- **Do not apply welding or machining to the accumulator.**
- **Do not remove the valve cap except when charging or discharging the gas.**
- **Do not step on or place heavy material on the accumulator installed on the machine.**
- **Check the accumulator for gas pressure every two years.**
  Ask Manitowoc authorize distributor to charge the gas.
- **Do not disassemble the accumulator and do not use it with other than the being purpose.**

The accumulator is charged with Nitrogen gas under pressure of 3.4 to 3.7 MPa (493 to 537 psi).

31. SWING FRAME, COUNTERWEIGHT (1)

Check the swing frame and counterweight (1) for crack and deformation.

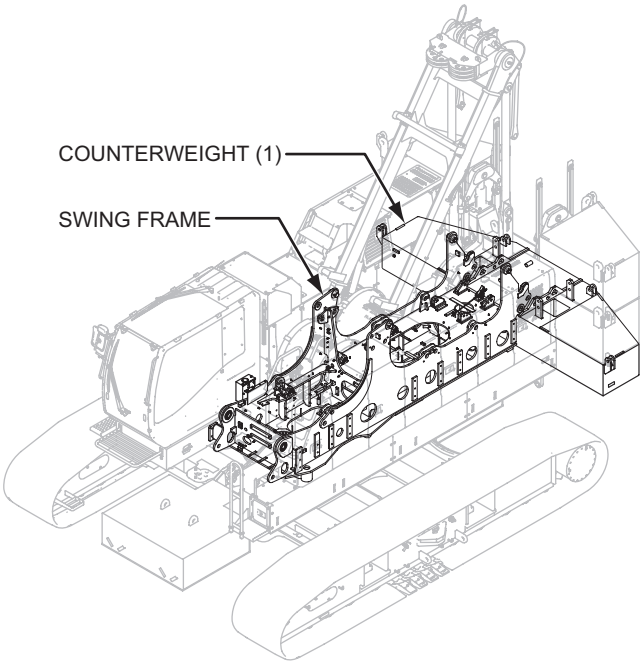

Reference Only

YEARLY OR EVERY 1,000 HOURS

32. SCR

- Inspection of DEF/AdBlue® and cooling water leakage.
  Inspect if there is DEF/AdBlue® and cooling water leakage from DEF/AdBlue® tank, DEF/AdBlue® supply module, DEF/AdBlue® dosing module and DEF/AdBlue® lines.
  If in case a leakage is existed, contact authorized Manitowoc distributor for repair.

- Inspection of DEF/AdBlue® lines.
  Inspect if the respective lines are properly connected and existing looseness of securing clips and or any defects such as cracks, damages, brake and banding etc.
  If you find such defects, contact authorized Manitowoc distributor for repair.

WARNING

Right after stop the engine, the oils and cooling water of the machine may be extremely hot and may cause scald.
Inspection, replacement, draining and replenishment are to be carry out after cool down.
Failure to observe this precaution may result in a serious injury.

Reference Only

[CHECK OF LOWER MACHINERY]

DAILY OR EVERY 8 HOURS (EVERY SHIFT)

33. HOSE, PIPING AND CONNECTOR

Check the hose, piping and connector, etc. for oil leak and damage.

34. PIN, LINK AND COTTER PIN

Check the pin, link and cotter pin for damage, and for missing.

35. BOLT AND NUT

Check the bolt and nut for looseness and for missing.

MONTHLY OR EVERY 100 HOURS

36. HYDRAULIC MOTOR AND REDUCTION UNIT

Check the hyd. motor and reduction unit for oil leak and unusual noise.

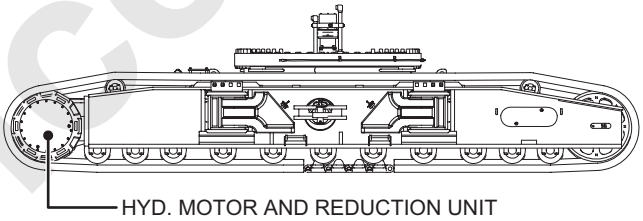

37. VALVE, ETC.

Check the valve, etc. for oil leak.

38. CRAWLER EXTEND/RETRACT CYLINDER
39. VERTICAL CYLINDER (OPTION)

Check the crawler extend/retract cylinder and vertical cylinder (option) for oil leak and damage.

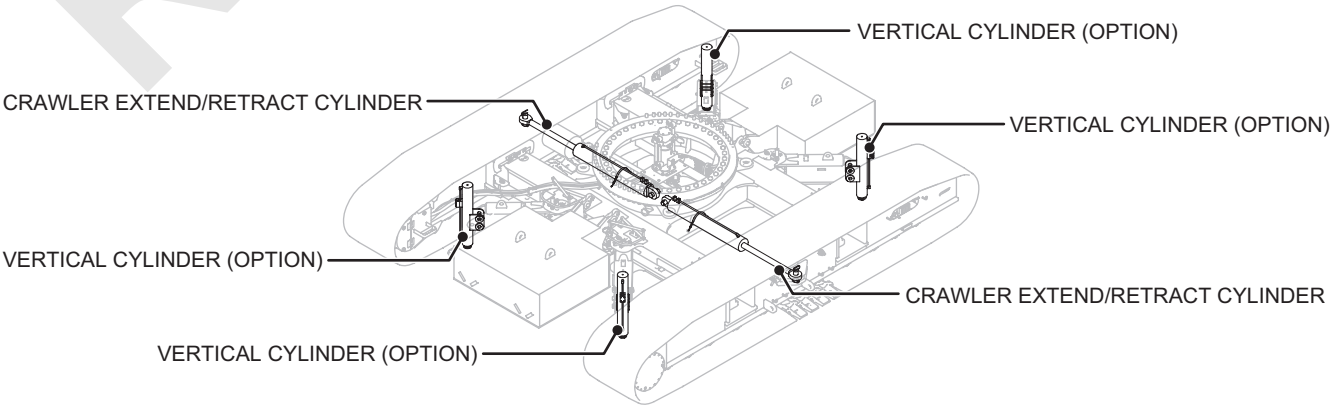

Reference Only

40. SWIVEL JOINT

Check the swivel joint for oil leak.

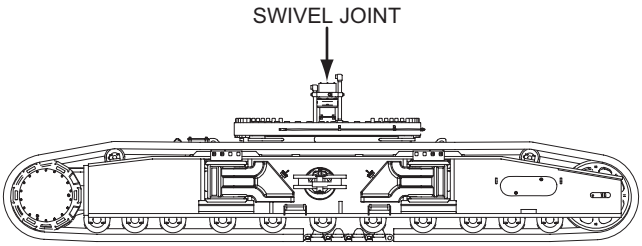

41. SWING BEARING

Check the swing bearing for unusual noise.

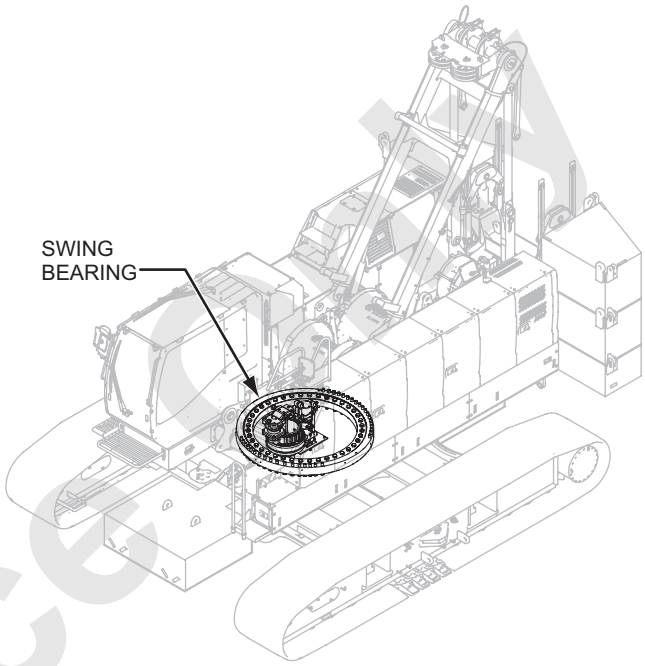

42. CRAWLER SHOE

Check the crawler shoes for looseness, damage and wear.
If the crawler tension is too high, the shoes wear quickly and a connection part of shoes could break.
On the other hand, if the crawler tension is too loose, the shoes may ride off the drive tumbler or idler wheel during traveling.

The slackening of 10 to 20 mm (13/32 to 13/16 in.) is normal condition after traveling the machine forward about the crawler length when measuring at the upper side of the crawler.

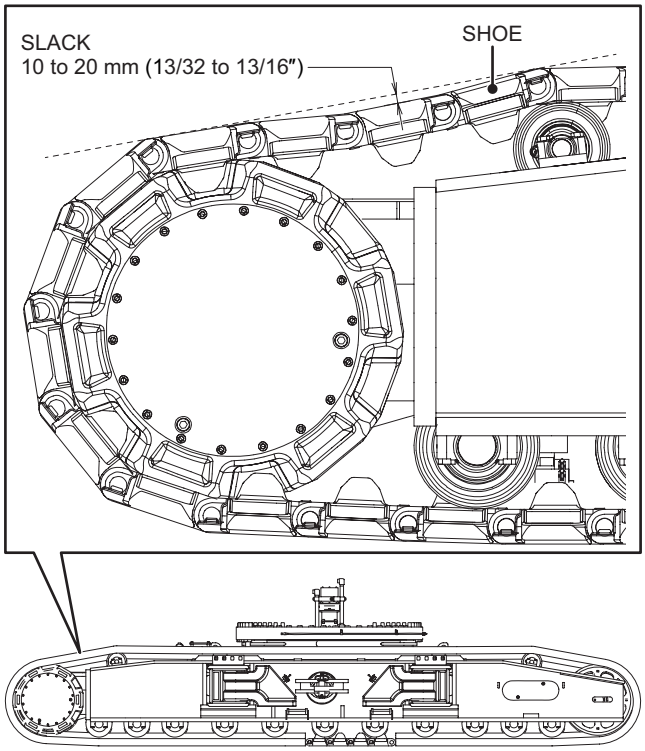

Reference Only

QUARTERLY OR EVERY 250 HOURS

43. DRIVE TUMBLER, IDLER WHEEL AND UPPER/LOWER ROLLER

Check the drive tumbler, idler wheel and upper/lower rollers for oil leak and damage.

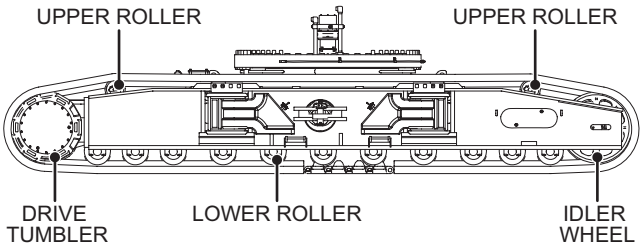

44. SWING BEARING MOUNTING BOLT

Check the swing bearing mounting bolt for looseness and missing.
Remove the upper and lower covers of the swing frame for the inner bolt checking.
If the bolt is loose, remove and check it.
And if it is damaged, replace it with new one.
If the removed bolt is not damaged, clean and coat it with LOCTITE #243 or equivalent, then securely tighten it.

TIGHTENING TORQUE

Outer bolt	2,780 N·m (2,050 ft·lbs)
Inner bolt	2,780 N·m (2,050 ft·lbs)

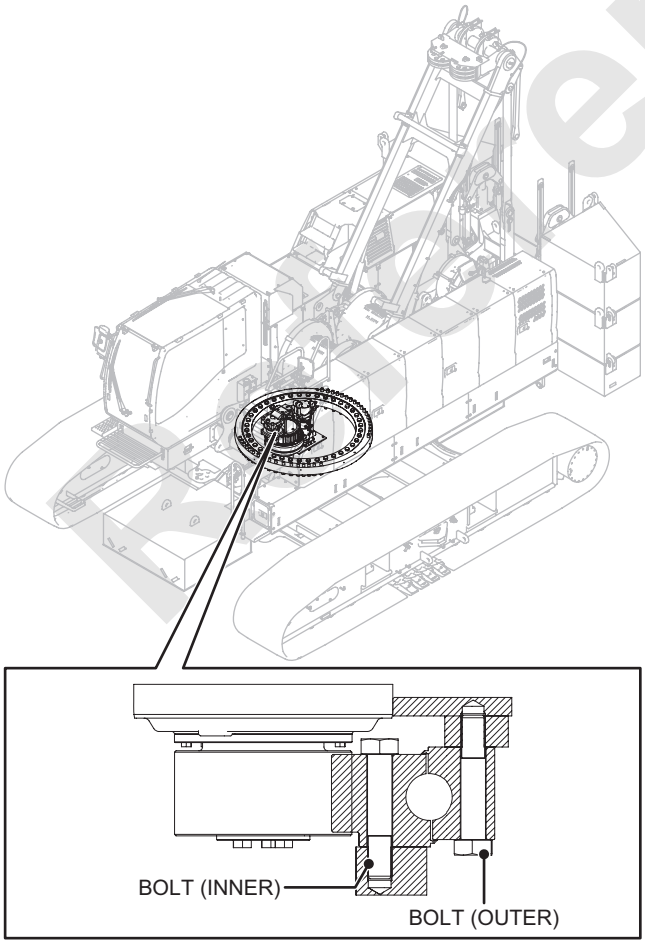

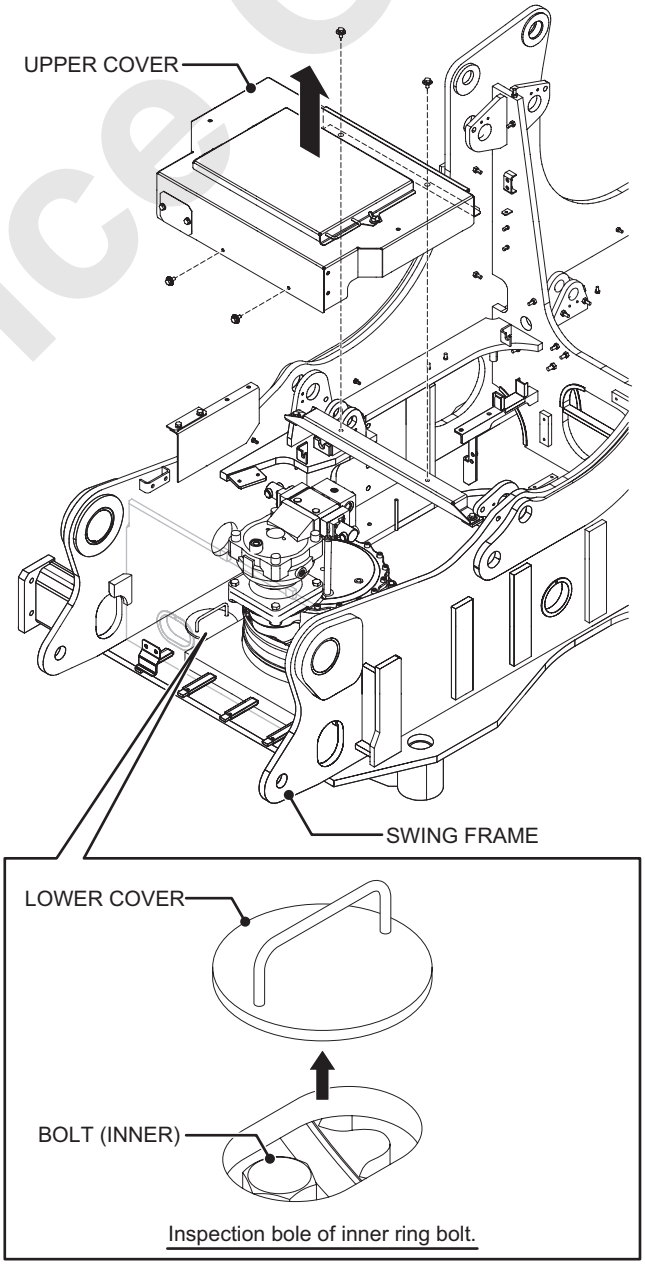

Reference Only

HALF YEARLY OR EVERY 500 HOURS

45. CARBODY, CRAWLER FRAME

Check the carbody and crawler frame for crack and damage.

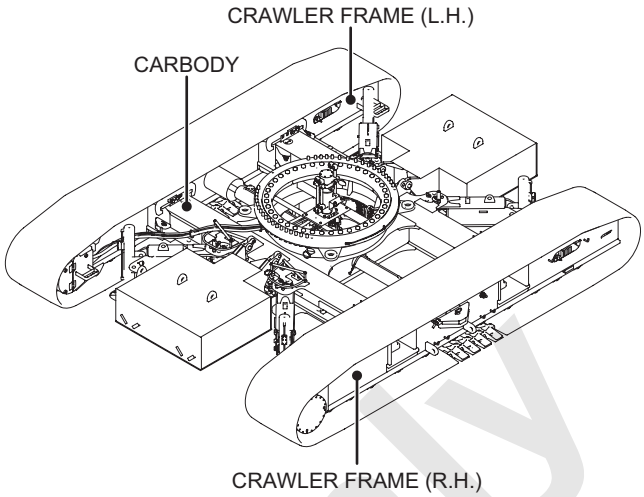

Reference Only

[CHECK OF ATTACHMENT]

DAILY OR EVERY 8 HOURS (EVERY SHIFT)

46. UPPER SPREADER AND LOWER SPREADER

Check the sheave and frame of the upper and lower spreaders for damage.

WARNING

When working at a high elevation, be sure to use a safety belt to prevent falling.
Failure to observe this precaution may result in a serious injury or loss of life.

WARNING

When handling the wire rope, use leather gloves to prevent injury on the fingers or hands.
Failure to observe this precaution may result in a serious injury.

47. HOOK AND LATCH

Check the sheave, bearing and latch of the hook block for damage, and check the bolt and nut for missing.

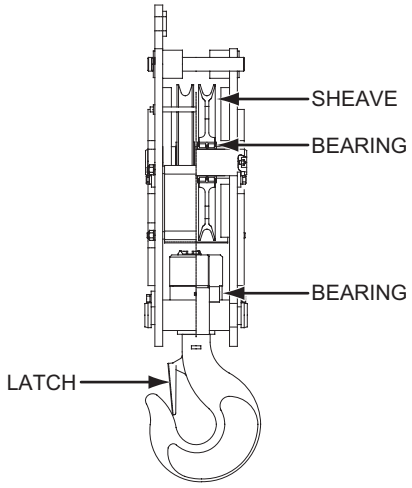

48. CABLE ROLLER AND GUIDE ROLLER

- Cable roller for boom insert
- Cable roller for boom tip
- Guide roller

Check these parts for damage, deformation and wear.

Reference Only

49. SHEAVE

- Boom point sheave
- Idler sheave
- Auxiliary sheave
- Jib point sheave
- Strut sheave
- Gantry peak sheave
- Upper / Lower spreader

Check these sheaves for damage, deformation and wear.

50. BOOM AND JIB

Check the boom and jib for damage and deformation.
Do not use the damaged and/or deformed boom and jib.
Be sure to replace the damaged boom and jib with new ones, or repair.

CAUTION

Due to the high strength steels used in boom and jibs, special repair procedures are required.
Contact authorize Manitowoc distributor for repair.

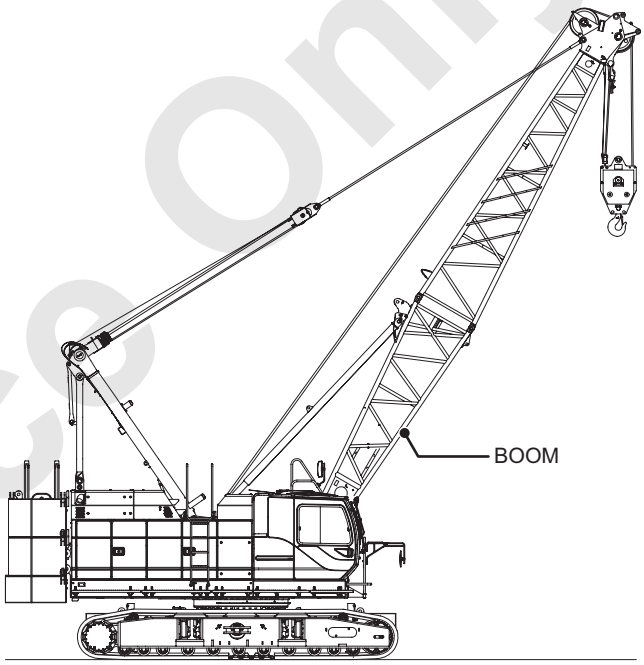

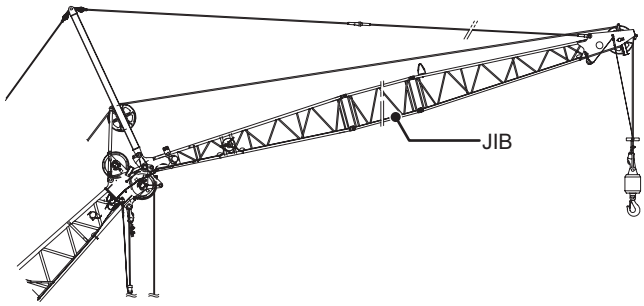

51. PIN, LINK AND COTTER PIN

Check the pin, link and cotter pin for damage and missing.

52. BOLT AND NUT

Check the bolt and nut for looseness and missing.

Reference Only

53. BACKSTOP

- Boom backstop
- Strut backstop

Check these backstops for damage and deformation.

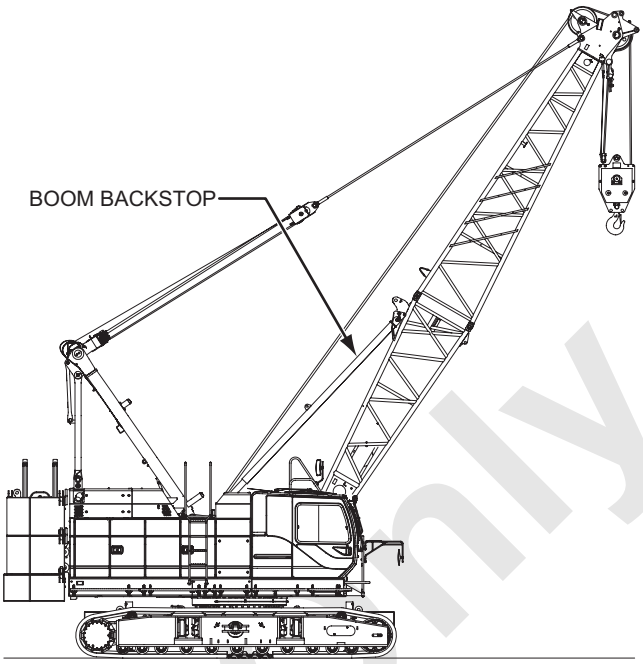

CAUTION

Special procedures are required for repair.
Contact authorize Manitowoc distributor for repair.

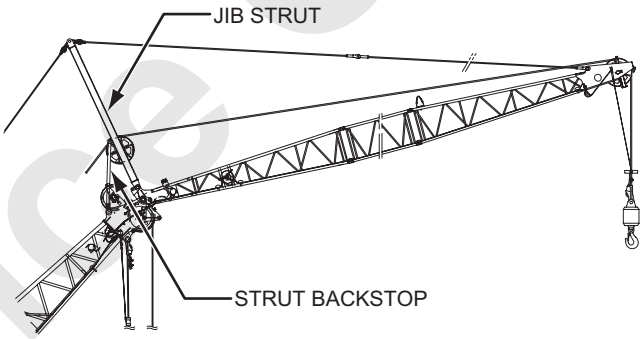

54. JIB STRUT

Check the jib strut for damage, deformation and unusual play.

CAUTION

Special procedures are required for repair.
Contact authorize Manitowoc distributor for repair.

Reference Only

55. WIRE ROPE AND GUY LINE

Check the wire rope and guy line for damage and deformation and wear.
Signs are ; Kink, Crushing, Unstranding, Birdcage, Core Failure / Protrusion, Significant corrosion, Electric arc damage.
Also inspect socket and end conditions.
Do not use the wire rope and guy line sustaining damages beyond regulations described.
Refer to the article “6. WIRE ROPE”.

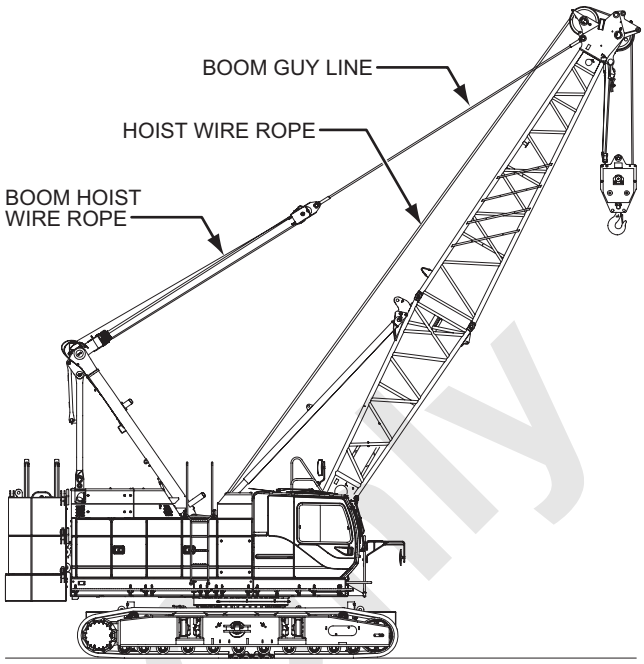

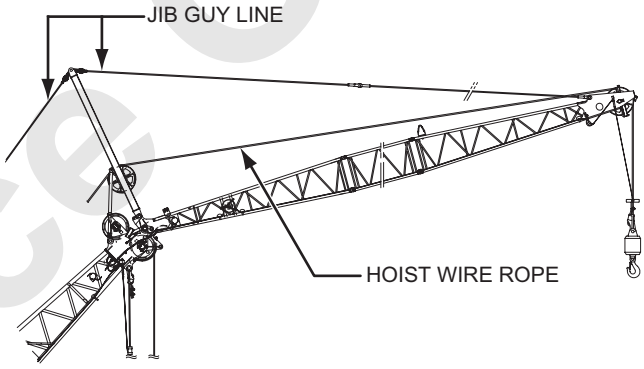

56. LOAD DETECTOR ROPE SOCKET PIN, BOLT, NUT

Check for the looseness and missing of pin, bolt, nut.

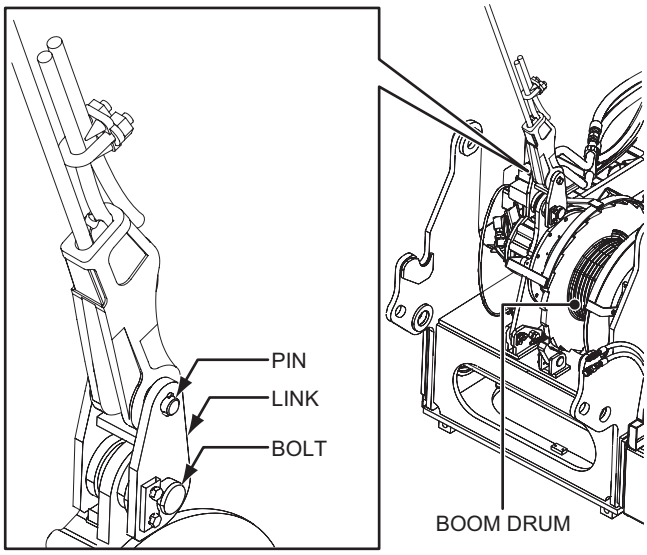

Reference Only

57. HOIST WIRE ROPE CLAMP BOLT

Ensure that the bolts securing the hoist wire rope to the drum flange are securely tightened, and the painted section of the wire rope is correctly positioned.

Tightening torque :
333 to 407 N·m (246 to 300 ft·lbs)

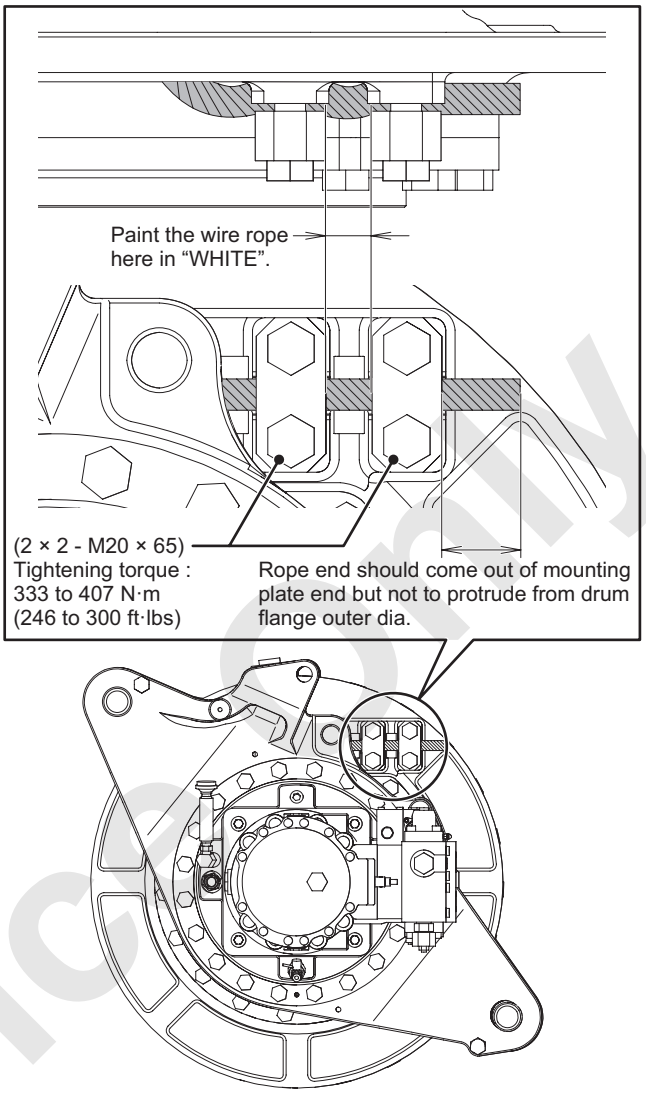

Reference Only

[HOOK AND SHACKLE MAINTENANCE STANDARD]

The operating condition of main and aux. hook can change daily with use; therefore, they must be inspected daily (at start of each shift) and observed during operation for any defects which could affect their safe operation.
Correct all defects before using the hook block or ball hook.

Daily inspection and maintenance will include the following points.

(1) Clean the hook block or the ball hook.
(2) Lubricate the sheaves (if fittings provided), the hook swivel, and any other part equipped with a grease fitting at the intervals specified in the "7.3.4 INSPECTION, GREASING (WATER SUPPLY) ON EACH POINT".
(3) Tighten the loosen tie-bolts, capscrew and set screws.
Check that all cotter pins are installed and opened.
(4) Check the sheaves for uneven wear in the grooves and on the flanges.
Check for loose or wobbly sheaves.
These conditions indicate faulty bearings or bushings.
(5) Check the fit of the wire rope in the groove of each sheave.
An oversize wire rope can crack the lip of the sheave flange causing rapid wear of the wire rope and sheave.
The groove must be larger than the wire rope, and the groove must be free of rough edges and burrs.

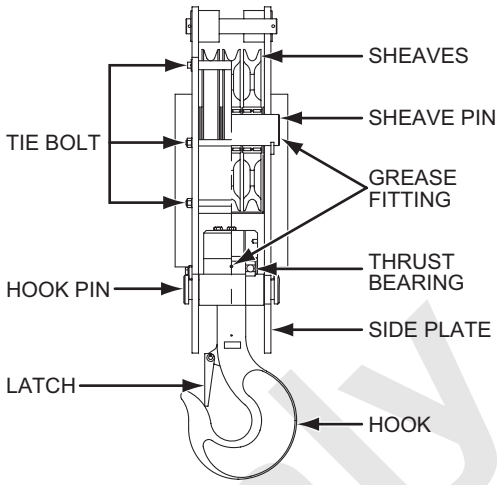

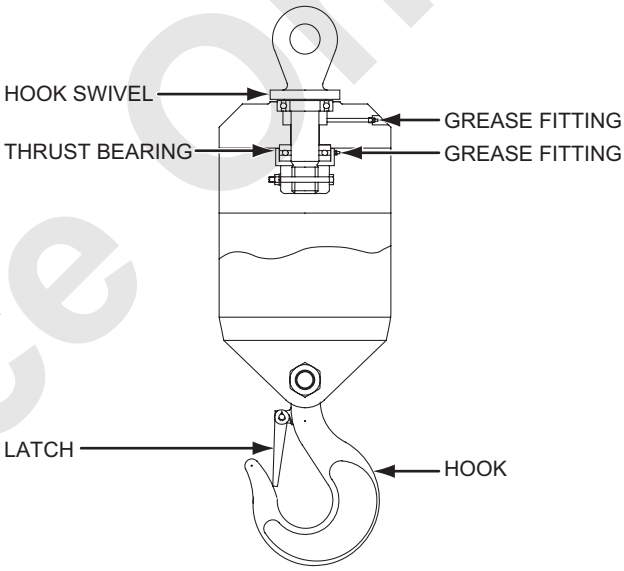

CAUTION

Rope groove dia. shall be about 10% larger than rope nominal dia.
Take extra care since, larger or smaller dia. groove may cause premature damage of the rope.
Failure to observe this precaution may lead to damage the parts.

Reference Only

(6) Check that the hook, the trunnion, and the swivel rotate freely without excessive play.
Faulty operation indicates faulty bushings or bearings or inadequate lubrication.

(7) Check the swivel of the hook for the following conditions :
Overloading : Spin the swivel by hand; if the motion is rough or has a ratchet-like effect, the swivel bearings are damaged.

(8) Check the main hook for signs of overloading: spread side plates, elongated holes, bent or elongated tie-bolts, and cracks.

(9) Check the wire rope for wear and broken wires at the point the wire rope enters the dead-end socket.
Check the socket for cracks.
Tighten the wire-rope clips at the dead end of the wire rope.

(10) Check that each hook is equipped with a hook latch and that the latch operates properly.
The latch must not be wired open or removed.

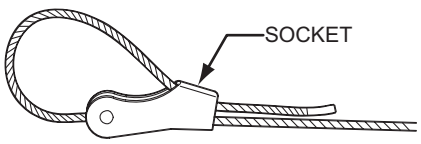

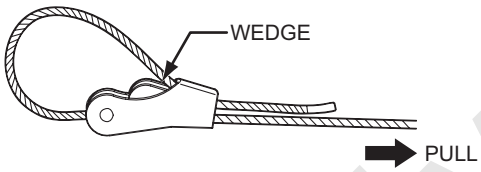

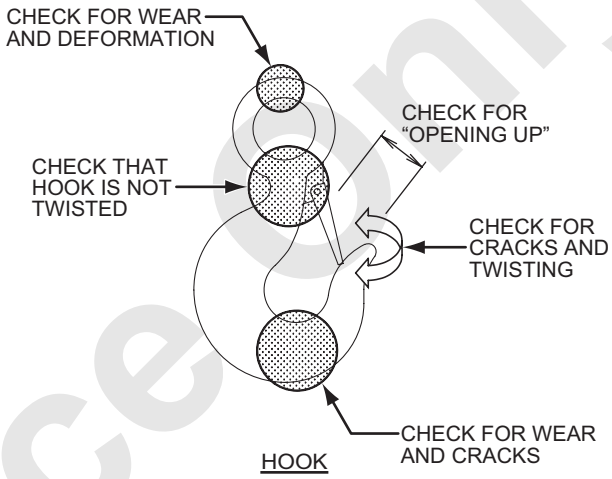

CAUTION

The latch is not intended as an anti-falling device. The latch must retain slings or other rigging in hook under slack conditions as the lifting load locate on the ground, therefore it is not withstand against the large loads.
Take extra caution that must be taken to prevent hook latch from supporting any part of load.
Failure to observe this precaution may result in a serious accident.

Reference Only

(11) Inspect shackles for damage.

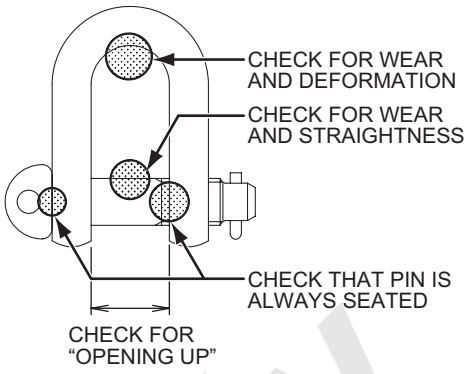

SHACKLE

Note

Inspect each hook and shackle annually at least for cracks using a dye penetrant test, MAG particle test, or by X-raying.

CAUTION

Do not attempt to repair cracks in hooks and shackles by welding.
Furthermore, do not weld on any load bearing component unless proper welding methods are used.
(Contact authorized Manitowoc distributor for required information.)
Failure to observe this precaution may result in a serious injury or loss of life.

Reference Only

7.3 INSPECTION AND OIL/GREASE AND WATER SUPPLY

To ensure proper operation of this machine, all points requiring lubrication must be serviced with the correct lubricant (oil, grease and water) at the proper interval.

STANDARD OIL (WATER) SUPPLY CAPACITY TABLE (NOT INCLUDING GREASING POINT)

Part	Points of lubrication	Symbol	Kind		Capacity : L (gal)
Upper	Engine	MO	Engine oil	SAE #10W-30 (JASO : DH-2, API : CJ-4, ACEA E-6, E-9)	28.5 (7.5)
	Radiator	LLC	Long life coolant (LLC)		34 (9.0)
	Fuel tank	–	ULTRA LOW SULFUR FUEL. Sulfur contained 50 ppm or less.		400 (105.6)
	Hydraulic oil tank	HO	Hydraulic oil	#46 #32 (OPTION)	380 (100.3)
	Power divider	GO	Gear oil	#90	10.7 (2.8)
	Front, rear drum reduction unit	GO	Gear oil	#80W-90	22/each (5.8/each)
	Boom hoist drum reduction unit	GO	Gear oil	#90	5 (1.3)
	Swing reduction unit	GO	Gear oil	#90	16.5 (4.3)
Lower	Travel reduction unit	GO	Gear oil	#90	18 (4.8)
	Idler wheel	GO	Gear oil	#140	0.25/each (0.07/each)
	Lower roller	GO	Gear oil	#140	0.13/each (0.03/each)
	Upper roller	GO	Gear oil	#140	0.06/each (0.02/each)

WARNING

- **Use ultra-low sulfur diesel fuel only (S50 : sulfur content lower than 50 ppm).**
  (For the cold region, use suitable low sulfur fuel in the area.)
  Confirm again if it is the proper type of fuel before refilling.
  Failure to observe this precaution may result of adverse effect to the environmental and white smoke.
- **If fuel other than specified one is used, adverse effect may be caused to the engine or emission control device and white smoke or failure may be resulted.**

CAUTION

In order to keep good function of the emission control devices, it is recommended to use the specified brand (recommended) engine oil.

Note

When ship the machine from factory, radiator is supplied with coolant to prevent rust and freezing in the cooling circuit combined with Long life coolant (antifreeze) of 30% or 55% (cold region) concentration by volume.

Reference Only

Manitowoc GENUINE LUBRICANT CHART

Kind	Symbol	Specification	Part No.
Hydraulic oil	HO	#46	20 L can
			200 L can
		#32 (OPTION)	20 L can
			200 L can
Extreme pressure grease	EPG	–	
High temperature grease	HPG	–	
Molybdenum disulphide grease	GL	–	
Gear oil	GO	#90	20 L can
			200 L can
		#80W-90	18 L can
			200 L can
		#140	–
Engine oil	MO	SAE #10W-30 (DH-2, CJ-4, E-6)	20 L can
			200 L can
Antifreeze	–	Long life coolant	20 L can
			200 L can
Wire rope grease	WO*	Red	18 L can
		Black	18 L can

* Select a same type of grease as applied on existing wire rope.

LUBRICATION CHART

Lubricant	Symbol	Recommended lubricant (Initial factory fill)			
Hydraulic oil	HO	Hydraulic oil with anti-wear, anti-oxidant an anti-harmful foaming			
		55°C to 5°C (131°F to 41°F)	40°C to 5°C (104°F to 41°F)	30°C to -25°C (86°F to -13°F)	15°C to -30°C (59°F to -22°F)
		ISO VG68	ISO VG46	ISO VG32	ISO VG22
Gear oil	GO	Extreme pressure gear oil #90 Grade GL-4 by API classification			
Grease	EPG	Extreme pressure Multipurpose grease NLGI No.2 Lithium base grease EP type			
	GL	NLGI No.1 Lithium base with Mo52 grease			
Engine oil	MO	Above 40°C (Above 104°F)	40°C to - 0°C (104°F to 32°F)	40°C to -30°C (104°F to -22°F)	
		SAE40	SAE30	SAE10W-30	

Reference Only

7.3.1 INSPECTION, OIL/GREASE AND WATER SUPPLY POINTS OF UPPER MACHINERY

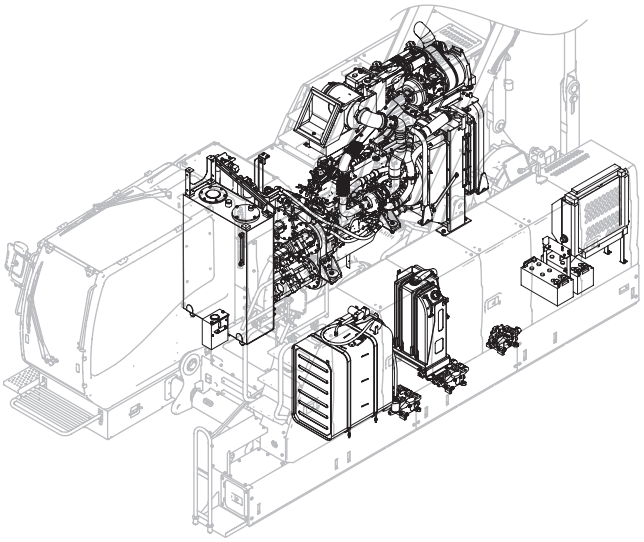

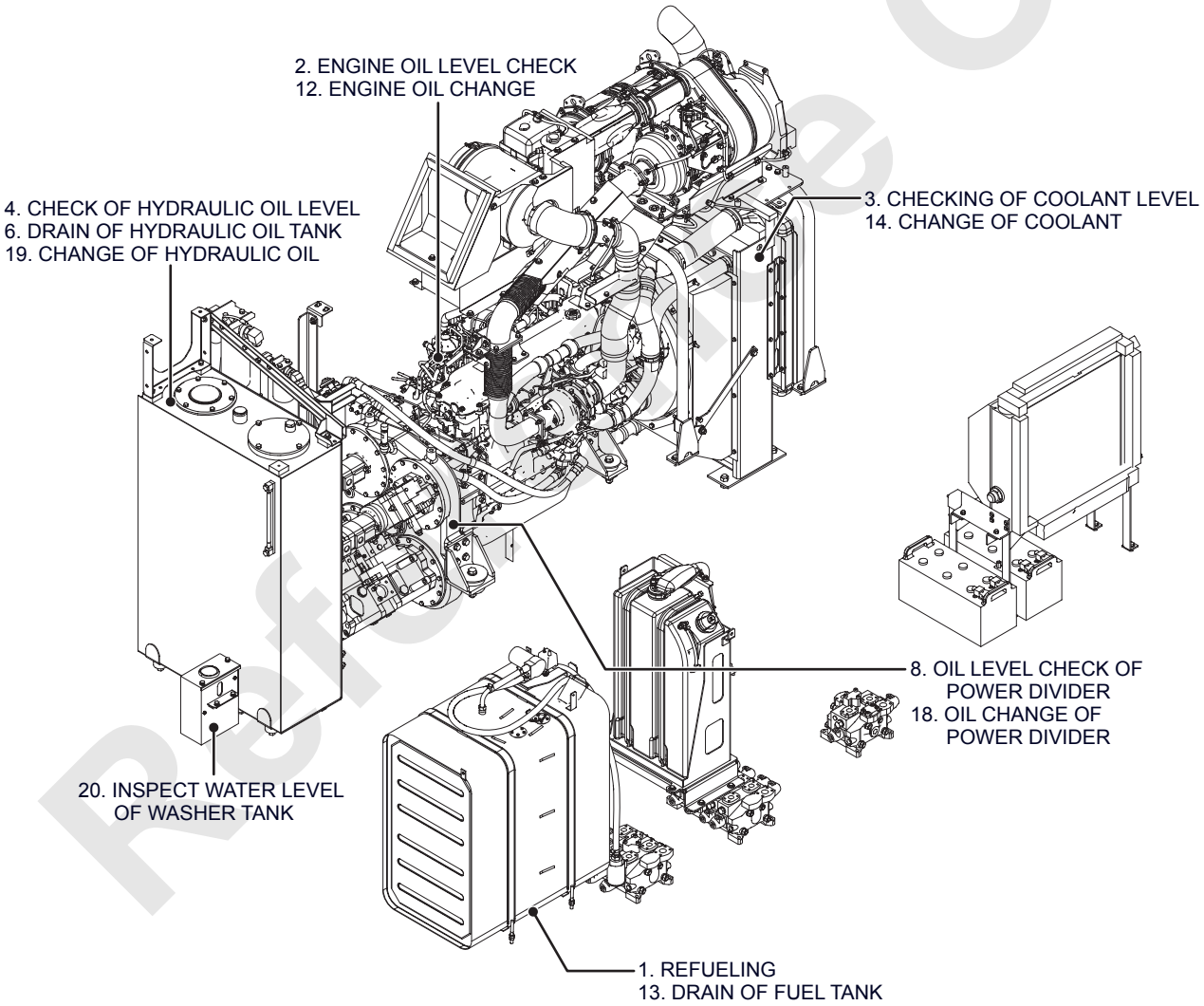

Reference Only

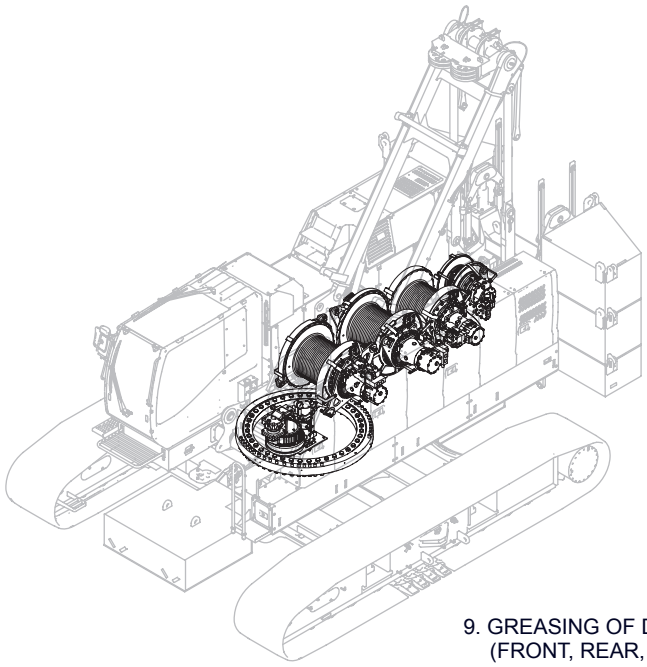

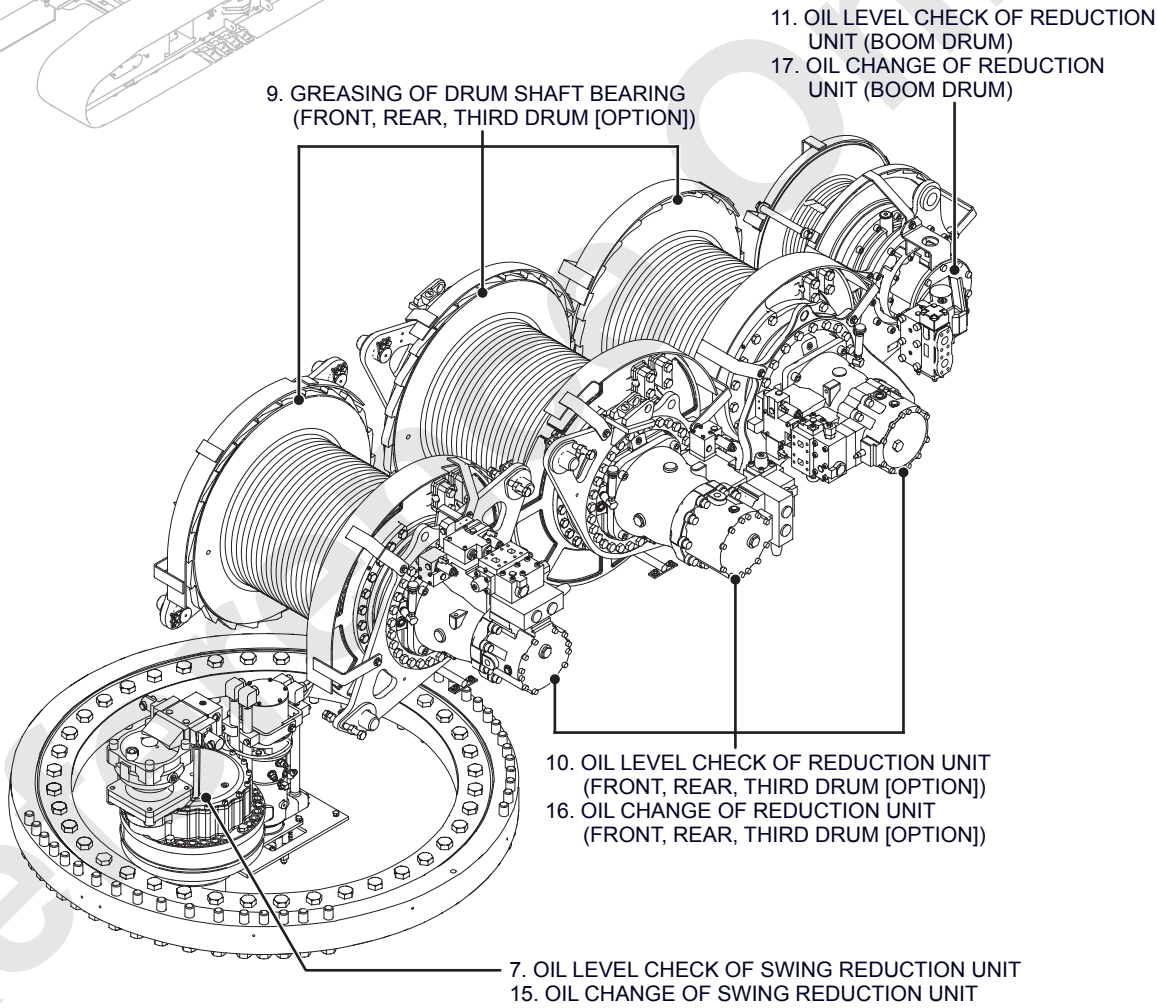

Reference Only

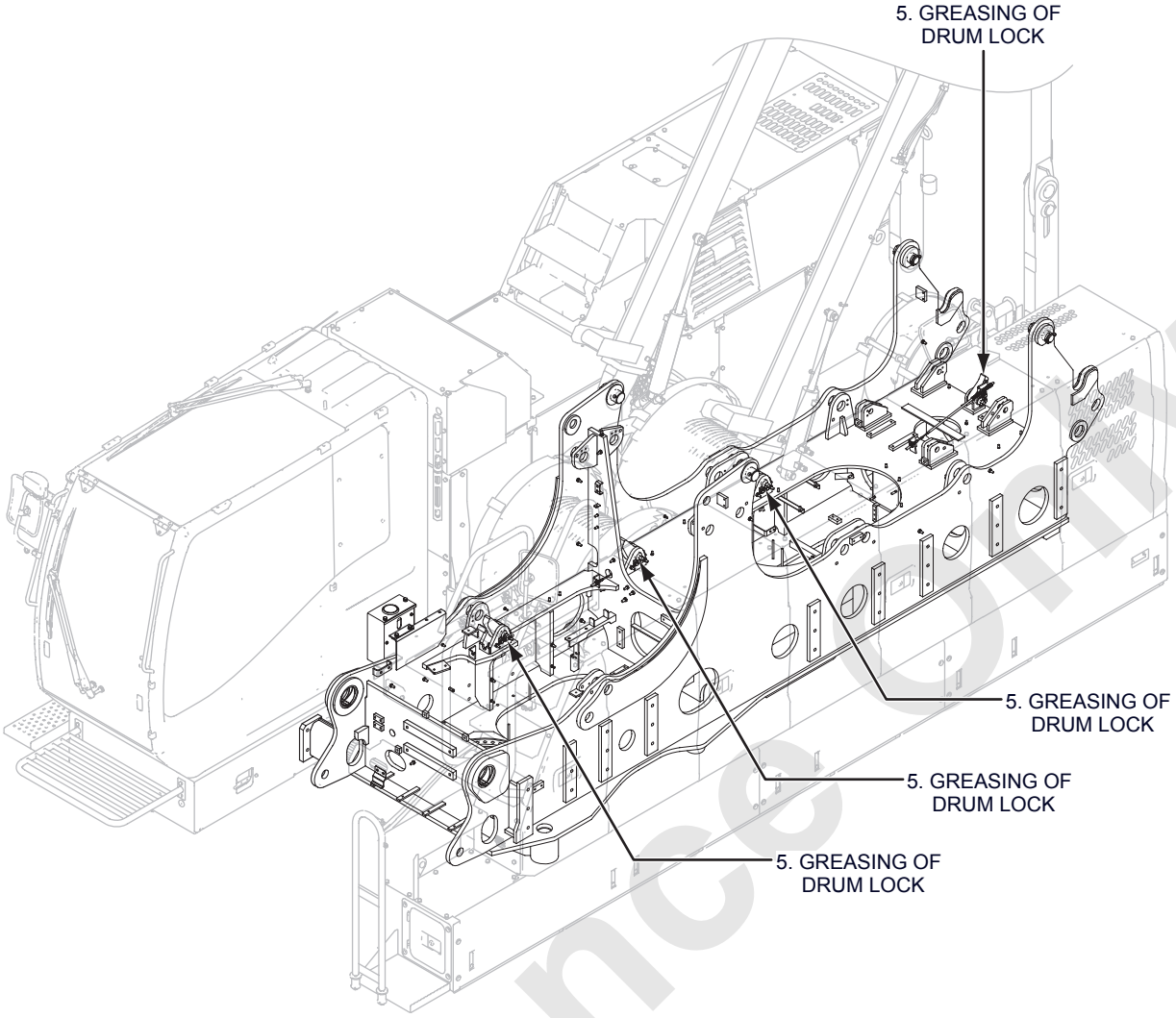

Reference Only

The number in the list below is corresponding to the figure and table on “7.3.4 INSPECTION, GREASING (WATER SUPPLY) ON EACH POINT”.

UPPER LUBRICATION TABLE (WATER SUPPLY)

Check interval	Check and lubrication place	Kind of lubricant	Amount : L (gal)	Reference page
Daily or every 8 hours (Every shift)	1. REFUELING *1	Diesel fuel	400 (105.6)	P.7-64
	2. ENGINE OIL LEVEL CHECK	MO	–	P.7-65
	3. CHECKING OF COOLANT LEVEL	LLC	–	P.7-66
	4. CHECK OF HYDRAULIC OIL LEVEL	HO	–	P.7-67
Weekly or every 50 hours	5. GREASING OF DRUM LOCK	EPG	–	P.7-68
	6. DRAIN OF HYDRAULIC OIL TANK	–	–	P.7-69
Monthly or every 100 hours	7. OIL LEVEL CHECK OF SWING REDUCTION UNIT	GO	–	P.7-70
	8. OIL LEVEL CHECK OF POWER DIVIDER	GO	–	P.7-70
Quarterly or every 250 hours	9. GREASING OF DRUM SHAFT BEARING (FRONT, REAR, THIRD DRUM [OPTION])	EPG	–	P.7-71
	10. OIL LEVEL CHECK OF REDUCTION UNIT (FRONT, REAR, THIRD DRUM [OPTION])	GO	–	P.7-71
	11. OIL LEVEL CHECK OF REDUCTION UNIT (BOOM DRUM)	GO	–	P.7-72
	12. ENGINE OIL CHANGE *2	MO	28.5 (7.5)	P.7-72
Half yearly or every 500 hours	13. DRAIN OF FUEL TANK	–	–	P.7-73
Yearly or every 1,000 hours	14. CHANGE OF COOLANT	Soft water	34 (9.0)	P.7-74
	15. OIL CHANGE OF SWING REDUCTION UNIT	GO	16.5 (4.4)	P.7-76
	16. OIL CHANGE OF REDUCTION UNIT (FRONT, REAR, THIRD DRUM [OPTION])	GO	22/1 pc (5.8/1 pc)	P.7-76
	17. OIL CHANGE OF REDUCTION UNIT (BOOM DRUM)	GO	5 (1.3)	P.7-77
	18. OIL CHANGE OF POWER DIVIDER	GO	10.7 (2.8)	P.7-77
2 yearly or every 2,000 hours	19. CHANGE OF HYDRAULIC OIL	HO	380 (100.3)	P.7-78
	20. INSPECT WATER LEVEL OF WASHER TANK	Washer liquid	–	P.7-78

*1 Perform as required.
*2 Perform when at first 30 hours from new and after overhauling too.

Clean the grease fittings before greasing.
Wipe off the excess grease.

WARNING

Stop the engine when supplying lubricants.

Reference Only

7.3.2 LOWER LUBRICATION

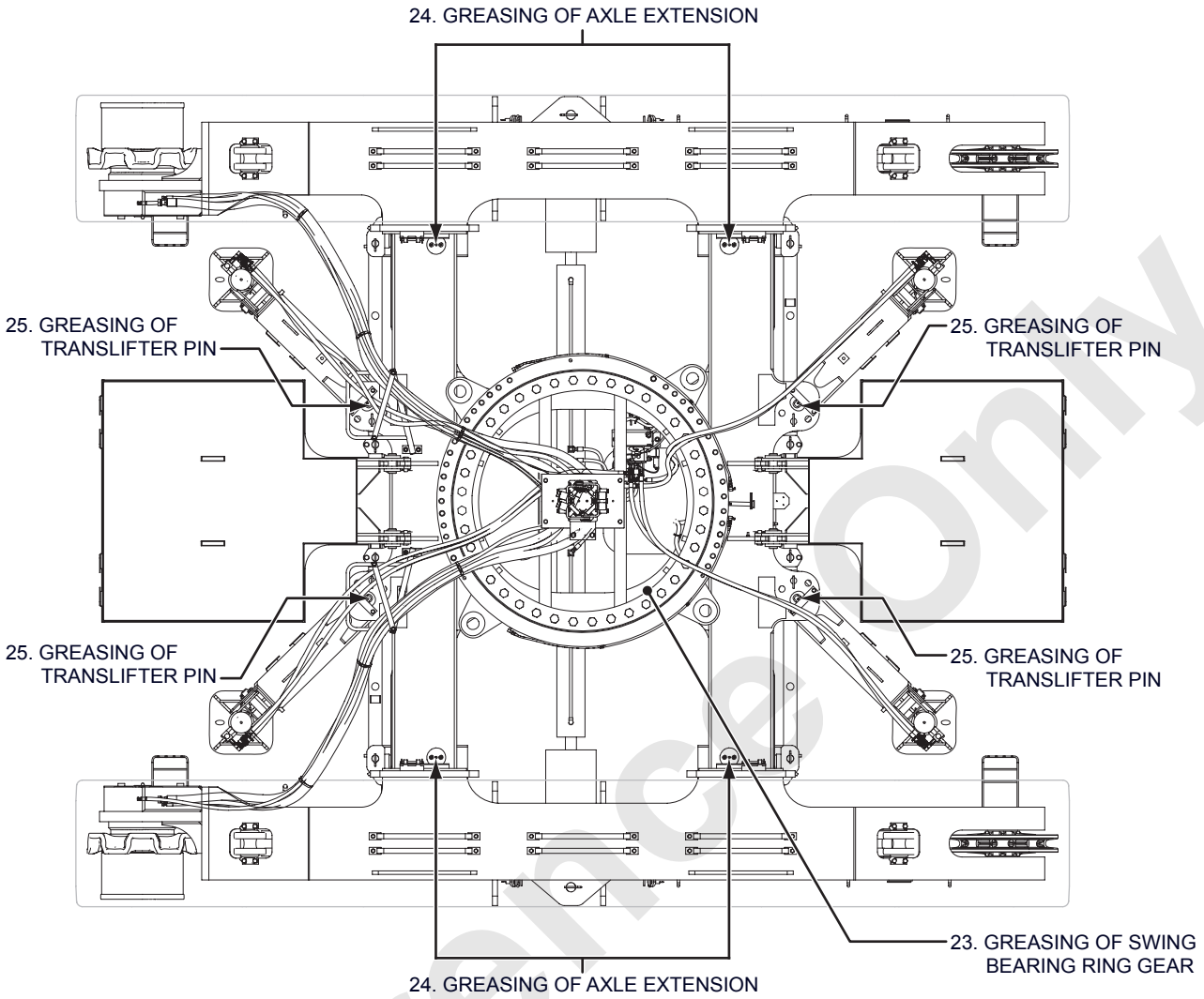

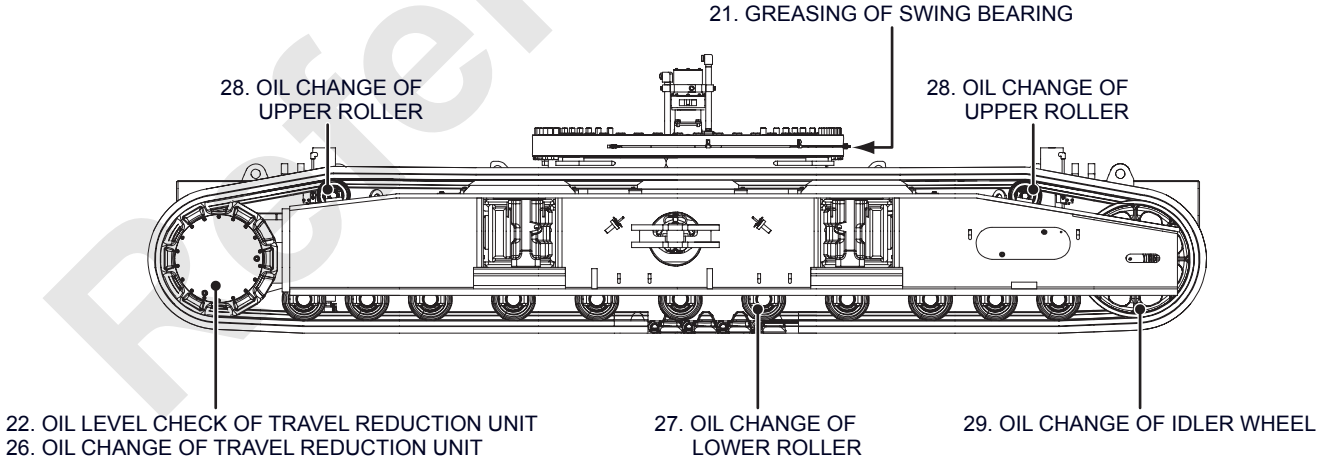

Reference Only

The number in the list below is corresponding to the figure and table on “7.3.4 INSPECTION, GREASING (WATER SUPPLY) ON EACH POINT”.

LOWER LUBRICATION TABLE (WATER SUPPLY)

Check interval	Check and lubrication place	Kind of lubricant	Amount : L (gal)	Reference page
Weekly or every 50 hours	21. GREASING OF SWING BEARING	EPG	–	P.7-79
Quarterly or every 250 hours	22. OIL LEVEL CHECK OF TRAVEL REDUCTION UNIT	GO	–	P.7-80
	23. GREASING OF SWING BEARING RING GEAR *3	GL	–	P.7-80
	24. GREASING OF AXLE EXTENSION	EPG	–	P.7-81
	25. GREASING OF TRANSLIFTER PIN	EPG	–	P.7-81
Yearly or every 1,000 hours	26. OIL CHANGE OF TRAVEL REDUCTION UNIT	GO	18/pc (4.8/pc)	P.7-81
As require	27. OIL CHANGE OF LOWER ROLLER *4	GO	0.13/pc (0.03/pc)	P.7-82
	28. OIL CHANGE OF UPPER ROLLER *4	GO	0.06/pc (0.02/pc)	P.7-82
	29. OIL CHANGE OF IDLER WHEEL *4	GO	0.25/pc (0.06/pc)	P.7-82

*3 Perform weekly or every 50 hours whichever comes first in case of the swing boom method operation such as the clamshell and/or lifting magnet operation.

*4 Since no abnormal is found, perform replacement of oil at overhauling at authorized Manitowoc distributor.

Clean the grease fittings before greasing.
Wipe off the excess grease.

WARNING

Stop the engine when supplying lubricants.

Reference Only

7.3.3 ATTACHMENT LUBRICATION

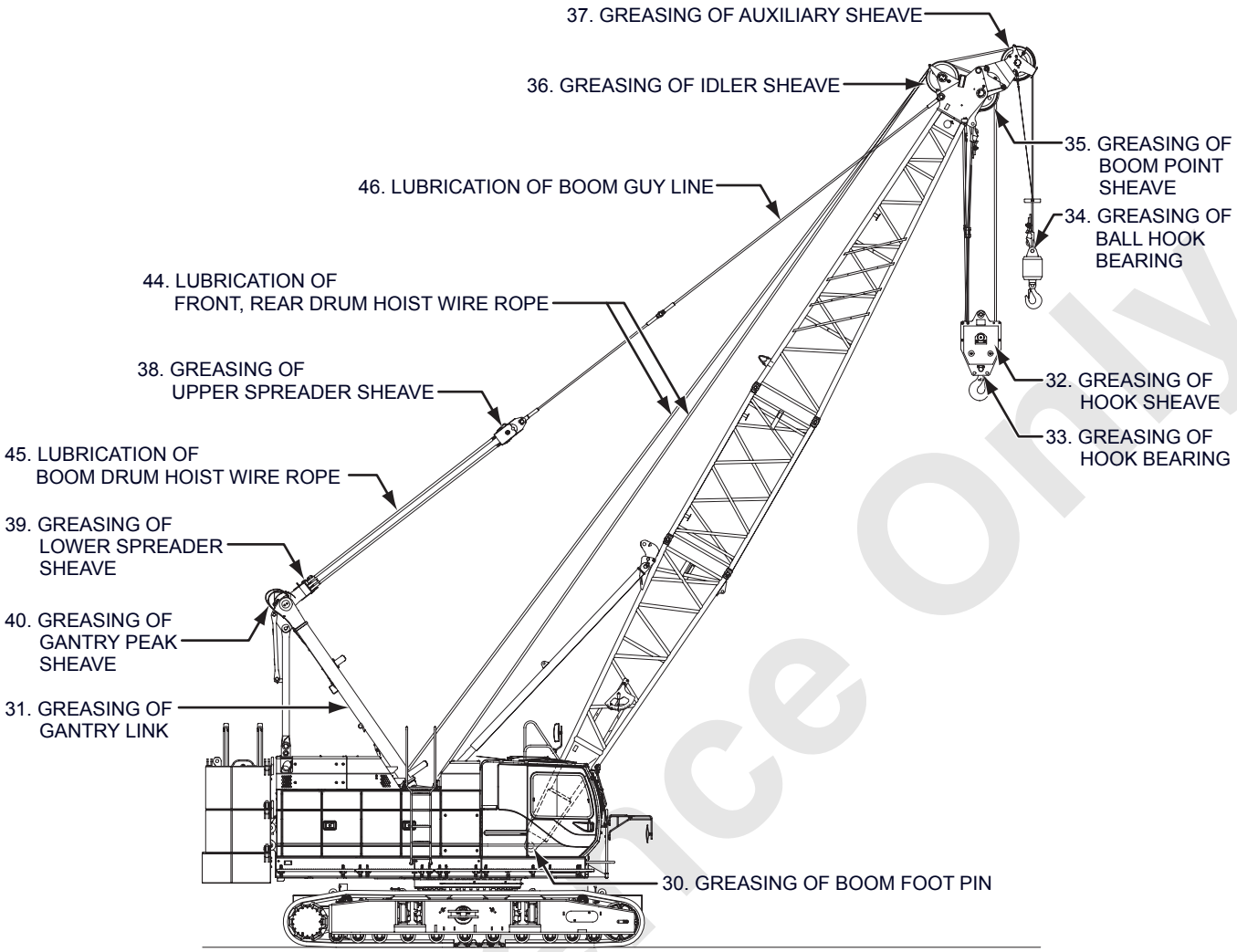

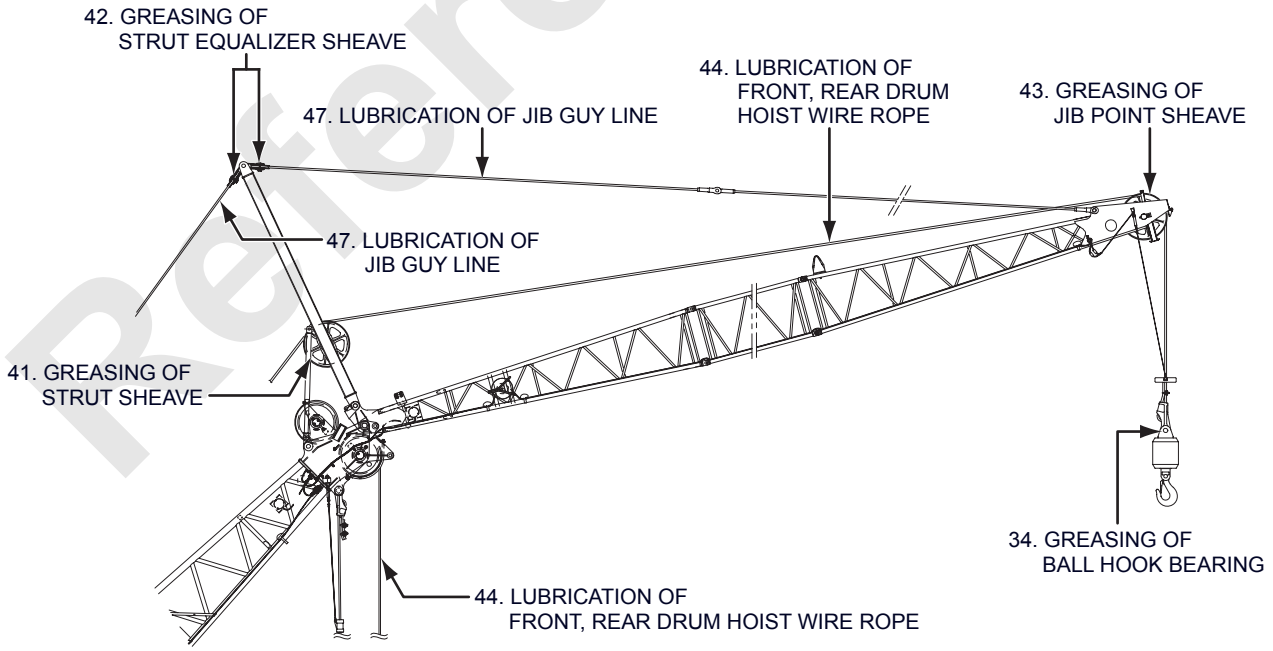

Reference Only

The number in the list below is corresponding to the figure and table on “7.3.4 INSPECTION, GREASING (WATER SUPPLY) ON EACH POINT”.

ATTACHMENT LUBRICATION TABLE

Check and lubrication interval	Check and lubrication place	Kind of lubricant	Reference page
Daily or every 8 hours (Every shift)	30. GREASING OF BOOM FOOT PIN	EPG	P.7-83
	31. GREASING OF GANTRY LINK	EPG	P.7-83
Weekly or every 50 hours	32. GREASING OF HOOK SHEAVE	EPG	P.7-84
	33. GREASING OF HOOK BEARING	EPG	P.7-84
	34. GREASING OF BALL HOOK BEARING	EPG	P.7-84
Yearly or every 1,000 hours	35. GREASING OF BOOM POINT SHEAVE *5 *6	EPG	P.7-85
	36. GREASING OF IDLER SHEAVE *5 *6	EPG	P.7-85
	37. GREASING OF AUXILIARY SHEAVE *5 *6	EPG	P.7-85
	38. GREASING OF UPPER SPREADER SHEAVE *5 *6	EPG	P.7-85
	39. GREASING OF LOWER SPREADER SHEAVE *5 *6	EPG	P.7-85
	40. GREASING OF GANTRY PEAK SHEAVE *5 *6	EPG	P.7-85
	41. GREASING OF STRUT SHEAVE *5	EPG	P.7-85
	42. GREASING OF STRUT EQUALIZER SHEAVE *5	EPG	P.7-85
	43. GREASING OF JIB POINT SHEAVE *5	EPG	P.7-85
As require	44. LUBRICATION OF FRONT, REAR DRUM HOIST WIRE ROPE *7	WO	P.7-85
	45. LUBRICATION OF BOOM DRUM HOIST WIRE ROPE *7	WO	P.7-85
	46. LUBRICATION OF BOOM GUY LINE *7	WO	P.7-85
	47. LUBRICATION OF JIB GUY LINE *7	WO	P.7-85

*5 Apply grease to the sheave by replacing a plug with a grease nipple.
In case of general crane work, grease on every 1,000 hours.

*6 Perform half yearly or every 500 hours whichever comes first in case of the swing boom method operation such as the clamshell and/or lifting magnet operation.

*7 Apply lubricant to the wire rope based on work condition.
Use brush or spray when applying lubricant to wire rope.

Clean the grease fittings before greasing.
Wipe off the excess grease.

WARNING

Stop the engine when supplying lubricants.

Reference Only

7.3.4 INSPECTION, GREASING (WATER SUPPLY) ON EACH POINT

[INSPECTION, GREASING (WATER SUPPLY) ON UPPER MACHINERY]

DAILY OR EVERY 8 HOURS (EVERY SHIFT)

1. REFUELING

After daily work is finished, fill the fuel tank as full as possible in order to minimize condensation.
The fuel pump is optional item.
If the fuel pump is not equipped, supply fuel from the filler port.

Refer to P.7-73 for fuel tank drain.

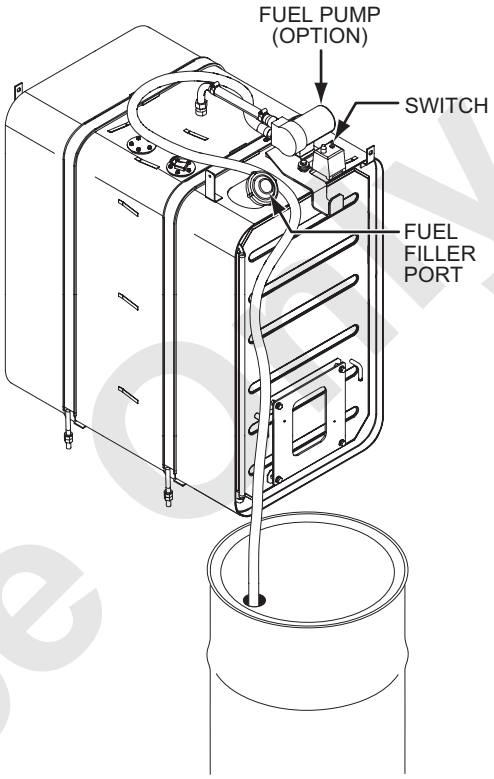

CAUTION

Never run the fuel pump with empty tank.
Failure to observe this precaution may lead to damage the parts.

WARNING

- **Use ultra-low sulfur diesel fuel only (S50 : sulfur content lower than 50 ppm).**
  (For the cold region, use suitable low sulfur fuel in the area.)
  Confirm again if it is the proper type of fuel before refilling.
  Failure to observe this precaution may result of adverse effect to the environmental and white smoke.
- **When fuel is to be refilled, ensure to stop the engine.**
  Failure to observe this precaution may result in a serious accident.
- **When fuel is to be refilled, do not overfill the fuel.**
  Failure to observe this precaution may result in a serious accident.
- **Carefully wipe off any fuel splashed on to the engine or its parts.**
  Otherwise it may cause of fire.
  Failure to observe this precaution may result in a serious accident.
- **Keep away flammable from the fuel to prevent an ignition and explosion.**
  Failure to observe this precaution may result in serious injuries, property damage or loss of life.

Reference Only

2. ENGINE OIL LEVEL CHECK

Ensure to check the engine oil level prior to work.
Wipe the level gauge clean once and then insert the level gauge.
If the level is within the range of proper oil level, it is normal.

Refer to P.7-72 for replacing engine oil.

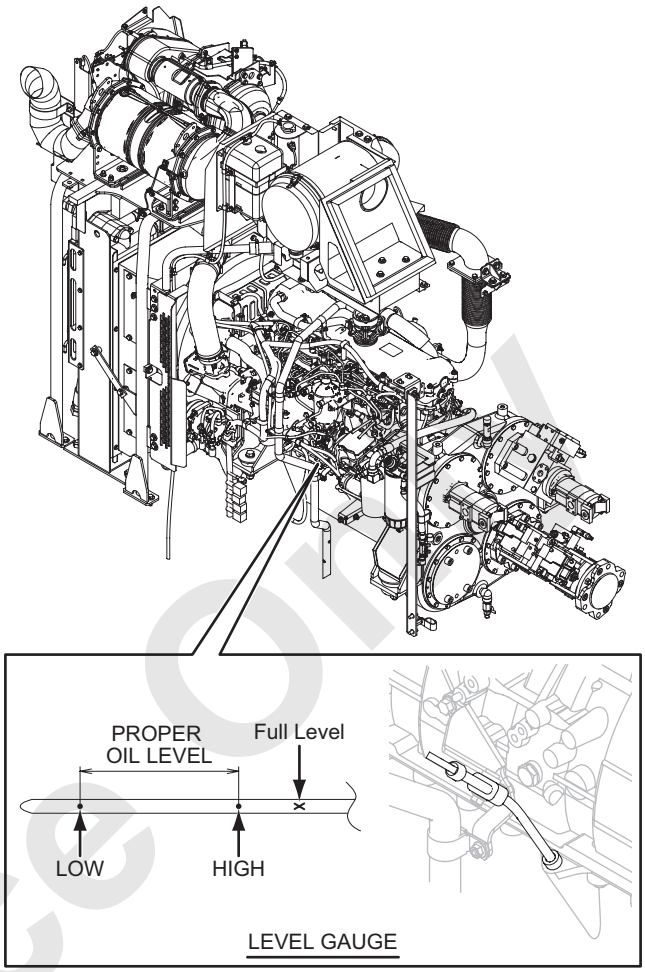

Reference Only

3. CHECKING OF COOLANT LEVEL

WARNING

Right after stop the engine, the oils and cooling water of the machine may be extremely hot and may cause scald.
Inspection, replacement, draining and replenishment are to be carry out after cool down.
Failure to observe this precaution may result in a serious injury.

WARNING

- **The long life coolant has an inflammability property, keep away flammable at the inspection/replacement.**
  Failure to observe this precaution may result in serious injuries, property damage or loss of life.
- **The long life coolant is poisonous for human body, ensure not to enter/disperse to eyes and skins.**
  If anything adhesive to the eyes or skin, wash thoroughly with plenty of water and seeing a doctor.
  Failure to observe this precaution may result in a serious injury.

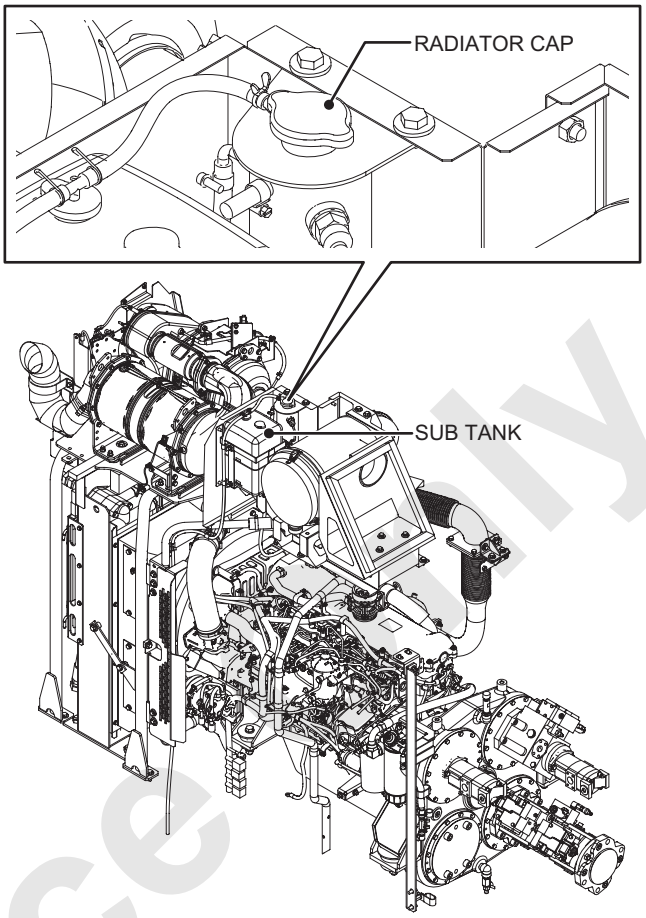

After removing the radiator cap, confirm the coolant level, and also confirm the coolant level of the sub-tank.

When cooling water is insufficient, fill the long life coolant up to the throat of filling port of the radiator and fill up to “FULL” mark position of sub-tank.

Refer to P.7-74 for replacing coolant.

The concentration of the long life coolant is to be referred the table on the right.

Capacity of coolant : 30 L (7.9 gal)

Atmospheric temperature : °C (°F)	Volume of Cooling water : L (gal)	Volume of LLC : L (gal)	LLC ratio
-17 (1.4)	21 (5.5)	9 (2.4)	30%
-21 (-5.8)	19 (5.0)	11 (2.9)	35%
-25 (-13)	18 (4.8)	12 (3.2)	40%
-31 (-23.8)	16 (4.2)	14 (3.7)	45%
-40 (-40)	15 (4.0)	15 (4.0)	50%

Reference only

4. CHECK OF HYDRAULIC OIL LEVEL

If the hydraulic oil level is within the specified range shown in the label of the level gauge with the following conditions and the engine running, the oil level is normal.
(Oil temperature : 20°C [68°F])

Gantry cylinder	Extended
Crawler ext/retr cylinder	Extended
Translifter cylinder	Retracted
CWT self removal cylinder	Retracted

Refer to P.7-78 for replacing hydraulic oil.

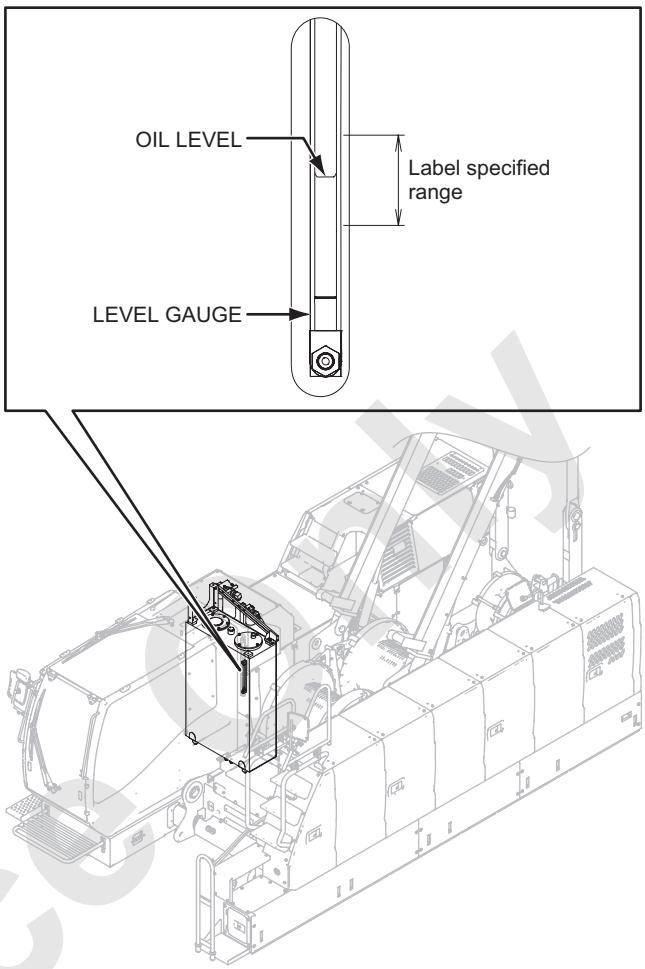

Reference Only

WEEKLY OR EVERY 50 HOURS

5. GREASING OF DRUM LOCK

Supply grease to the drum lock of the front, rear and third drum (option) from the grease fittings provided on the front face of the swing frame.
(2 locations or 3 locations for 3rd drum is equipped)

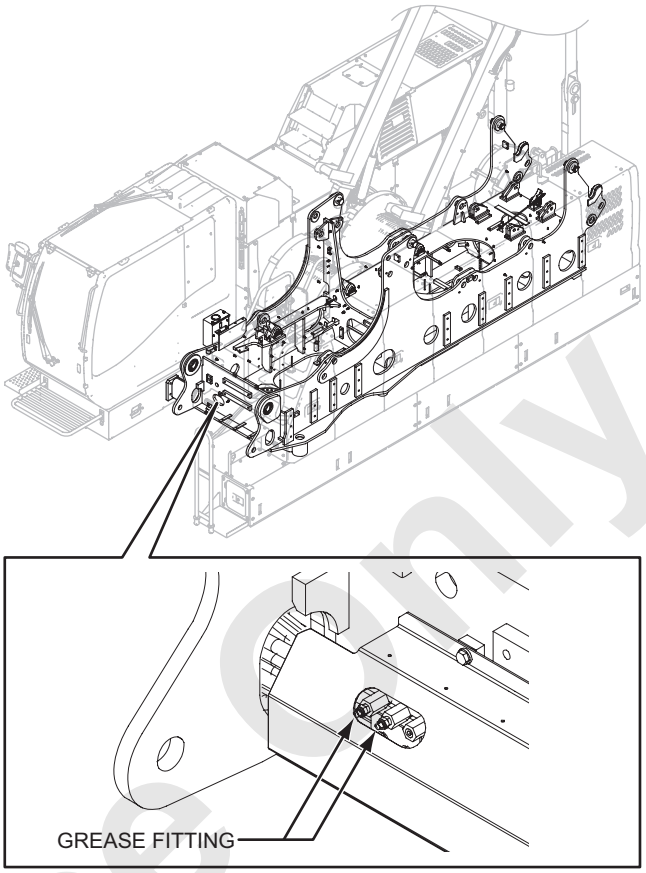

Supply grease to the boom drum lock from the grease fitting provided under the swing frame.

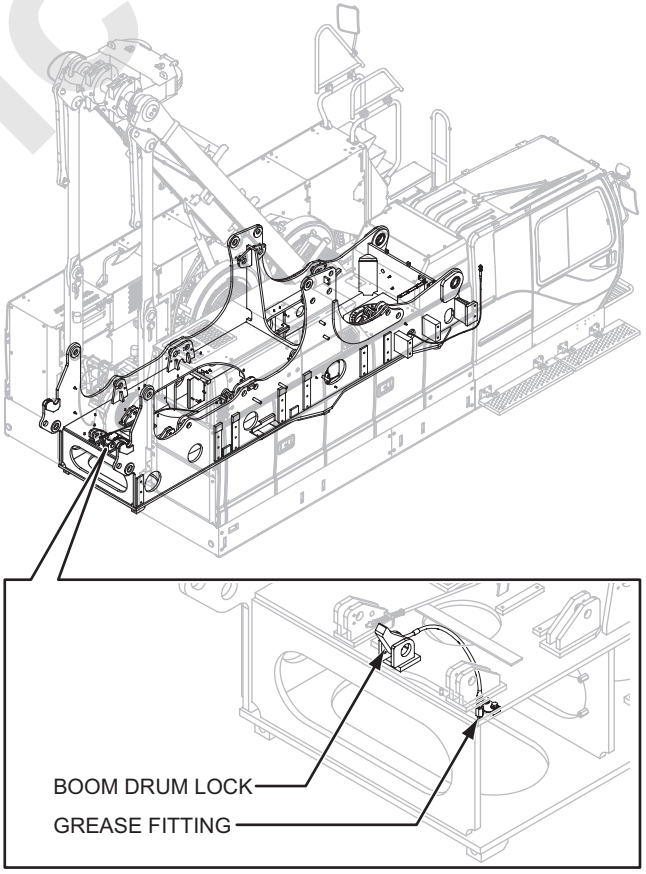

Reference Only

6. DRAIN OF HYDRAULIC OIL TANK

Before starting operation, loosen the drain plug to drain water and sediment from the tank.
(2 locations)

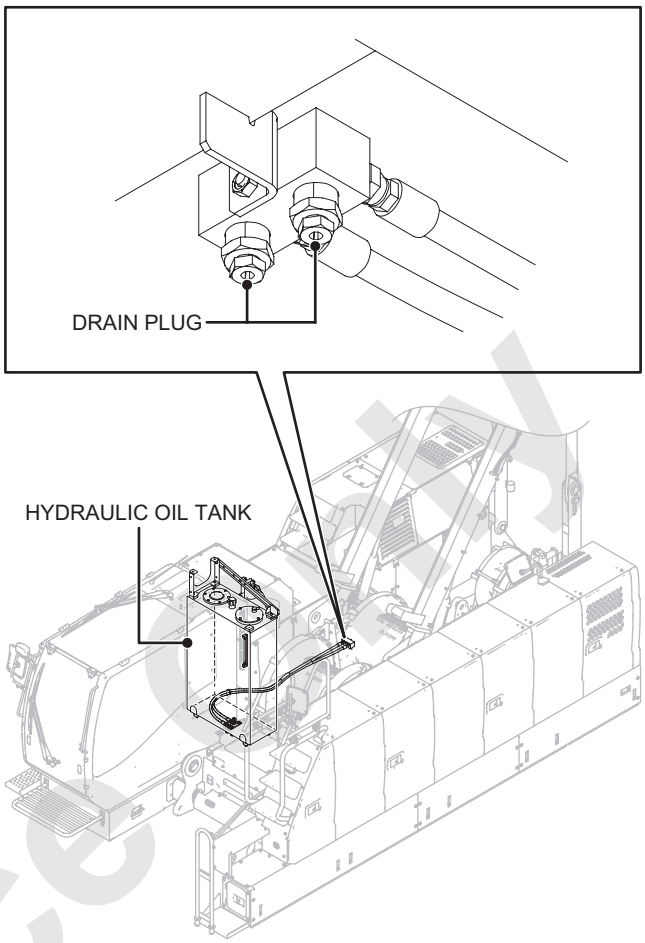

Reference Only

MONTHLY OR EVERY 100 HOURS

7. OIL LEVEL CHECK OF SWING REDUCTION UNIT

Check the oil level more than 30 minutes after the operation is stopped.
If the oil level is in the proper oil level, it is normal.

Refer to P.7-76 for oil change of the swing reduction unit.

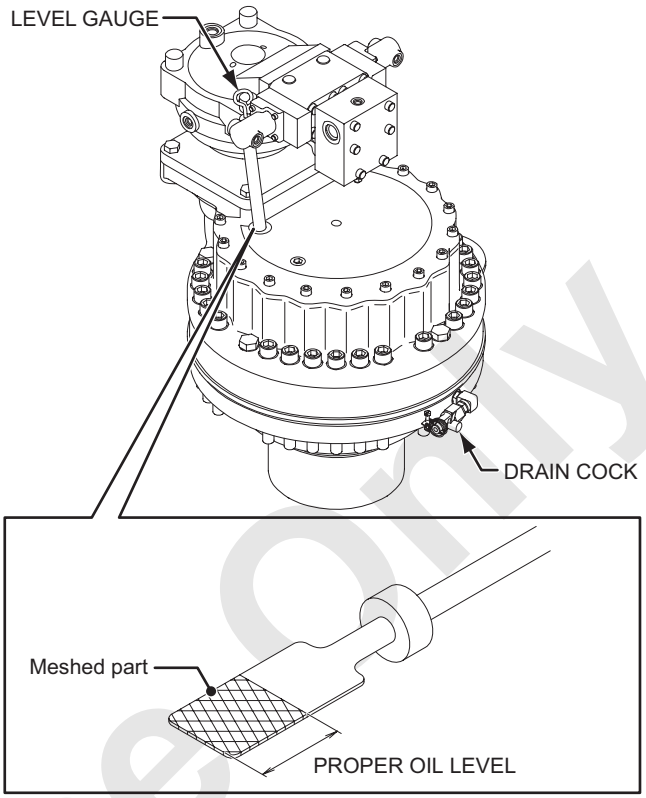

8. OIL LEVEL CHECK OF POWER DIVIDER

Check the oil level more than 30 minutes after the operation is stopped.
If the oil level is up to the red color mark of the level gauge, it is normal.

Refer to P.7-77 for oil change of the power divider.

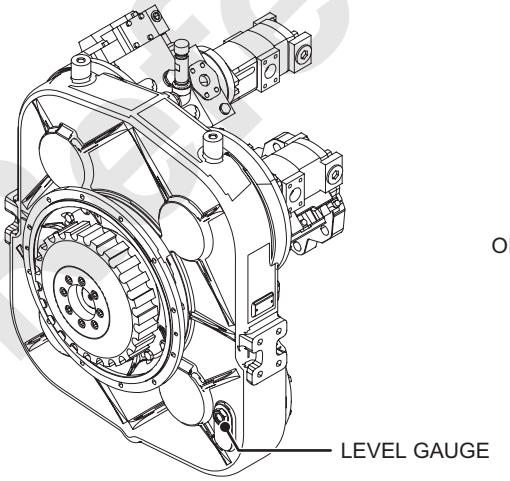

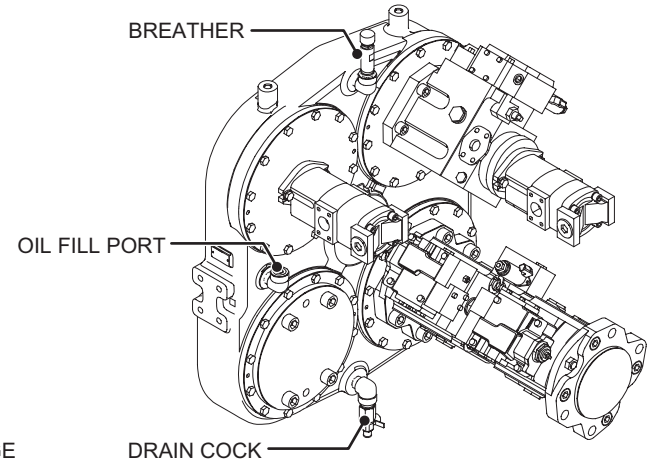

Reference Only

QUARTERLY OR EVERY 250 HOURS

9. GREASING OF DRUM SHAFT BEARING (FRONT, REAR, THIRD DRUM [OPTION])

Supply grease from the grease fitting provided on the bearing sleeve on the rope clamp side. There are 2 grease fittings but take one easiest grease point. (It is not necessary to grease from all 2 points.)

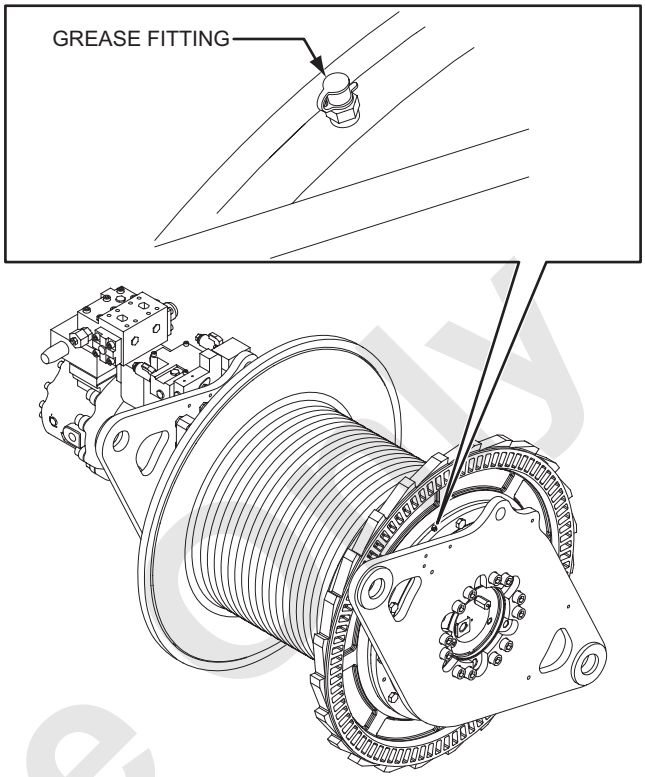

10. OIL LEVEL CHECK OF REDUCTION UNIT (FRONT, REAR, THIRD DRUM [OPTION])

More than 30 minutes of operation stop, check the oil level.
If the oil level is up to red mark on the oil level meter, it is normal in case of front drum and rear drum.

Refer to P.7-76 for oil change of reduction unit (front, rear and third drum [option]).

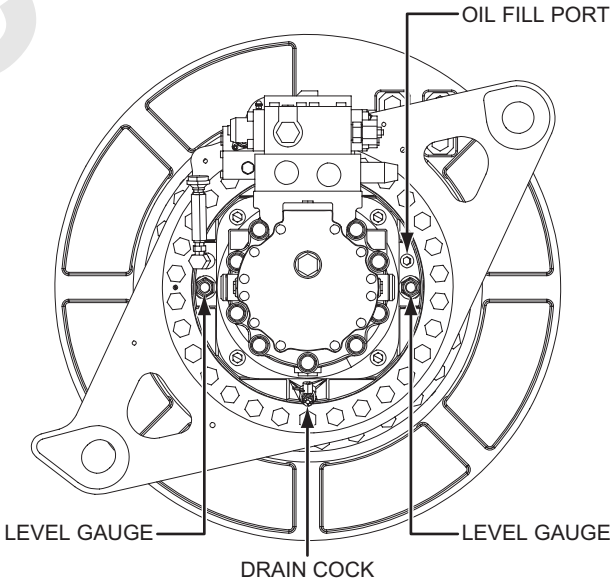

Reference Only

11. OIL LEVEL CHECK OF REDUCTION UNIT (BOOM DRUM)

More than 30 minutes of operation stop, check the oil level.
If the level is up to the specified point, it is normal.

Refer to P.7-77 for oil change of the winch reduction unit (boom drum).

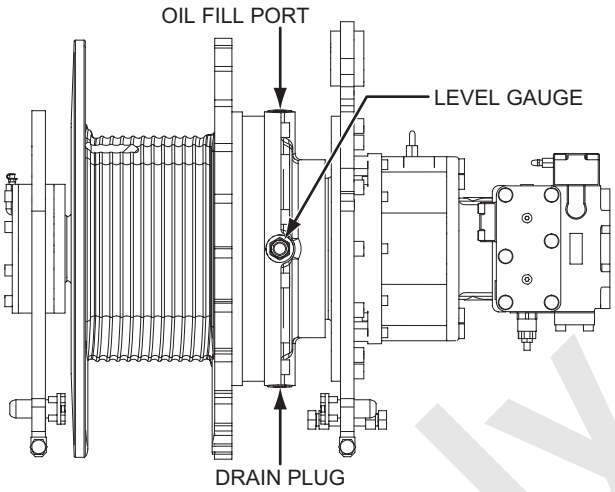

12. ENGINE OIL CHANGE

WARNING

Right after stop the engine, the oils and cooling water of the machine may be extremely hot and may cause scald.
Inspection, replacement, draining and replenishment are to be carry out after cool down.
Failure to observe this precaution may result in a serious injury.

CAUTION

In order to keep good function of the emission control devices, it is recommended to use the specified brand (recommended) engine oil.

(1) Prepare the container about 30 L (7.9 gal).
(2) Loosen the drain plug and drain the oil to the prepared container.
(3) Tighten the drain plug.
(4) Check the drained oil for no metal powder mixed and pour the new oil to the fill port.
When fill oil use the long nozzle oil jug which is provided as an attached tool.
When changing oil, replace the oil filter.
(5) When the filter element and the total quantity of the oil are changed, pour the oil using the full level position of oil pouring.
(Do not start the engine.)
Drive the engine for a few minutes.
Stop the engine for about 30 minutes.
Then confirm that the oil level is in the proper level.

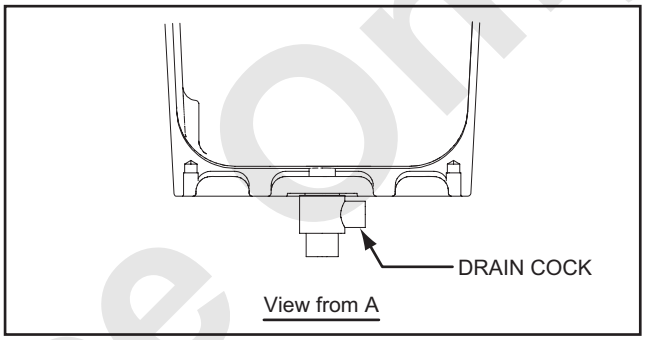

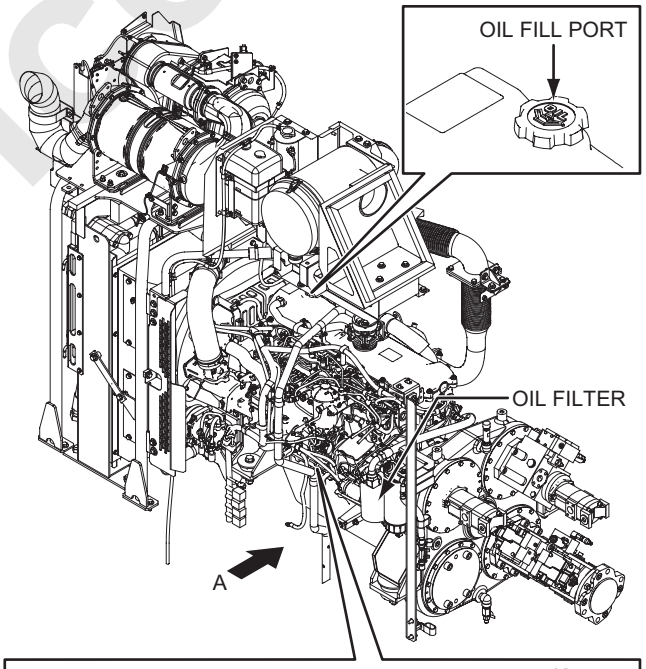

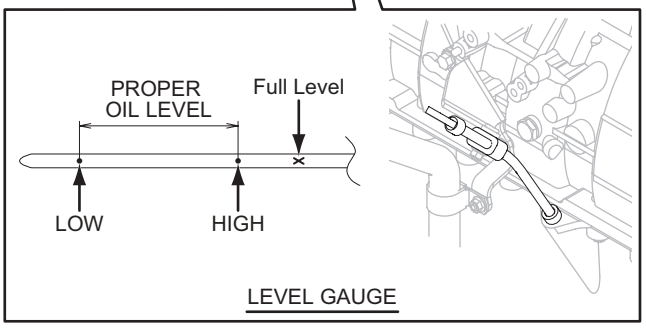

Reference Only

HALF YEARLY OR EVERY 500 HOURS

13. DRAIN OF FUEL TANK

Loosen the drain plug and drain the water or sediment in the tank.

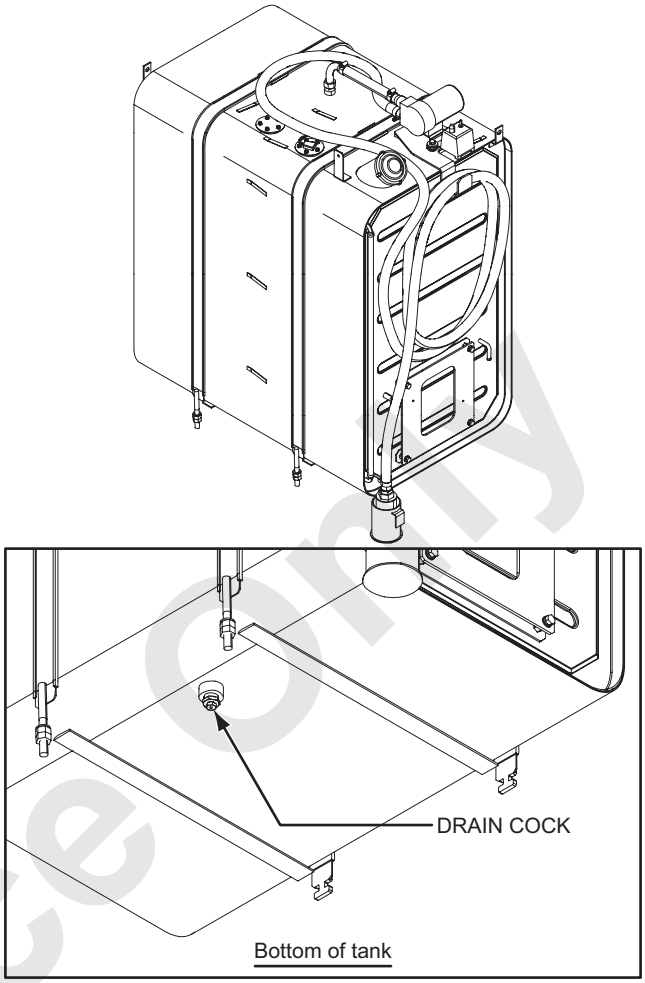

Reference Only

YEARLY OR EVERY 1,000 HOURS

14. CHANGE OF COOLANT

WARNING

Right after stop the engine, the oils and cooling water of the machine may be extremely hot and may cause scald.
Inspection, replacement, draining and replenishment are to be carry out after cool down.
Failure to observe this precaution may result in a serious injury.

(1) Loosen the drain cock in the bottom of the radiator and the plug of the water jacket, drain the coolant.
(2) Combine soft water (tap water) and long life coolant, and fill the radiator up to the foot of the water supply port.
In order to prevent air from entering, slowly pour coolant.
After coolant pouring, confirm that the coolant level does not lower, then tighten the radiator cap.
(3) Start and run the engine for about 1 minute. Stop the engine, and check coolant level.
If insufficient, add coolant.

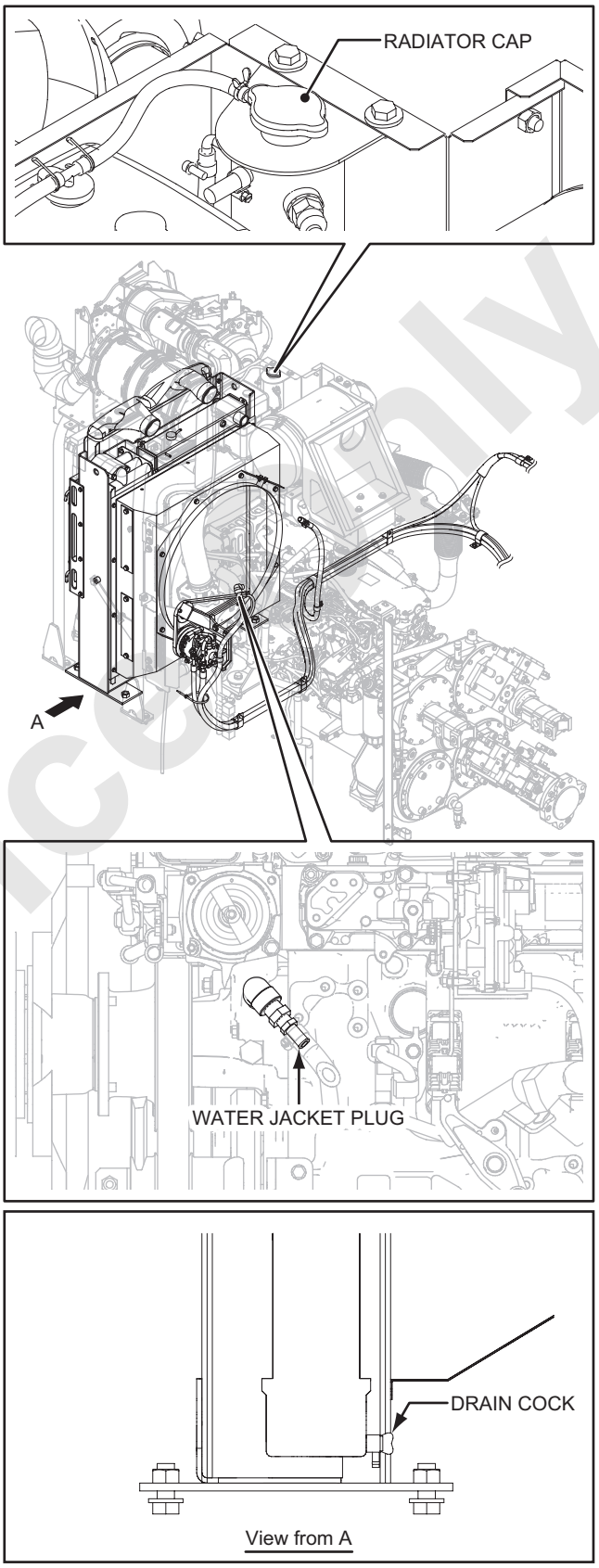

Reference Only

- COOLANT BLENDING

  Blend the coolant (long life coolant) based on ambient temperature.
  Refer to P.7-117 for blending.

WARNING

- **The long life coolant has an inflammability property, keep away flammable at the inspection/replacement.**
  Failure to observe this precaution may result in serious injuries, property damage or loss of life.
- **The long life coolant is poisonous for human body, ensure not to enter/disperse to eyes and skins.**
  If anything adhesive to the eyes or skin, wash thoroughly with plenty of water and seeing a doctor.
  Failure to observe this precaution may result in a serious injury.

Note

- **When ship the machine from factory, radiator is supplied with coolant to prevent rust and freezing in the cooling circuit combined with Long life coolant (antifreeze) of 30% or 55% (cold region) concentration by volume.**
- **The cooling water shall be used clean soft water (tap water) which has an anti-water deposit combined with.**
  If the cooling water is getting dirty and./or bubble, replace as soon as possible.
- **None-Amine anti-freezing is used for this machine.**

Reference Only

15. OIL CHANGE OF SWING REDUCTION UNIT

With the gauge stick drawn out, loosen the drain cock, and drain the oil into a prepared container. Shut the drain cock and supply the specified oil through the fill port until the oil level reaches the specified level.

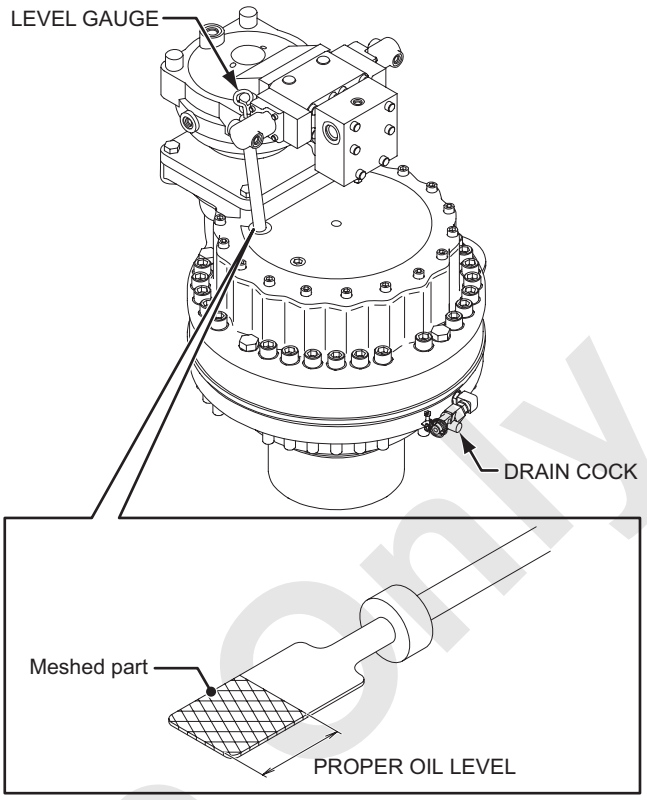

WARNING

Right after stop the engine, the oils and cooling water of the machine may be extremely hot and may cause scald.
Inspection, replacement, draining and replenishment are to be carry out after cool down.
Failure to observe this precaution may result in a serious injury.

16. OIL CHANGE OF REDUCTION UNIT (FRONT, REAR, THIRD DRUM [OPTION])

Prepare a container of approx. 30 L (7.9 gal) capacity.
With the oil fill plug removed, turn the lever of the drain cock to drain the oil into the prepared container.
Return the lever of the drain cock to the original position, and supply the specified oil through the oil fill port until the oil level reaches the specified oil level.

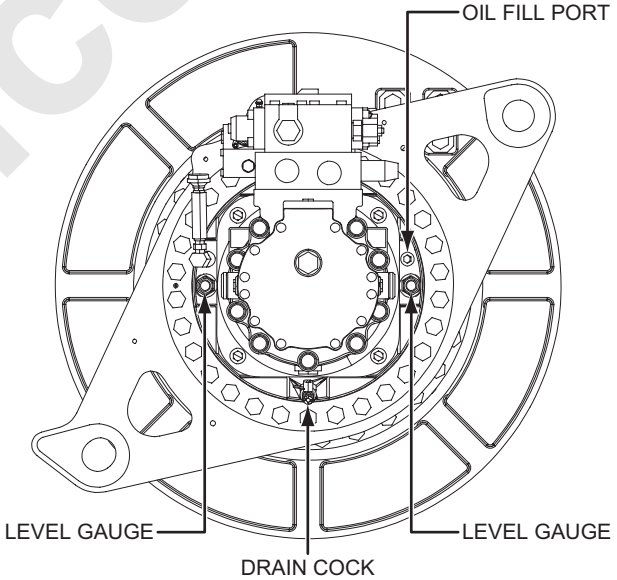

WARNING

Right after stop the engine, the oils and cooling water of the machine may be extremely hot and may cause scald.
Inspection, replacement, draining and replenishment are to be carry out after cool down.
Failure to observe this precaution may result in a serious injury.

Reference Only

17. OIL CHANGE OF REDUCTION UNIT (BOOM DRUM)

Prepare a container of approx. 5 L (1.3 gal) of capacity.
Rotate the drum to make the level gauge in horizontal position.
With the oil fill port plug removed, remove the drain plug to drain the oil into the container.
Return the drain plug to the original position, and supply the specified oil through the oil fill port until the oil level reaches the specified level.

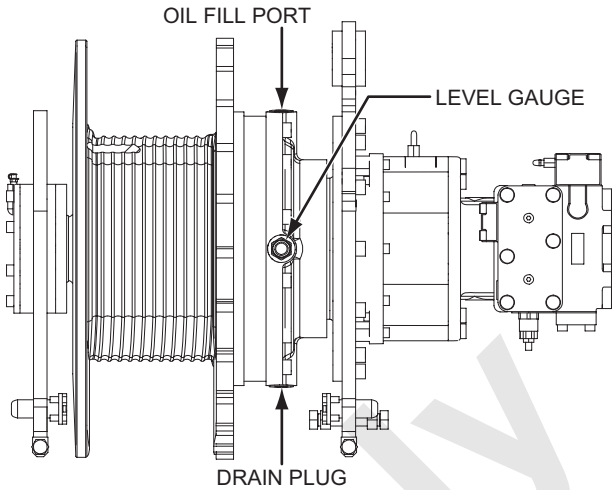

18. OIL CHANGE OF POWER DIVIDER

Prepare a container of approx. 20 L (5.3 gal) of capacity.
With the cap of the oil fill port plug removed, turn the lever of the drain cock to drain the oil into the container.
Return the lever of the drain cock to the original position pour the specified oil through the oil fill port until the oil level reaches the specified level.

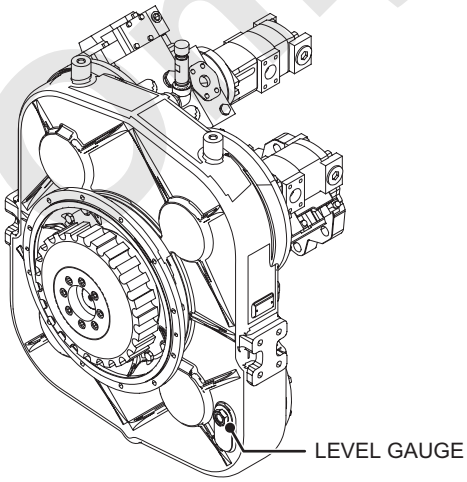

⚠ WARNING

Right after stop the engine, the oils and cooling water of the machine may be extremely hot and may cause scald.
Inspection, replacement, draining and replenishment are to be carry out after cool down.
Failure to observe this precaution may result in a serious injury.

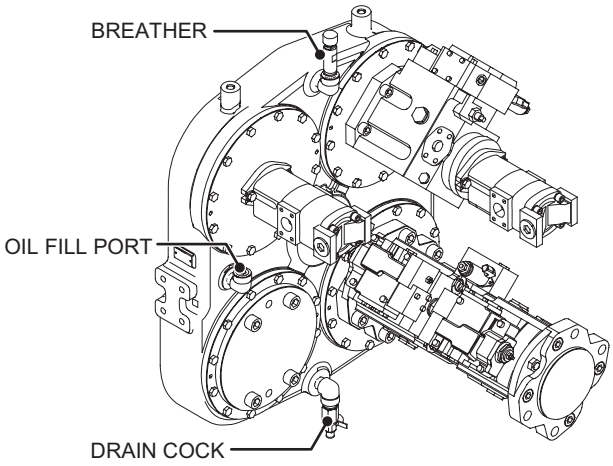

Reference Only

EVERY TWO YEARS OR 2,000 HOURS

19. CHANGE OF HYDRAULIC OIL

It is a guideline to replace hydraulic oil every 2 years or 2,000 hours counting by the hour meter whichever comes first, but if the oil is remarkably contaminated or deteriorated, replace the oil regardless of such interval.

(1) Prepare a container of approx. 400 L (105.6 gal).
(2) Remove the cap of the filler port and filter cover.
(3) Loosen the drain plug and drain the hydraulic oil into the prepared container.
(4) Reinstall the drain plug fill the tank with the specified hydraulic oil through the fill port up to the specified level.
(5) Reinstall the filter cover and oil supply cap.
(6) Check the oil level again.

When changing hydraulic oil, change the filter also at the same time.

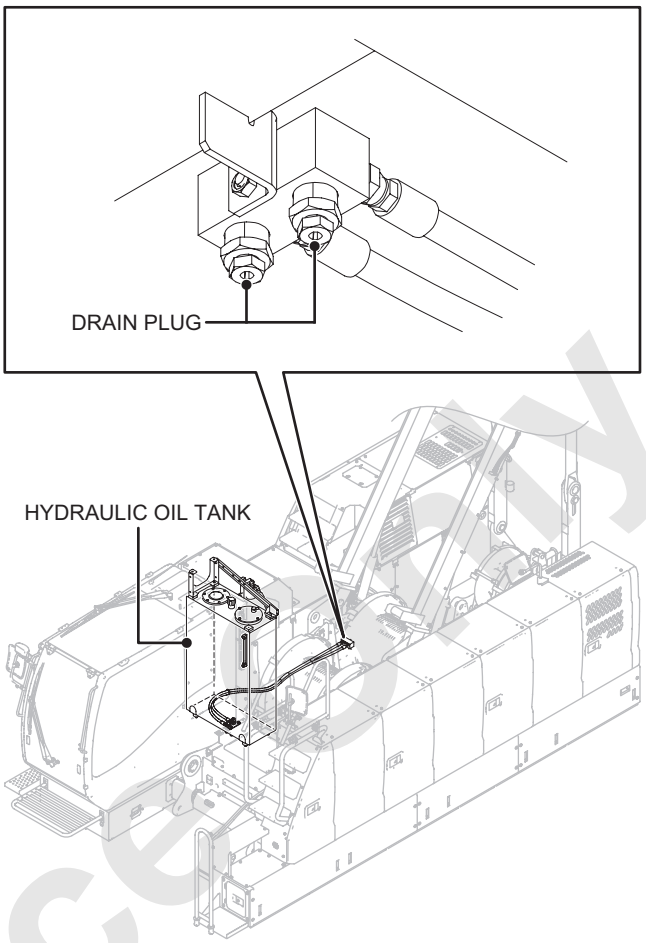

⚠ WARNING

Right after stop the engine, the oils and cooling water of the machine may be extremely hot and may cause scald.
Inspection, replacement, draining and replenishment are to be carry out after cool down.
Failure to observe this precaution may result in a serious injury.

⚠ CAUTION

Take extra care not to stat the engine without hydraulic oil in the tank to avoid catastrophic failure of the pumps.
Failure to observe this precaution may lead to damage the parts.

20. INSPECT WATER LEVEL OF WASHER TANK

Check the water level in the washer tank.
Add washer liquid to the tank if it is insufficient.

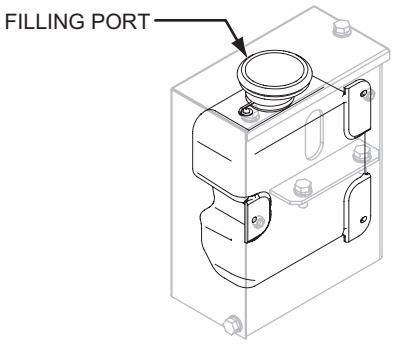

Reference Only

[INSPECTION, GREASING OF LOWER MACHINERY]

WEEKLY OR EVERY 50 HOURS

21. GREASING OF SWING BEARING

Grease through the grease fitting provided on the swing bearing outer race.

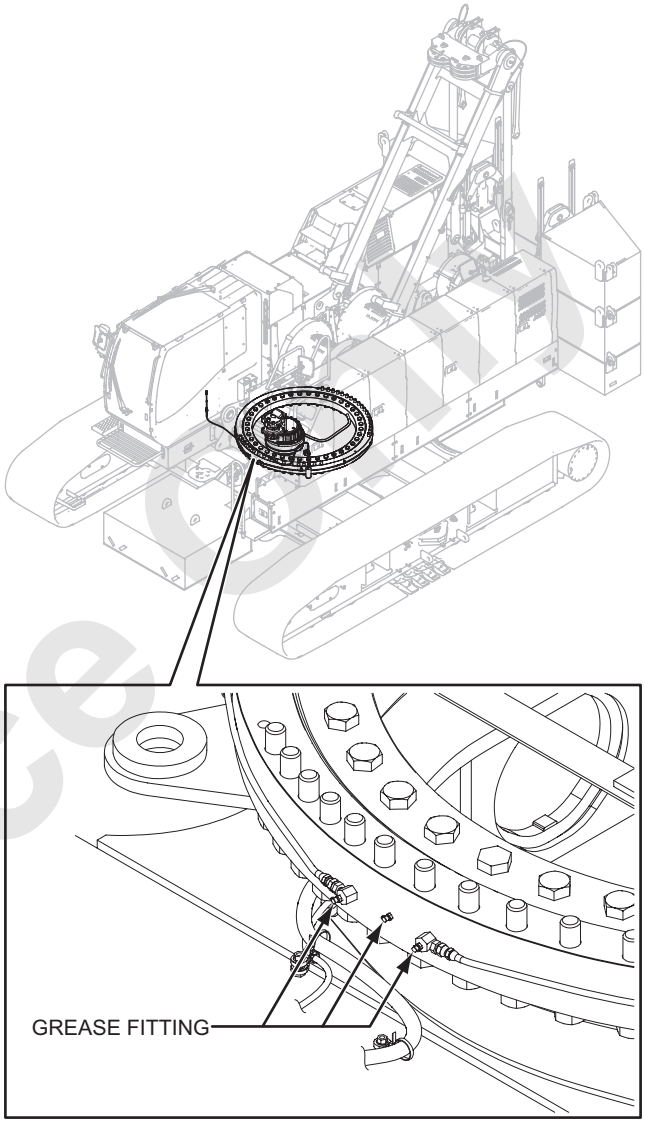

Reference Only

QUARTERLY OR EVERY 250 HOURS

22. OIL LEVEL CHECK OF TRAVEL REDUCTION UNIT

Check the oil level more than 30 minutes after the operation is stopped.
With the drain plug positioned at the lower side, remove the level plug.
If the oil level is up to the bottom of the level plug opening, it is normal.

Refer to P.7-82 for oil change of the travel reduction unit.

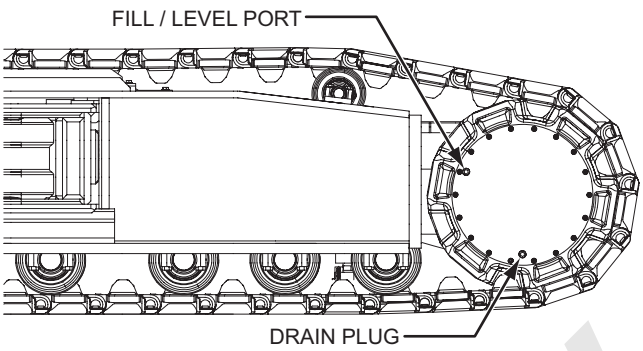

23. GREASING OF SWING BEARING RING GEAR

Removing the upper and lower cover in the swing frame front, turn the upper little by little, and grease so that grease goes around the entire ring gear.

WARNING

Apply lubricant to the ring gear, use a brush or pallet and not by hands to avoid being trapped. Failure to observe this precaution may result in a serious injury.

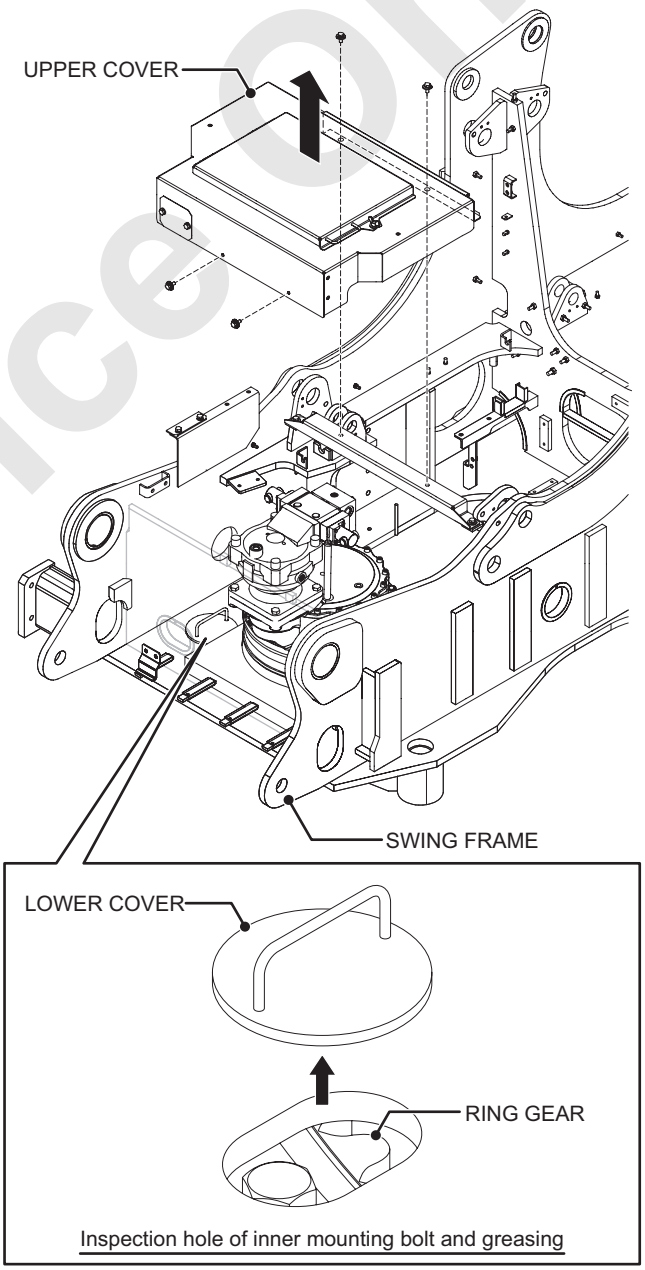

Reference Only

24. GREASING OF AXLE EXTENSION

Apply grease from the grease fitting provided in the rotating area of the axle extension.
Greasing from the inside with the crawler extended. (4 locations)

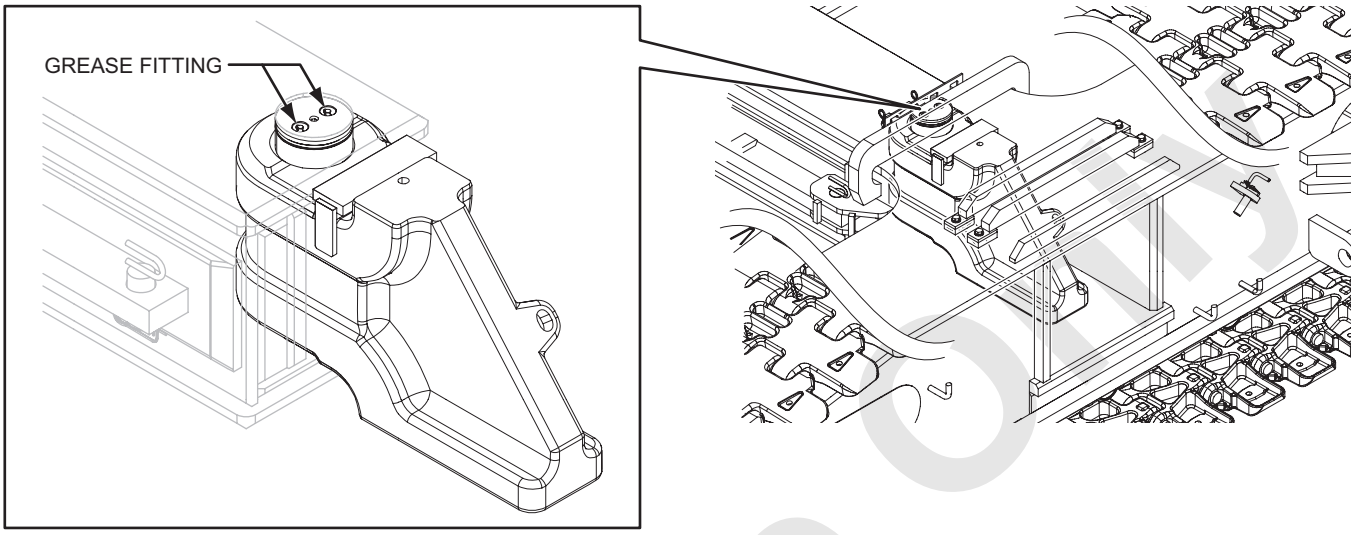

25. GREASING OF TRANSLIFTER PIN

Supply grease from the grease fitting provided on the rotating area of the translifter arm.
(4 locations on upper side, 4 locations on lower side, total 8 locations)

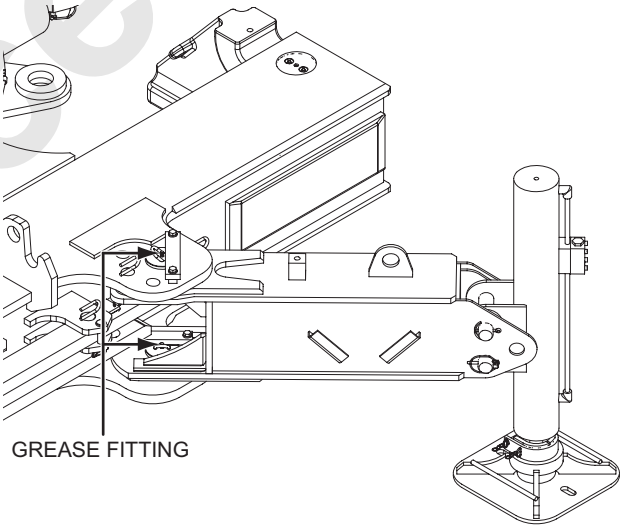

Reference Only

YEARLY OR EVERY 1,000 HOURS

26. OIL CHANGE OF TRAVEL REDUCTION UNIT

Prepare a container of approx. 30 L (7.9 gal) of capacity.
With the level plug removed, remove the drain plug to drain the oil into the container.
Reinstall the drain plug, pour the specified oil through the fill/level port until the oil reaches the specified level.

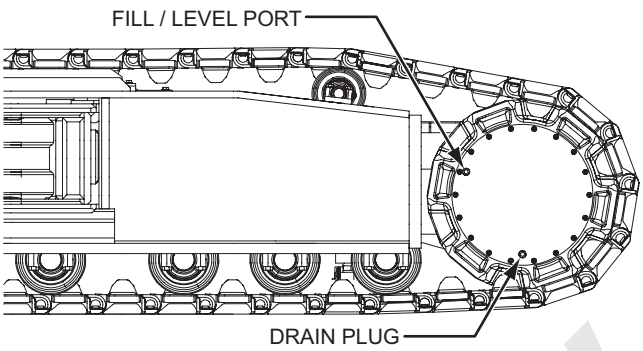

WARNING

Right after stop the engine, the oils and cooling water of the machine may be extremely hot and may cause scald.
Inspection, replacement, draining and replenishment are to be carry out after cool down.
Failure to observe this precaution may result in a serious injury.

AT OVERHAULING OR AS REQUIRED

27. OIL CHANGE OF LOWER ROLLER

Remove the both end plugs to drain the oil.
Supply the specified oil of specified amount.
To replace oil, consult with authorized Manitowoc distributor.

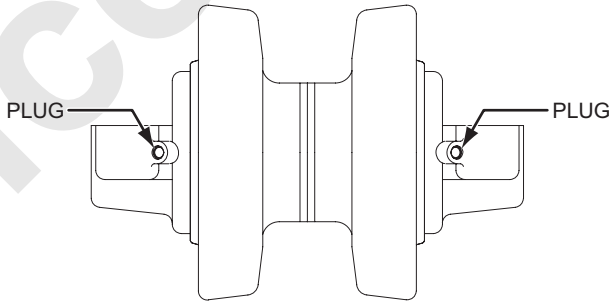

28. OIL CHANGE OF UPPER ROLLER

Remove the both end plugs to drain the oil.
Supply the specified oil of specified amount.
To replace oil, consult with authorized Manitowoc distributor.

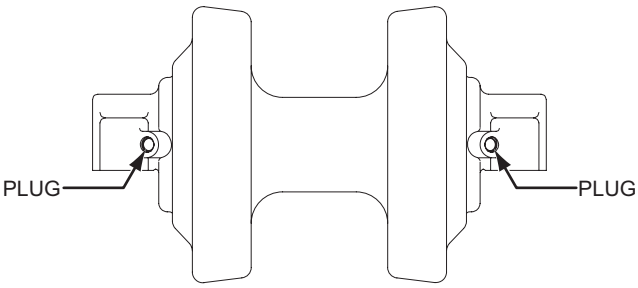

29. OIL CHANGE OF IDLER WHEEL

Remove the plug of the sliding block to drain the oil.
Supply the specified oil of specified amount.
To replace oil, consult with authorized Manitowoc distributor.

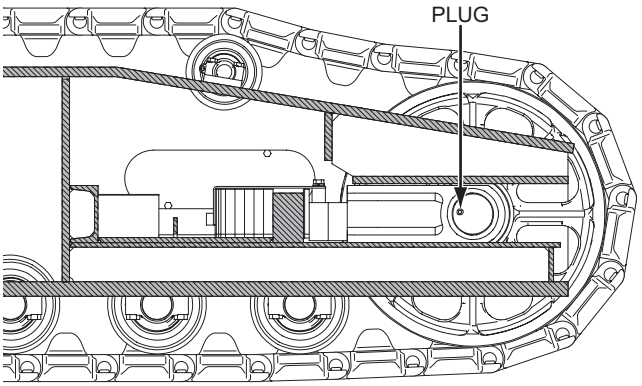

Reference Only

[INSPECTION, LUBRICATION OF ATTACHMENT]

DAILY OR EVERY 8 HOURS (EVERY SHIFT)

30. GREASING OF BOOM FOOT PIN

Grease through the grease fitting on the foot pin. (Left and right)

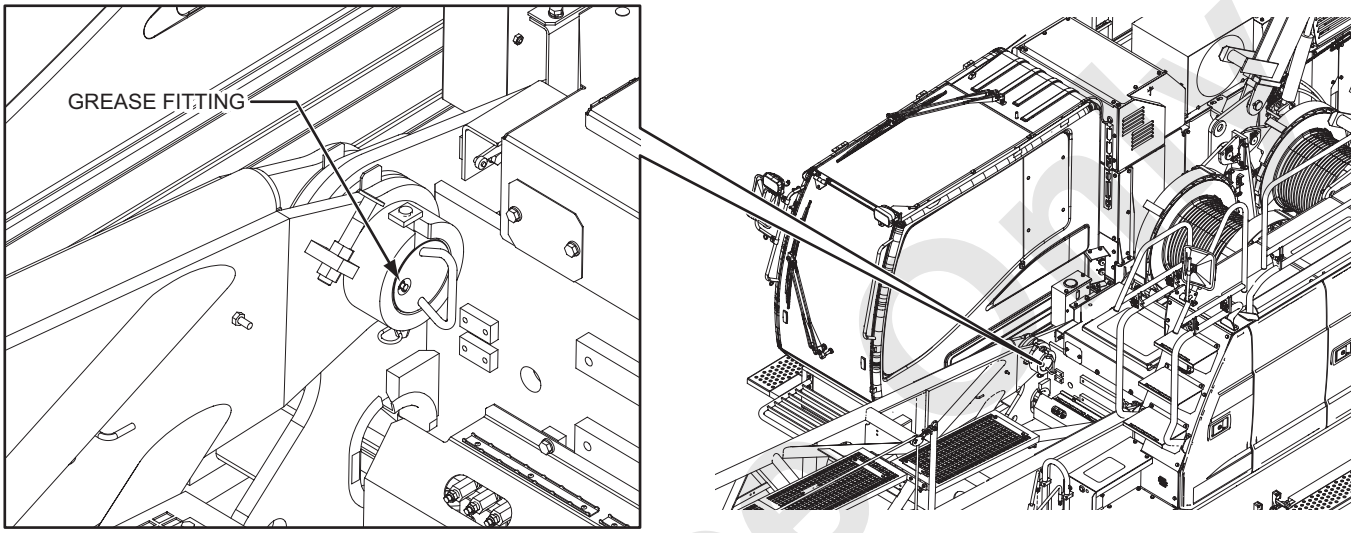

31. GREASING OF GANTRY LINK

Grease through the grease fitting provided on the front member.

WARNING

When working at a high elevation, be sure to use a safety belt to prevent falling.
Failure to observe this precaution may result in a serious injury or loss of life.

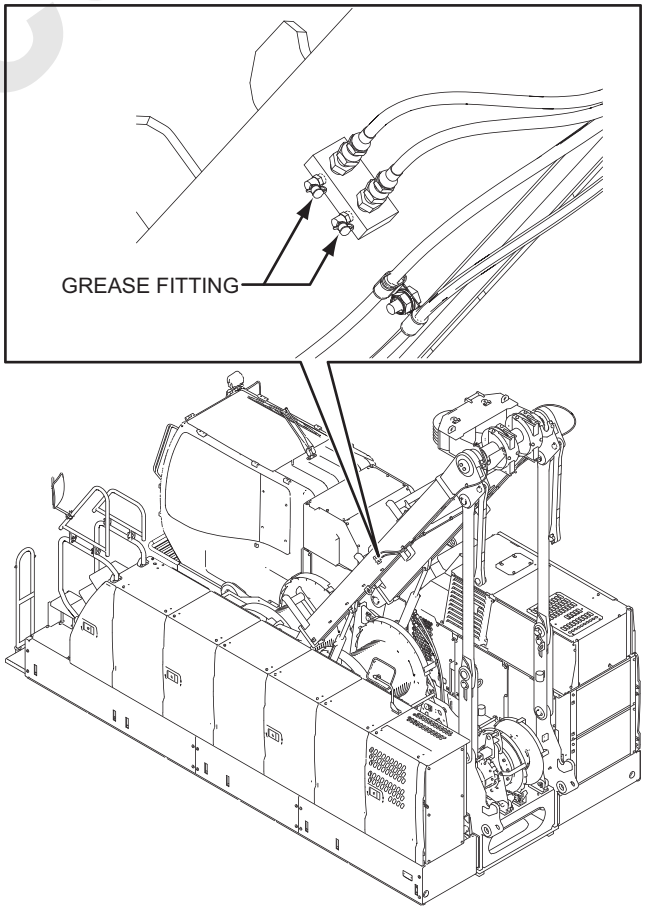

Reference Only

WEEKLY OR EVERY 50 HOURS

32. GREASING OF HOOK SHEAVE

Grease from the grease fitting on the sheave pin.

33. GREASING OF HOOK BEARING

Grease from the grease fitting on the bearing cap.

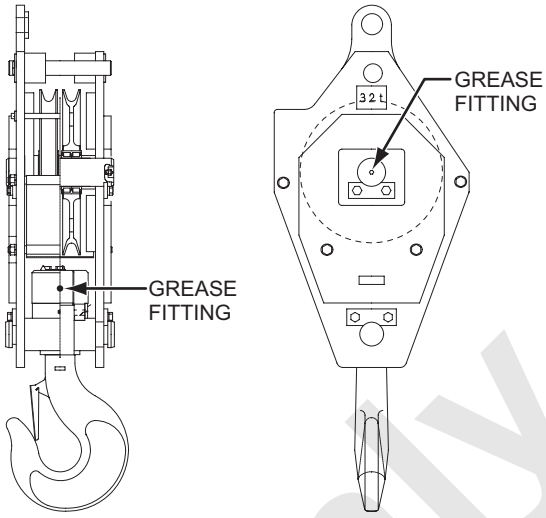

34. GREASING OF BALL HOOK BEARING

Grease from the grease fitting provided on the bearing cap.

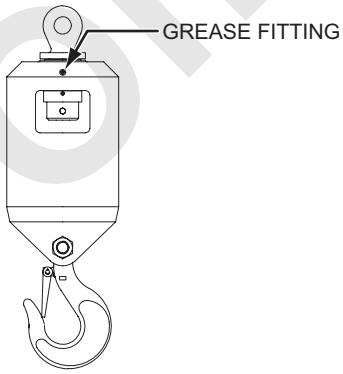

Reference Only

YEARLY OR EVERY 1,000 HOURS

35. **GREASING OF BOOM POINT SHEAVE**
36. **GREASING OF IDLER SHEAVE**
37. **GREASING OF AUXILIARY SHEAVE**
38. **GREASING OF UPPER SPREADER SHEAVE**
39. **GREASING OF LOWER SPREADER SHEAVE**
40. **GREASING OF GANTRY PEAK SHEAVE**
41. **GREASING OF STRUT SHEAVE**
42. **GREASING OF STRUT EQUALIZER SHEAVE**
43. **GREASING OF JIB POINT SHEAVE**

Apply grease to the sheave pin or sheave by replacing a plug with a grease nipple.

⚠ WARNING

- **When working at a high elevation, be sure to use a safety belt to prevent falling.**
  Failure to observe this precaution may result in a serious injury or loss of life.
- **Use a scaffolding board for working on the attachment.**
  Failure to observe this precaution may result in a serious injury or loss of life.

AS REQUIRED

44. **LUBRICATION OF FRONT, REAR DRUM HOIST WIRE ROPE**
45. **LUBRICATION OF BOOM DRUM HOIST WIRE ROPE**
46. **LUBRICATION OF BOOM GUY LINE**
47. **LUBRICATION OF JIB GUY LINE**

Apply lubricant to the wire rope based on work condition.
Use brush or spray when applying lubricant to wire rope.

⚠ WARNING

When handling the wire rope, use leather gloves to prevent injury on the fingers or hands.
Failure to observe this precaution may result in a serious injury.

Reference Only

7.4 REPLACEMENT AND CLEANING/WASHING FILTER ELEMENT AND STRAINER

7.4.1 REPLACEMENT, CLEANING, WASHING POINTS OF FILTER ELEMENT AND STRAINER

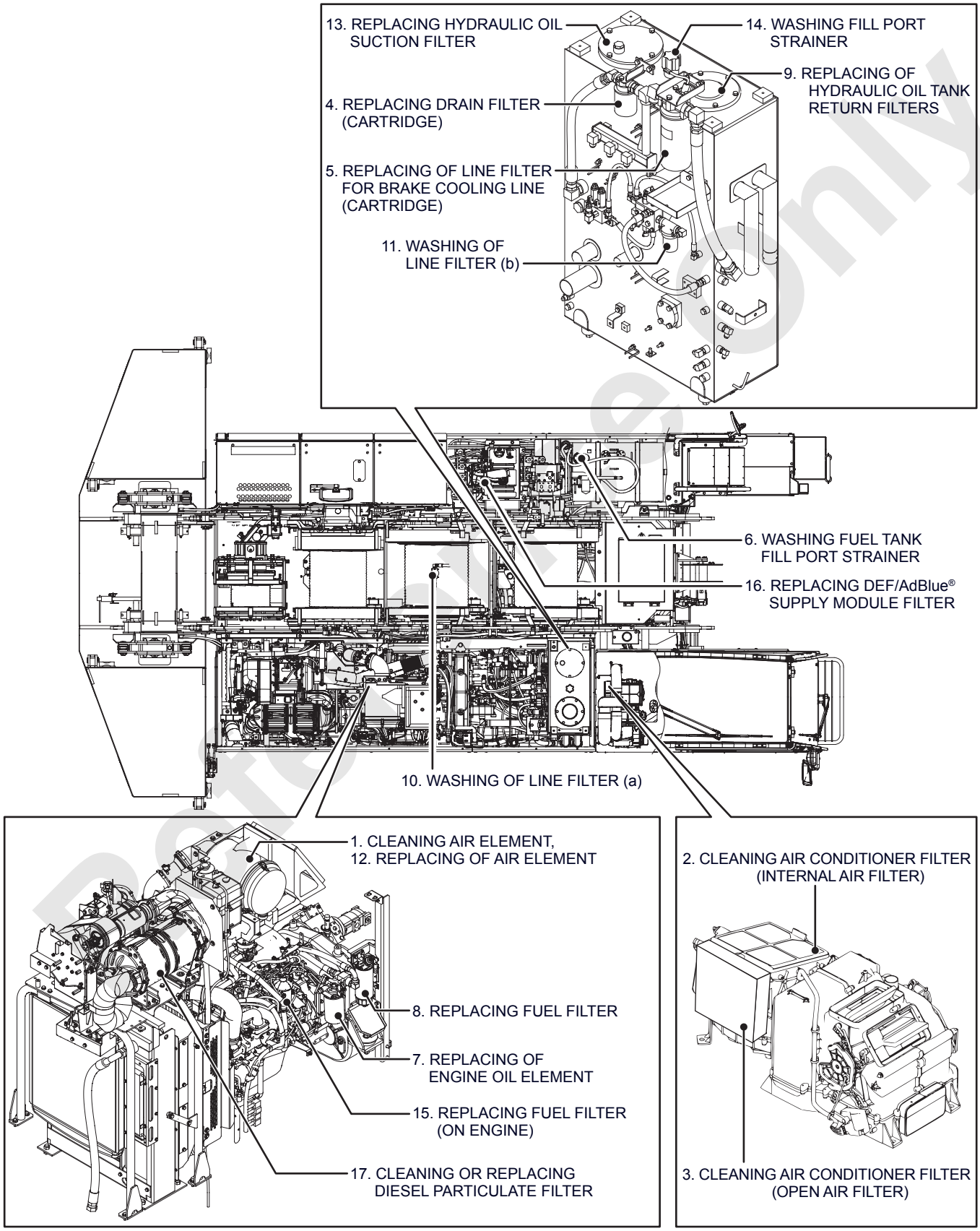

Reference Only

The number in the list below is corresponding to the figure and table on “7.4.2 REPLACEMENT, CLEANING, WASHING METHODS OF FILTER ELEMENT AND STRAINER”.

Table of replacement, cleaning/washing points of filter element and strainer.

Check interval	Check, lubrication, change point clean	Part No.	Quantity	Reference page
Monthly or every 100 hours	1. CLEANING AIR ELEMENT		1	P.7-88
	2. CLEANING AIR CONDITIONER FILTER (INTERNAL AIR FILTER)		1	P.7-88
	3. CLEANING AIR CONDITIONER FILTER (OPEN AIR FILTER)		1	P.7-88
Quarterly or every 250 hours	4. REPLACING DRAIN FILTER (CARTRIDGE) *		1	P.7-90
	5. REPLACING OF LINE FILTER FOR BRAKE COOLING LINE (CARTRIDGE) *		1	P.7-90
	6. WASHING FUEL TANK FILL PORT STRAINER		1	P.7-90
	7. REPLACING OF ENGINE OIL ELEMENT		1	P.7-91
Half yearly or every 500 hours	8. REPLACING FUEL FILTER		1	P.7-93
Yearly or every 1,000 hours	9. REPLACING OF HYDRAULIC OIL TANK RETURN FILTERS		1	P.7-96
	10. WASHING OF LINE FILTER (a)		1	P.7-99
	11. WASHING OF LINE FILTER (b)		1	P.7-99
	12. REPLACING OF AIR ELEMENT		1	P.7-100
2 yearly or every 2,000 hours	13. REPLACING HYDRAULIC OIL SUCTION FILTER		1	P.7-100
	14. WASHING FILL PORT STRAINER		1	P.7-101
	15. REPLACING FUEL FILTER (ON ENGINE)		1	P.7-102
	16. REPLACING DEF/AdBlue® SUPPLY MODULE FILTER		1	P.7-104
Every 4,500 hours	17. CLEANING OR REPLACING DIESEL PARTICULATE FILTER		1	P.7-107

* Perform when at first 50 hours from new and after overhauling too.

Note

The part number described in the operator’s manual is to be changed without prior notice. When place an order, please confirm the part number with the parts manual or the engine hand book.

Reference Only

7.4.2 REPLACEMENT, CLEANING, WASHING METHODS OF FILTER ELEMENT AND STRAINER

MONTHLY OR EVERY 100 HOURS

1. CLEANING AIR ELEMENT

Dismantle the air element and blow air from inside to remove accumulated dust.

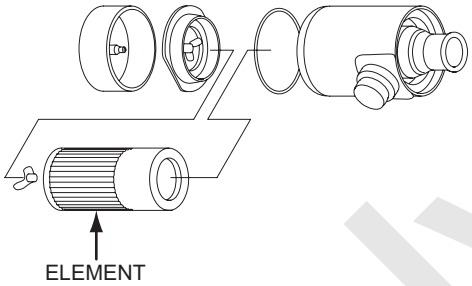

2. CLEANING AIR CONDITIONER FILTER (INTERNAL AIR FILTER)

3. CLEANING AIR CONDITIONER FILTER (OPEN AIR FILTER)

The clogged air conditioner filter causes air volume to decrease and low air conditioner performance.
Clean the filter according to the check and maintenance list.

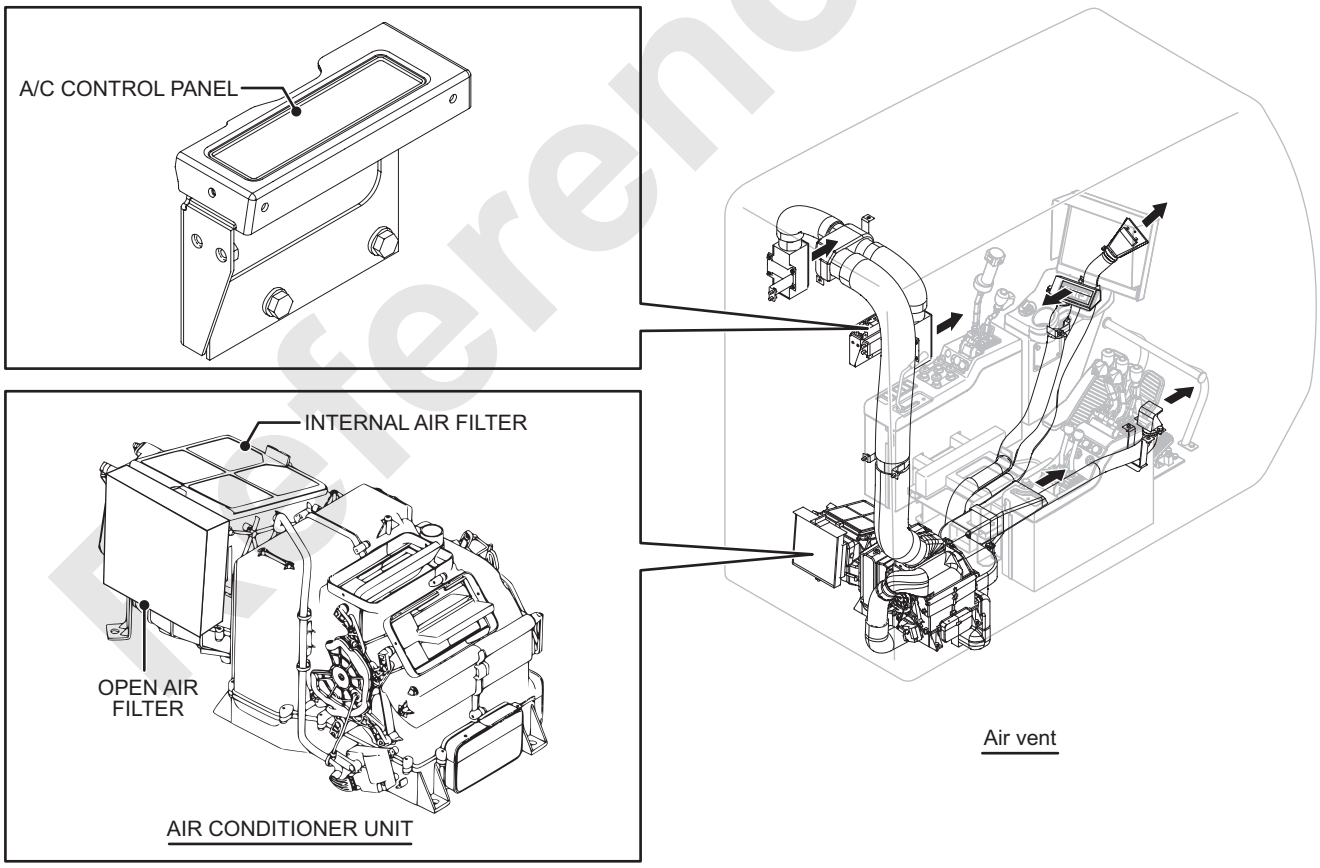

Reference Only

(1) Removal and installation

(A) Internal air filter

Removal	Remove the emergency cable cover. Then, pick the tab of the filter, and remove the filter upward.
Installation	Install the filter by reversing the removal steps.

(B) Open air filter

Removal	Remove the cover on the rear of the seat and take out the filter upward.
Installation	Take the reverse way of the installation.

(2) Cleaning

(A) Internal air filter

- Remove the inspection window in rear of the operator's seat.
- Draw out the filter upward.
- Remove any dirt including dusts from the filter with compressed air.

If the filter is excessively dirty or clogged, immerse it in lukewarm water with a neutral detergent dissolves, and wash it by moving it up, down, right, left.
Then rinse it with clean water, and let it dry completely.

(B) Open air filter

- Remove the cover on the back of the operator's seat.
- Draw out the filter.
- Remove any dirt including dusts from the filter with compressed air.

If the filter is excessively dirty or clogged, immerse it in the lukewarm water with a neutral detergent dissolved, and wash it by forcibly moving it back and forth in the solution for twenty to thirty seconds.
Then, rinse it with clean water until detergent bubbles are almost washed away, and shake the filter two or three times to drain water off.
Then, blow compressed air (approx. 5 Pa) right down to the whole surface of the filter for approx. two minutes to dry it completely.

Note

It is recommended that the filters be replaced once a year in order to maintain the filter's good performance.
Carefully handle the filters not to make a hole, nor break them.

Reference Only

QUARTERLY OR EVERY 250 HOURS

4. REPLACING DRAIN FILTER (CARTRIDGE)

Loosen the plug of the filter cover to remove the remaining pressure in the tank.
Prepare an oil container under the filter, and replace the cartridge with a new one.

5. REPLACING OF LINE FILTER FOR BRAKE COOLING LINE (CARTRIDGE)

Loosen the plug of the filter cover to remove the remaining pressure in the tank.
Prepare an oil container under the filter, and replace the cartridge with a new one.

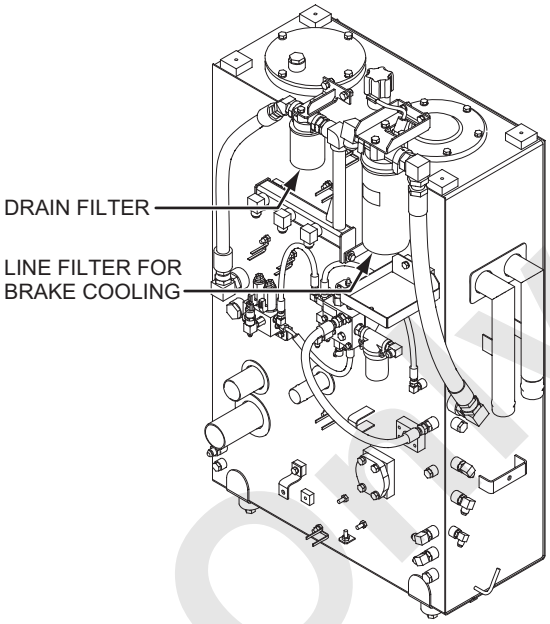

6. WASHING FUEL TANK FILL PORT STRAINER

Remove the cap, take out the strainer and sufficiently wash it with washing liquid.

WARNING

Keep away flammable from the fuel to prevent an ignition and explosion.
Failure to observe this precaution may result in serious injuries, property damage or loss of life.

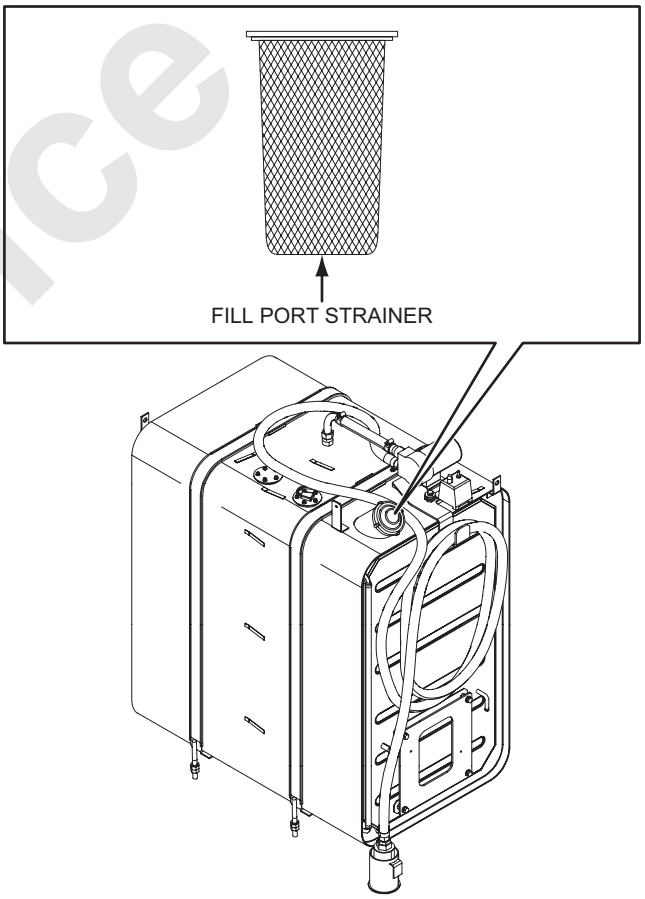

Reference Only

7. REPLACING OF ENGINE OIL ELEMENT

Note

There potential to enter the dirt, ensure to carry out the work with clean the surround of oil element.

(1) Place the container to receive the oil under the filter.
(2) Turn the element to left and remove it using the special oil filter wrench.

WARNING

Right after stop the engine, the oils and cooling water of the machine may be extremely hot and may cause scald.
Inspection, replacement, draining and replenishment are to be carry out after cool down.
Failure to observe this precaution may result in a serious injury.

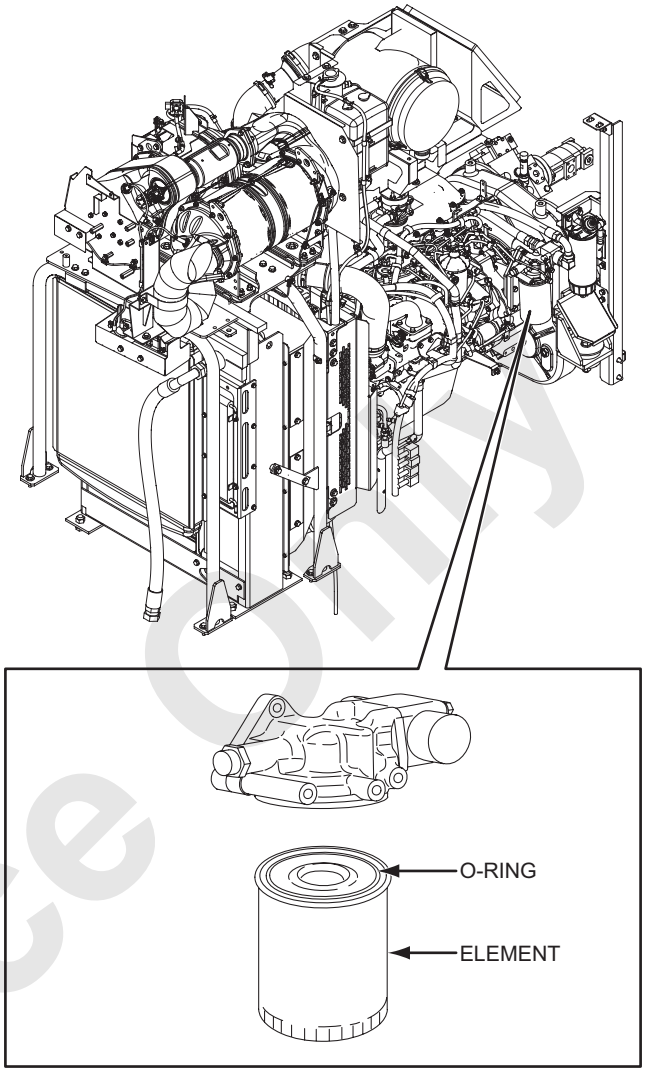

Reference Only

(3) Remove the dirt or mud adhered to the seal face of the oil filter body.
(4) Apply the engine oil on the gasket of the new element and rotate it lightly to right until it touches the body seal face.

⚠ CAUTION

- **Replace O-rings with new one which included in the element kit.**
- **Be careful not to damage the O-rings by twisting.**
  Check to see if the O-rings firmly contact to the sealing surface.
  Failure to observe this precaution may lead to damage the parts.

(5) Under this condition, rotate the element for about 3/4 to 1 turn with the oil filter wrench supplied as special tool.
(6) After the element is replaced, start the engine and make the element filled with oil and then check the engine oil level.

⚠ WARNING

- **After the element is replaced, start engine and make sure that there is no oil leaks around the filter.**
  Failure to observe this precaution may result in a serious accident.
- **If fuel or hydraulic oil leak is observed, repair leak and remove adhered fuel/oil immediately.**
  Failure to observe this precaution may result in a serious accident.

Reference Only

8. REPLACING FUEL FILTER

- **Removing fuel filter element**

(1) Prepare the container to receive the drained fuel under the drain valve.
(2) Loosen the drain valve and air bleed plug and drain the fuel accumulated in the fuel filter element.
(3) Remove the element from the filter body together with a cup by the filter wrench.
(4) Remove the element from the cup by the filter wrench or the pipe wrench.
The cup to be reused, therefore, it is not damaged or throw it away.

Name	Part number
Filter wrench	
Pipe wrench	

Accessory of machine tool :
"Refer to 7.13 CONSUMABLE PARTS LIST"

WARNING

The drained water contains the fuel.
Dispose them by following the rule specified by regional authority office.

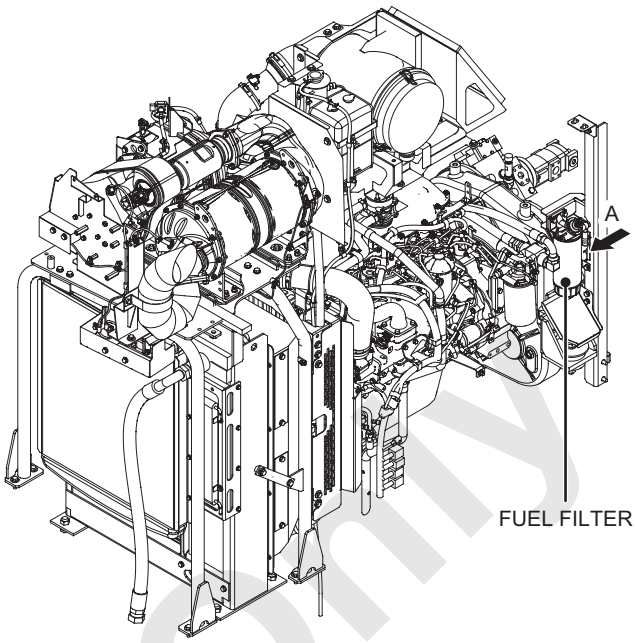

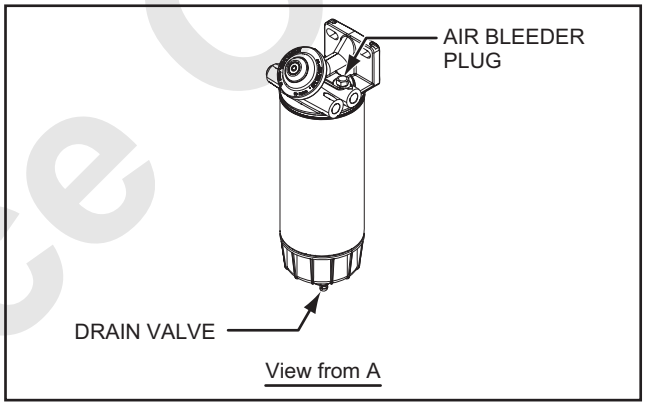

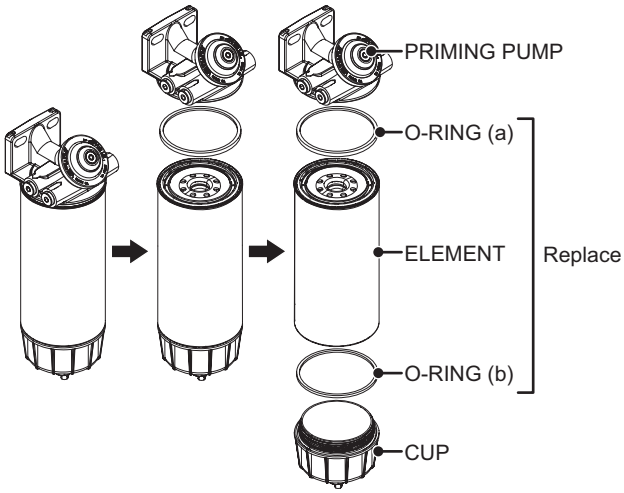

Reference Only

- **Installing the fuel filter element**

(1) Remove the dirt or foreign material adhered to the installation surface.
(2) Slightly coat the fuel to the new O-ring and install it to the sealing surface of cup.

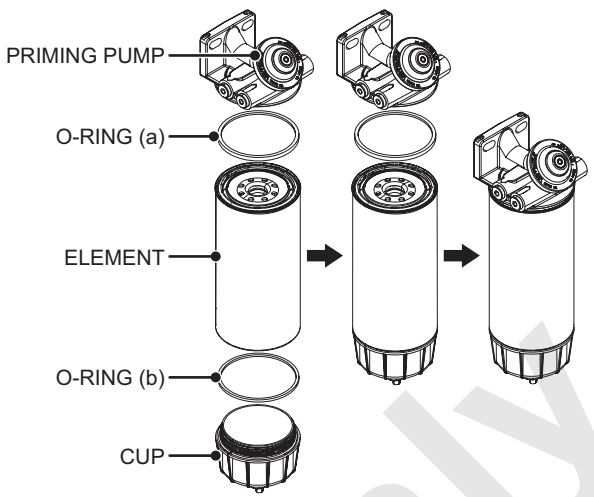

⚠ CAUTION

- **Do not reuse the element.**
  Replace with new one.
  Failure to observe this precaution may lead to damage the parts.
- **Replace O-rings with new one which included in the element kit.**
- **Be careful not to damage the O-rings by twisting.**
  Check to see if the O-rings firmly contact to the sealing surface.
  Failure to observe this precaution may lead to damage the parts.

(3) Install by turning the cup approximate 1/2 to 3/4 of rotation after the O-ring (b) contacts with new element.

Tightening torque

Cup	9 to 11.3 N·m (6.6 to 8.3 ft·lbs)

* Do not use tools. Hand-tighten.

(4) Install by turning the element approximate 1/2 of rotation after the O-ring (a) contacts with priming pump housing.

Tightening torque

Element	9 to 11.3 N·m (6.6 to 8.3 ft·lbs)

* Do not use tools. Hand-tighten.

(5) Tighten the drain valve.

Tightening torque

Drain valve	4 to 6 N·m (3 to 4.4 ft·lbs)

Reference Only

(6) Start the priming pump and bleed air in the system.

As to air bleeding, refer to the 18. FUEL FILTER P.7-30.

CAUTION

Make sure that the air bleed plug is loose.

Reference Only

9. REPLACING OF HYDRAULIC OIL TANK RETURN FILTERS

WARNING

Right after stop the engine, the oils and cooling water of the machine may be extremely hot and may cause scald.
Inspection, replacement, draining and replenishment are to be carry out after cool down.
Failure to observe this precaution may result in a serious injury.

- **Procedure of replacing the return filter**

  Remove the filter cover and replace the element and O-ring with new ones.

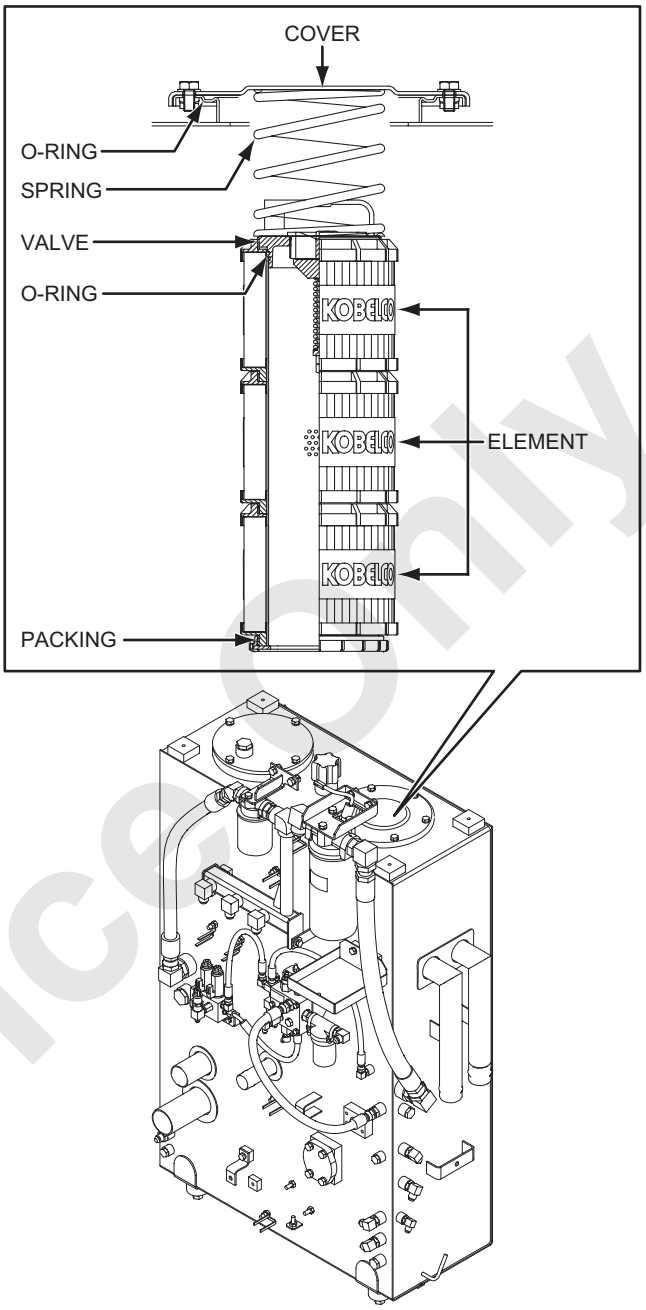

(1) Remove the filter assembly and place it on the flat surface.

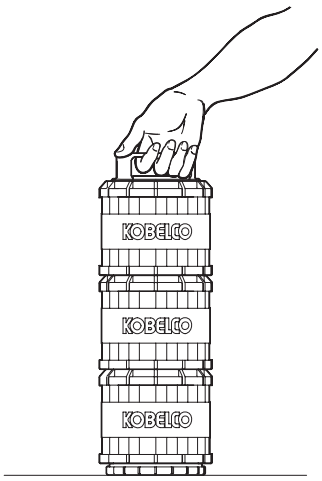

Reference Only

(2) Hold the top mold plate and loosen the grip.

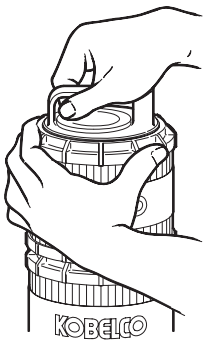

(3) Pull out the grip assembly.

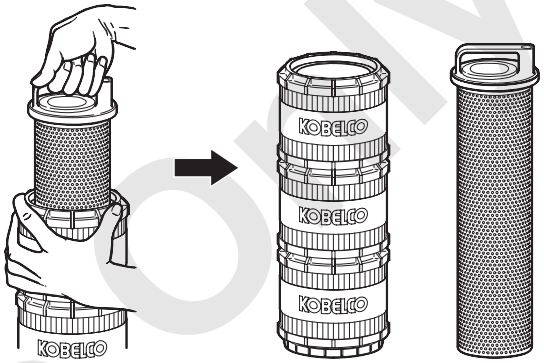

(4) Turn over the filter.

(5) Hold the plate on which the end plate is attached.
(6) Loosen the end plate and replace the packing of the end plate with new one.

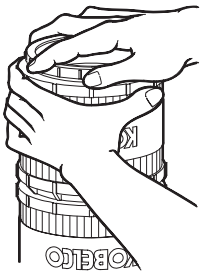

Reference Only

(7) This is to complete the disassembly.
To assemble, take the reverse way.

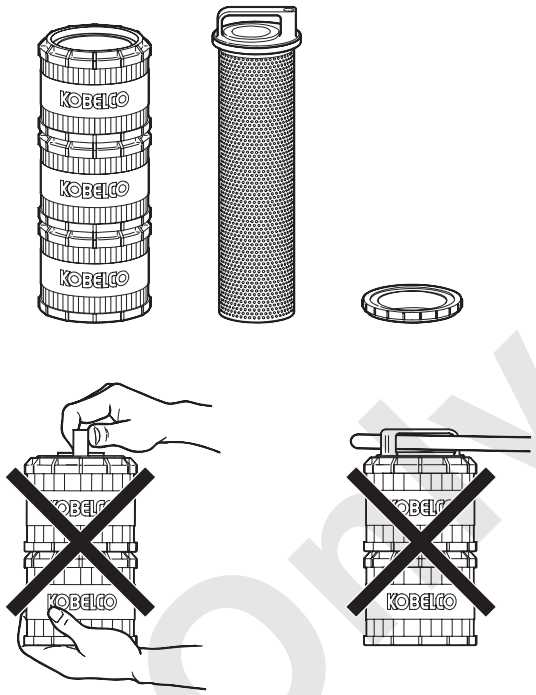

CAUTION

Do not rotate with holding the grip and element lower portion at installation and dismantle.
This may result in excessive force by twisting and may lead to damage the element and gasket.
Failure to observe this precaution may lead to parts damage.

Reference Only

10. WASHING OF LINE FILTER (a)
11. WASHING OF LINE FILTER (b)

Remove the case, take out the filter and sufficiently wash it.
Replace the O-ring with a new one.

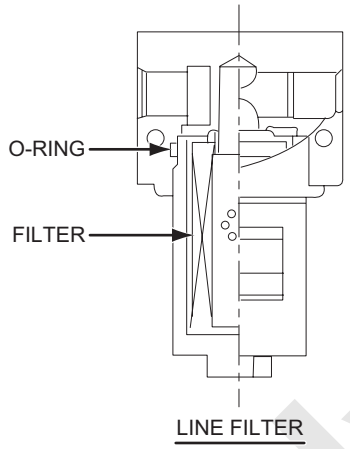

WARNING

After stopping engine, wait for five minutes to release pressure.

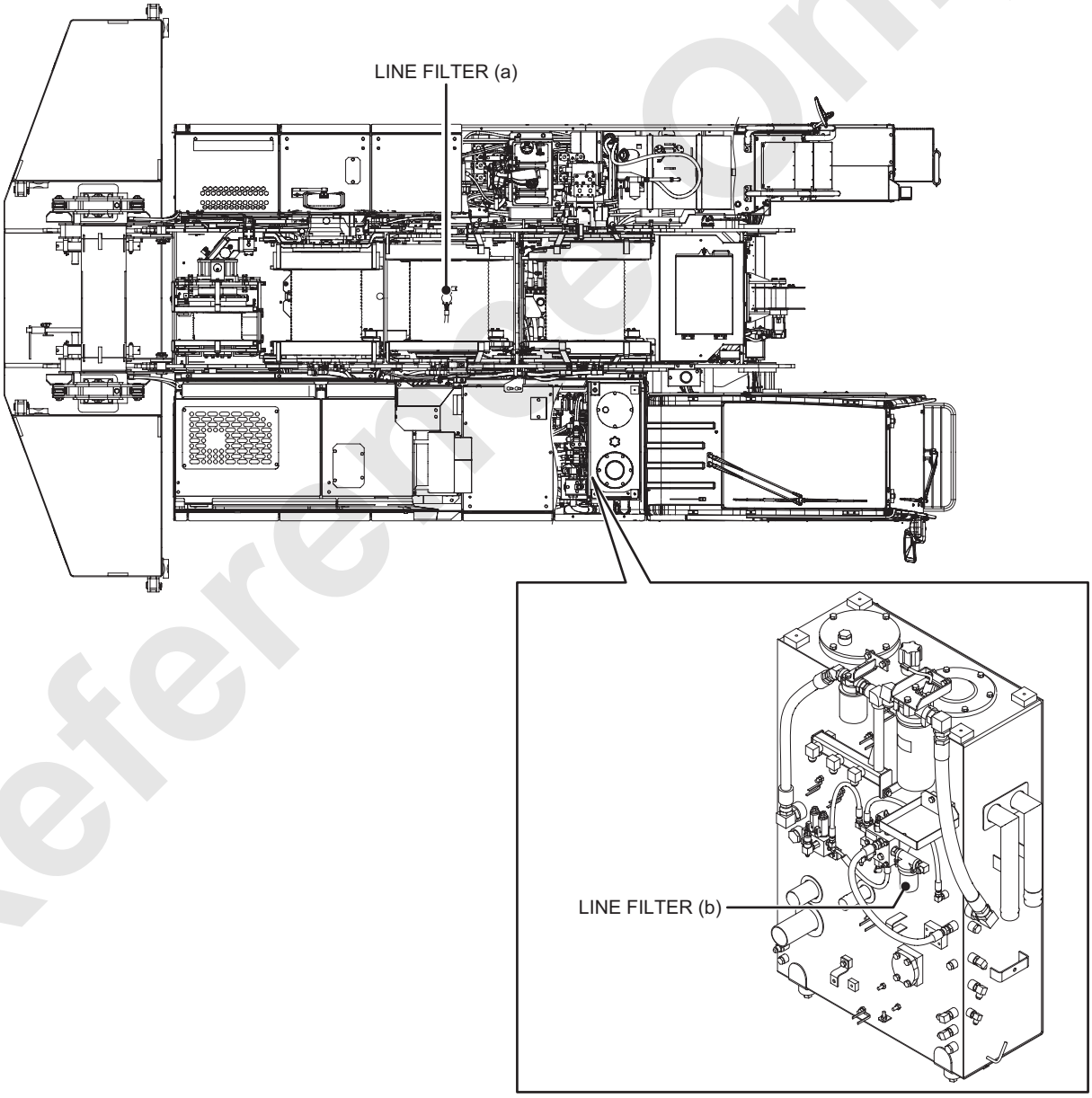

Reference Only

12. REPLACING OF AIR ELEMENT

If the element is exceptionally dirty and the element is deformed, replace the element with a new one early.

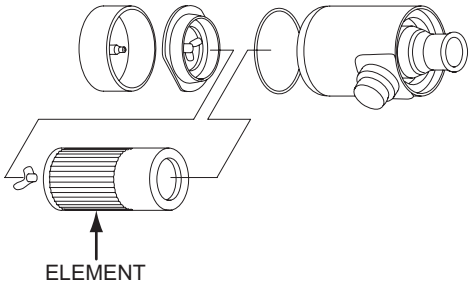

13. REPLACING HYDRAULIC OIL SUCTION FILTER

Remove the filter cover and replace the element and O-ring.
Perform this replacement when replacing the hydraulic oil.

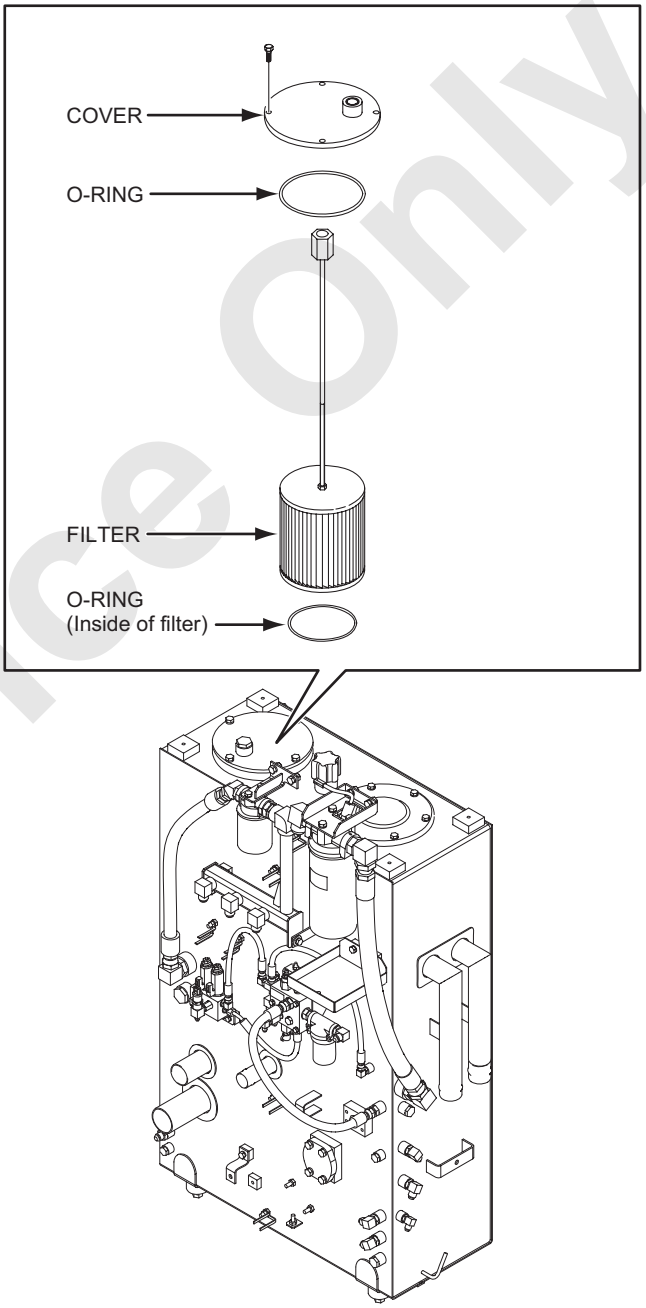

Reference Only

14. WASHING FILL PORT STRAINER

Remove the air breather cap, take out the fill port strainer, and sufficiently wash it with washing liquid.

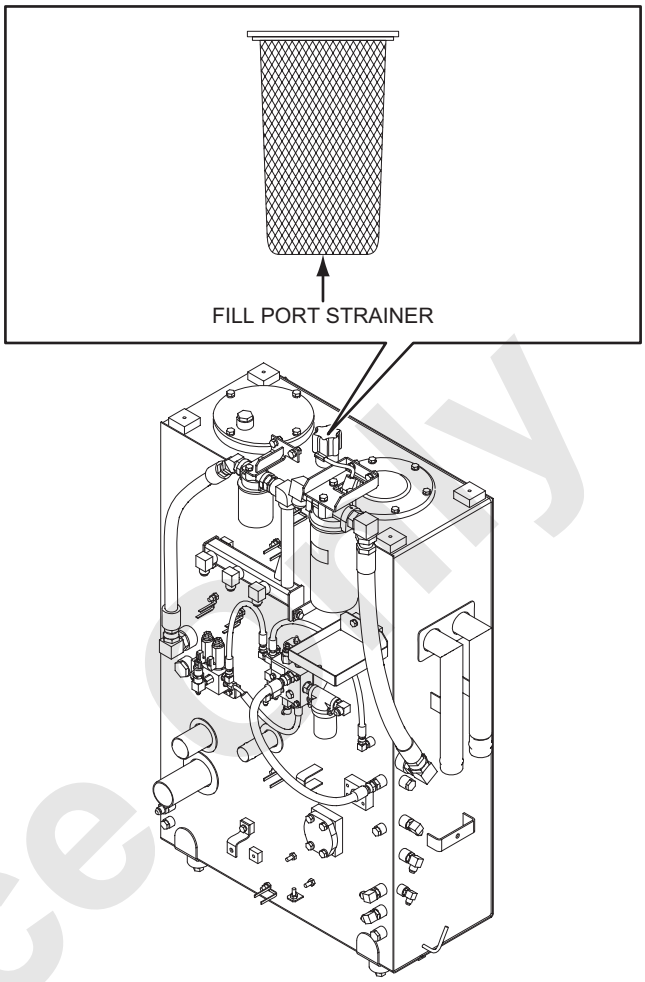

Reference only

15. REPLACING FUEL FILTER (ON ENGINE)

The fuel filter is an element type.
Its purpose is to remove moisture and fine dirt particles from the fuel, the element is made from resin and paper.

- **Draining of fuel**

(1) Clean the area around the fuel filter before the start of work.
Otherwise dirt may enter.
(2) Provide a waste oil container under the fuel filter.
(3) After loosening the drain plug, loosen the air bleeder plug and drain the fuel from the drain pipe.
Use a drain hose (fuel) which is provided as an attached tool.

* At this time, drain all fuel from the filter.
When the element is replaced without draining all of the fuel, unfiltered fuel may remain inside the filter and later flow to the engine.

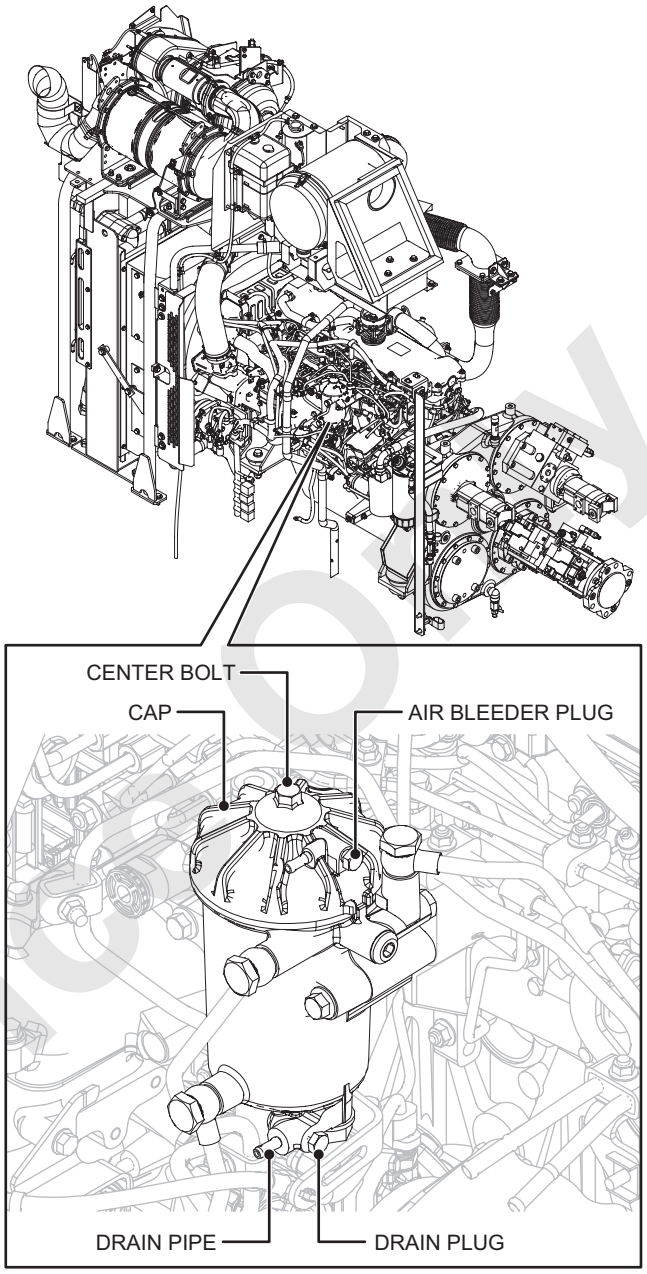

WARNING

- **Carefully wipe off any fuel splashed on to the engine or its parts.**
Otherwise it may cause of fire.
Failure to observe this precaution may result in a serious accident.
- **Keep away flammable from the fuel to prevent an ignition and explosion.**
Failure to observe this precaution may result in serious injuries, property damage or loss of life.
- **Place the container under the drain port and collect all of drained oil for safety and not to pollute the ground.**

(4) Confirm that no more fuel flows from the drain pipe and then tighten the drain plug.

Tightening torque

Drain plug	4.9 to 8.9 N·m (3.6 to 6.6 ft·lbs)

Reference Only

- **Removing the fuel filter element**

  Loosen the center bolt, remove the cap, and then remove the element.

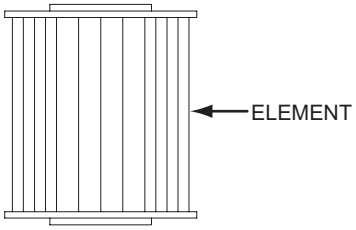

- **Installing the fuel filter element**

(1) After replacing the element by a new one, install the cap and tighten the center bolt and the air bleeder plug.

Tightening torque

Center bolt	24.5 to 34.3 N·m (18.1 to 25.3 ft·lbs)
Air bleeder plug	4.9 to 8.9 N·m (3.6 to 6.6 ft·lbs)

CAUTION

- **Do not reuse the element.**
  Replace with new one.
  Failure to observe this precaution may lead to damage the parts.
- **Replace with a new gasket provided in the element kit.**

(2) After installation, bleed the air from the fuel system.

WARNING

- **After the element is replaced, start engine and make sure that there is no oil leaks around the filter.**
  Failure to observe this precaution may result in a serious accident.
- **If fuel or hydraulic oil leak is observed, repair leak and remove adhered fuel/oil immediately.**
  Failure to observe this precaution may result in a serious accident.

* Refer to P.7-30 for bleeding air from the fuel system.

Reference Only

16. REPLACING DEF/AdBlue® SUPPLY MODULE FILTER

When DEF/AdBlue® becomes dry, it will be crystallized and change to white powder.
If you find any crystallized DEF/AdBlue® on the surface of DEF/AdBlue® tank, wipe it away thoroughly with clean cloth.

When open the filter cap of DEF/AdBlue® tank, don't get close your face to the DEF/AdBlue® and/or smell it. DEF/AdBlue® may smell when getting warm.

Observe strictly followings to keep customer's safety and appropriate function of SCR system.

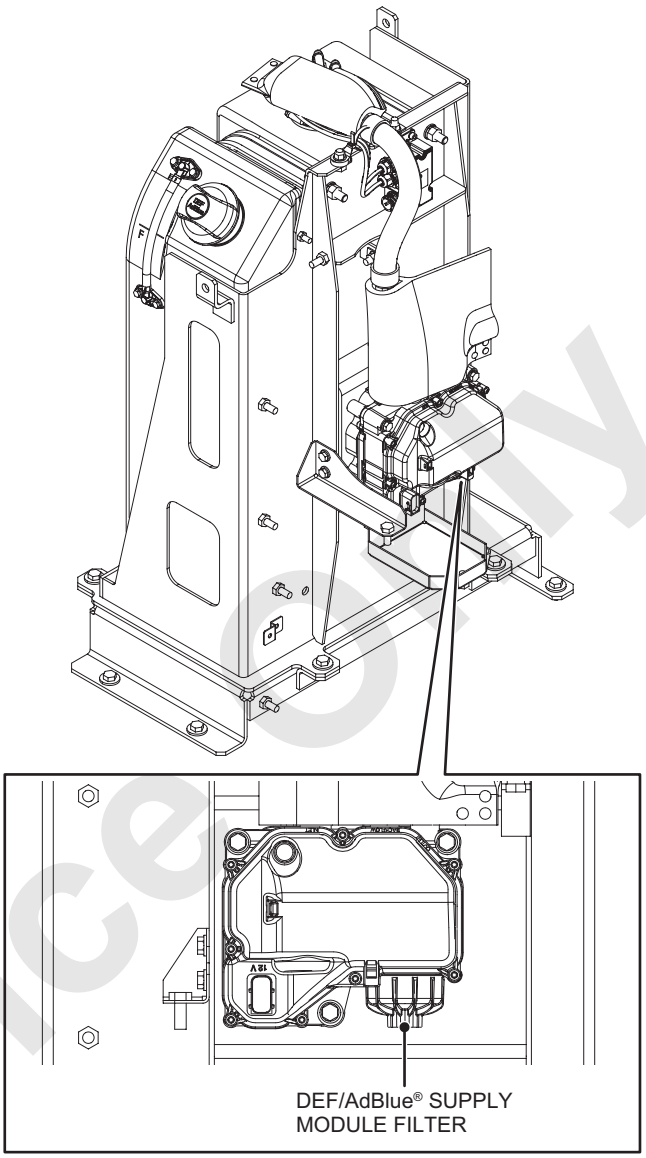

WARNING

Dispose the DEF/AdBlue® as industrial wastes and strictly follow the regulations/provisions specified by regional authority.

WARNING

Use the DEF/AdBlue® only for the purpose of reduction NOx emission.
Operate this machine without use of DEF/AdBlue®, you may be punished.

WARNING

The parts related with SCR system genuine parts are mandatory, contact authorized Manitowoc distributor for replace parts or repair.

WARNING

Don't apply any modification, relocation to related parts as DEF/AdBlue® tank, DEF/AdBlue® supply module, DEF/AdBlue® dosing module and DEF/AdBlue® lines.

Reference Only

- **Dismantle of DEF/AdBlue® supply module filter**

(1) Turn filter cover counterclockwise and detach the DEF/AdBlue® supply module.
Spanner size : 27 mm (1-2/32 in.)

(2) Confirm if any defects as crack etc. are existed on the filter cover. If the defects are existing, replace filter cover is mandatory.

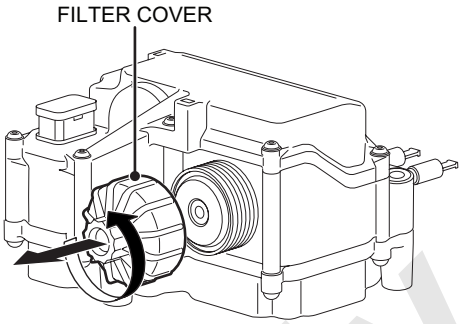

⚠ CAUTION

In order to have any stain and damage, wipe adhesive dust away thoroughly from the sealing surface of housing.

⚠ CAUTION

When open the filter cover, DEF/AdBlue® will spill over.
Prepare the container and waste cloths in advance to receive spilled out DEF/AdBlue® and wipe them off.

(3) Take out an element from the DEF/AdBlue® supply module.

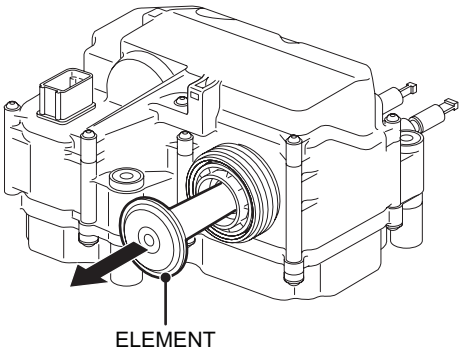

⚠ CAUTION

When detach the element, squeezing with screw driver etc. may cause DEF/AdBlue® supply module may be damaged and resulted DEF/AdBlue® may be leaked. Handle with care gentry.

(4) Check the color in the filter visually.
(Black or gray)

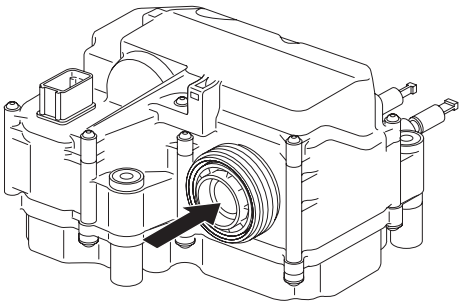

(5) According with the color in the filter, select the direction of filter removal tool.

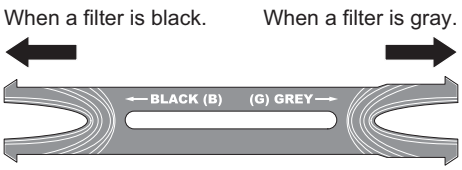

Reference Only

(6) Detach the filter with the filter removal tool from the DEF/AdBlue® supply module.

(7) Confirm if any defects as crack etc. are existed on the housing.
If the defects are existing, replace DEF/AdBlue® supply module is mandatory.

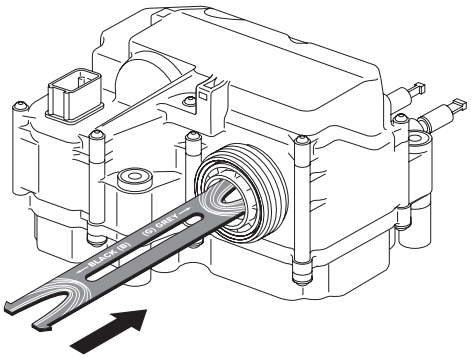

CAUTION

In order to have any stain and damage, wipe adhesive dust away thoroughly from the sealing surface of housing.

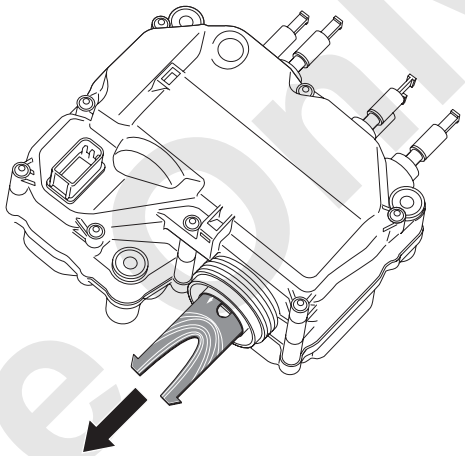

(8) Coat the oil slightly to O-ring and install new filter and element.
Oil to be coated is Mobile berocite No. 6 or equivalent.

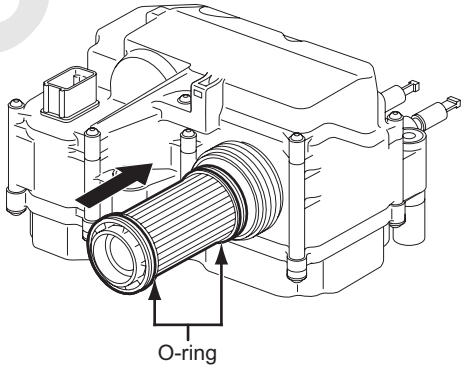

(9) Install the filter cover.
Spanner size : 27 mm (1-2/32 in.)
Tightening torque : 20 to 25 N·m (14.8 to 18.4 ft·lbs)

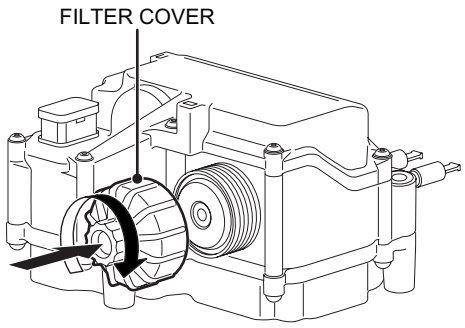

Reference Only

17. CLEANING OR REPLACING DIESEL PARTICULATE FILTER

It is necessary to clean or replace the diesel particulate filter under the specified inspection interval.
Contact the nearest Manitowoc service shop to carry out cleaning or replacement.

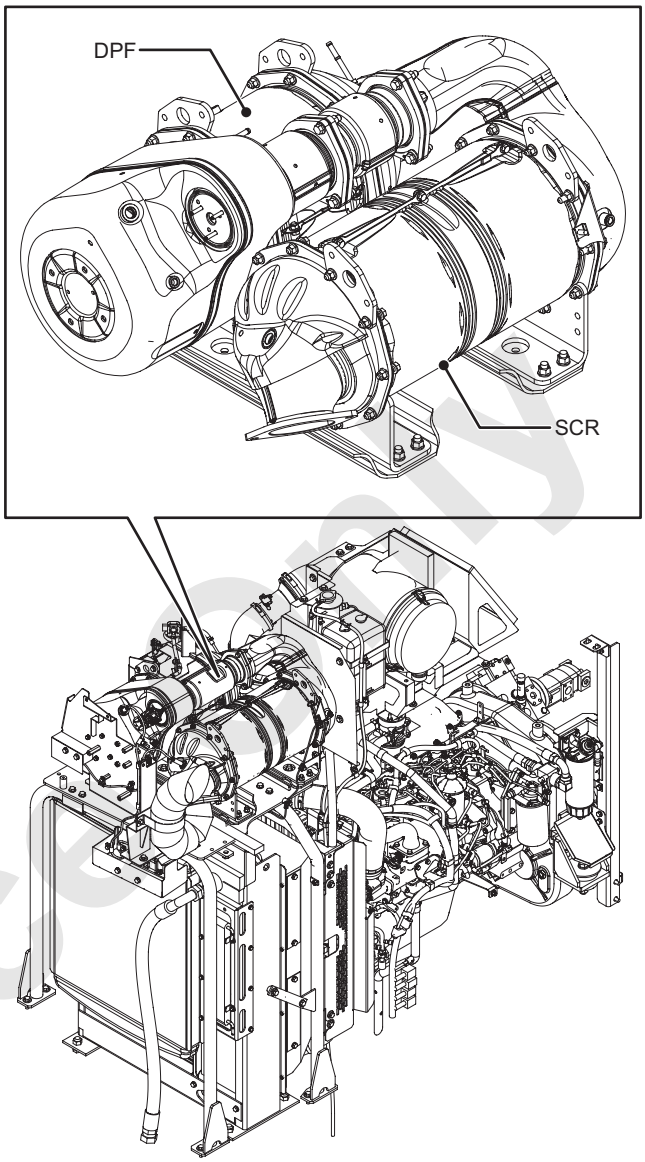

Reference Only

7.5 BATTERY INSPECTION

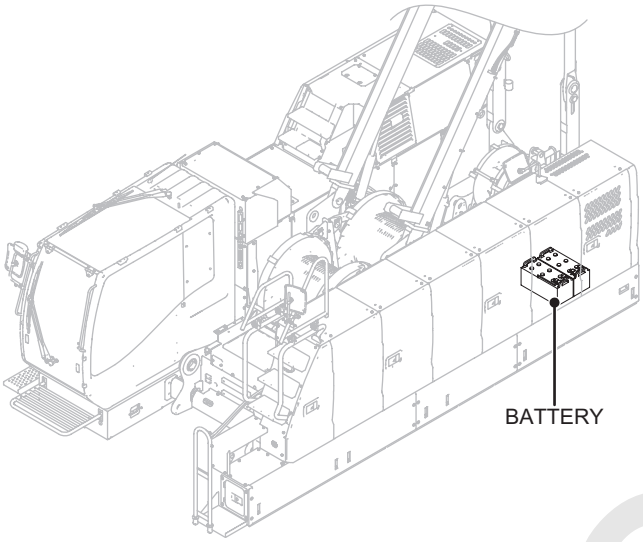

Check interval	Check item
Monthly or every 100 hours	1. CHECKING BATTERY ELECTROLYTE LEVEL
As required	2. CHECKING CHARGE CONDITION
	3. CHANGING BATTERY
	4. USING BOOSTER CABLES

Reference Only

1. CHECKING BATTERY ELECTROLYTE LEVEL

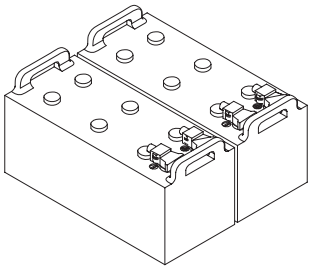

If the battery electrolyte level is up to 10 mm (13/32 in.) above the plates, it is normal.
If insufficient, add distilled water.

(1) Checking the battery electrolyte level from the side level line :

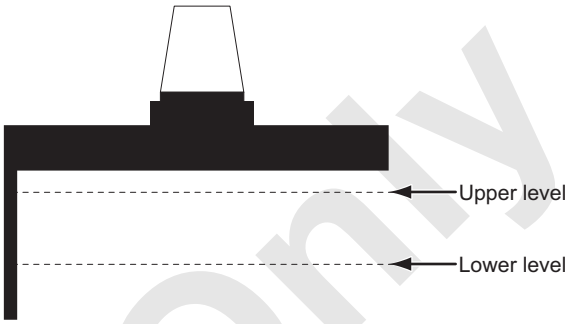

Clean around the level lines with a wet cloth, and make sure that the electrolyte level is between the upper level and the lower level.
When the electrolyte level is lower than the level halfway between the upper level and the lower level, add battery electrolyte.
After replenishment, securely tighten the plug.

DANGER

NEVER clean the battery with a dry cloth.
Otherwise, static electricity occurs, leading to combustion and explosion.
Failure to observe this precaution may result in a serious injury or loss of life.

Reference Only

(2) When you cannot check the battery electrolyte level from the side level line, or no level lines are provided on the side of the battery :

Detach the plug at the top of the battery, and check the battery electrolyte level from the filling port.
If the electrolyte level is lower than the sleeve, add battery electrolyte to the bottom of the sleeve.

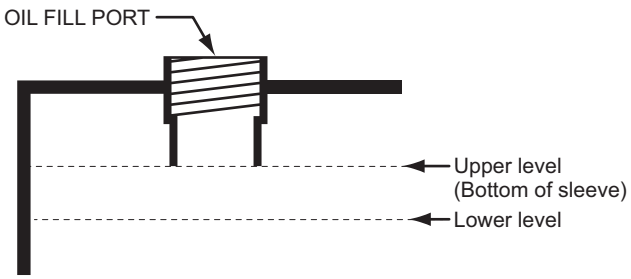

Sufficiently replenished

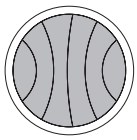 Liquid level is reached to the sleeve bottom	When the electrolyte level reaches the bottom of the sleeve, the electrolyte surface is swelled by surface tension, and the pole plates seen to be warp.

Insufficiently replenished

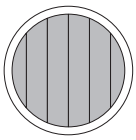 Liquid level is not reached to the sleeve bottom	When the electrolyte level does not reach the bottom of the sleeve, the pole plates seen to be straight.

⚠ WARNING

- **The battery generates the flammable hydrogen gas, keep away flammable to prevent an ignition and explosion.**
  Failure to observe this precaution may result in serious injuries, property damage or loss of life.
- **Do not put the tools or the likes on or near the battery to avoid any sparks.**
  Failure to observe this precaution may result in serious injuries, property damage or loss of life.
- **If the handling of booster cable is incorrect may cause battery explosion.**
  Ensure to take correct handling and not to made mistake of ⊕ terminal and ⊖ terminal.
  Failure to observe this precaution may result in serious injuries, property damage or loss of life.

Reference Only

2. CHECKING CHARGE CONDITION

The charge condition is judged by measuring the specific gravity of the battery electrolyte.
The normal specific gravity is 1.25 to 1.27 at 20°C (68°F) of electrolyte temperature.
If the specific gravity is lower than 1.25, charge the battery.
If the battery is not used for a long time, remove the battery from the machine and store it in a cold and dark place.

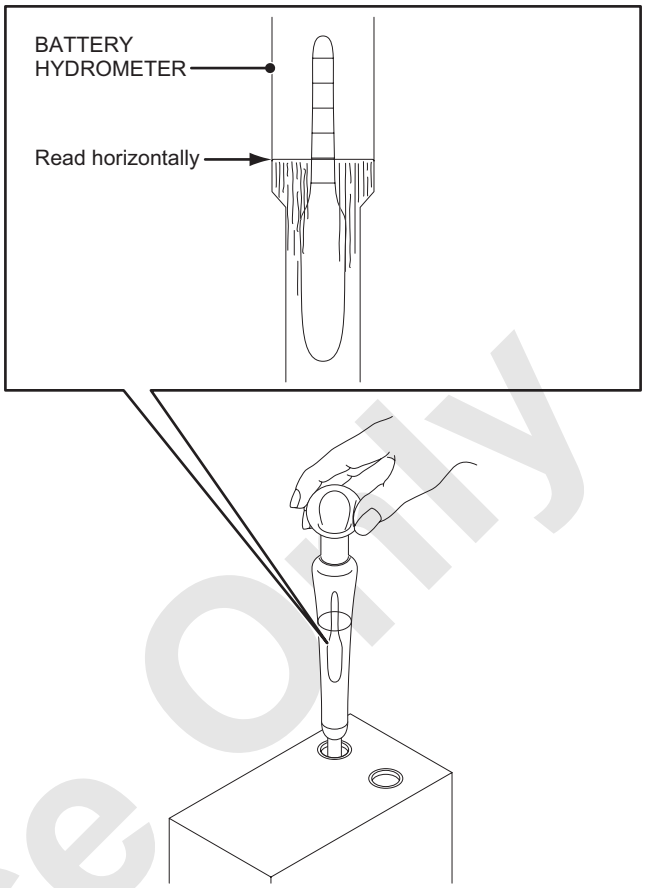

WARNING

Do not short across the battery terminals to check charging condition.
Failure to observe this precaution may result in a serious injury or loss of life.

3. CHANGING BATTERY

(1) Place the machinery on the horizontal place and stop the engine.
(2) When changing to new battery, make sure to change two batteries as one set.
(3) When removing the battery cable, make sure to remove the earth side cable (⊖ side terminal) first.
(4) After installed, put the red and black battery terminal covers.

Reference Only

4. USING BOOSTER CABLES

When the battery is discharged and booster machine battery is to be connected with the booster cables to start the engine, observe the following procedure.

WARNING

- **The battery generates the flammable hydrogen gas, keep away flammable to prevent an ignition and explosion.**
  Failure to observe this precaution may result in serious injuries, property damage or loss of life.
- **Do not put the tools or the likes on or near the battery to avoid any sparks.**
  Failure to observe this precaution may result in serious injuries, property damage or loss of life.
- **Place the machine and booster machine on dry soil or concrete.**
  Placing on the steel plate makes machine grounded condition and may cause unexpected spark.
  Failure to observe this precaution may result in serious injuries, property damage or loss of life.
- **If the handling of booster cable is incorrect may cause battery explosion.**
  Ensure to take correct handling and not to made mistake of ⊕ terminal and ⊖ terminal.
  Failure to observe this precaution may result in serious injuries, property damage or loss of life.
- **Do not use or charge the battery when the battery fluid level is lower than limit level.**
  This may cause battery explosion.
  Failure to observe this precaution may result in serious injuries, property damage or loss of life.

CAUTION

This machine has a DC24 V system.
Ensure to use a DC24 V booster machine with enough capacity to starting the engine.

Reference Only

- **Connecting the booster cables**

(1) Stop the booster machine engine.
(2) Connect one end of the booster cable (a : red) to the battery ⊕ terminal of this machine and the other end to the battery terminal ⊕ of the booster machine.
(3) Connect one end of the other booster cable (b : black) to the battery ⊖ terminal of the booster machine and the other end to the swing frame of this machine.
Since at the last connection, sparking will occur, connect it separating from the battery as much as possible.
(4) Make sure for connection and then start the booster machine engine.
(5) Start this machine engine.
(6) After the engine is started, remove the booster cable (b : black) and (a : red) in this order in the following procedure which is reverse way to the connection.

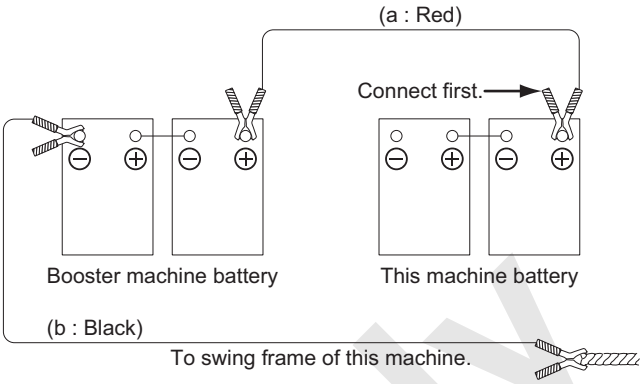

Booster cable connection

- **Removing the booster cable**

(1) Remove the booster cable (b : black) which is connected to the swing frame of this machine.
(2) Remove the booster cable (b : black) which is connected to the ⊖ terminal of the booster machine.
(3) Remove the booster cable (a : red) which is connected to ⊕ terminal of the booster machine.
(4) Remove the booster cable (a : red) which is connected to ⊕ terminal of this machine.
(5) Put the red and black battery terminal covers as the last step.

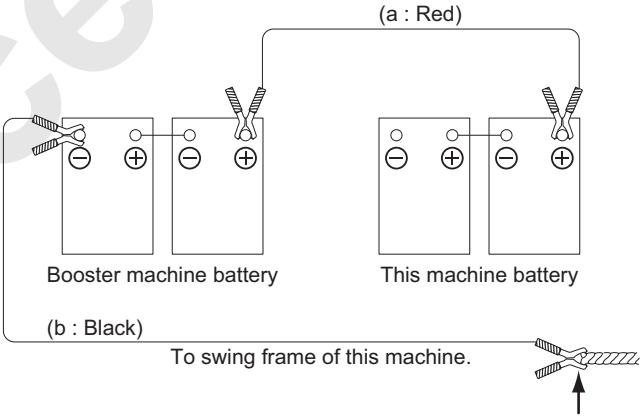

Booster cable removal

Reference Only

7.6 LOCATION AND USE OF FUSE

While lifting two locks on the side face of the fuse box, open the cover.
Cover will not open unless the locks are completely unlocked.

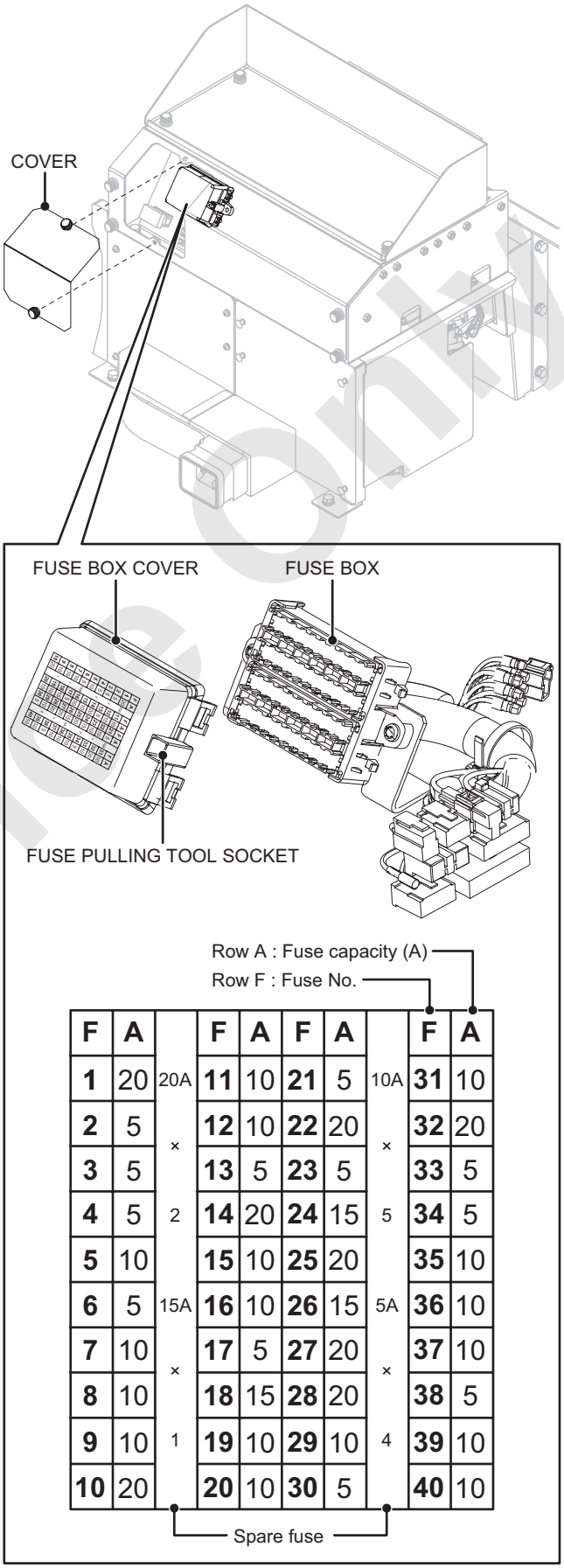

F	A		F	A	F	A		F	A
1	20	20A	11	10	21	5	10A	31	10
2	5	×	12	10	22	20	×	32	20
3	5		13	5	23	5		33	5
4	5	2	14	20	24	15	5	34	5
5	10		15	10	25	20		35	10
6	5	15A	16	10	26	15	5A	36	10
7	10	×	17	5	27	20	×	37	10
8	10		18	15	28	20		38	5
9	10	1	19	10	29	10	4	39	10
10	20		20	10	30	5		40	10

Reference Only

CLASSIFICATION OF FUSE USE

Fuse No.	Capacity	Line No.	Use
F1	20A	1A - 11	Main power supply, Work light
F2	5A	4-12	Sub battery voltage monitor
F3	5A	1B - 13	IT controller
F4	5A	1B - 14	Back-up (M/L, MC1, MC2, Radio)
F5	10A	2F - 15	Bypass circuit
F6	5A	2F - 16	Release circuit
F7	10A	2F - 17	Control power (M/L)
F8	10A	2F - 18	Output power (M/L)
F9	10A	2F - 19	Control power (MC1)
F10	20A	2F - 20	Output power (MC1)
F11	10A	2F - 21	Auto-stop
F12	10A	2F - 22	Engine condition
F13	5A	84 - 23	Radio, One-way call
F14	20A	2G - 24	Wiper
F15	10A	2G - 25	Function lock
F16	10A	2G - 26	Remo-con
F17	5A	2G - 27	Monitor
F18	15A	2E - 28	Air conditioner
F19	10A	2E - 29	Air conditioner 2
F20	10A	2E - 30	Fun motor
F21	5A	51 - 31	Generation detect
F22	20A	IC - 32	DCU
F23	5A	IE - 33	ECU (BATT)
F24	15A	2J - 34	ECU (+BF)
F25	20A	2J - 35	ECU (+B)
F26	15A	2J - 36	Spare
F27	20A	2I - 37	DC motor 1 for oil cooler
F28	20A	2I - 38	DC motor 2 for oil cooler
F29	10A	2I - 39	Swing flasher, Voice alarm
F30	5A	54 - 40	Starter
F31	10A	2H - 41	Control power (MC2)
F32	20A	2H - 42	Output power (MC2)
F33	5A	2H - 43	Solenoid valve (Confluence/independent)
F34	5A	2H - 44	Overhoist limit switch
F35	10A	2H - 45	Fuel pump, Cigarette lighter
F36	10A	2K - 46	Relay
F37	10A	2K - 47	Relay
F38	5A	2K - 48	Free fall
F39	10A	2K - 49	Light
F40	10A	2K -	Spare

Reference Only

7.7 OPERATION UNDER SEVERE CONDITIONS

OPERATION IN EXTREME COLD

- **Engine oil**

Atmospheric temperature when engine starting	40°C to 0°C (104°F to 32°F)	10°C to -30°C (50°F to -22°F)	40°C to -30°C (104°F to -22°F)
Viscosity of oil	SAE 30	SAE 10W	SAE 10W-30

* Use engine oil suitable to the atmosphere temperature. (JASO DH-2, API CJ-4, ACEA E-6, E-9)

CAUTION

- **Do not mix with different brand of oil and use of same brand of oil.**
- **In order to keep good function of the emission control devices, it is recommended to use the specified brand (recommended) engine oil.**

- **Fuel**
  Before starting work, drain water.
  After the work is finished, fill the tank as full as possible.

Ambient temp.	Type
-5°C (23°F) or more	JIS 2 light oil
-5°C to -15°C (23°F to 5°F)	JIS 3 light oil
-15°C (5°F) or less	JIS 3 special light oil

* Use engine oil suitable to the atmosphere temperature.

WARNING

- **Use ultra-low sulfur diesel fuel only (S50 : sulfur content lower than 50 ppm).**
  (For the cold region, use suitable low sulfur fuel in the area.)
  Confirm again if it is the proper type of fuel before refilling.
  Failure to observe this precaution may result of adverse effect to the environmental and white smoke.
- **If fuel other than specified one is used, adverse effect may be caused to the engine or emission control device and white smoke or failure may be resulted.**

Reference Only

- **Coolant**

Capacity of coolant : 30 L (7.9 gal)

Atmospheric temperature : °C (°F)	Volume of Cooling water : L (gal)	Volume of LLC : L (gal)	LLC ratio
-17 (1.4)	21 (5.5)	9 (2.4)	30%
-21 (-5.8)	19 (5.0)	11 (2.9)	35%
-25 (-13)	18 (4.8)	12 (3.2)	40%
-31 (-23.8)	16 (4.2)	14 (3.7)	45%
-40 (-40)	15 (4.0)	15 (4.0)	50%

* Combine antifreeze (long life coolant) according to the atmospheric temperature.

⚠ CAUTION

Sometimes, combination rate may be different depending upon brands.

- **Battery**
  Sufficiently charge the battery.
  (Maintain the specific gravity more 1.22.)

⚠ CAUTION

There is a possibility of freezing if the battery is not enough charged.
After the distilled water has been filled, run the engine and mixed water and electrolyte.

Reference Only

OPERATION IN EXTREME HOT

- **Engine oil**

Atmospheric temperature when engine starting	40°C (104°F) or more	40°C to 0°C (104°F to 32°F)
Viscosity of oil	SAE 40	SAE 30

* Use engine oil suitable to the atmospheric temperature. (JASO DH-2, API CJ-4, ACEA E-6, E-9)

⚠ CAUTION

- **Do not mix with different brand of oil and use of same brand of oil.**
- **In order to keep good function of the emission control devices, it is recommended to use the specified brand (recommended) engine oil.**

- **Coolant**
  Use of long life coolant compounding ratio of 30%.

- **Battery**
  Always maintain the electrolyte level 10 mm (13/32 in.) above the plates.

OPERATION IN DUSTY PLACE

- **Air cleaner**
  Perform washing and change of the element early.

- **Radiator, oil cooler**
  Early clean the core not to allow dust to clog the core.

- **Filter, element**
  Early replace with new ones.

- **Engine oil**
  Early change oil.

- **Swing bearing ring gear**
  Early lubricate.

- **Wire rope**
  Early clean and lubricate.

Reference Only

OPERATION IN SEASIDE

- **Lubrication**
  Thoroughly and carefully lubricate each point. Lubricate connector sections not equipped with grease fittings.

- **Basic machine**
  Sufficiently wash the basic machine, radiator and oil cooler to wash salt off.

Reference Only

7.8 HANDLING OF DIESEL PARTICULATE FILTER

Diesel particulate filter system burns soot automatically in the cleaning mode when the filter collected soot is accumulated to certain level.
In order to prevent failure of diesel particulate filter, observe the following points.
(* Soot accumulation time and burning time may vary depending on work condition.)

What is the diesel particulate filter

When the soot accumulated in the cleaner of the diesel particulate filter reaches a certain level, the unit starts burning process (regeneration).
With this, the cleaning capacity of the diesel particulate filter is kept to a satisfactory level.
In addition, with using the high performance catalyst and common-rail fuel injection system, it becomes possible to burn (regenerate) soot during the crane work.

- Do not use fuel other than specified one.

WARNING

- **Use ultra-low sulfur diesel fuel only (S50 : sulfur content lower than 50 ppm).**
  (For the cold region, use suitable low sulfur fuel in the area.)
  Confirm again if it is the proper type of fuel before refilling.
  Failure to observe this precaution may result of adverse effect to the environmental and white smoke.
- **If fuel other than specified one is used, adverse effect may be caused to the engine or emission control device and white smoke or failure may be resulted.**

Reference Only

- Use recommended engine oil.

⚠ CAUTION

- **Do not mix with different brand of oil and use of same brand of oil.**
- **In order to keep good function of the emission control devices, it is recommended to use the specified brand (recommended) engine oil.**

- Do not modify the tail pipe.

⚠ CAUTION

If the tail pipe direction or length is changed, performance of the exhaust gas recirculate combustion devices would be adversely affected.
Do not modify the tail pipe. Should modification become necessary for a certain reason, contact the authorized Manitowoc distributor.

- Diesel particulate filter burns (regenerates) soot collected automatically.

⚠ CAUTION

Do not park the crane near the place where dry grass or inflammable objects are there.
After the work or during cleaning mode, exhaust pipe area, muffler and exhaust gas become hot. Inflammable object may cause fire.
Hot exhaust gas may also cause burns to personnel.
Failure to observe these precautions may result in a serious injury or loss of properties.

Reference Only

When the diesel particulate filter is working, take care of the following points.

Due to some work conditions, burning (regeneration) of the soot collected in the diesel particulate filter may not be completed.
In such case, “soot burning (regenerate) icon” is indicated on the main monitor.
This is to resume function of the diesel particulate filter and is not a failure.
When “soot burning (regenerate) icon” is indicated on the main monitor, push the soot burning (regenerate) icon to burn soot (regeneration).
If the crane is left idling for long time, idling speed may increase and load valve may actuate to prevent from exhausting white smoke.

The diesel particulate filter may cause increase of engine idling speed and may actuate load valve and lever operation may becomes impossible under the following case.
This is to rise exhaust temperature and to clean the exhaust gas but not a failure.

- When the “soot burning (regenerate) icon” is indicated on the main monitor and the icon is pushed to burns (regenerate) the soot. (Lever work becomes impossible.)
- When it becomes auto-regeneration mode during work. (Lever work becomes possible.)
- If the low exhaust system temperature continues for long time (such as keep the idling longer than 1 hour), and when as manipulate the lever to work, the function will be continued.
  Refer to the article “2. OPERATION” for details.

The diesel particulate filter has the following features.

- Since the exhaust gas is cleaned with the diesel particulate filter, exhaust gas has different smell compared with the conventional machines.
- At machine start, white smoke comes out of the tail pipe.
  This is moisture and is normal.
- During soot burning (regenerating) white smoke may come out from the muffler area.
  This is exhaustion of moisture accumulated around the muffler area and is normal.

Reference Only

7.9 MACHINE STORAGE

1. Short term storage (period of 30 days or less)

- Clean, sufficiently dry, and then carefully lubricate the entire machine.
- Cover the machine to protect it from dust.

2. Long term storage (longer than one month and less than 1 year)

- Clean, sufficiently dry, and then carefully lubricate the entire machine.
- Sufficiently grease the swing bearing ring gear.
- Replace the reduction unit gear oil and hydraulic oil with fresh oil.
- Replace all filters with new ones.
- Remove the battery and store it in a cool and, dark place.
- Apply thin coat of oil to places that are prone to rust.
- Completely drain coolant and post a “No Water” sign.
- Cover the entire machine to protect it from dust.

As for the storage of the engine area, refer to the engine manual (proper operating-long time storage).

Reference Only

7.10 TIGHTENING TORQUE VALUES

1. Unless otherwise specified, torque all metric screws and bolts on this machine to the values shown in the table below.

METRIC COARSE THREAD SCREW (PLATED)

Nominal	Tightening torque : N·m (ft·lbs)				2 face width : mm (in.)
	4T		7T		
	Dry	Lubricated	Dry	Lubricated	
M6	4.6 to 5.6 (3.4 to 4.1)	3.9 to 4.7 (2.9 to 3.5)	10 to 12.2 (7.4 to 9.0)	8.4 to 10.2 (6.2 to 7.5)	10 (13/32)
M8	11.1 to 12.2 (8.2 to 9.0)	9.5 to 10.5 (7.0 to 7.7)	24.4 to 30.1 (18 to 22.2)	20.2 to 24.8 (14.9 to 18.3)	13 (1/2)
M10	22 to 27 (16.2 to 19.9)	18.5 to 22.7 (13.6 to 16.7)	47.6 to 58.2 (35.1 to 42.9)	40.6 to 49.6 (29.9 to 36.6)	17 (11/16)
M12	37.1 to 45.3 (27.4 to 33.4)	32.7 to 39.9 (24.1 to 29.4)	81.0 to 99.2 (59.7 to 73.2)	68.8 to 84.0 (50.7 to 62.0)	19 (3/4)
M14	59.1 to 72.3 (43.6 to 53.3)	50.2 to 61.5 (37.0 to 45.4)	129 to 157 (95.1 to 115.8)	109 to 133 (80.4 to 98.1)	22 (7/8)
M16	90 to 110 (66.4 to 81.1)	75.9 to 92.7 (56.0 to 68.4)	194 to 238 (143 to 176)	163 to 199 (120 to 147)	24 (15/16)
M18	123 to 151 (91 to 111)	105 to 129 (77.4 to 95.1)	274 to 334 (202 to 246)	229 to 281 (169 to 207)	27 (1-1/16)
M20	174 to 212 (128 to 156)	146 to 178 (108 to 131)	379 to 463 (280 to 341)	318 to 388 (235 to 286)	30 (1-3/16)
M22	229 to 281 (169 to 207)	194 to 238 (143 to 176)	503 to 615 (371 to 454)	423 to 517 (312 to 381)	32 (1-1/4)
M24	300 to 366 (221 to 270)	238 to 292 (176 to 215)	643 to 787 (474 to 580)	520 to 636 (384 to 469)	36 (1-7/16)
M27	432 to 528 (319 to 389)	353 to 431 (260 to 318)	943 to 1153 (696 to 850)	768 to 938 (566 to 692)	41 (1-5/8)
M30	591 to 723 (436 to 533)	494 to 604 (364 to 445)	1279 to 1563 (943 to 1153)	1075 to 1315 (793 to 970)	46 (1-13/16)
M33	794 to 970 (586 to 715)	661 to 809 (488 to 597)	1721 to 2101 (1269 to 1550)	1446 to 1768 (1067 to 1304)	50 (1-15/16)
M36	1023 to 1251 (755 to 923)	856 to 1046 (631 to 771)	2205 to 2659 (1626 to 1961)	1843 to 2253 (1359 to 1662)	55 (2-3/16)

Reference Only

METRIC FINE THREAD SCREW (PLATED)

Nominal	Tightening torque : N·m (ft·lbs)				2 face width : mm (in.)
	4T		7T		
	Dry	Lubricated	Dry	Lubricated	
M8	11.6 to 14.2 (8.6 to 10.5)	9.8 to 12 (7.2 to 8.9)	25.6 to 31.2 (18.9 to 23)	21.1 to 25.9 (15.6 to 19.1)	13 (1/2)
M10	22.9 to 28.1 (16.9 to 20.7)	19.4 to 23.8 (14.3 to 17.6)	49.4 to 60.4 (36.4 to 44.5)	42.7 to 51.7 (31.5 to 38.1)	17 (11/16)
M12	40.6 to 49.6 (29.9 to 36.6)	34.4 to 42 (25.4 to 31)	87.3 to 106.7 (64.4 to 78.7)	73.2 to 89.4 (54 to 65.9)	19 (3/4)
M16	94 to 116 (69.3 to 85.6)	79.4 to 97 (58.6 to 71.5)	202 to 248 (149 to 183)	172 to 210 (127 to 155)	24 (15/16)
M20	185 to 227 (136 to 167)	157 to 191 (116 to 141)	406 to 496 (299 to 366)	335 to 409 (247 to 302)	30 (1-3/16)
M24	318 to 388 (235 to 286)	265 to 323 (195 to 238)	688 to 840 (507 to 620)	573 to 701 (423 to 517)	36 (1-7/16)
M30	635 to 777 (468 to 573)	529 to 647 (390 to 477)	1393 to 1703 (1027 to 1256)	1156 to 1412 (853 to 1041)	46 (1-13/16)
M36	1058 to 1294 (780 to 954)	882 to 1078 (651 to 795)	2311 to 2825 (1705 to 2084)	1922 to 2350 (1418 to 1733)	55 (2-3/16)

Reference Only

2. Tightening torque of bolt, nut with special specification are listed below.

- Tightening torque shall be within ±10% of the value in the list.
- Apply LOCTITE #243 or equivalence to the bolts and nuts.
- For maintenance, contact our Manitowoc authorize distributor.

(1) Swing bearing	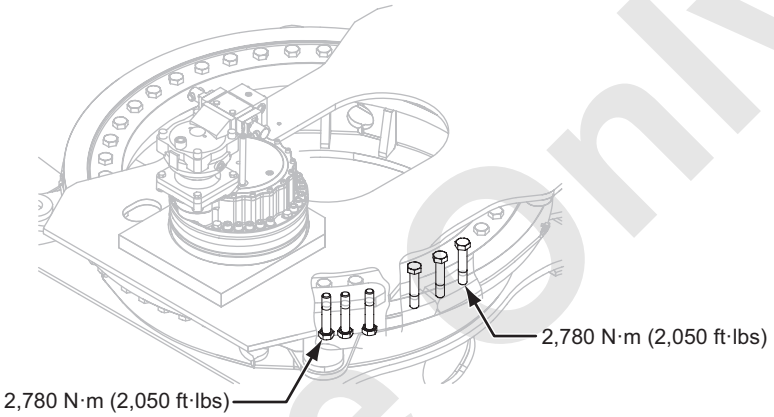
(2) Swing reduction unit	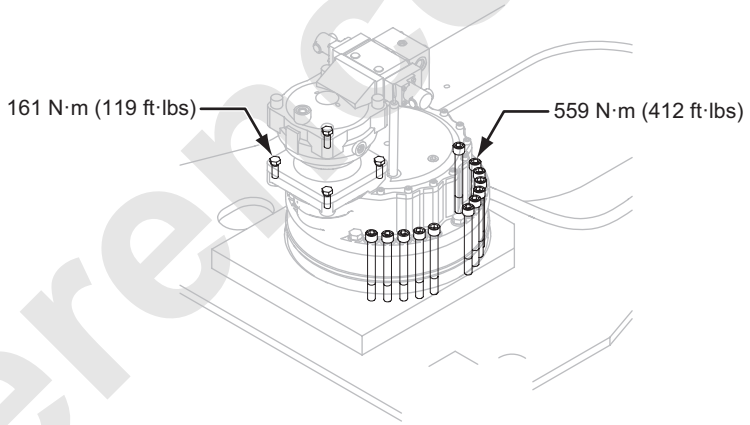

Reference Only

(3) Engine	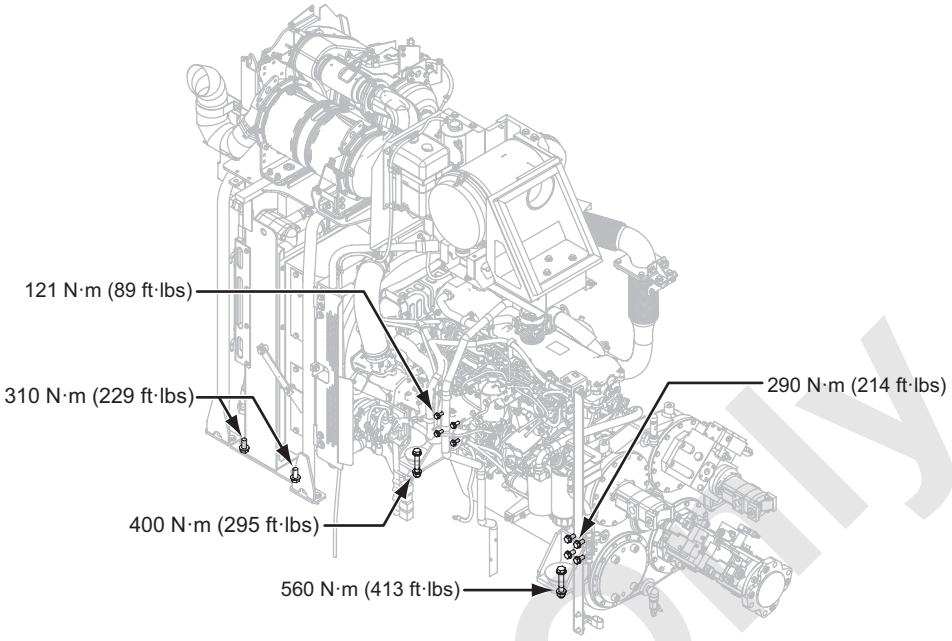
(4) Pump assembly	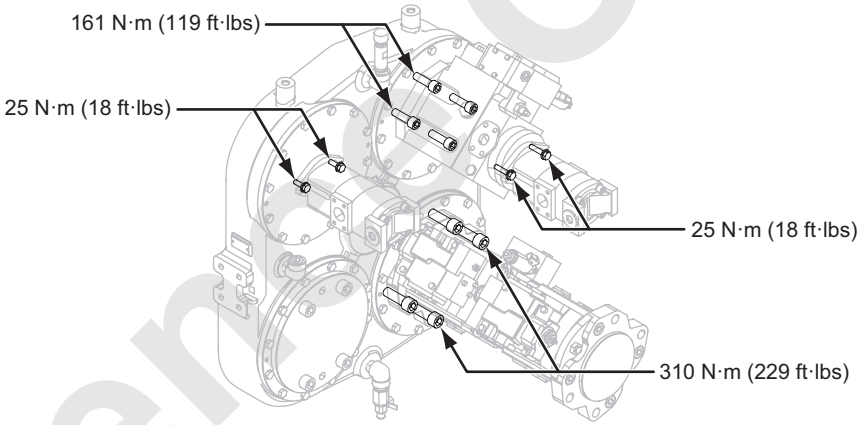
(5) Travel reduction unit assembly	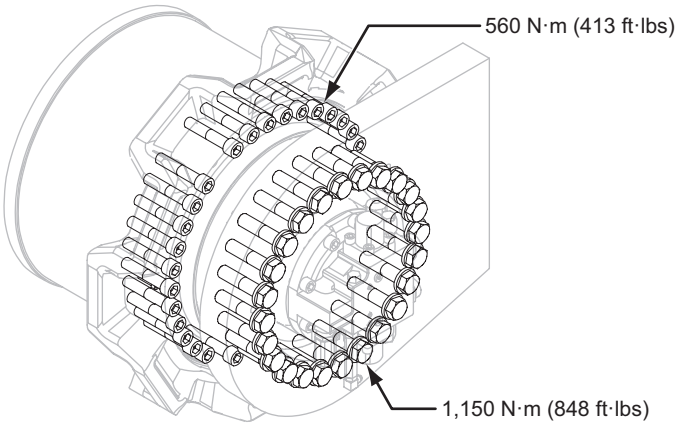

Reference Only

(6) Front and rear drum assembly	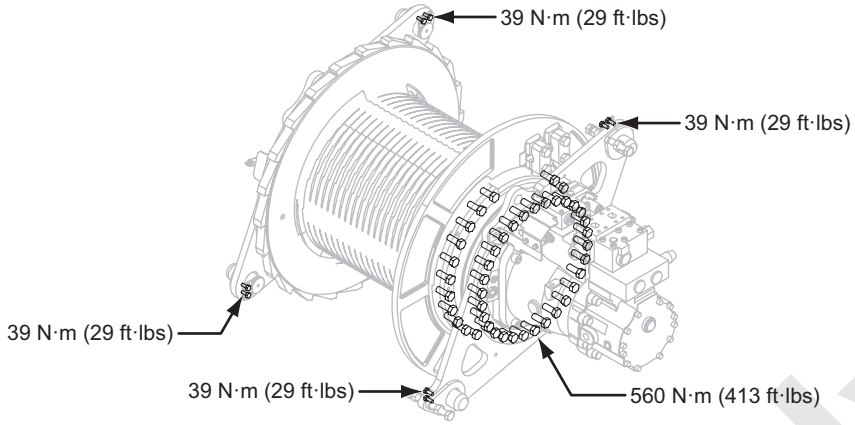
(7) Boom drum assembly	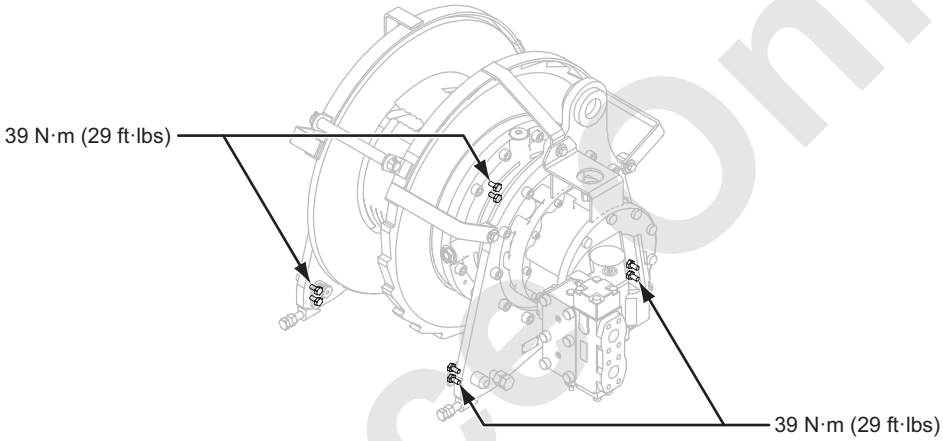

Reference Only

7.11 PERIODICAL REPLACING SECURITY PARTS

In order to use the machine safely for long time, it is requested to inspect and repair the machine periodically.
Therefore replace the following parts periodically to keep safety of the machine.

These parts may cause material deterioration by aging, wear or fatigue and may lead to serious accident.

It would be difficult to judge these parts life by operation or visual inspection.

If there is any abnormality noticed on the periodic inspection maintenance time, replace these parts with new ones even before periodic replacement time as shown here.
Contact Manitowoc service shop for part replacement.

1. Hose damage related clutch brake and control pressure may lead to the serious accident.

Hose related periodical replacing parts		Replacement Interval
(1) Front drum nega. posi-clutch main hose	Front drum CLM	2 years
	Front drum ESM	
	Rear drum CLA	
	Rear drum ESA	
	Third drum CLT	
	Third drum EST	
(2) Foot brake control hose	Front drum FBM	
	Rear drum FBA	
	Third drum FBT	
(3) Pressure control hose (Pump to line filter)	Relief valve	
(4) Pressure control hose (Line filter to accumulator)	Manifold (P0)	
(5) Pressure control hose (Accumulator to valve block)	Under floor block (PH0)	
	Left deck front P block (P2)	
	2 section valve (Remocon. cut) (P1)	
	Remocon. valve (Brake pedal) (P3)	
	4 section valve (Free fall) (P4)	
	Remocon. valve (Third brake pedal)	
	2 section valve (Third free fall)	

* Replace the following hoses as periodical replacing security parts on every 2 years or less.

As for all hydraulic hoses, inspect them periodically and replace them if oil oozing or leaking are found.

Reference Only

2. The guy lines are subject to damage caused by internal fatigue or corrosion and can not be judged for their replacement time by outer visual inspections.

   If the internal damage or corrosion is progressed, guy line may be broken and may cause serious accident.
   Make sure to replace periodically based on work condition.

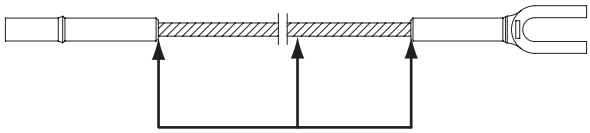

Guy line related periodically replacing parts	Recommended replacement interval
General crane work.	6 years
Crane work main with clamshell and bucket work as sub.	4 years
Only for lifting magnet, clamshell and hammer grab.	2 years

CRANE GUY LINE

Symbol	Guy line dimension		Part number	Remarks : m (ft.)	Connector type
	Diameter : mm (in.)	Length : m (ft. in.)			
A	30 (1–3/16″)	6.17 (20′ 2-15/16″)		Boom tip	
B	30 (1–3/16″)	3.05 (10′)		3.0 (10′) Boom insert	
C	30 (1–3/16″)	6.10 (20′)		6.1 (20′) Boom insert	
D	30 (1–3/16″)	12.20 (40′)		12.2 (40′) Boom insert	

CRANE JIB GUY LINE

Symbol	Guy line dimension		Part number	Connector type
	Diameter : mm (in.)	Length : m (ft. in.)		
E	22 (7/8″)	19.34 (63′ 5-7/16″)		
F	22 (7/8″)	5.88 (19′ 3-1/2″)		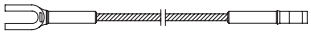
G	22 (7/8″)	11.75 (38′ 6-5/8″)		
H	22 (7/8″)	37.54 (123′ 1-15/16″)		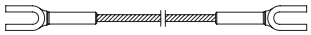
J	22 (7/8″)	2.44 (8′ 1/16″)		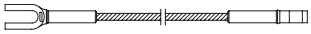

Reference Only

7.12 ADJUSTMENT

7.12.1 ADJUSTMENT OF FRONT, REAR, THIRD (OPTION) DRUM LOCKS

WARNING

Do not adjust the drum locks until the boom and hook block have been lowered to the ground.
Failure to observe this precaution may result in a serious injury or loss of life.

1. Pull the drum lock knob in the lock position and check to see that the pawl is engaged in the bottom of the drum ratchet.
   If the pawl is not engaged in the bottom of the ratchet, adjust the spring length to allow the pawl to be engaged.

2. With the release position, adjust the respective dimension as shown in the figure to the right.

3. Push the drum lock knob in the release position and check to see that the pawl is clear of the ratchet by at least 20 mm (13/16 in.).

4. Operate the knob to the lock position, and to the release position and confirm that the pawl moves smoothly.

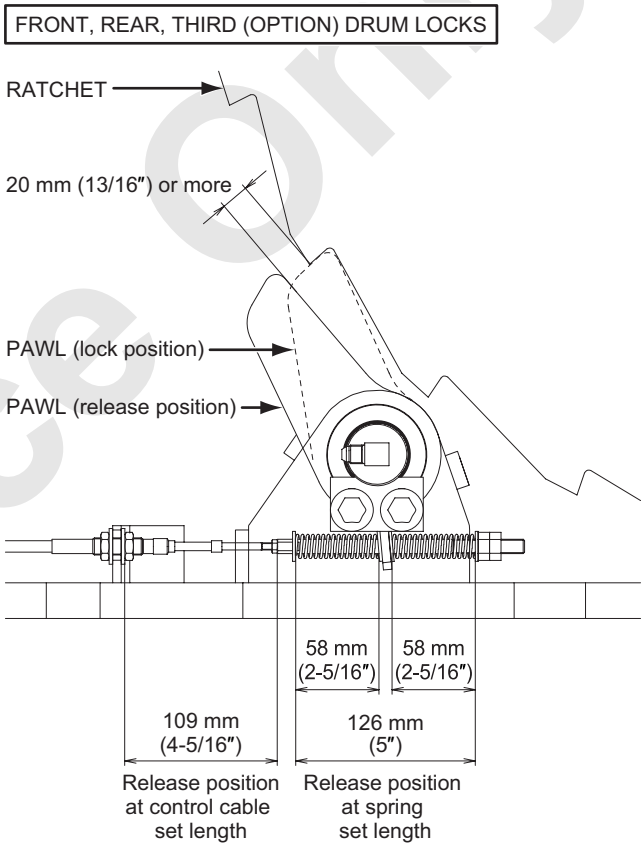

WARNING

Place a signal person to prevent accident from rotating drum.
Failure to observe this precaution may result in a serious injury.

Reference Only

7.12.2 ADJUSTMENT OF BOOM DRUM LOCK

WARNING

Do not adjust the drum locks until the boom and hook block have been lowered to the ground.
Failure to observe this precaution may result in a serious injury or loss of life.

1. Pull the drum lock knob in the lock position and check to see that the pawl is engaged in the bottom of the drum ratchet.
   If the pawl is not engaged in the bottom of the ratchet, adjust the spring length to allow the pawl to be engaged.

2. With the release position of drum lock, adjust the respective dimension as shown in the figure to the below.

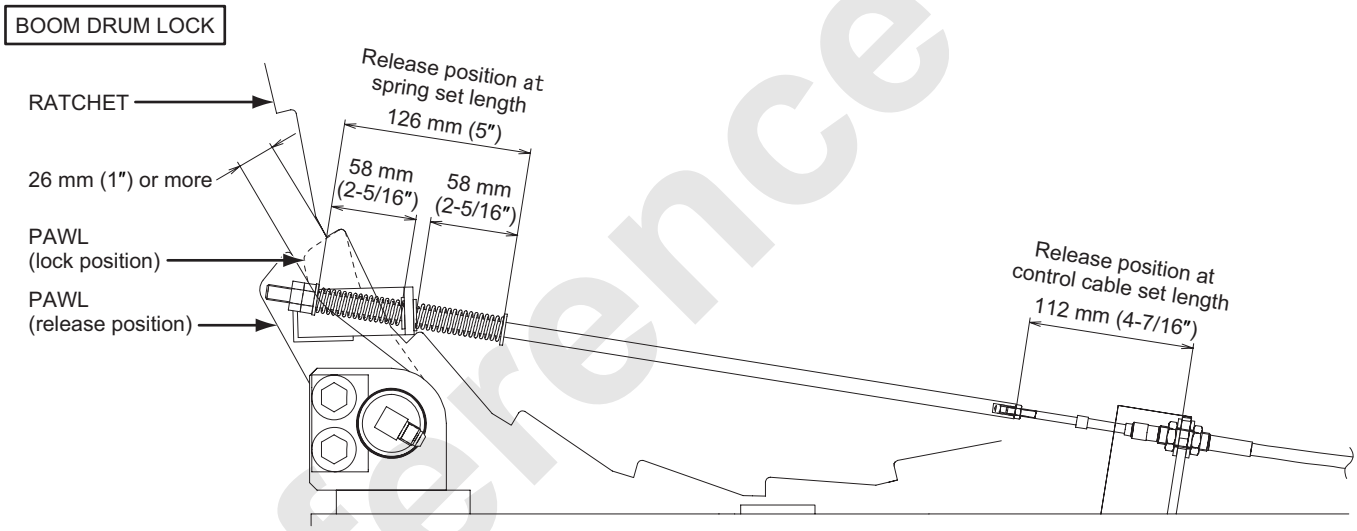

3. Push the drum lock knob in the release position and check to see that the pawl is clear of the ratchet by at least 26 mm (1 in.).

4. Operate the knob to the lock position, and to the release position and confirm that the pawl moves smoothly.

WARNING

Place a signal person to prevent accident from rotating drum.
Failure to observe this precaution may result in a serious injury.

Reference Only

7.12.3 CRAWLER SHOES ADJUSTMENT

If the crawler tension is high, the shoes wear quickly and connection between two shoes could break.
On the other hand, if the tension too loose, the shoes may run off the drive tumbler or idler wheel during travel.
To prevent these, it is necessary to adjust shoe tension.

Travel forward about 7 m (23 ft.) with the drive tumbler at rear and then adjust the shim to make upper shoe slackening to be 10 to 20 mm (13/32 to 13/16 in.).

To adjust shoe tension, proceed as follows :

1. Travel the machine forward about one crawler length so that the slack in the crawler shoes appear on the top of the crawler.

2. Remove all the shims from shim pack (a).

3. Position the hydraulic jack between the bracket and block of the side frame.
   Operate the jack to push the idler wheel and remove the slack in the shoes.

4. Insert the shims removed from pack (a) in step (2) into the vacant room of pack (b).
   Insert the remaining shims into pack (a).

5. After the shims are installed, install the mud cover (c) on the shim installation area (a).
   Install the cover (d) to the elongated hole area of both crawler frames.

⚠ CAUTION

Equalize the tension in right and left crawler tracks.

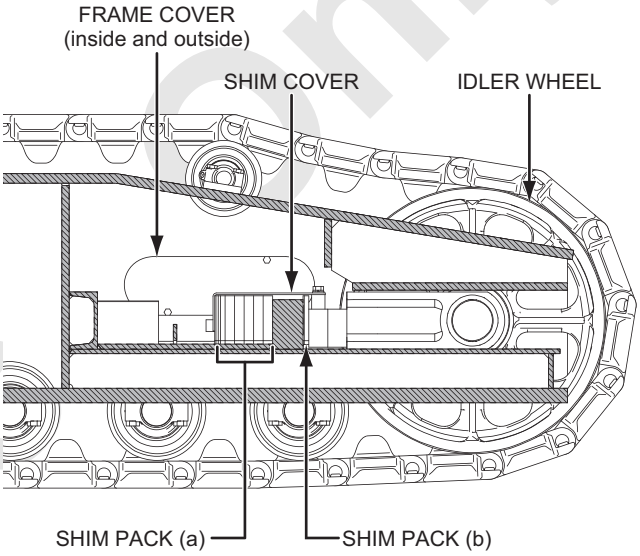

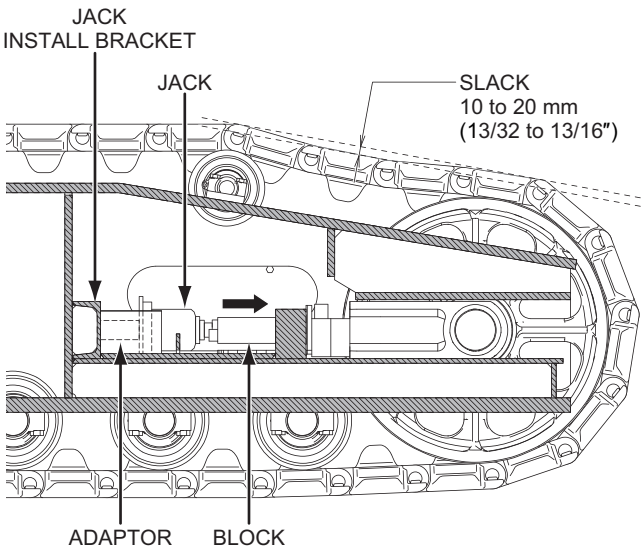

Reference Only

7.13 CONSUMABLE PARTS LIST

1. OIL/GREASE

For the recommended oil and grease, refer to the "Manitowoc GENUINE LUBRICANT CHART" on P.7-55, and use genuine Manitowoc parts.
For the battery electrolyte and the window washer liquid, use commercial items.

2. FILTER ELEMENT

For the recommended filter element, refer to the chart on P.7-87.

3. FUSE

For the recommended fuse, refer to the chart on P.7-114.

4. WIRE ROPE

For the recommended wire rope, refer to the article "6. WIRE ROPE".

5. LIGHT AND LAMP

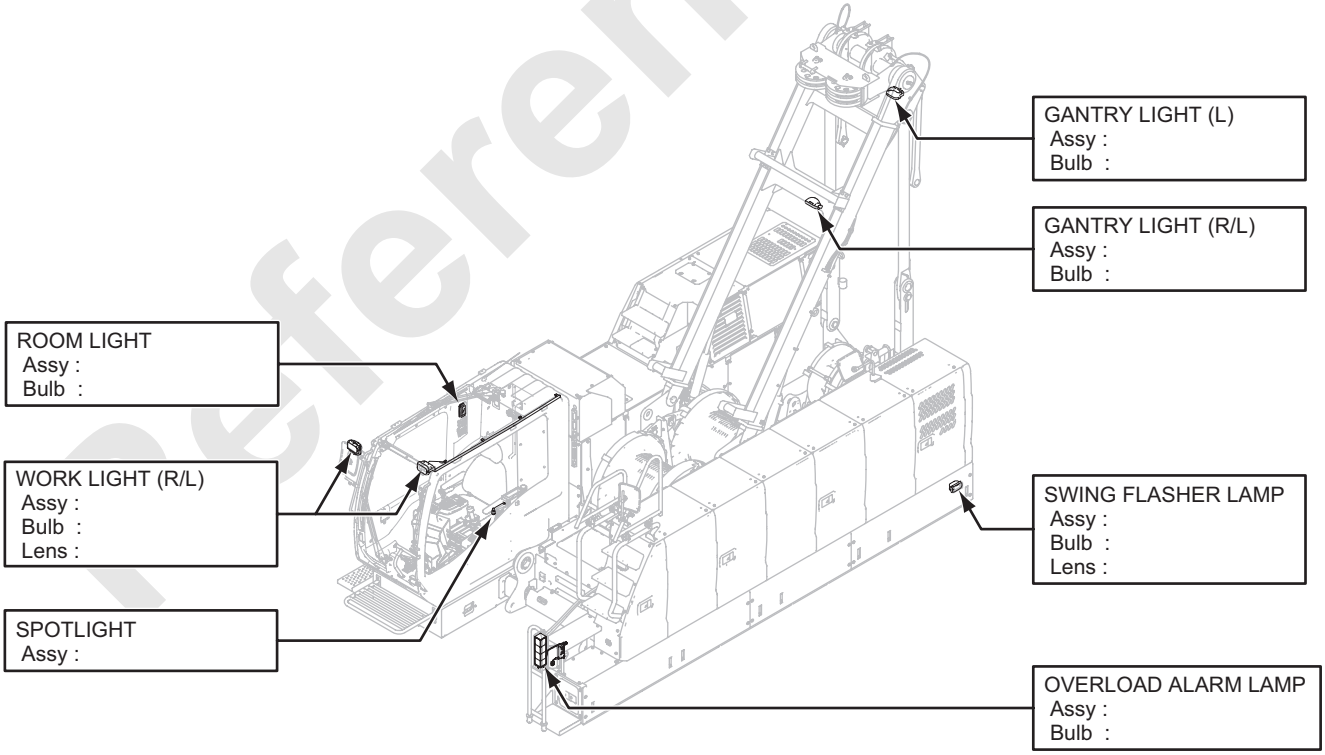

Reference Only

6. MIRROR

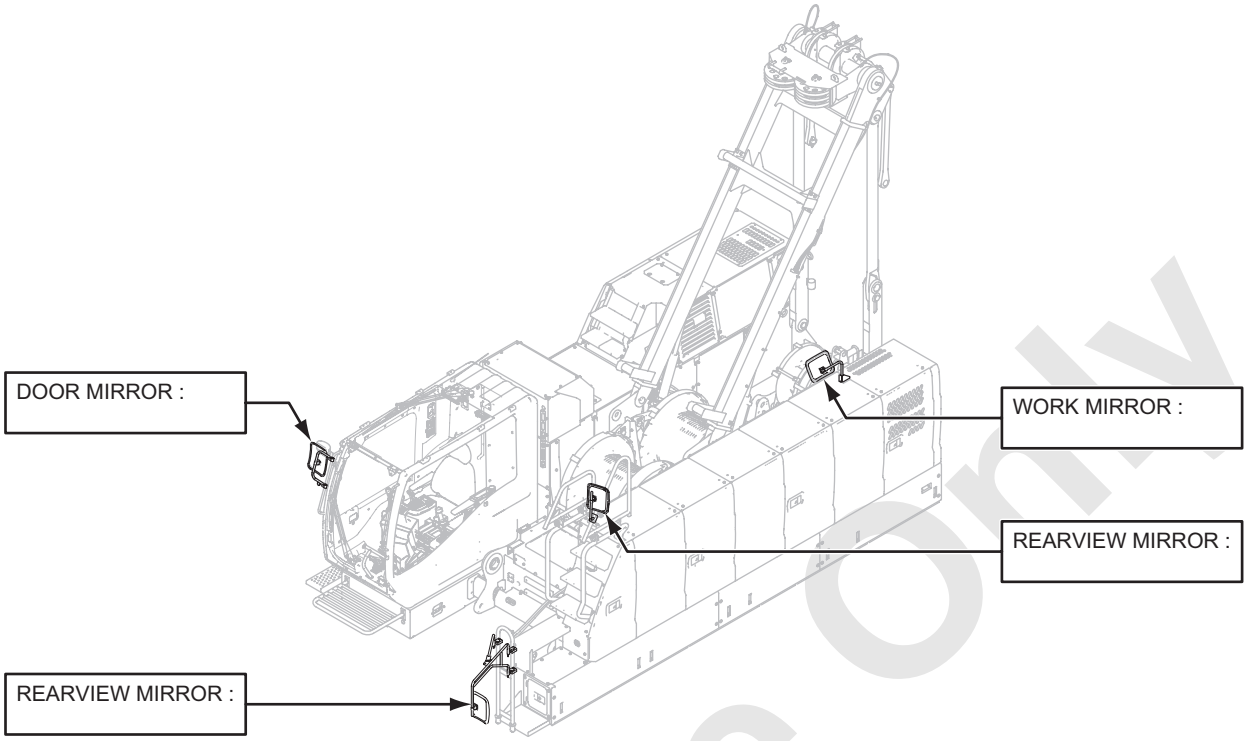

7. BATTERY

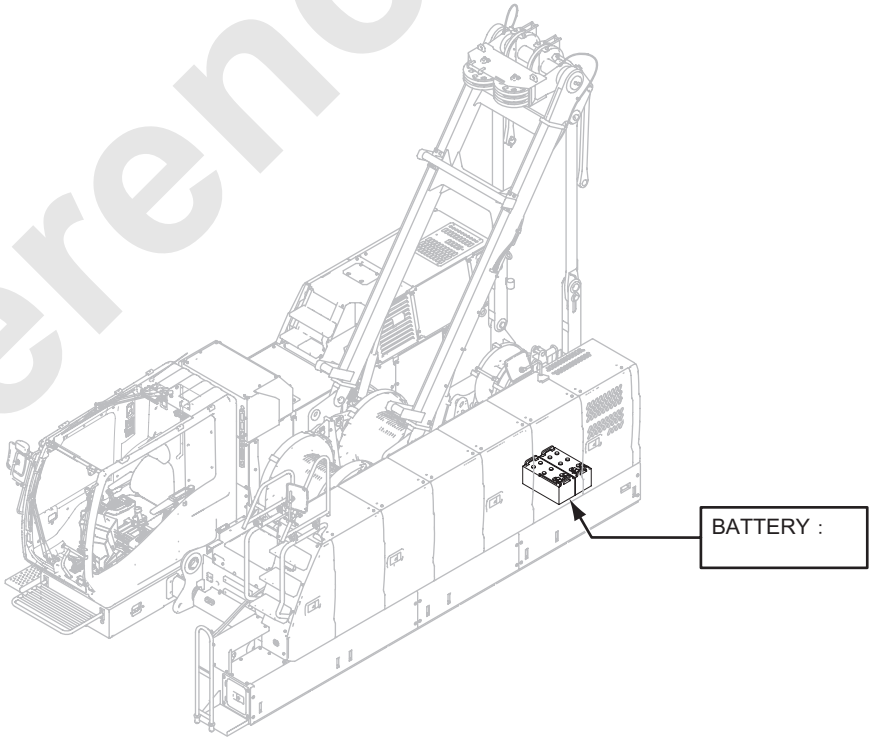

Reference Only

8. WINDOW GLASS AND WIPER

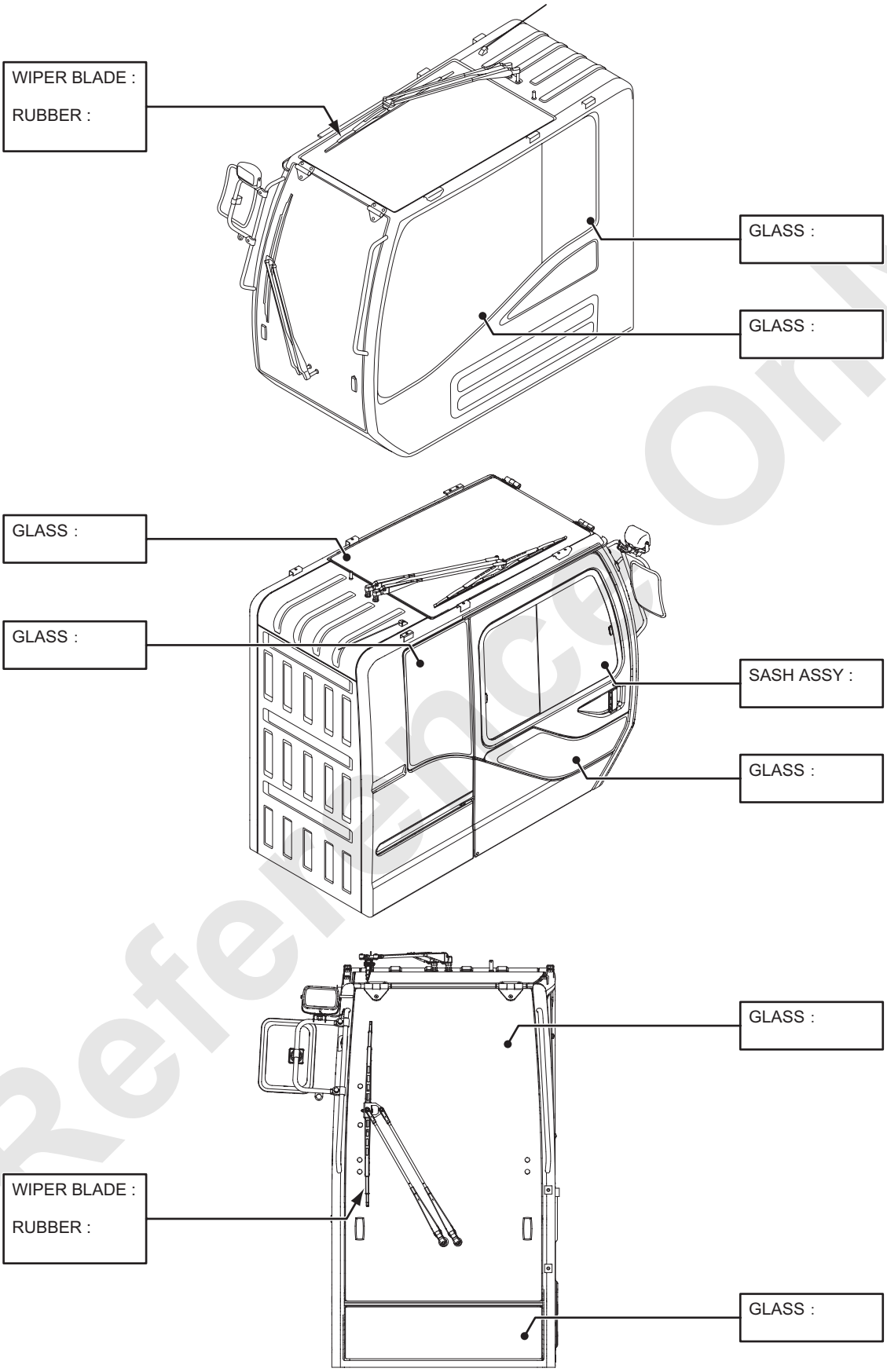

Reference Only

9. HOOK OVERHOIST LIMIT SWITCH

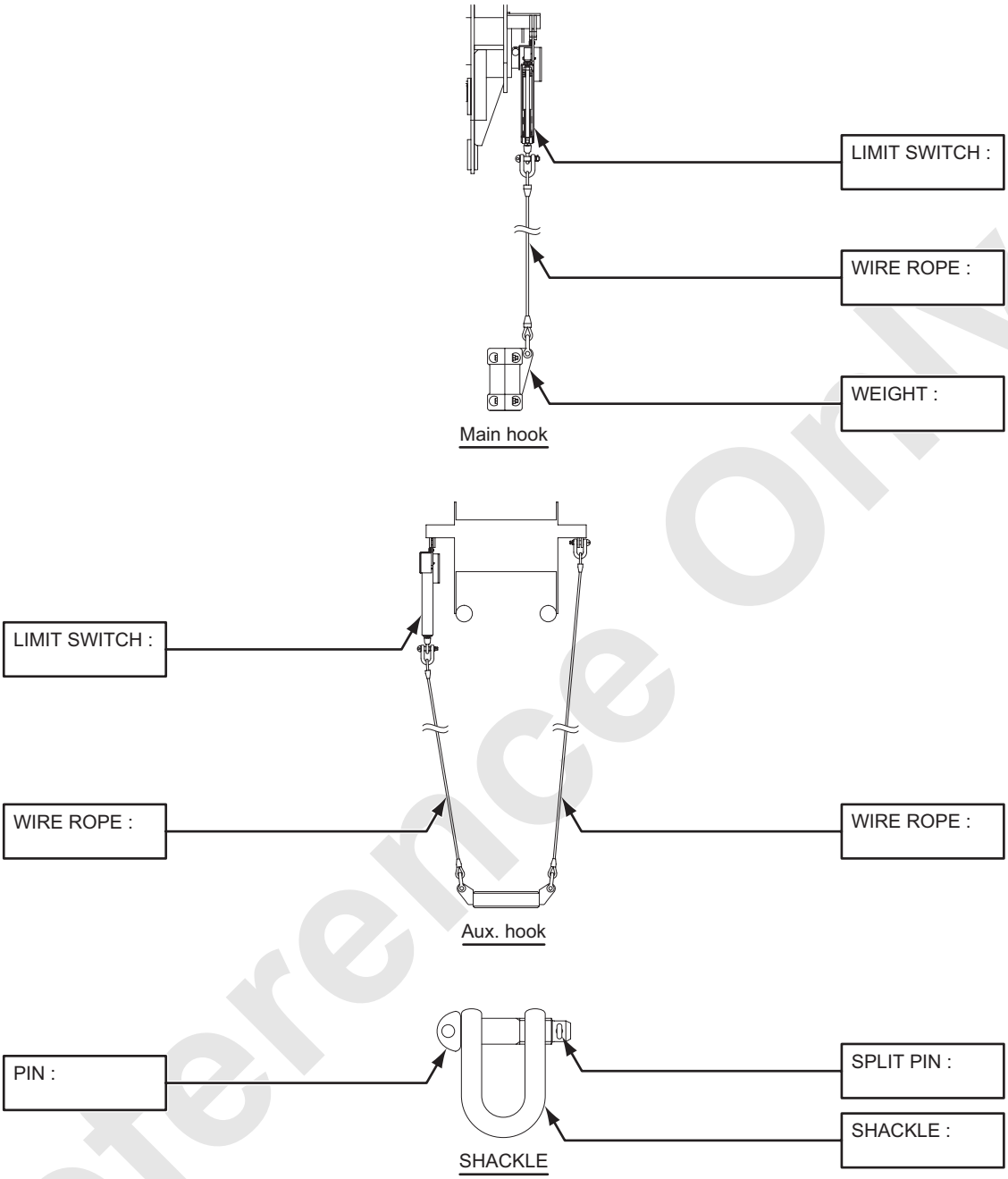

10. CABLE REEL

For crane hook overhoist	
For crane jib hook overhoist	

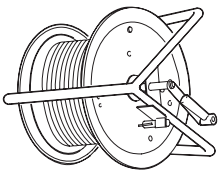

11. KEY

For the cab door, the guard door and the engine starting are used a common key.

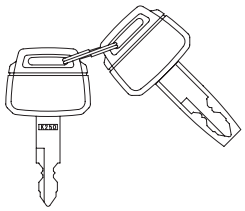

Reference Only

12. TOOL

Name	Part No.	Detail
TOOL BOX		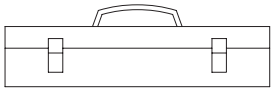
PLIERS		
ADJUSTABLE WRENCH		
HAMMER		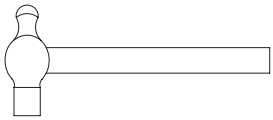
		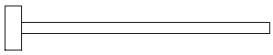
⊕ DRIVER		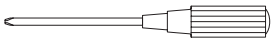
⊖ DRIVER		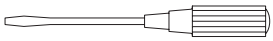
ADAPTOR (When adjustment of shoe)		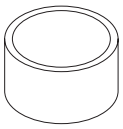
JACK (When adjustment of shoe)		

Reference Only

Name	Part No.	Detail
RATCHET HANDLE		
EXTENSION BAR		
SPANNER		
SOCKET		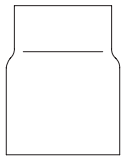
TUBE		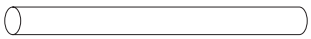
GREASE NIPPLE		
TAPE		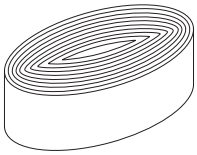
GREASE PUMP		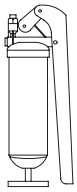
HOSE (For grease pump)		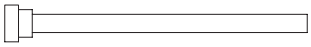

Reference Only

Name	Part No.	Detail
DRAIN HOSE (FUEL) (For engine maintenance)		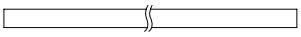
CARTRIDGE		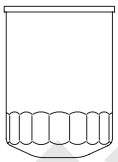
CARTRIDGE		
GREASE		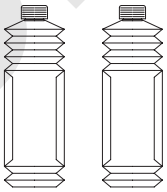
GEAR OIL (For swing gear)		
SHACKLE		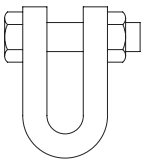
PIPE WRENCH		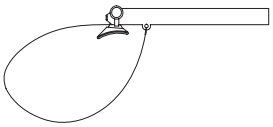
SCREW KEY		
CHAIN (For gantry cylinder)		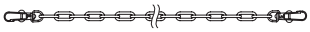

Reference Only

Name	Part No.	Detail
FUEL FILTER (HINO MADE) WRENCH		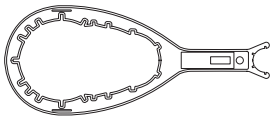
LONG NOZZLE OIL JUG (Oil jug for J08E engine maintenance)		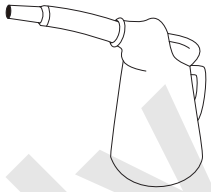

Reference Only

7.14 MEASURES REQUIRED FOR FRONT, REAR WINCH MONITORING

CAUTION

Refer to the information on the general inspection of the front, rear winch too.

7.14.1 THEORETICAL SERVICE LIFE

The theoretical service life is determined from certain operating conditions and a theoretical operating time assumed by the design engineer when calculating and dimensioning the winches of this crane.
The winches of this crane are classified as follows.
(ISO 4301/1, FEM 1.001, DIN Calculating code for power unit)

Power unit group	M3
Load spectrum	Q 1 (L 1)
Load spectrum factor	Km = 0.125
Theoretical service life	D = 3,200 h

CAUTION

The theoretical service life is not the same as the real (actual) service life of a winch.

The real service life of a winch is affected by a number of additional external factors, such as :

1. Overloading caused by improper use of the crane.	
2. Insufficient maintenance	Oil is not changed at the specified intervals.
3. Operating errors	Extreme acceleration or deceleration of the load. Sudden load drops and stops while lifting load.
4. Improper maintenance	Wrong oil used. Incorrect filling quantity. Contamination during oil change.
5. Improper assembly during maintenance and repair work.	
6. Leaks which were ignored.	
7. Improper adjustment of safety devices.	
8. Concealed damage caused by accidents.	
9. Extreme environmental conditions	Extreme low or high temperatures. Severe climate condition. Dust and dirt.

Reference Only

7.14.2 USED PROPORTION OF THEORETICAL SERVICE LIFE

The crane operator must perform a crane inspection at least once a year (ISO 9927-1).
This includes establishing the proportion of theoretical service life that has been used.
If required, the crane operator is to appoint an expert for this assessment.
The actual operating conditions (load spectrum) and the operating hours of the hoists are to be determined for each inspection interval when establishing the proportion of theoretical service life that has been used.
The operator is responsible for proper documentation in the crane logbook.

Determining the operating conditions (Load spectrum)
The load spectrum of the crane is divided into groups :
(also refer to ISO 430/1, JIS 8822-2)

⚠ CAUTION

When establishing the load frequency distribution, the existing wire rope condition is used as a standard, i.e. under certain circumstances; the crane is supporting a heavy load, whereby the winch is actually supporting a light load depending on the number of lines on the hook.
Therefore, the following graphic representation of the load distribution shall be considered to the number of lines to winch.

Reference Only

1. Actual operating conditions (load spectrum)

   One of the load spectrums listed below should be selected on the basis of the actual operating conditions and entered in the crane logbook for the respective testing interval.

* The load spectrum L1 and the load spectrum factor Km = 0.125 are generally applied to your crane.

Collective load class	Definition	Proportion of operating time	Collective load factor Km =	Graphic representation
Light Q1 L1	Power units or parts thereof that are rarely subject to maximum load , but are constantly subject to minimal loads	• 10% of the operating time with highest load (dead load + 1/1 payload) • 40% of the operating time with dead load + 1/3 payload • 50% of the operating time with dead load only	0.125	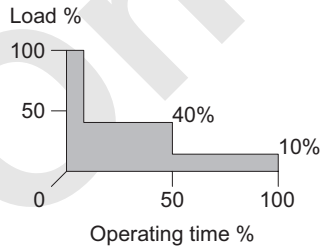
Medium Q2 L2	Power units or parts thereof that are fairly often subject to maximum load, but continuously subject minimal loads	• 1/6 of the operating time with highest load (dead load + 1/1 payload) • 1/6 of the operating time with dead load + 2/3 payload • 1/6 of the operating time with dead load + 1/3 payload • 50% of the operating time with dead load only	0.25	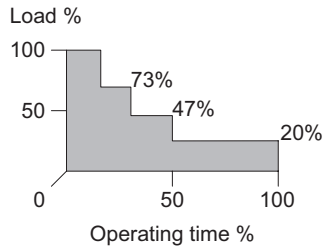
Heavy Q3 L3	Power units or parts thereof that are often subject to maximum load and continuously subject to medium loads	• 50% of the operating time with highest load (dead load + 1/1 payload) • 50% of the operating time with dead load only	0.5	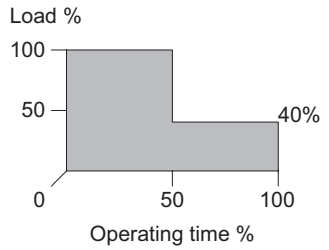
Very heavy Q4 L4	Power units or parts thereof that are regularly subject to loads close to maximum load	• 90% of the operating time with highest load (dead load + 1/1 payload) • 10% of the operating time with dead load only	1	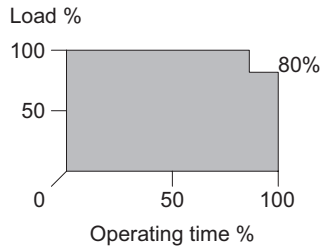

2. Determination of the effective operating hours Ti

   The effective operating hours, must be entered into the crane log book for the corresponding testing interval.

Reference Only

3. Determining the proportion of theoretical service life used

For a testing interval “i” (max. 1 year according to ISO 9927-1) the used proportion of theoretical service life Si is calculated using the formula :

$$Si = \frac{Kmi}{Km} \times Ti$$

Km	Load spectrum factor established during winch calculation. This factor is given in the operating instructions.
Kmi	Load spectrum factor in inspection interval “i” in accordance with the section “Determining the operating conditions (collective load)”
Ti	Effective operating hours in the testing interval “i” according to section “Determining the actual operating hours Ti”

This used proportion is subtracted from the remaining theoretical service life Di after every testing interval (see example in the appendix to this chapter).

If the remaining theoretical service life is not sufficient for the next operating period, then a general overhaul of the winch must be performed.

If theoretical service life D has been reached (7.14.1 THEORETICAL SERVICE LIFE), the winch must not be operated until after a general overhaul has been performed.

A general overhaul must be performed at least once every 10 years after commissioning of the crane.

The general overhaul is to be arranged by the operator and performed by the manufacturer or their representative.
The results are to be entered in the crane logbook.

The manufacturer or his representative will specify a new theoretical service life D upon completion of the general overhaul.

The next general overhaul must be performed within 10 years.

Reference Only

4. Alternative provision

If, after ten years, the theoretical service life has not been used up, the winch can continue to be operated without a general overhaul under the following conditions.

The crane expert has confirmed that the used portion of the service life is correct and proper by signing his/her name in the crane test book after every inspection.
In this case, the crane expert must closely inspect the winch.

As a minimum, this includes :

- A visual inspection of the exterior
  (for leaks, damage, malformation etc.)
- An oil inspection (especially for metallic residue)
- A load inspection with minimum and maximum rope pull and each with maximum possible speed.
  At least one position is to be wound.
  Pay attention to any unusual noises during the load inspection.

  This inspection must be confirmed in the crane test book by the crane expert and there must be a declaration of continued operation for the winch.
  The next inspection takes place before the 12th year of operation and must be repeated every year thereafter.

Reference Only

7.14.3 DETERMINING OF THE RESIDUAL THEORETICAL SERVICE LIFE

Power unit group	M3
Load spectrum	Light L1, Km = 0.125
Theoretical service life	D = 3,200 h

The used proportion S of theoretical service life is calculated over the individual inspection intervals as follows :

1. Inspection (1st year)

   The crane was used for assembly work during the previous year : Load spectrum L1,
   i.e. Km1 = 0.125.
   The operating hour counter reads 800 h.
   The winch was operated 20 % of the time,
   i.e. T1 = 160 h.
   The used proportion S1 of theoretical service life after the first inspection is therefore :

   $$Si = \frac{0.125}{0.125} \times 160\ h = 160\ h$$

   Remaining theoretical service life :

   D1 = 3,200 h - 160 h = 3,040 h

   The aforementioned values are entered in the table (see table example P.7-149.)

Reference Only

2. Inspection (2nd year)

The crane was used for unloading work on docks :
Load spectrum : L3, i.e. Km2 = 0.5.
The operating hour counter reads 2,000 h, i.e. during this period :
2,000 h - 800 h = 1,200 h (800 h were used during the first year).
The winch was operated 40 % of the time, i.e. T2 = 480 h.
The used proportion S2 of theoretical service life after the second inspection is therefore :

$$Si = \frac{0.5}{0.125} \times 480\ h = 1{,}920\ h$$

Remaining theoretical service life :

D2 = 3,040 h - 1,920 h = 1,120 h

The values above are entered in the table (see table example P.7-149.)

3. Inspection (3rd year)

The crane was used for assembly work and occasional unloading work on docks :
Load spectrum : L2, i.e. Km3 = 0.25.
The operating hour counter reads 3,000 h, i.e. during this period :
3,000 h - 2,000 h = 1,000 h (2,000 h were used during the first two years).
The winch was operated 30% of the time, i.e. T3 = 300 h.
The used proportion S3 of theoretical service life after the third inspection interval is therefore :

$$Si = \frac{0.25}{0.125} \times 300\ h = 600\ h$$

Remaining theoretical service life :

D3 = 1,220 h - 600 h = 520 h

The values are entered in the table (see table example P.7-149.)

Reference Only

Sample table to determine the remaining theoretical service life on winch no. 1 (main hoisting winch)

Crane model : 10000A-1
Work number : GH05-*****
Commissioned on : 01.01.2016
Serial number of the winch in accordance with the type plate :
Last general overhaul performed on : .....
Winch design data (see operating instructions) :
Power unit group : M 3
Load spectrum : Q 1 (L 1)
Factor of the load spectrum : Km = 0.125
Theoretical service life : D = 3,200 h

Inspection interval no. (max.1 year) "i"	Date of commission/ date of inspection	Operational condition since the last inspection	Load spectrum factor Km_i	Operating hours of the entire crane [h]	Operating hours of the superstruc-ture [h]	Operating hours of the superstruc-ture since the last inspection [h]	Operating hours of the winch [h]	Operating hours of the winch since the last inspection [h]	Used proportion of theoretical service life D: [h]	Remaining theoretical service life $D_i = D_{i-1} - S_i$ [h]	Name of competent person	Signature	Note	Name of the approved inspector	Signature
0(*)	10. 6. 11	–	–	–	0				0	3,200					
1	5. 6. 12	L 1	0.125	–	800	800	–	160 (20% of 800)	160	3,040					
2	20. 5. 13	L 2	0.5	–	2,000	1,200	–	480 (40% of 1,200)	1,920	1,120					
3	18. 5. 14	L 3	0.25	–	3,000	1,000	–	300 (30% of 1,000)	600	520					

CAUTION :
A general overhaul is to be performed every 10 years.

Alternative provision, refer to [ALTERNATIVE PROVISION] in chapter "10.11.2 ".

Last general overhaul performed on .....

S_i = Used proportion of theoretical service life since the last inspection
D_i = Remaining theoretical service life
D_{i-1} = Remaining theoretical service life after the previous inspection
Km = Load spectrum factor established during winch calculation.
This factor is given in the operating instructions.
Km_i = Load spectrum factor in the inspection interval "i".
T_i = Effective working hours in the inspection interval "i".
(*) Copy last line of the previous page to the following pages.

Reference Only

Reference Only

8. REFERENCE MATERIALS

8.1 SPECIFICATION 8-1
8.1.1 CRANE OUTSIDE DIMENSION 8-2
8.1.2 CRANE SPECIFICATION, PERFORMANCE 8-3
8.1.3 CRANE WORKING RANGES 8-5
8.2 DIMENSION, WEIGHT OF EACH COMPONENT 8-8
8.2.1 BASE MACHINE 8-8
8.2.2 COUNTERWEIGHT 8-10
8.2.3 ATTACHMENT 8-11
8.3 CLAMSHELL RATED LOADS (OPTION) 8-13
8.4 SWING AND TRAVEL STABILITY 8-17
8.5 TRAVEL ALLOWABLE SLOPE ANGLE 8-20
8.5.1 CRANE ATTACHMENT INSTALLED : BOOM INSERT CONFIGURATION 8-20
8.6 LOW GANTRY POSITION 8-26
8.7 SAFETY DEVICE LIST (OPTION) 8-27

Reference Only

Reference Only

8. REFERENCE MATERIALS

Note

Actual lengths of boom section, wire rope are metric.
The values in ( ) are approximate conversion to feet.

8.1 SPECIFICATION

This crane is designed for normal work of lifting hook.
Classification of this crane is as follows.
(ISO 4301/2, FEM 1.001)
Class of utilization : U1
State of loading : Q2
Group Classification as crane : A1
In case of severer work condition such as bucket etc, components life may be lowered.
In case of severer work condition, perform work referring to manufacture's recommended condition.
As for Front or Rear winch, calculate service life of component referring to article "7.14. MEASURES REQUIRED FOR WINCH MONITORING" and perform maintenance work under appropriate interval.

Reference Only

8.1.1 CRANE OUTSIDE DIMENSION

Unit : mm (ft. in.)

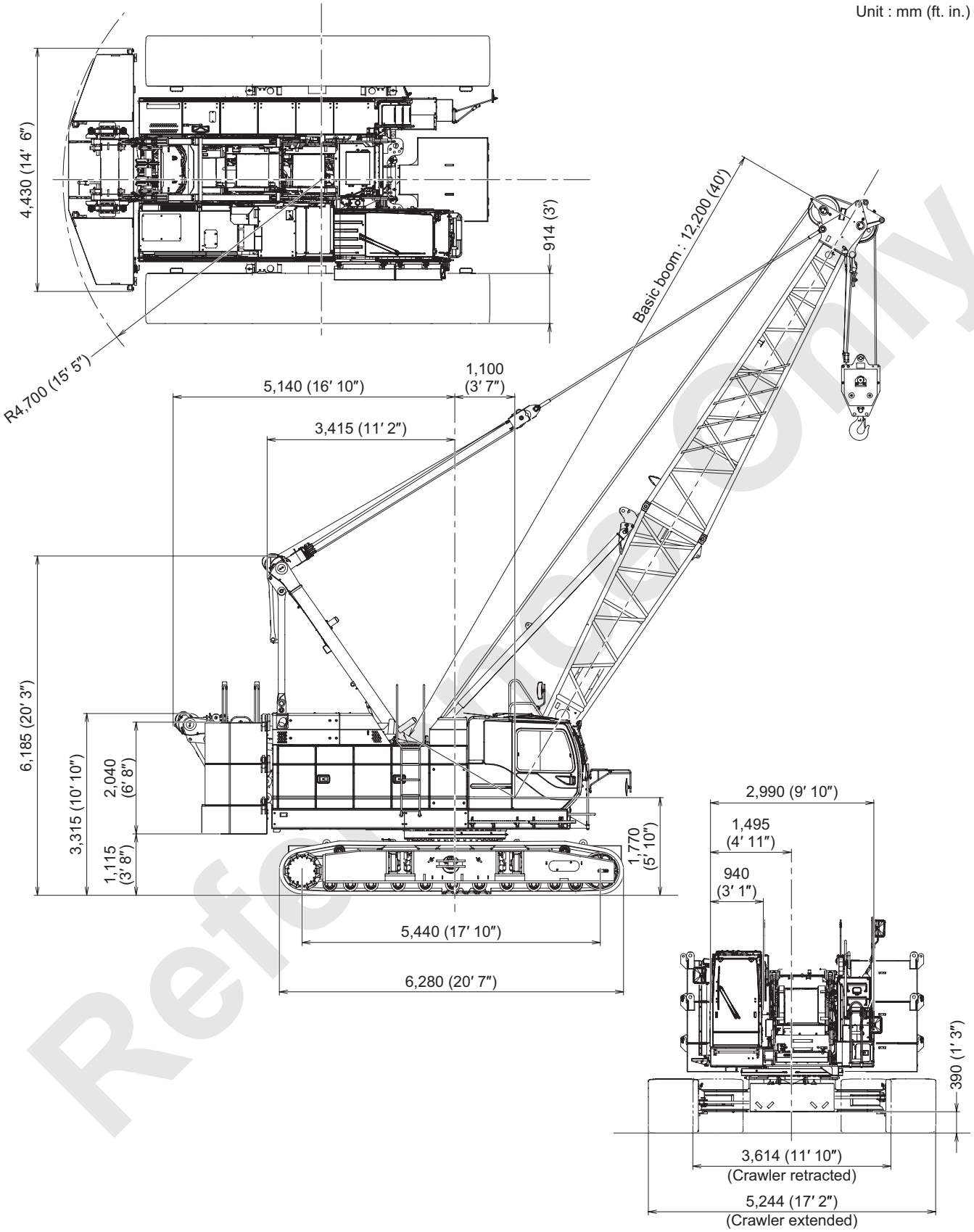

Reference Only

8.1.2 CRANE SPECIFICATION, PERFORMANCE

Type	Full swing, crawler type	
Max. rated load × work radius	99.8 t × 3.35 m (220,000 lbs × 11')	
Boom length		
• Basic boom	12.2 m (40')	
• Maximum boom	61.0 m (200')	
• Crane jib	9.1 m (30') to 18.3 m (60')	
• Maximum boom and jib	57.9 m (190') Boom + 18.3 m (60') Jib	
Work speed		Wire rope dia.
• Front / Rear hoisting rope speed	120 to 3 m/min (390 to 10 ft/min)	26 mm
• Front / Rear lowering rope speed	120 to 3 m/min (390 to 10 ft/min)	
• Boom raising rope speed	70 to 2 m/min (230 to 6.6 ft/min)	16 mm
• Boom lowering rope speed	70 to 2 m/min (230 to 6.6 ft/min)	
• Third hoisting rope speed (option)	120 to 3 m/min (390 to 10 ft/min)	22 mm
• Third lowering rope speed (option)	120 to 3 m/min (390 to 10 ft/min)	
• Swing speed	4.0 min^{-1} (4.0 rpm)	
• Travel speed	1.7/1.1 km/h (1.1/0.72 MPH)	
Gradability	40%	
Working weight *1	90.05 t (198,500 lbs)	
Average ground pressure *1	88.9 kPa (12.9 psi)	
Engine		
• Engine name	Hino J08E-VV	
• Engine out put	213 kW/2,100 min^{-1} (286 HP/2,100 rpm)	

*1 Crane (12.2 m [40'], Without rear drum rope, Without main hook)

Note

The wire rope speeds described above are the value of the drum first layer.
Each wire rope speed varies depend on the load.

Reference Only

OUTSIDE DIMENSIONS

Unit : mm (ft. in.)

Overall width of cab	2,990 (9′ 10″)
Radius of rear end (counterweight)	4,700 (15′ 5″)
Center of rotation to rear end (low gantry position)	5,140 (16′ 10″)
Center of rotation to boom foot pin (from center of rotation)	1,100 (3′ 7″)
Height from ground to boom foot pin	1,770 (5′ 10″)
Height to top of gantry (working position)	6,185 (20′ 3″)
Height to top of gantry (low gantry position)	3,315 (10′ 10″)
Counterweight ground clearance	1,115 (3′ 8″)
Overall length of crawlers	6,280 (20′ 7″)
Distance between centers of tumblers	5,440 (17′ 10″)
Overall width of crawlers (extend/retract)	5,244 / 3,614 (17′ 2″ / 11′ 10″)
Width of crawler shoe	914 (3′)
Ground clearance of carbody	390 (1′ 3″)

Reference Only

8.1.3 CRANE WORKING RANGES

1. Crane working ranges

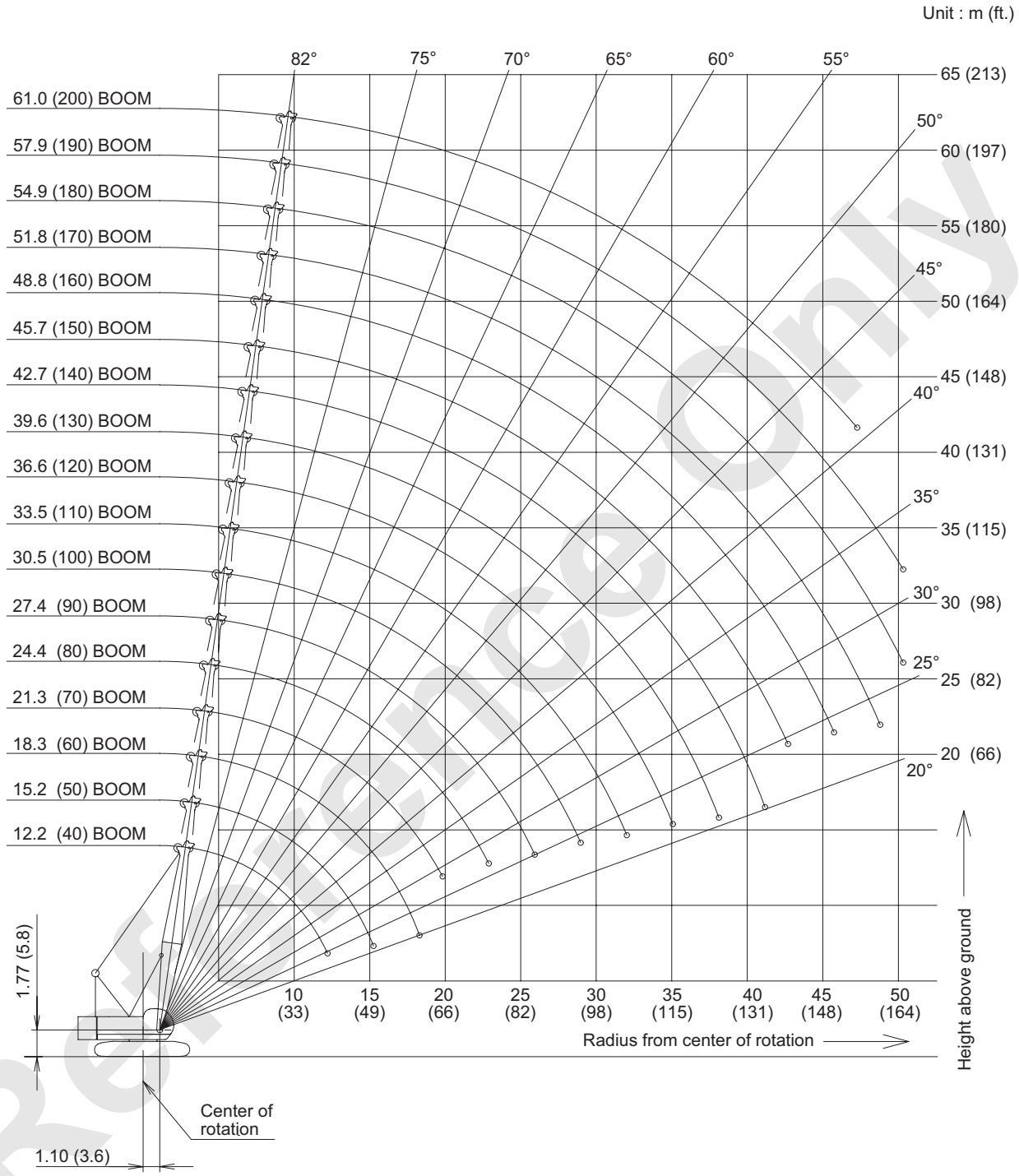

Reference Only

2. Jib working range

(1) Offset angle 10 degrees

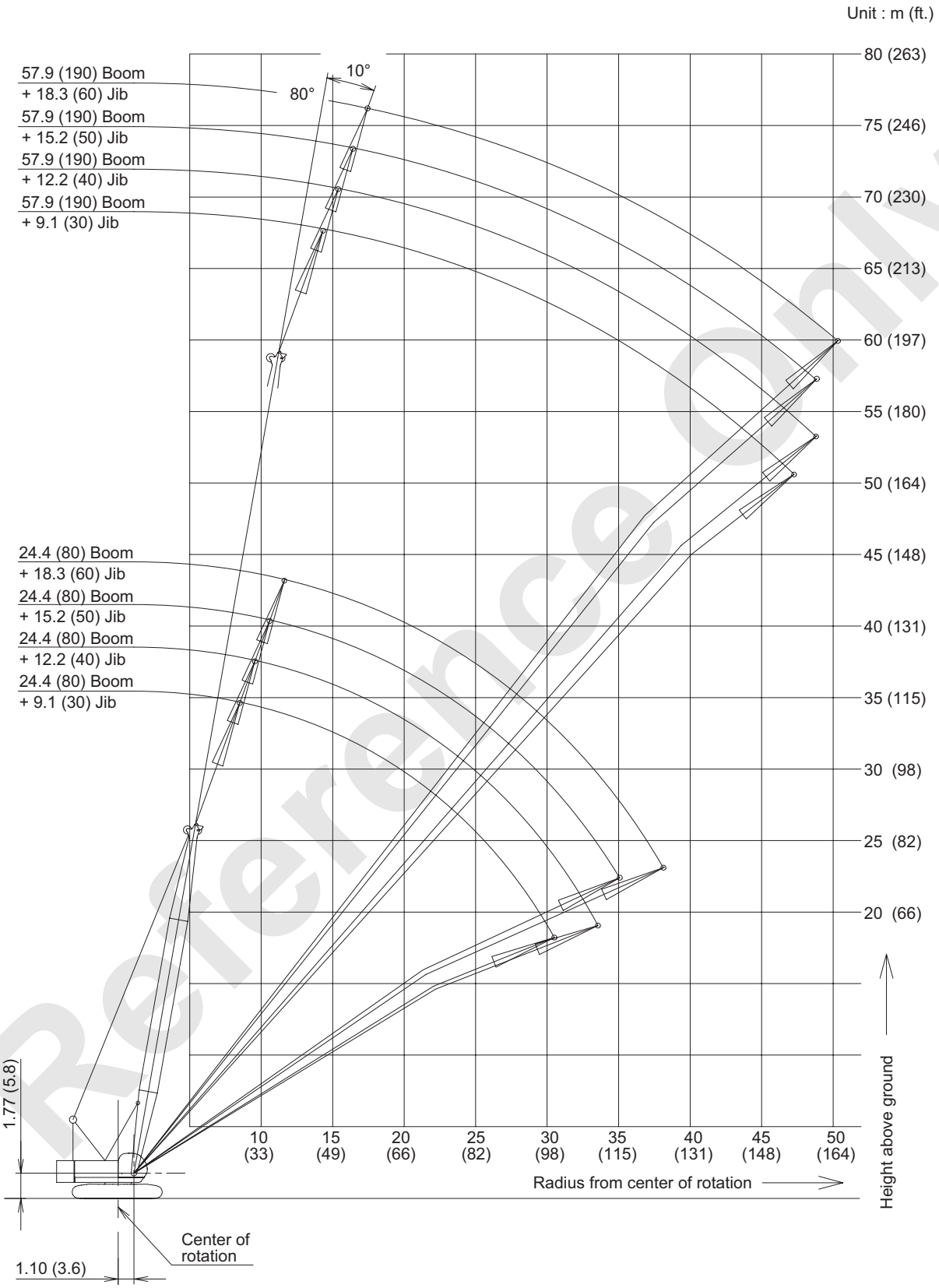

Reference Only

(2) Offset angle 30 degrees

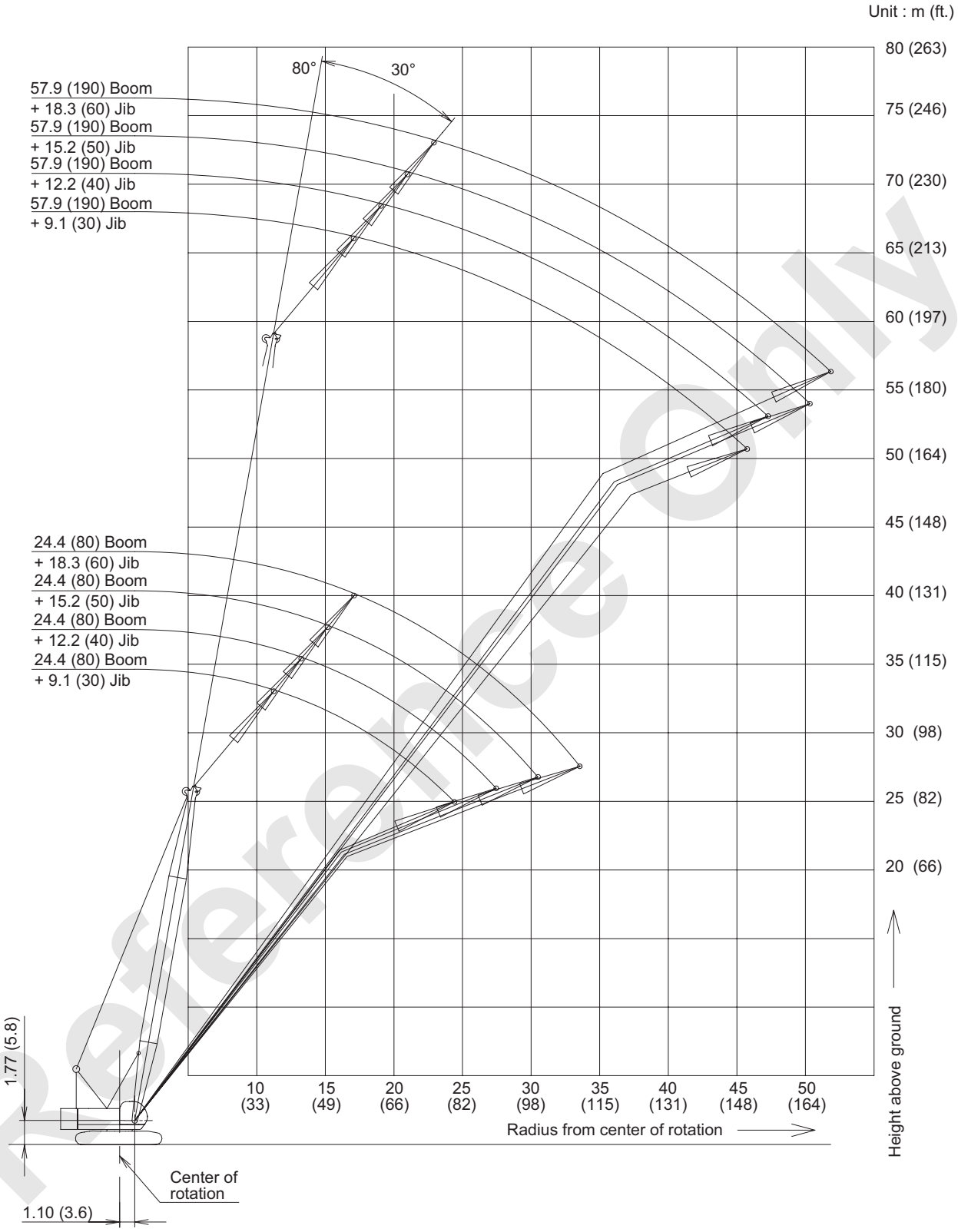

Reference Only

8.2 DIMENSION, WEIGHT OF EACH COMPONENT

Dimension and weight of each component when disassembled is shown here.
Use this as reference value.

8.2.1 BASE MACHINE

Name			Dimension mm : (ft. in.)	Weight : kg (lbs)
Transportation configuration 1	Gantry	○	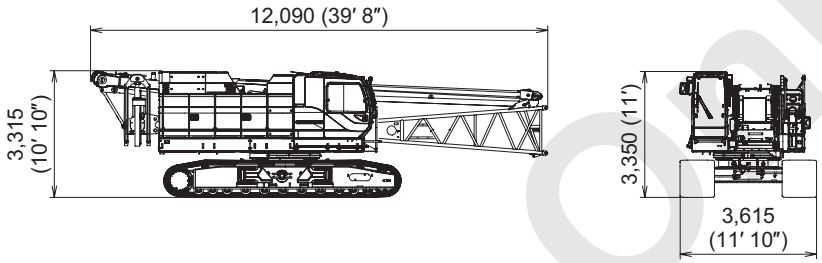	43,430 (95,800)
	Boom base	○		
	Boom drum	○		
	Wire rope (Front, rear, boom drum)	○		
	Self removal device	○		
	Side step	○		
	Crawler	○		
	Translifter (option)	×		
Transportation configuration 2	Gantry	○	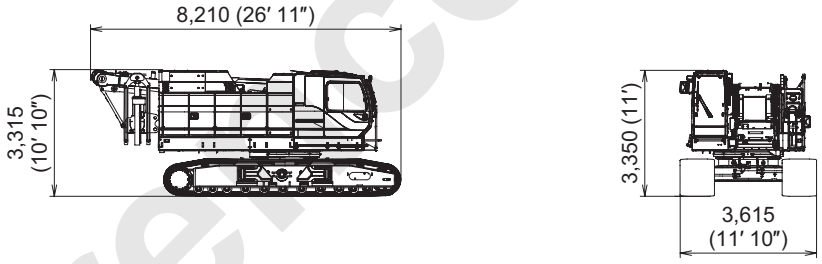	41,375 (91,200)
	Boom base	×		
	Boom drum	○		
	Wire rope (Front, rear, boom drum)	○		
	Self removal device	○		
	Side step	○		
	Crawler	○		
	Translifter (option)	×		
Transportation configuration 3	Gantry	○	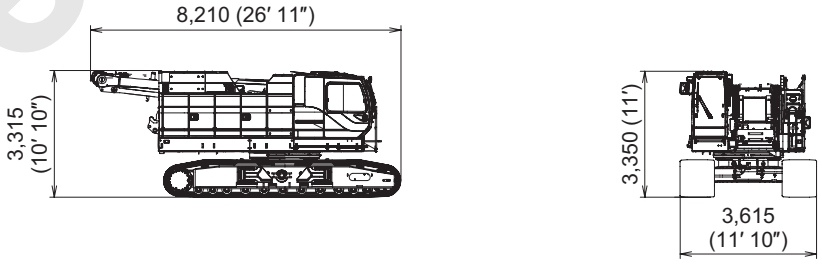	40,475 (89,300)
	Boom base	×		
	Boom drum	○		
	Wire rope (Front, rear, boom drum)	○		
	Self removal device	×		
	Side step	○		
	Crawler	○		
	Translifter (option)	×		

○ : With × : Without

Reference Only

Name			Dimension mm : (ft. in.)	Weight : kg (lbs)
Transportation configuration 4	Gantry	○	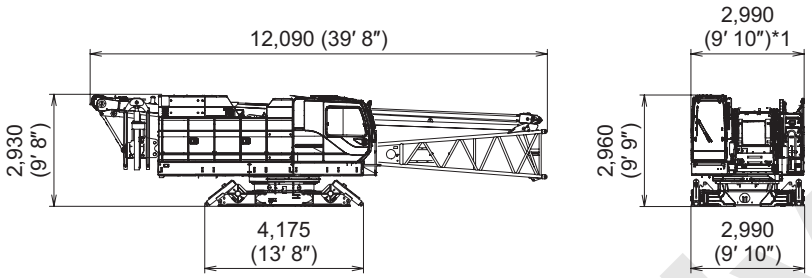	29,450 (64,900)
	Boom base	○		
	Boom drum	○		
	Wire rope (Front, rear, boom drum)	○		
	Self removal device	○		
	Side step	×		
	Crawler	×		
	Translifter (option)	○		
Transportation configuration 5	Gantry	○	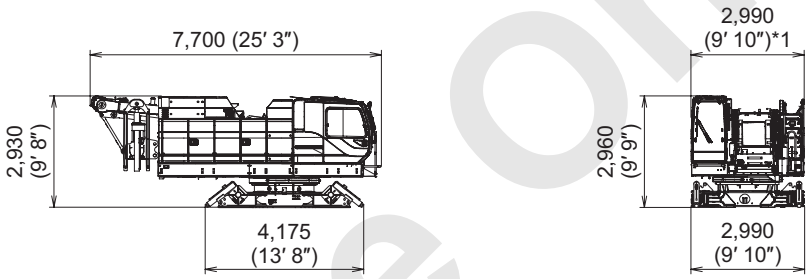	27,395 (60,400)
	Boom base	×		
	Boom drum	○		
	Wire rope (Front, rear, boom drum)	○		
	Self removal device	○		
	Side step	×		
	Crawler	×		
	Translifter (option)	○		
Crawler			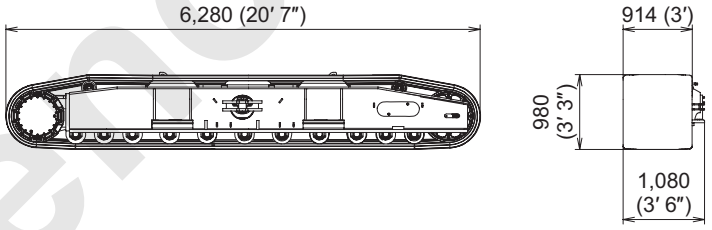	7,550 (16,700)
Translifter (option)			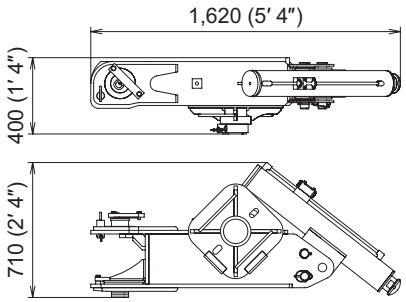	290 (640) / 1 piece

○ : With × : Without

*1 With the side step on cabin side : 3,160 (10′ 4″)
With the side steps on the both side : 3,340 (11′)

Reference Only

8.2.2 COUNTERWEIGHT

Name	Dimension mm : (ft. in.)	Weight : kg (lbs)
Counterweight (1)	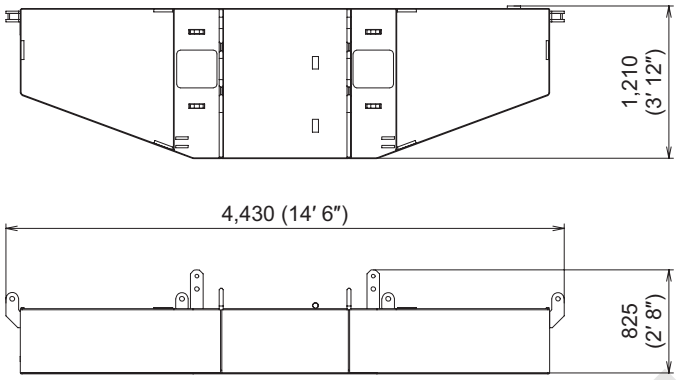	8,310 (18,300)
Right side Counterweight (3),(5)	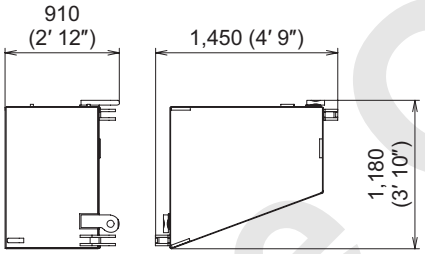	5,750 (12,700) / 1 piece
Left side Counterweight (2),(4)	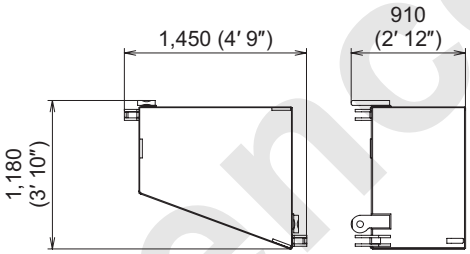	5,750 (12,700) / 1 piece
Carbody weight (1), (2)	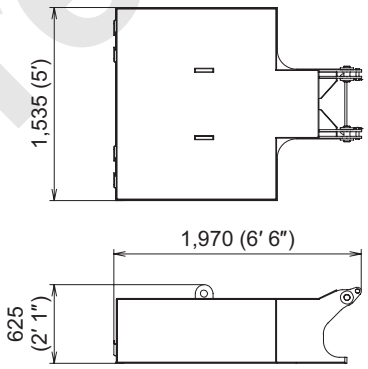	7,200 (15,900) / 1 piece
Self removal unit	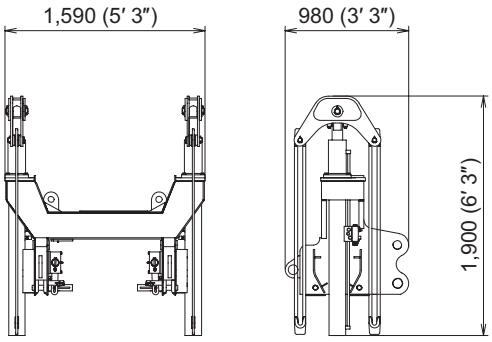	860 (1,900)

Reference Only

8.2.3 ATTACHMENT

Name	Dimension mm : (ft. in.)	Weight : kg (lbs)
Boom tip	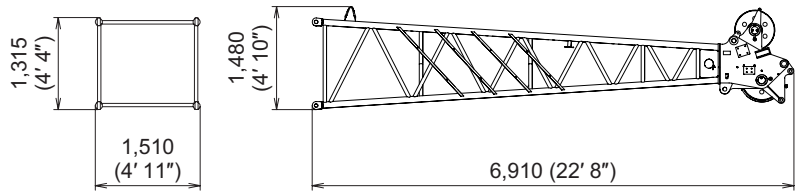	1,205 (2,700)
Boom base	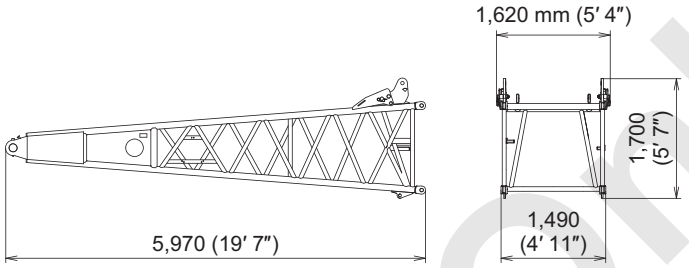	1,210 (2,700)
3.0 m (10') Boom insert	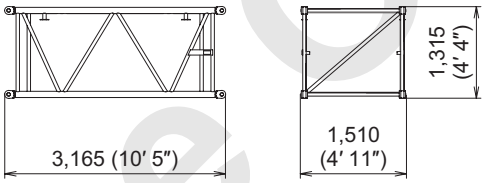	310 (680)
6.1 m (20') Boom insert	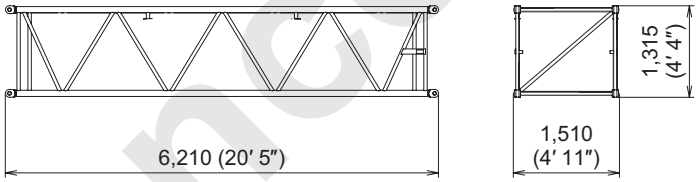	525 (1,200)
12.2 m (40') Boom insert	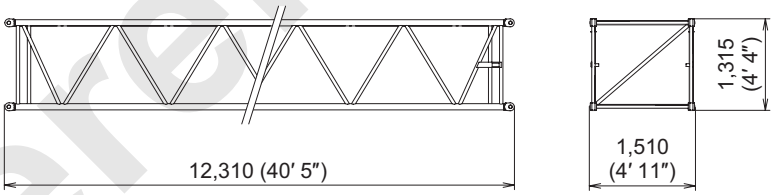	965 (2,100)
12.2 m (40') Boom insert with lug	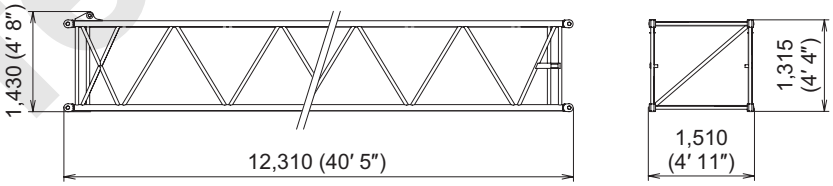	980 (2,200)
Backstop	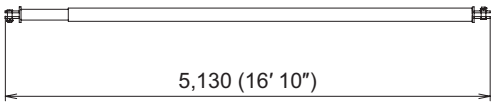	270 (600)

Reference Only

Name	Dimension mm : (ft. in.)	Weight : kg (lbs)
Jib tip	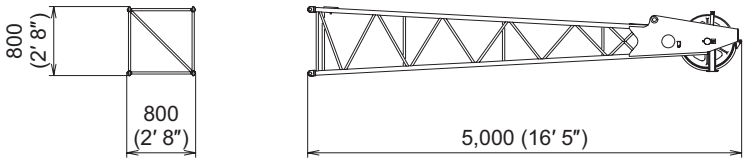	280 (620)
Jib base	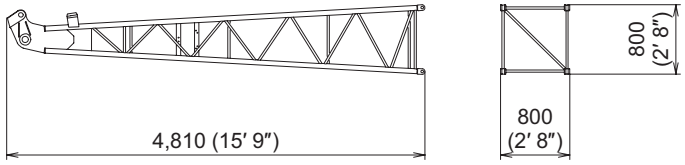	200 (440)
3.0 m (10') Jib insert	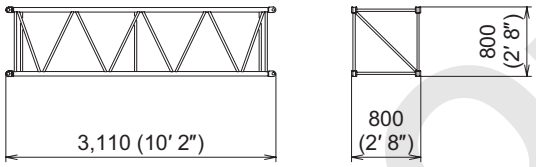	100 (220)
6.1 m (20') Jib insert	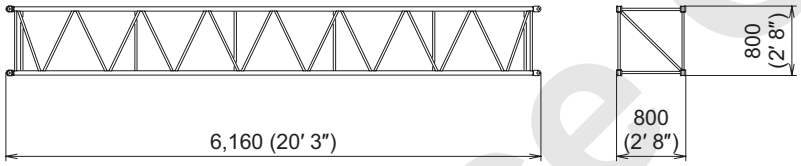	180 (400)
Jib strut	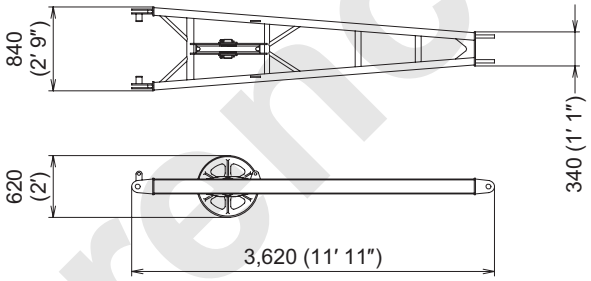	250 (550)
Auxiliary sheave	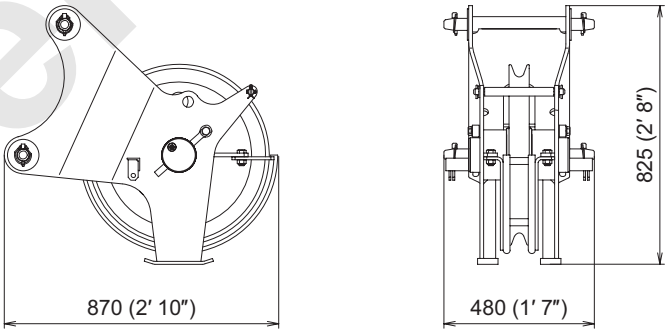	195 (430)
Upper spreader	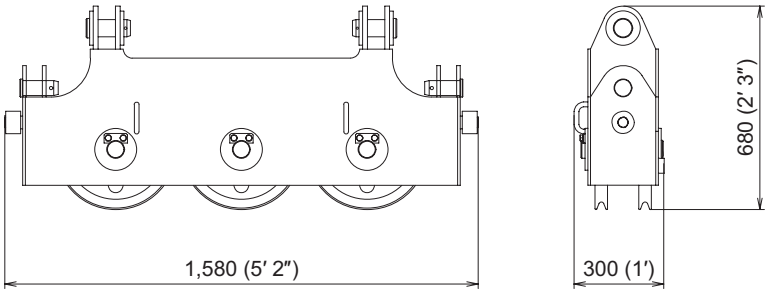	280 (620)

Reference Only

8.3 CLAMSHELL RATED LOADS (OPTION)

CLAMSHELL SPECIFICATION

1. Rated loads included in the charts are the maximum allowable freely suspended loads at a given boom length, boom angle and load radius, and have been determined for the machine standing level on firm supporting surface under ideal operating conditions.
   The user must limit or de-rate rated loads to allow for adverse conditions (such as soft or uneven ground, out-of-level conditions, wind, side loads, pendulum action, jerking or sudden stopping of loads, inexperience of personnel, multiple machine lifts, and traveling with a load).

2. Rated loads do not exceed 66% of minimum tipping loads.
   Rated loads based on factors other than machine stability such as structural competence are shown by asterisk * in the charts.

3. The machine must be reeved and set-up as stated in the operation manual and all the instruction manuals.
   If these manuals are missing, obtain replacements.

- Boom backstops are required for all boom lengths.
- Gantry must be fully raised position for all operations.
- Crawlers must be fully extended and be locked in position.
- The crane must be leveled to within 1% on a firm supporting surface.
- 43,700 lbs Counterweight and without carbody weight.

4. Do not attempt to lift where no radius is shown on the load chart as crane may tip or collapse.

5. Attempting to lift more than rated loads may cause machine to tip or collapse.
   Do not tip machine to determine rated loads.

6. Weight of bucket, slings and other lifting devices are a part of the total load.
   Their total weight must be subtracted from the rated load to obtain the weight that can be lifted.

Reference Only

7. The boom should be erected over the front of the crawlers, not laterally.

8. Least stable position is over the side.

MAXIMUM LOAD FOR MAIN BOOM

No. of Part of Line	1
Maximum Loads (lbs)	22,000

9. Rated loads listed later is to be applied only to the machine as manufactured and designed by manufacture.
   Do not apply any modification to this machine and do not use of this machine other than the specified.

10. ASSEMBLING THE COUNTERWEIGHT

- 43,700 lbs Counterweight
- Without carbody counterweight.

Operation of this equipment in excess of rated loads or disregard of instruction voids the warranty.

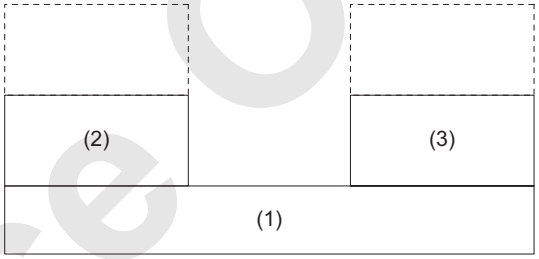

COUNTERWEIGHTS

CARBODY WEIGHTS

Reference Only

CLAMSHELL CAPACITIES IN POUNDS
THREE COUNTERWEIGHTS (43,700 lbs)
WITHOUT CARBODY WEIGHTS (0 lbs)
CRAWLERS : EXTENDED POSITION

40' Boom		
Load Radius (ft.)	Boom Angle (deg.)	360° Rated Load (lbs)
22.0	63.7	22,000 *
24.0	60.5	22,000 *
26.0	57.1	22,000 *
28.0	53.5	22,000 *
30.0	49.8	22,000 *
32.0	45.9	22,000 *
34.0	41.7	21,400 *
36.0	37.0	20,200 *
38.0	31.8	19,200 *
40.0	25.7	18,200 *

50' Boom		
Load Radius (ft.)	Boom Angle (deg.)	360° Rated Load (lbs)
26.0	64.3	22,000 *
28.0	61.7	22,000 *
30.0	59.0	22,000 *
32.0	56.3	22,000 *
34.0	53.5	21,400 *
36.0	50.5	20,200 *
38.0	47.4	19,200 *
40.0	44.2	18,200 *
42.0	40.7	17,300 *
44.0	37.0	16,500 *
46.0	32.9	15,800 *
48.0	28.3	15,200 *

60' Boom		
Load Radius (ft.)	Boom Angle (deg.)	360° Rated Load (lbs)
30.0	64.6	22,000 *
32.0	62.5	22,000 *
34.0	60.3	21,400 *
36.0	58.1	20,200 *
38.0	55.8	19,200 *
40.0	53.4	18,200 *
42.0	51.0	17,300 *
44.0	48.4	16,500 *
46.0	45.8	15,800 *
48.0	43.0	15,200 *
50.0	40.1	14,600 *
52.0	37.0	14,000 *
54.0	33.6	13,500 *
56.0	29.9	13,000 *
58.0	25.7	12,500 *

70' Boom		
Load Radius (ft.)	Boom Angle (deg.)	360° Rated Load (lbs)
34.0	64.9	21,400 *
36.0	63.1	20,200 *
38.0	61.2	19,200 *
40.0	59.3	18,200 *
42.0	57.4	17,300 *
44.0	55.4	16,500 *
46.0	53.4	15,800 *
48.0	51.3	15,200 *
50.0	49.1	14,600 *
52.0	46.9	14,000 *
54.0	44.6	13,500 *
56.0	42.2	13,000 *
58.0	39.6	12,500 *
60.0	37.0	12,100 *
62.0	34.1	11,700 *
64.0	31.0	11,400 *
66.0	27.6	11,000 *

80' Boom		
Load Radius (ft.)	Boom Angle (deg.)	360° Rated Load (lbs)
38.0	65.1	19,200 *
40.0	63.5	18,200 *
42.0	61.9	17,300 *
44.0	60.2	16,500 *
46.0	58.6	15,800 *
48.0	56.9	15,200 *
50.0	55.1	14,600 *
52.0	53.3	14,000 *
54.0	51.5	13,500 *
56.0	49.6	13,000 *
58.0	47.7	12,500 *
60.0	45.7	12,100 *
62.0	43.7	11,700 *
64.0	41.5	11,400 *
66.0	39.3	11,000 *
68.0	37.0	10,700 *
70.0	34.5	10,400 *
72.0	31.8	10,100 *
74.0	28.9	9,800 *
76.0	25.7	9,400 *

90' Boom		
Load Radius (ft.)	Boom Angle (deg.)	360° Rated Load (lbs)
42.0	65.2	17,300 *
44.0	63.8	16,500 *
46.0	62.4	15,800 *
48.0	60.9	15,200 *
50.0	59.5	14,600 *
52.0	58.0	14,000 *
54.0	56.4	13,500 *
56.0	54.9	13,000 *
58.0	53.3	12,500 *
60.0	51.7	12,100 *
62.0	50.0	11,700 *
64.0	48.3	11,400 *
66.0	46.6	11,000 *
68.0	44.8	10,700 *
70.0	43.0	10,400 *
72.0	41.0	10,100 *
74.0	39.0	9,700
76.0	36.9	9,200
78.0	34.7	9,000
80.0	32.4	8,500
82.0	29.9	8,300
84.0	27.2	7,900

Reference Only

CLAMSHELL CAPACITIES IN POUNDS
THREE COUNTERWEIGHTS (43,700 lbs)
WITHOUT CARBODY WEIGHTS (0 lbs)
CRAWLERS : EXTENDED POSITION

100' Boom		
Load Radius (ft.)	Boom Angle (deg.)	360° Rated Load (lbs)
46.0	65.4	15,800 *
48.0	64.1	15,200 *
50.0	62.8	14,600 *
52.0	61.5	14,000 *
54.0	60.2	13,500 *
56.0	58.8	13,000 *
58.0	57.5	12,500 *
60.0	56.1	12,100 *
62.0	54.7	11,700 *
64.0	53.3	11,400 *
66.0	51.8	11,000 *
68.0	50.4	10,700 *
70.0	48.8	10,300
72.0	47.3	9,900
74.0	45.7	9,400
76.0	44.1	9,000
78.0	42.4	8,800
80.0	40.6	8,300
82.0	38.8	8,100
84.0	36.9	7,700
86.0	35.0	7,400
88.0	32.9	7,200
90.0	30.7	7,000
92.0	28.3	6,800
94.0	25.8	6,600

110' Boom		
Load Radius (ft.)	Boom Angle (deg.)	360° Rated Load (lbs)
56.0	62.0	11,900 *
58.0	60.8	11,700 *
60.0	59.6	11,600 *
62.0	58.3	11,300 *
64.0	57.1	11,100 *
66.0	55.8	10,800 *
68.0	54.6	10,400 *
70.0	53.3	10,100
72.0	52.0	9,700
74.0	50.6	9,300
76.0	49.2	8,900
78.0	47.8	8,500
80.0	46.4	8,200
82.0	45.0	7,900
84.0	43.4	7,500
86.0	41.9	7,200
88.0	40.3	7,000
90.0	38.6	6,800
92.0	36.9	6,600
94.0	35.1	6,400
96.0	33.3	6,200
98.0	31.3	5,900
100.0	29.2	5,700
102.0	27.0	5,500
104.0	24.5	5,300

120' Boom		
Load Radius (ft.)	Boom Angle (deg.)	360° Rated Load (lbs)
56.0	64.5	11,400 *
58.0	63.4	11,300 *
60.0	62.3	11,200 *
62.0	61.3	11,000 *
64.0	60.2	10,800 *
66.0	59.0	10,600 *
68.0	57.9	10,200 *
70.0	56.8	9,900
72.0	55.6	9,500
74.0	54.5	9,100
76.0	53.3	8,800
78.0	52.1	8,400
80.0	50.8	8,100
82.0	49.6	7,700
84.0	48.3	7,400
86.0	47.0	7,100
88.0	45.7	6,800
90.0	44.3	6,600
92.0	42.9	6,400
94.0	41.5	6,200
96.0	40.0	6,000
98.0	38.5	5,700
100.0	36.9	5,500
102.0	35.3	5,300
104.0	33.6	5,100
106.0	31.8	5,000

Reference Only

8.4 SWING AND TRAVEL STABILITY

The stability while swinging and traveling of the machine is to be varied depending on the mass of counterweight, condition of the attachment, extension or retraction of the crawler and traveling on the slope. The operation must be started after confirm the machine stability while swinging and traveling by referring with following table.

1. The table above shows the values for operation on firm ground.
   On a weak ground, operate with care after improving the ground.

2. Swinging on a trailer is prohibited.

3. Maximum slope angle is 21.8 degrees (40%).
   This may become lower depending on condition (ground, crane configuration).

4. Traveling “forward” means that the counterweight is at the lower side of the slope, and “backward” is the counterweight is at the higher side of the slope.

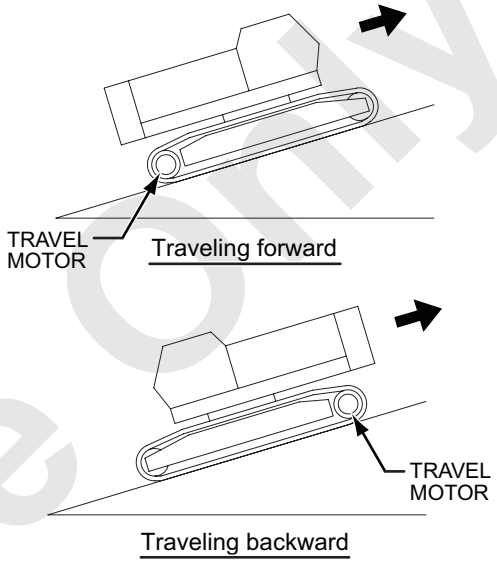

Reference Only

TABLE FOR STABILITY (WITHOUT CARBODY WEIGHT)

Attachment	Counterweight	All-round swing		Travel on slope	
		Crawler extend	Crawler retract	Forward	Backward
Without attachment (Base machine only)	Without : 0 t	○	○	○	○
	No.1 : 8.31 t (18,320 lbs)	○	△ (No abrupt lever control)	△ (Slope 16 degrees or less)	○
	No.1 to No.2 : 19.81 t (43,674 lbs)	△ (No abrupt lever control)	×	×	△ (No abrupt lever control)
	No.1 to No.3 : 31.31 t (69,028 lbs)	×	×	×	×
With boom base (Boom angle : 10 degrees or less)	Without : 0 t	○	○	○	○
	No.1 : 8.31 t (18,320 lbs)	○	○	○	○
	No.1 to No.2 : 19.81 t (43,674 lbs)	○	×	×	○
	No.1 to No.3 : 31.31 t (69,028 lbs)	×	×	×	×
With basic boom (Boom angle : 30 degrees or less)	Without : 0 t	○	○	○	○
	No.1 : 8.31 t (18,320 lbs)	○	○	○	○
	No.1 to No.2 : 19.81 t (43,674 lbs)	○	×	△ (Slope 7 degrees or less)	○
	No.1 to No.3 : 31.31 t (69,028 lbs)	△ (No abrupt lever control)	×	×	△ (No abrupt lever control)

○ : Allowed △ : With restriction × : Not allowed

Reference Only

TABLE FOR STABILITY (WITH CARBODY WEIGHT)

Attachment	Counterweight	All-round swing		Travel on slope	
		Crawler extend	Crawler retract	Forward	Backward
Without attachment (Base machine only)	Without : 0 t	○	○	○	○
	No.1 : 8.31 t (18,320 lbs)	○	○	○	○
	No.1 to No.2 : 19.81 t (43,674 lbs)	○	×	△ (Slope 8 degrees or less)	○
	No.1 to No.3 : 31.31 t (69,028 lbs)	△ (No abrupt lever control)	×	×	△ (No abrupt lever control)
With boom base (Boom angle : 10 degrees or less)	Without : 0 t	○	○	○	○
	No.1 : 8.31 t (18,320 lbs)	○	○	○	○
	No.1 to No.2 : 19.81 t (43,674 lbs)	○	×	△ (Slope 12 degrees or less)	○
	No.1 to No.3 : 31.31 t (69,028 lbs)	△ (No abrupt lever control)	×	×	△ (No abrupt lever control)
With basic boom (Boom angle : 30 degrees or less)	Without : 0 t	○	○	○	○
	No.1 : 8.31 t (18,320 lbs)	○	○	○	○
	No.1 to No.2 : 19.81 t (43,674 lbs)	○	△ (No abrupt lever control)	△ (Slope 18 degrees or less)	○
	No.1 to No.3 : 31.31 t (69,028 lbs)	○	×	△ (Slope 3 degrees or less)	○

○ : Allowed △ : With restriction × : Not allowed

Reference Only

8.5 TRAVEL ALLOWABLE SLOPE ANGLE

8.5.1 CRANE ATTACHMENT INSTALLED : BOOM INSERT CONFIGURATION

CAUTION

Do not travel with the symbol of "–" in the table.
The machine may possible turnover.
Failure to observe this precaution may result in a serious accident.

If the machine has to travel by some reason, observe the following points.

- Do not travel with a load lifted.
- Travel with low speed and gently.
- Travel on the flat and firm ground.
- Ensure to check the ground condition and travel on the slope angle smaller than shown in the chart.
- Travel straight against slope.
- Provide the gentle slope at the beginning and end positions of slope.

TRAVEL UPWARD DOWNWARD ON SLOPE (θ : ALLOWABLE ANGLE)

Forward	Backward
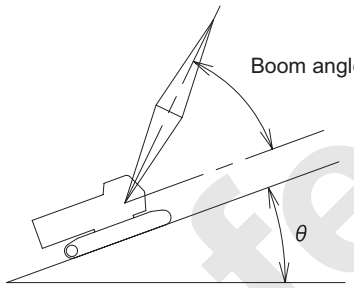	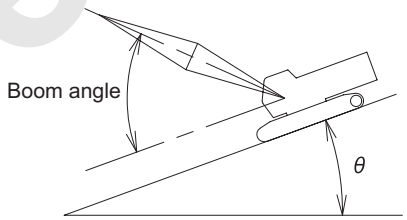

Reference Only

1. Crane travel allowable slope angle

(1) Without Aux. sheave

(Unit : Degrees)

Boom length m (ft.)	Forward			Backward		
	Boom angle			Boom angle		
	35	40	50	40	50	60
12.2 (40)	5	5	4	8	8	8
15.2 (50)	7	6	5	8	8	8
18.3 (60)	8	8	6	8	8	8
21.3 (70)	8	8	6	8	8	8
24.4 (80)	8	8	7	8	8	8
27.4 (90)	8	8	8	8	8	8
30.5 (100)	8	8	8	8	8	8
33.5 (110)	8	8	8	8	8	8
36.6 (120)	8	8	8	8	8	8
39.6 (130)	8	8	8	8	8	8
42.7 (140)	8	8	8	8	8	8
45.7 (150)	8	8	8	8	8	8
48.8 (160)	8	8	8	7	8	8
51.8 (170)	8	8	8	5	6	8
54.9 (180)	8	8	8	3	4	6
57.9 (190)	8	8	8	1	2	5
61.0 (200)	8	8	8	-	1	3

(2) With Aux. sheave

(Unit : Degrees)

Boom length m (ft.)	Forward			Backward		
	Boom angle			Boom angle		
	35	40	50	40	50	60
12.2 (40)	5	5	4	8	8	8
15.2 (50)	7	6	5	8	8	8
18.3 (60)	8	8	6	8	8	8
21.3 (70)	8	8	6	8	8	8
24.4 (80)	8	8	7	8	8	8
27.4 (90)	8	8	8	8	8	8
30.5 (100)	8	8	8	8	8	8
33.5 (110)	8	8	8	8	8	8
36.6 (120)	8	8	8	8	8	8
39.6 (130)	8	8	8	8	8	8
42.7 (140)	8	8	8	8	8	8
45.7 (150)	8	8	8	8	8	8
48.8 (160)	8	8	8	7	8	8
51.8 (170)	8	8	8	5	6	8
54.9 (180)	8	8	8	3	4	6
57.9 (190)	8	8	8	1	2	5

Reference Only

2. Fixed jib travel allow slope angle

(Unit : Degrees)

Jib length m (ft.)	9.1 (30)					
Offset angle	10					
Configuration	Forward			Backward		
Boom length m (ft.)	Boom angle			Boom angle		
	35	40	50	40	50	60
24.4 (80)	8	8	8	8	8	8
27.4 (90)	8	8	8	8	8	8
30.5 (100)	8	8	8	8	8	8
33.5 (110)	8	8	8	8	8	8
36.6 (120)	8	8	8	8	8	8
39.6 (130)	8	8	8	8	8	8
42.7 (140)	8	8	8	8	8	8
45.7 (150)	8	8	8	8	8	8
48.8 (160)	8	8	8	8	8	8
51.8 (170)	8	8	8	8	8	8
54.9 (180)	8	8	8	6	8	8
57.9 (190)	8	8	8	2	6	8

(Unit : Degrees)

Jib length m (ft.)	9.1 (30)					
Offset angle	30					
Configuration	Forward			Backward		
Boom length m (ft.)	Boom angle			Boom angle		
	35	40	50	40	50	60
24.4 (80)	8	8	8	8	8	8
27.4 (90)	8	8	8	8	8	8
30.5 (100)	8	8	8	8	8	8
33.5 (110)	8	8	8	8	8	8
36.6 (120)	8	8	8	8	8	8
39.6 (130)	8	8	8	8	8	8
42.7 (140)	8	8	8	8	8	8
45.7 (150)	8	8	8	8	8	8
48.8 (160)	8	8	8	8	8	8
51.8 (170)	8	8	8	8	8	8
54.9 (180)	8	8	8	7	8	8
57.9 (190)	8	8	8	2	6	8

Reference Only

(Unit : Degrees)

Jib length m (ft.)	12.2 (40)					
Offset angle	10					
Configuration	Forward			Backward		
Boom length m (ft.)	Boom angle			Boom angle		
	35	40	50	40	50	60
24.4 (80)	8	8	8	8	8	8
27.4 (90)	8	8	8	8	8	8
30.5 (100)	8	8	8	8	8	8
33.5 (110)	8	8	8	8	8	8
36.6 (120)	8	8	8	8	8	8
39.6 (130)	8	8	8	8	8	8
42.7 (140)	8	8	8	8	8	8
45.7 (150)	8	8	8	8	8	8
48.8 (160)	8	8	8	8	8	8
51.8 (170)	8	8	8	8	8	8
54.9 (180)	8	8	8	4	8	8
57.9 (190)	8	8	8	-	4	8

(Unit : Degrees)

Jib length m (ft.)	12.2 (40)					
Offset angle	30					
Configuration	Forward			Backward		
Boom length m (ft.)	Boom angle			Boom angle		
	35	40	50	40	50	60
24.4 (80)	8	8	8	8	8	8
27.4 (90)	8	8	8	8	8	8
30.5 (100)	8	8	8	8	8	8
33.5 (110)	8	8	8	8	8	8
36.6 (120)	8	8	8	8	8	8
39.6 (130)	8	8	8	8	8	8
42.7 (140)	8	8	8	8	8	8
45.7 (150)	8	8	8	8	8	8
48.8 (160)	8	8	8	8	8	8
51.8 (170)	8	8	8	8	8	8
54.9 (180)	8	8	8	4	8	8
57.9 (190)	8	8	8	-	4	8

Reference Only

(Unit : Degrees)

Jib length m (ft.)	15.2 (50)					
Offset angle	10					
Configuration	Forward			Backward		
Boom length m (ft.)	Boom angle			Boom angle		
	35	40	50	40	50	60
24.4 (80)	8	8	8	8	8	8
27.4 (90)	8	8	8	8	8	8
30.5 (100)	8	8	8	8	8	8
33.5 (110)	8	8	8	8	8	8
36.6 (120)	8	8	8	8	8	8
39.6 (130)	8	8	8	8	8	8
42.7 (140)	8	8	8	8	8	8
45.7 (150)	8	8	8	8	8	8
48.8 (160)	8	8	8	8	8	8
51.8 (170)	8	8	8	7	8	8
54.9 (180)	8	8	8	2	6	8
57.9 (190)	8	8	8	-	2	7

(Unit : Degrees)

Jib length m (ft.)	15.2 (50)					
Offset angle	30					
Configuration	Forward			Backward		
Boom length m (ft.)	Boom angle			Boom angle		
	35	40	50	40	50	60
24.4 (80)	8	8	8	8	8	8
27.4 (90)	8	8	8	8	8	8
30.5 (100)	8	8	8	8	8	8
33.5 (110)	8	8	8	8	8	8
36.6 (120)	8	8	8	8	8	8
39.6 (130)	8	8	8	8	8	8
42.7 (140)	8	8	8	8	8	8
45.7 (150)	8	8	8	8	8	8
48.8 (160)	8	8	8	8	8	8
51.8 (170)	8	8	8	7	8	8
54.9 (180)	8	8	8	2	6	8
57.9 (190)	8	8	8	-	2	7

Reference Only

(Unit : Degrees)

Jib length m (ft.)	18.3 (60)					
Offset angle	10					
Configuration	Forward			Backward		
Boom length m (ft.)	Boom angle			Boom angle		
	35	40	50	40	50	60
24.4 (80)	8	8	8	8	8	8
27.4 (90)	8	8	8	8	8	8
30.5 (100)	8	8	8	8	8	8
33.5 (110)	8	8	8	8	8	8
36.6 (120)	8	8	8	8	8	8
39.6 (130)	8	8	8	8	8	8
42.7 (140)	8	8	8	8	8	8
45.7 (150)	8	8	8	8	8	8
48.8 (160)	8	8	8	8	8	8
51.8 (170)	8	8	8	5	8	8
54.9 (180)	8	8	8	-	4	8
57.9 (190)	8	8	8	-	1	6

(Unit : Degrees)

Jib length m (ft.)	18.3 (60)					
Offset angle	30					
Configuration	Forward			Backward		
Boom length m (ft.)	Boom angle			Boom angle		
	35	40	50	40	50	60
24.4 (80)	8	8	8	8	8	8
27.4 (90)	8	8	8	8	8	8
30.5 (100)	8	8	8	8	8	8
33.5 (110)	8	8	8	8	8	8
36.6 (120)	8	8	8	8	8	8
39.6 (130)	8	8	8	8	8	8
42.7 (140)	8	8	8	8	8	8
45.7 (150)	8	8	8	8	8	8
48.8 (160)	8	8	8	8	8	8
51.8 (170)	8	8	8	5	8	8
54.9 (180)	8	8	8	-	4	8
57.9 (190)	8	8	8	-	1	5

Reference Only

8.6 LOW GANTRY POSITION

During the work, if the machine must travel under low overhead place such as under bridge, move with low gantry position (Gantry is lowered).

DANGER

Never lift a load with low gantry position. Otherwise damage to the boom, gantry or travel kit or coming up of counterweight may occur and is very dangerous.
Ensure to see that there is enough clearance between the machine height / boom height and the low overhead place. Make low gantry travel distance as short as possible and slowly.
Failure to observe this precaution mat result in a serious accident.

CONDITIONS

- The crawlers are fully extended.
- All counterweight are equipped and secured firmly with bolts.
- Install the travel kit to the counterweight firmly.
- Travel on level ground with low speed.
- The boom angle is horizontal or slightly up.
- Guy cable with proper length is connected on the boom tip.
- Boom angle should be such that the guy cables do not press down the boom tip guide roller.
- The longest boom length is 15.2 m (50 ft.)
  (The longest boom length with auxiliary sheave is 15.2 m [50 ft.])

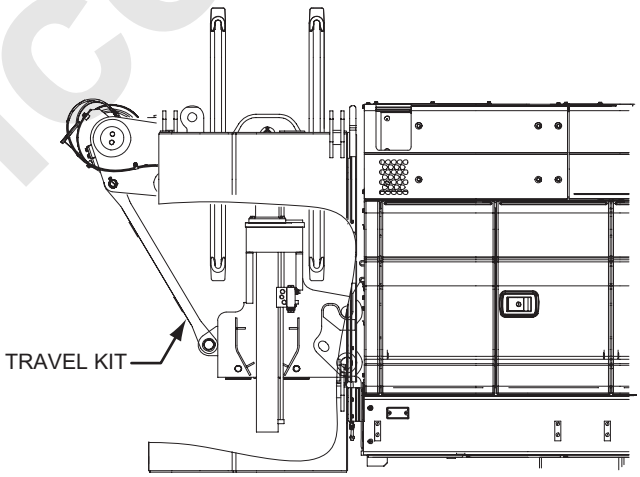

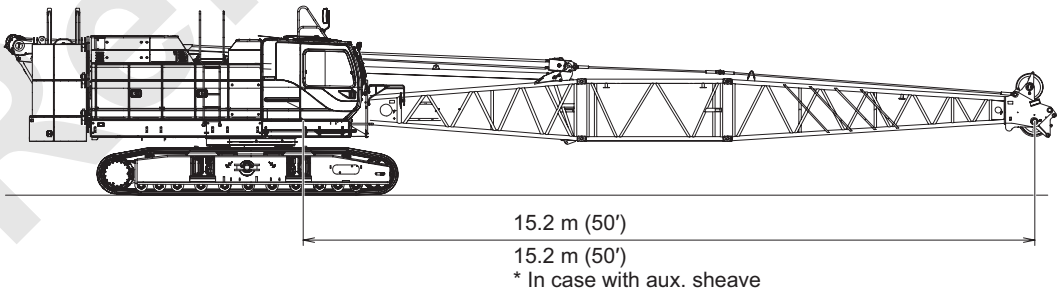

Reference Only

8.7 SAFETY DEVICE LIST (OPTION)

Item	Assembly dwg No.
1. MONITOR CAMERA Monitor camera installation for rope winding and machine rear condition.	Front / rear drum monitor camera
	Boom drum monitor camera
	Machine rear monitor camera
	Controller installation.
2. CAB CEILING WINDOW GUARD Preventing damage of ceiling window by falling thing.	
3. AUXILIARY PLATFORM Stowing type step on the both side of machine deck. (width : 300 mm)	Width : 300 mm (1')
4. LOAD SAFETY DEVICE EXTERNAL INDICATING LAMP Indication of load condition by square type 3 color light to outside (gr, ye. Re)	
5. TRAVEL WARNING DEVICE Warning at travel by buzzer intermittent sound.	
6. EXTINGUISHER ABC powder type extinguisher	For EU
7. RIGHT AND LEFT GUARD UPPER FACE HANDRAIL (HIGH) Preventing falling off at guard upper face (folding type).	For right guard
	For left guard

Reference Only

Reference Only

9. DIAGRAM

9.1 HYDRAULIC DIAGRAM 9-1
9.2 ELECTRIC SCHEMATIC 9-5

Reference Only

Reference Only

9. DIAGRAM

9.1 HYDRAULIC DIAGRAM

1. WITH FREE FALL

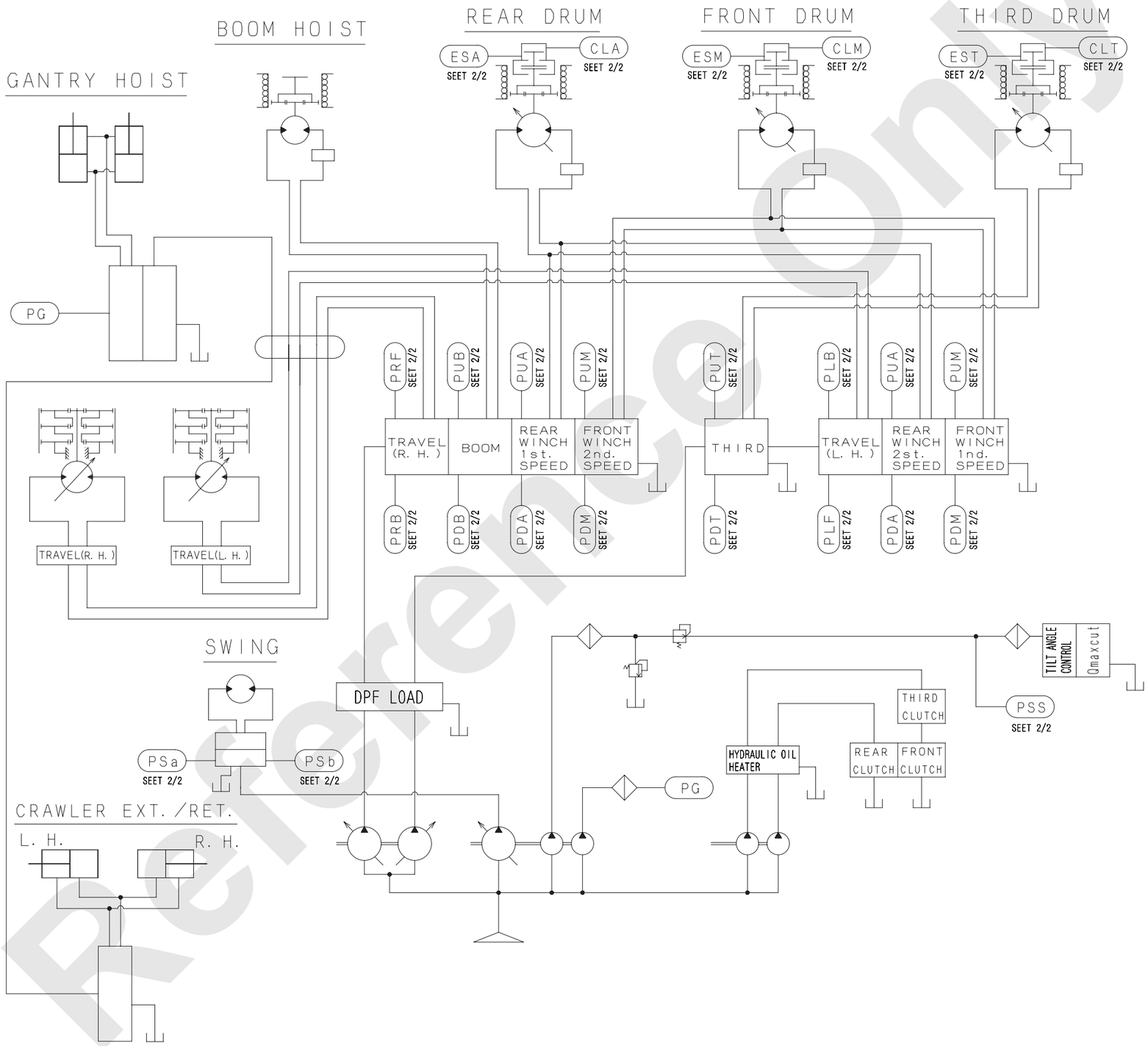

(1/2)

Reference Only

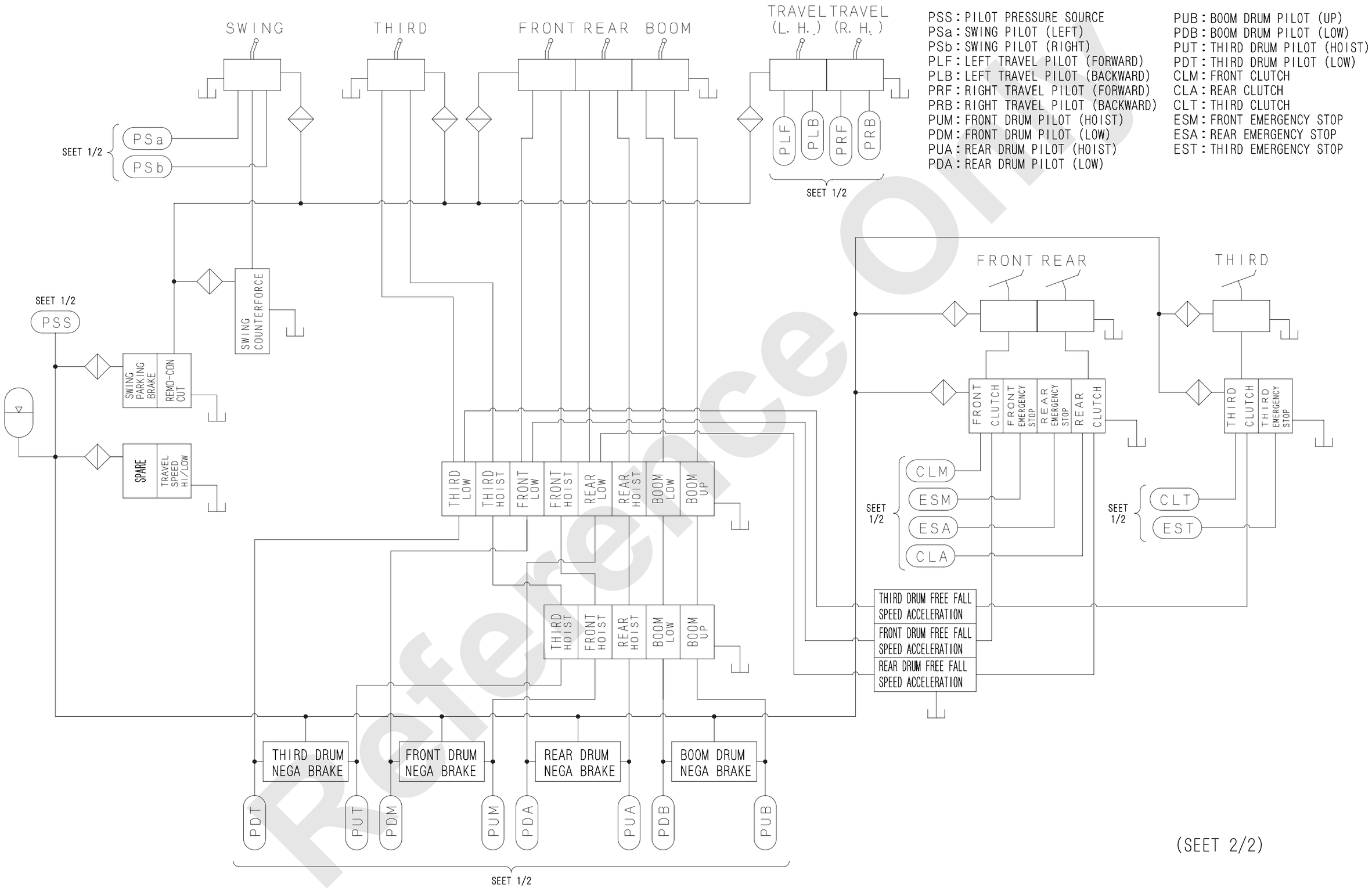

Reference Only

(2/2)

2. WITHOUT FREE FALL

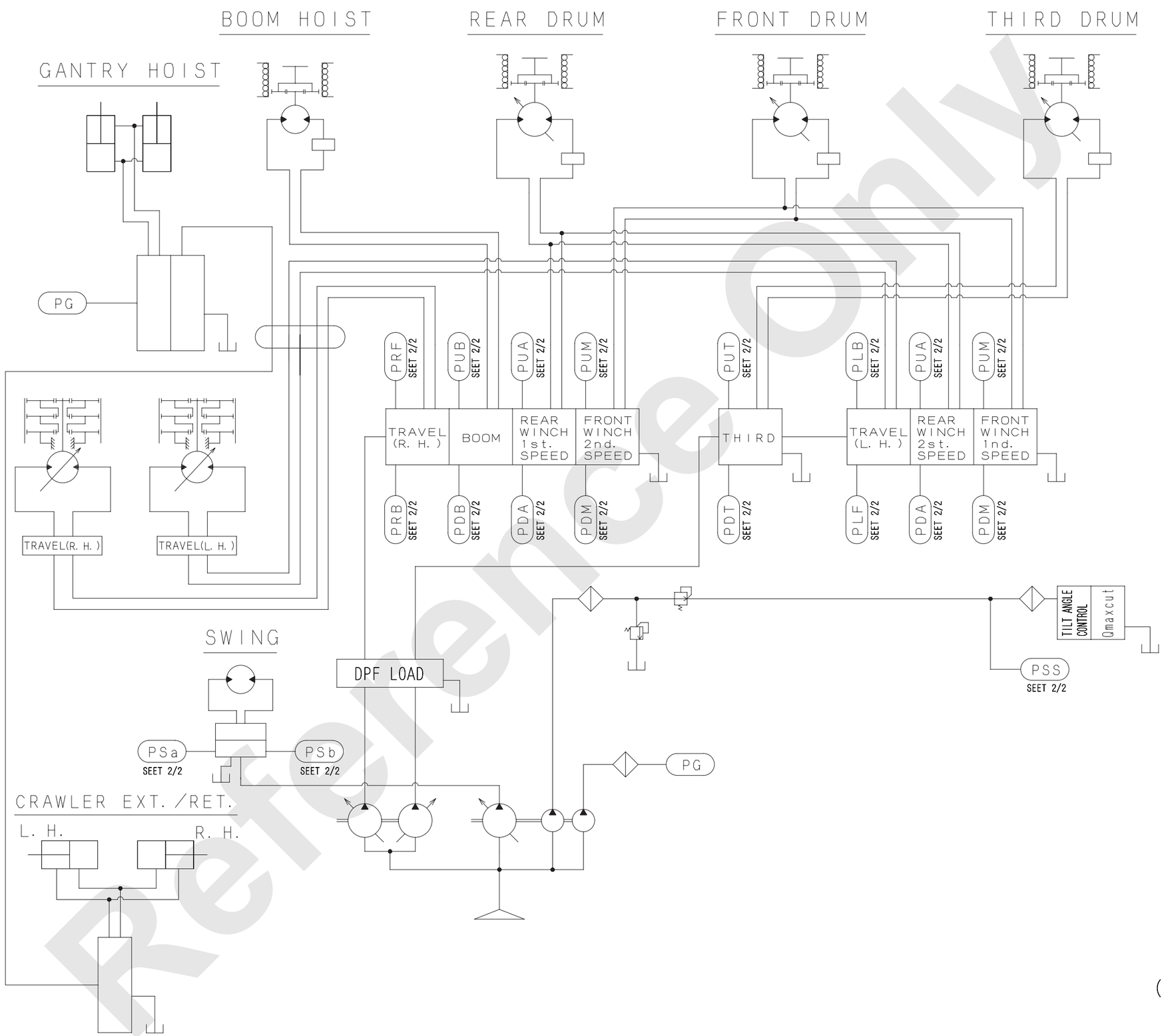

(1/2)

Reference Only

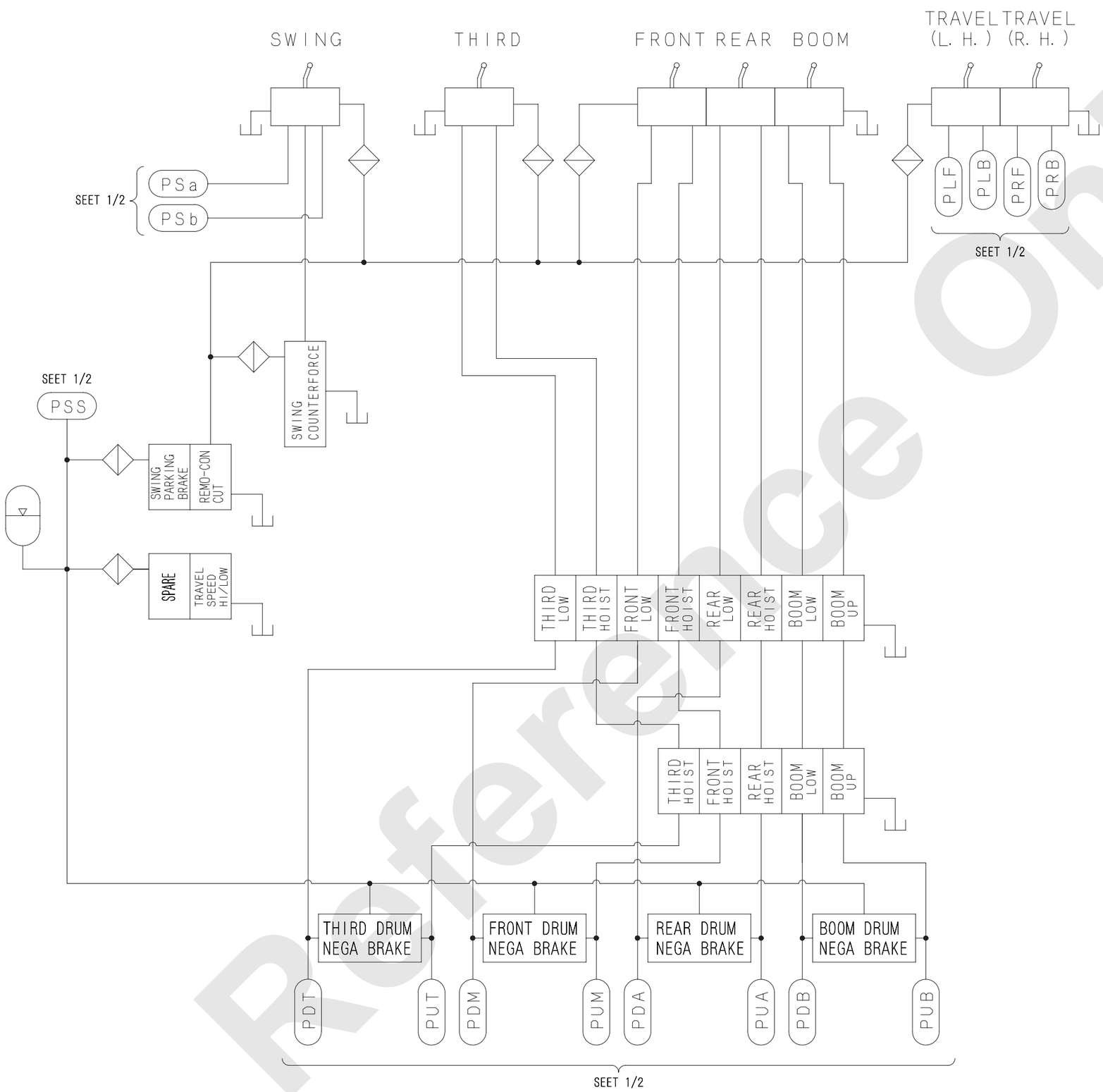

PSS : PILOT PRESSURE SOURCE
PSa : SWING PILOT (LEFT)
PSb : SWING PILOT (RIGHT)
PLF : LEFT TRAVEL PILOT (FORWARD)
PLB : LEFT TRAVEL PILOT (BACKWARD)
PRF : RIGHT TRAVEL PILOT (FORWARD)
PRB : RIGHT TRAVEL PILOT (BACKWARD)
PUM : FRONT DRUM PILOT (HOIST)
PDM : FRONT DRUM PILOT (LOW)
PUA : REAR DRUM PILOT (HOIST)
PDA : REAR DRUM PILOT (LOW)
PUB : BOOM DRUM PILOT (UP)
PDB : BOOM DRUM PILOT (LOW)
PUT : THIRD DRUM PILOT (HOIST)
PDT : THIRD DRUM PILOT (LOW)

(SEET 2/2)

(2/2)

Reference Only

9.2 ELECTRIC SCHEMATIC

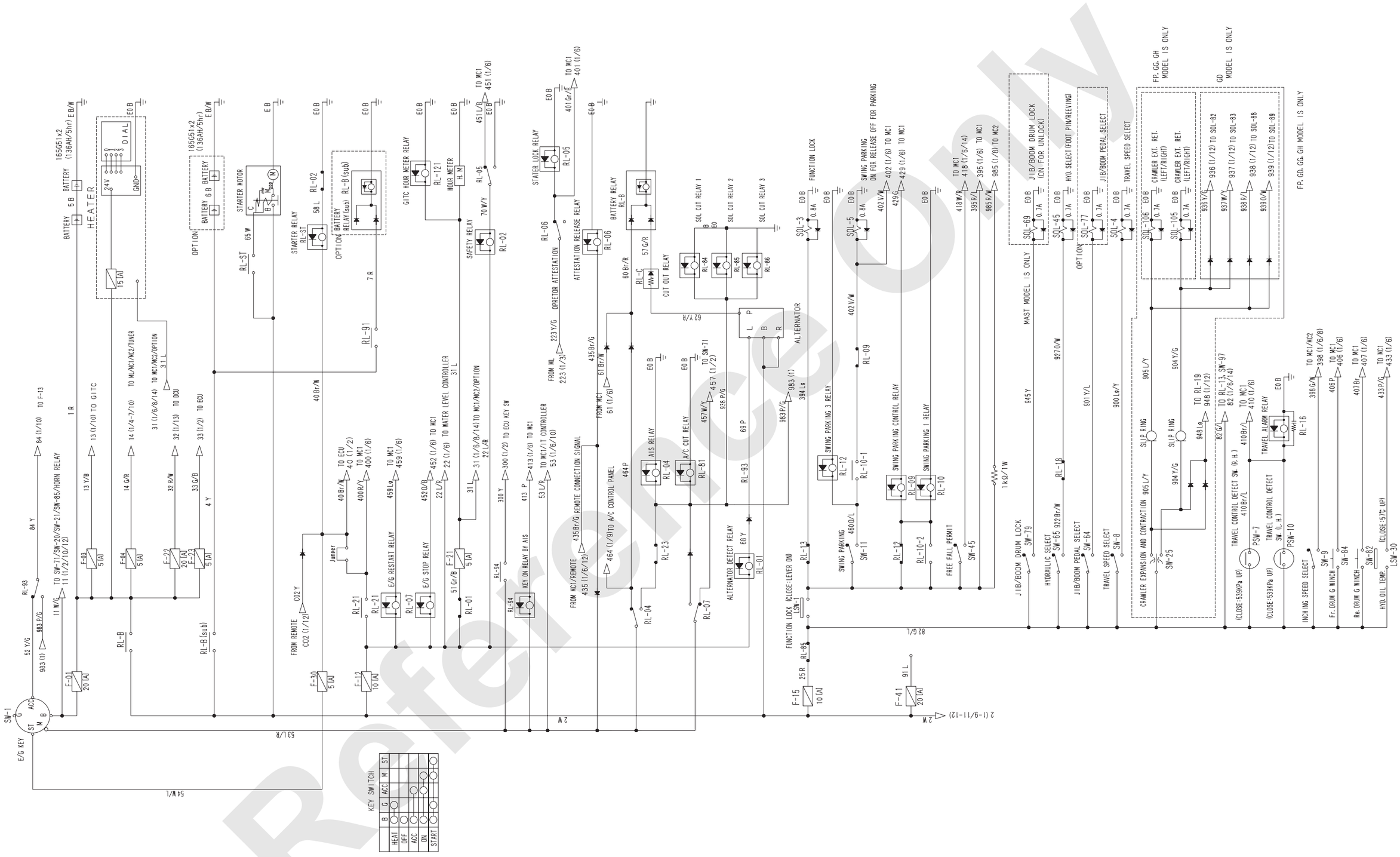

(1/21)

Reference Only

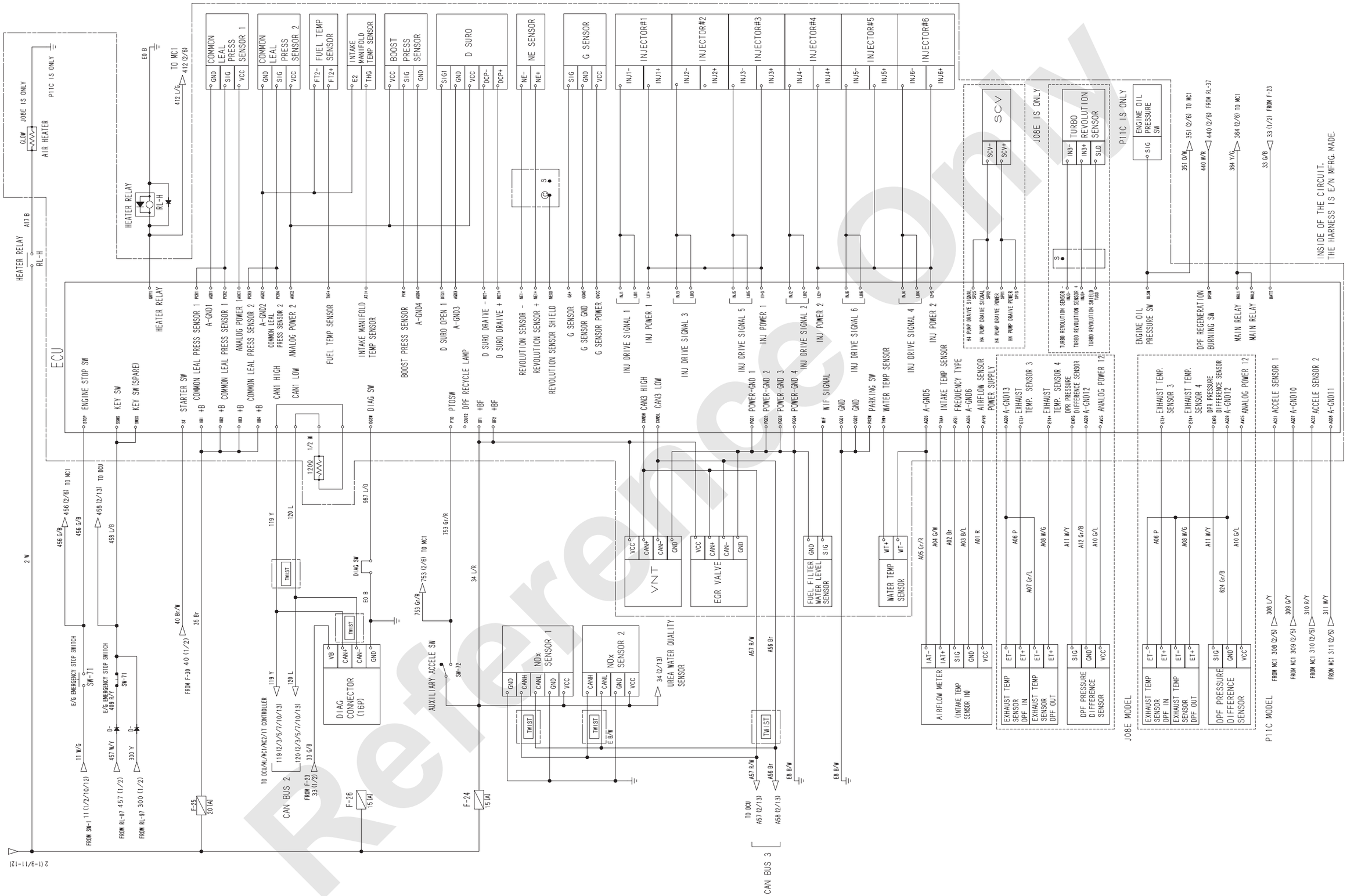

(2/21)

Reference Only

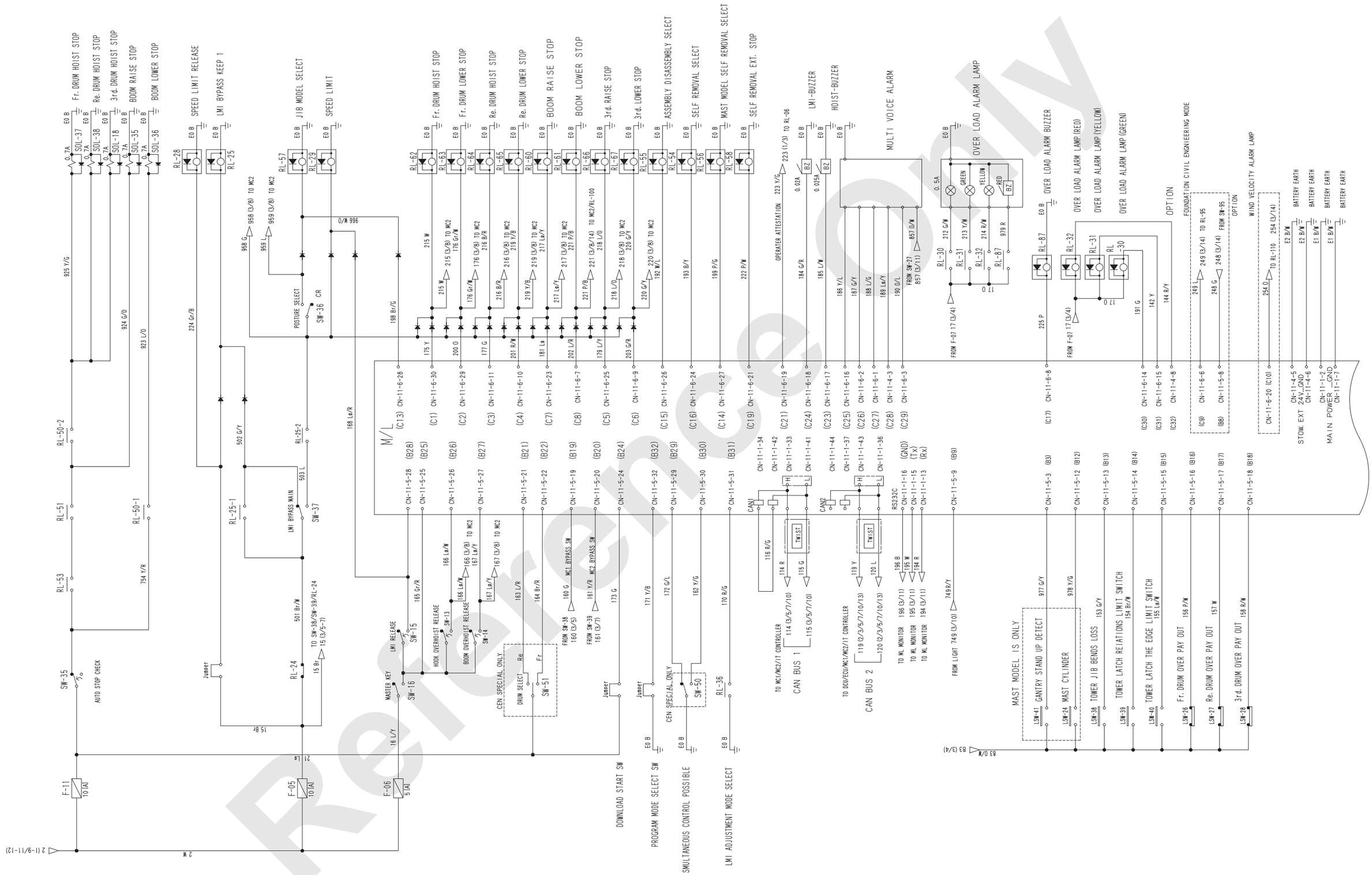
Fr. DRUM HOIST STOP
Re. DRUM HOIST STOP
3rd. DRUM HOIST STOP
BOOM RAISE STOP
BOOM LOWER STOP
SPEED LIMIT RELEASE
LMI BYPASS KEEP 1
J1B MODEL SELECT
SPEED LIMIT
Fr. DRUM HOIST STOP
Fr. DRUM LOWER STOP
Re. DRUM HOIST STOP
Re. DRUM LOWER STOP
BOOM RAISE STOP
BOOM LOWER STOP
3rd. RAISE STOP
3rd. LOWER STOP
ASSEMBLY DISASSEMBLY SELECT
SELF REMOVAL SELECT
MAST MODEL SELF REMOVAL SELECT
SELF REMOVAL EXT. STOP
LMI-BUZZER
HOIST-BUZZER
MULTI VOICE ALARM
OVER LOAD ALARM LAMP
OVER LOAD ALARM BUZZER
OVER LOAD ALARM LAMP (RED)
OVER LOAD ALARM LAMP (YELLOW)
OVER LOAD ALARM LAMP (GREEN)
OPTION
FOUNDATION CIVIL ENGINEERING MODE
WIND VELOCITY ALARM LAMP
BATTERY EARTH
STOW. EXT 24V_GND
MAIN POWER _GND
AUTO STOP CHECK
POSTURE SELECT
LMI BYPASS MAIN
LMI RELEASE
MASTER KEY
HOOK OVERHOIST RELEASE
BOOM OVERHOIST RELEASE
CEN SPECIAL ONLY
DRUM SELECT
DOWNLOAD START SW
PROGRAM MODE SELECT SW
SIMULTANEOUS CONTROL POSSIBLE
LMI ADJUSTMENT MODE SELECT
CAN BUS 1
CAN BUS 2
MAST MODEL IS ONLY
GANTRY STAND UP DETECT
MAST CYLINDER
TOWER J1B BENDS LOSS
TOWER LATCH REIATIONS LIMIT SWITCH
TOWER LATCH THE EDGE LIMIT SWITCH
Fr. DRUM OVER PAY OUT
Re. DRUM OVER PAY OUT
3rd. DRUM OVER PAY OUT

(3/21)

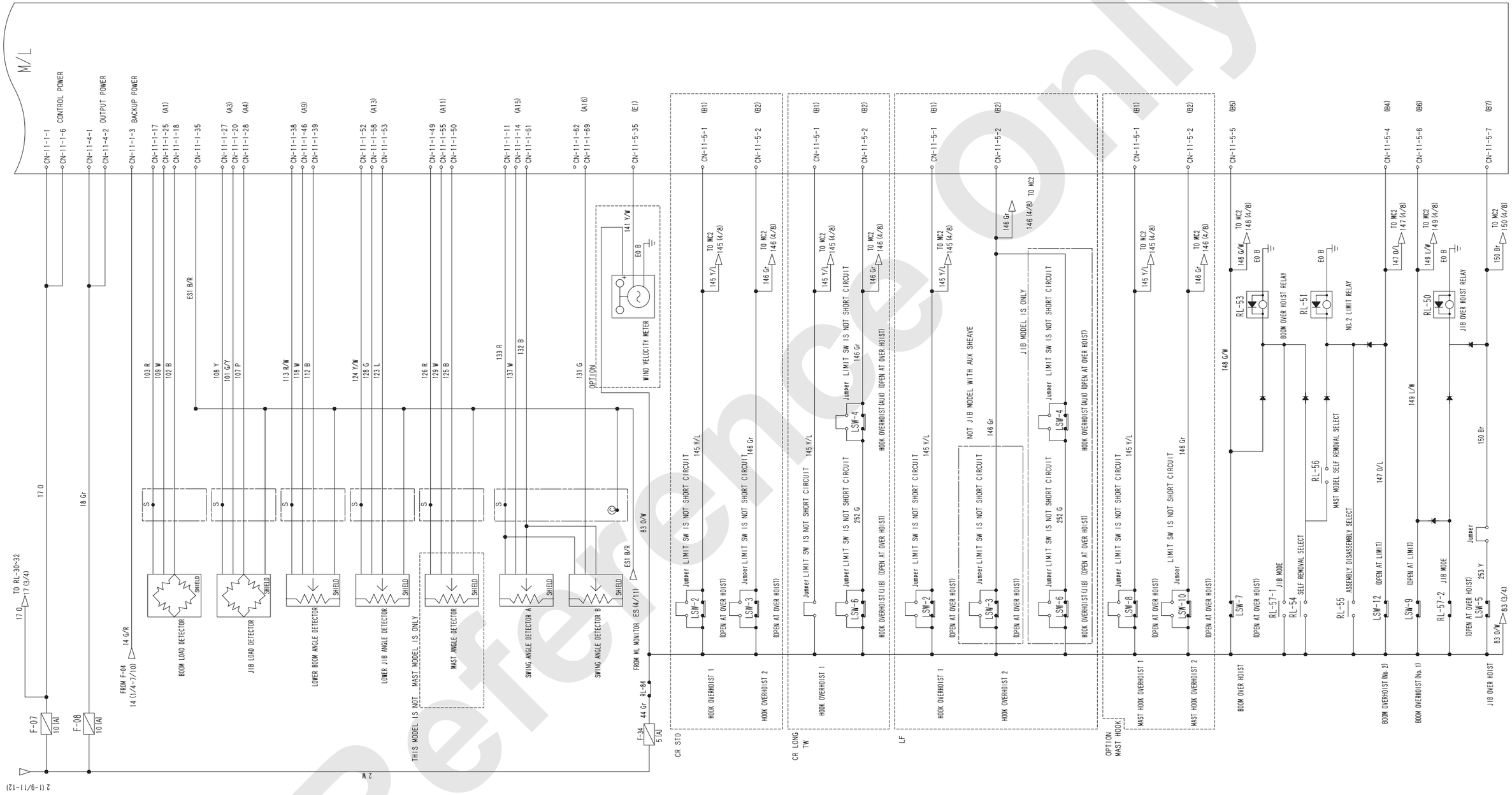
M/L
CONTROL POWER
OUTPUT POWER
BACKUP POWER
ES1 B/R
WIND VELOCITY METER
OPTION
BOOM LOAD DETECTOR
J1B LOAD DETECTOR
LOWER BOOM ANGLE DETECTOR
LOWER J1B ANGLE DETECTOR
MAST ANGLE DETECTOR
SWING ANGLE DETECTOR A
SWING ANGLE DETECTOR B
SHIELD
THIS MODEL IS NOT MAST MODEL IS ONLY
FROM ML MONITOR ES3 (4/11)
FROM F-04 14 (1/4~7/10)
TO RL-30~32 17 (3/4)
F-07 10 [A]
F-08 10 [A]
F-34 5 [A]
RL-84
HOOK OVERHOIST 1
HOOK OVERHOIST 2
CR STD
CR LONG TW
LF
OPTION MAST HOOK
MAST HOOK OVERHOIST 1
MAST HOOK OVERHOIST 2
BOOM OVER HOIST
BOOM OVERHOIST No. 2
BOOM OVERHOIST No. 1
J1B OVER HOIST
Jumper LIMIT SW IS NOT SHORT CIRCUIT
(OPEN AT OVER HOIST)
HOOK OVERHOIST(AUX) (OPEN AT OVER HOIST)
HOOK OVERHOIST(J1B) (OPEN AT OVER HOIST)
NOT J1B MODEL WITH AUX SHEAVE
J1B MODEL IS ONLY
BOOM OVER HOIST RELAY
NO.2 LIMIT RELAY
J1B OVER HOIST RELAY
MAST MODEL SELF REMOVAL SELECT
ASSEMBLY DISASSEMBLY SELECT
SELF REMOVAL SELECT
J1B MODE
(OPEN AT LIMIT)
TO MC2

(4/21)

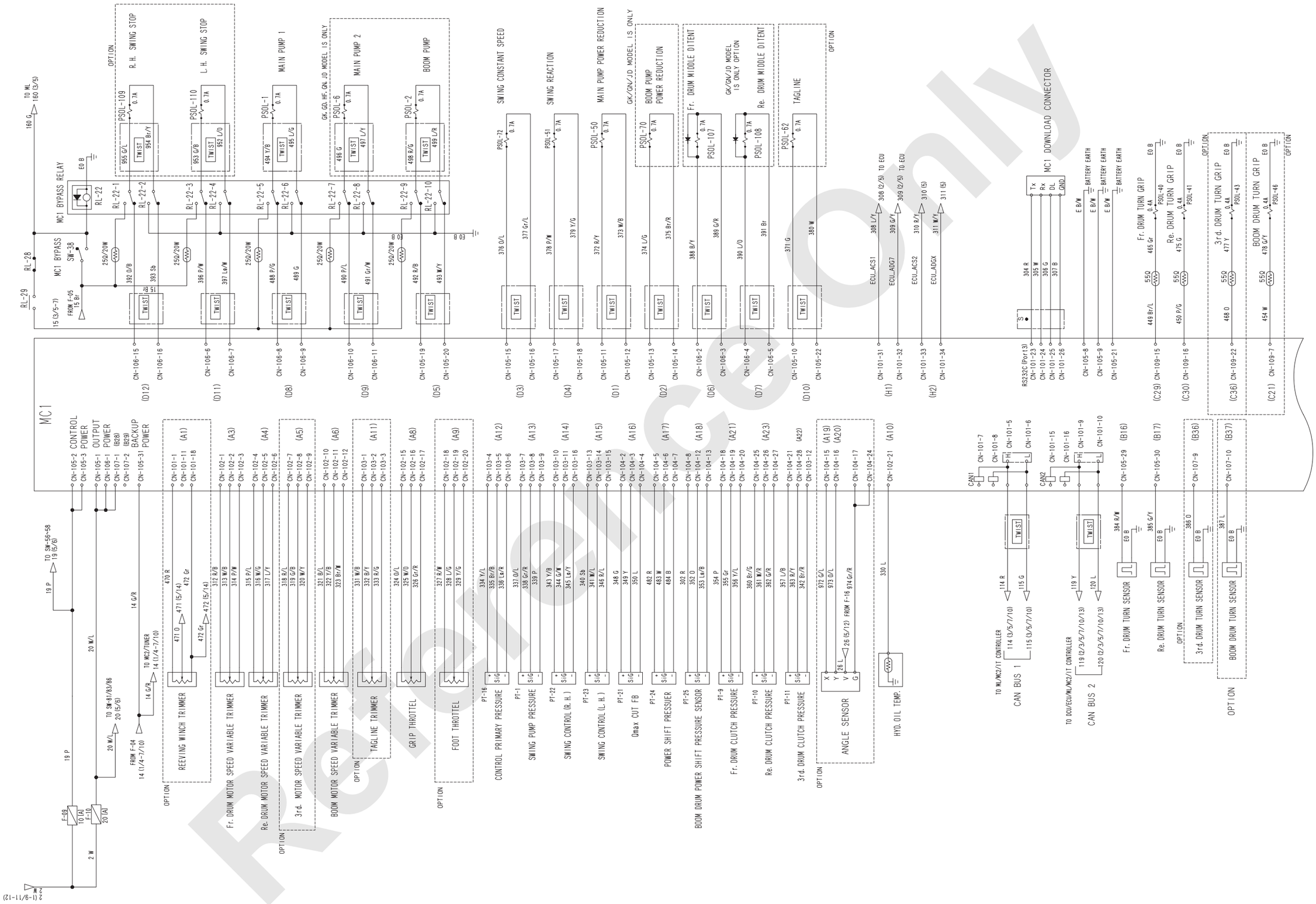

Reference Only

(5/21)

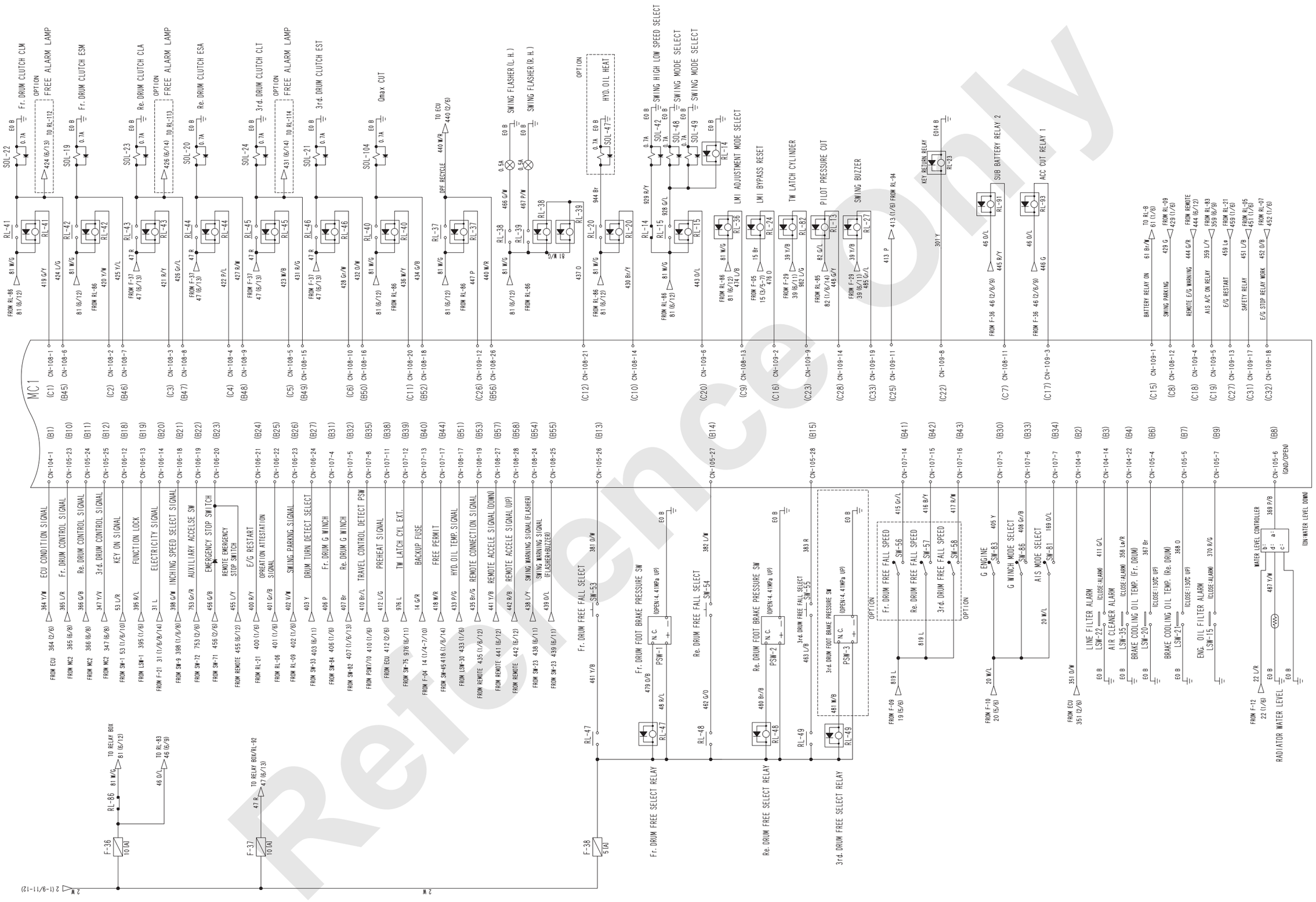
MC1
ECU CONDITION SIGNAL
Fr. DRUM CONTROL SIGNAL
Re. DRUM CONTROL SIGNAL
3rd. DRUM CONTROL SIGNAL
KEY ON SIGNAL
FUNCTION LOCK
ELECTRICITY SIGNAL
INCHING SPEED SELECT SIGNAL
AUXILIARY ACCELSE SW
EMERGENCY STOP SWITCH
REMOTE EMERGENCY STOP SWITCH
E/G RESTART
OPREATION ATTESTATION SIGNAL
SWING PARKING SIGNAL
DRUM TURN DETECT SELECT
Fr. DRUM G WINCH
Re. DRUM G WINCH
TRAVEL CONTROL DETECT PSW
PREHEAT SIGNAL
TW LATCH CYL EXT.
BACKUP FUSE
FREE PERMIT
HYD. OIL TEMP. SIGNAL
REMOTE CONNECTION SIGNAL
REMOTE ACCELE SIGNAL (DOWN)
REMOTE ACCELE SIGNAL (UP)
SWING WARNING SIGNAL (FLASHER)
SWING WARNING SIGNAL (FLASHER-BUZZER)
Fr. DRUM FREE FALL SELECT
Fr. DRUM FOOT BRAKE PRESSURE SW
Fr. DRUM FREE SELECT RELAY
Re. DRUM FREE FALL SELECT
Re. DRUM FOOT BRAKE PRESSURE SW
Re. DRUM FREE SELECT RELAY
3rd. DRUM FREE FALL SELECT
3rd. DRUM FOOT BRAKE PRESSURE SW
3rd. DRUM FREE SELECT RELAY
OPTION
Fr. DRUM FREE FALL SPEED
Re. DRUM FREE FALL SPEED
3rd. DRUM FREE FALL SPEED
G ENGINE
G WINCH MODE SELECT
AIS MODE SELECT
LINE FILTER ALARM
AIR CLEANER ALARM
BRAKE COOLING OIL TEMP. (Fr. DRUM)
BRAKE COOLING OIL TEMP. (Re. DRUM)
ENG. OIL FILTER ALARM
WATER LEVEL CONTROLLER
RADIATOR WATER LEVEL
(ON:WATER LEVEL DOWN)
Fr. DRUM CLUTCH CLM
Fr. DRUM CLUTCH ESM
Re. DRUM CLUTCH CLA
Re. DRUM CLUTCH ESA
3rd. DRUM CLUTCH CLT
3rd. DRUM CLUTCH EST
FREE ALARM LAMP
Qmax CUT
QPF RECYCLE
SWING FLASHER (L. H.)
SWING FLASHER (R. H.)
HYD. OIL HEAT
SWING HIGH LOW SPEED SELECT
SWING MODE SELECT
LMI ADJUSTMENT MODE SELECT
LMI BYPASS RESET
TW LATCH CYLINDER
PILOT PRESSURE CUT
SWING BUZZER
KEY RETURN RELAY
SUB BATTERY RELAY 2
ACC CUT RELAY 1
BATTERY RELAY ON
SWING PARKING
REMOTE E/G WARNING
AIS A/C ON RELAY
E/G RESTART
SAFETY RELAY
E/G STOP RELAY WORK

(6/21)

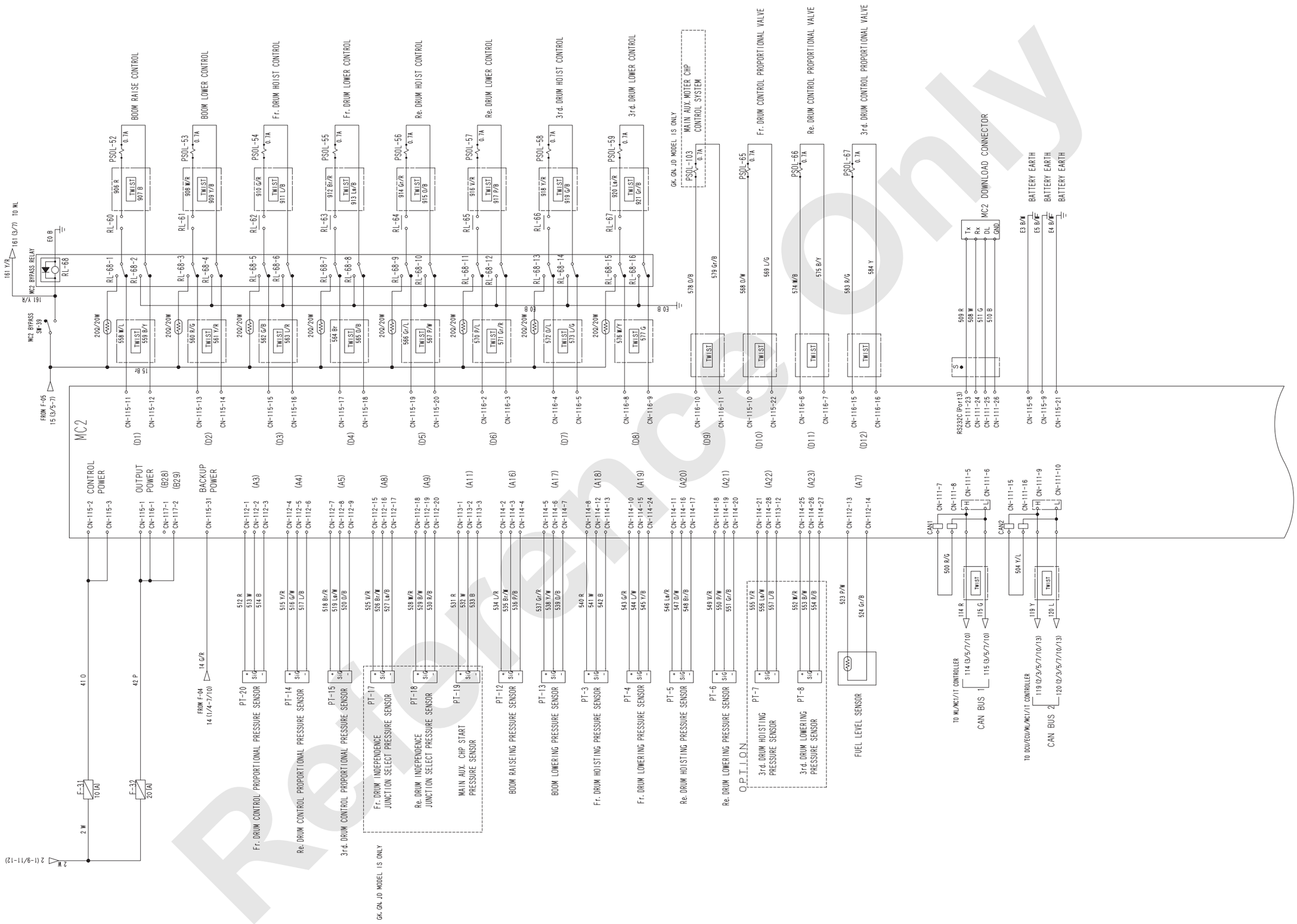

(7/21)

Reference Only

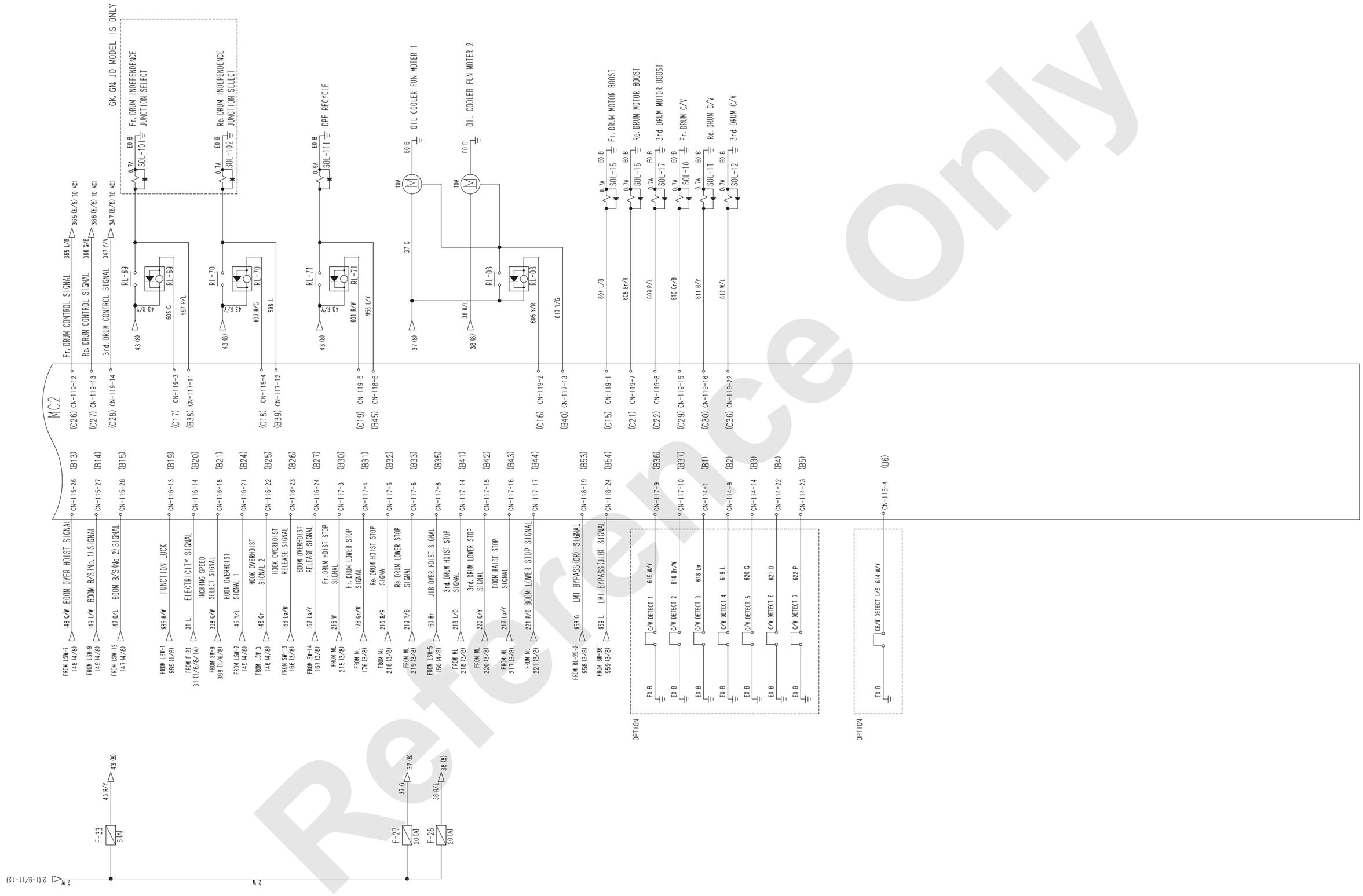
GK. GN. JD MODEL IS ONLY
Fr. DRUM INDEPENDENCE JUNCTION SELECT
Re. DRUM INDEPENDENCE JUNCTION SELECT
DPF RECYCLE
OIL COOLER FUN MOTER 1
OIL COOLER FUN MOTER 2
Fr. DRUM MOTOR BOOST
Re. DRUM MOTOR BOOST
3rd. DRUM MOTOR BOOST
Fr. DRUM C/V
Re. DRUM C/V
3rd. DRUM C/V
Fr. DRUM CONTROL SIGNAL
Re. DRUM CONTROL SIGNAL
3rd. DRUM CONTROL SIGNAL
MC2
BOOM OVER HOIST SIGNAL
BOOM B/S (No. 1) SIGNAL
BOOM B/S (No. 2) SIGNAL
FUNCTION LOCK
ELECTRICITY SIGNAL
INCHING SPEED SELECT SIGNAL
HOOK OVERHOIST SIGNAL 1
HOOK OVERHOIST SIGNAL 2
HOOK OVERHOIST RELEASE SIGNAL
BOOM OVERHOIST RELEASE SIGNAL
Fr. DRUM HOIST STOP SIGNAL
Fr. DRUM LOWER STOP SIGNAL
Re. DRUM HOIST STOP SIGNAL
Re. DRUM LOWER STOP SIGNAL
J1B OVER HOIST SIGNAL
3rd. DRUM HOIST STOP SIGNAL
3rd. DRUM LOWER STOP SIGNAL
BOOM RAISE STOP SIGNAL
BOOM LOWER STOP SIGNAL
LM1 BYPASS(GR) SIGNAL
LM1 BYPASS(UB) SIGNAL
OPTION
C/W DETECT 1
C/W DETECT 2
C/W DETECT 3
C/W DETECT 4
C/W DETECT 5
C/W DETECT 6
C/W DETECT 7
CB/W DETECT L/S
F-33 5 [A]
F-27 20 [A]
F-28 20 [A]

(8/21)

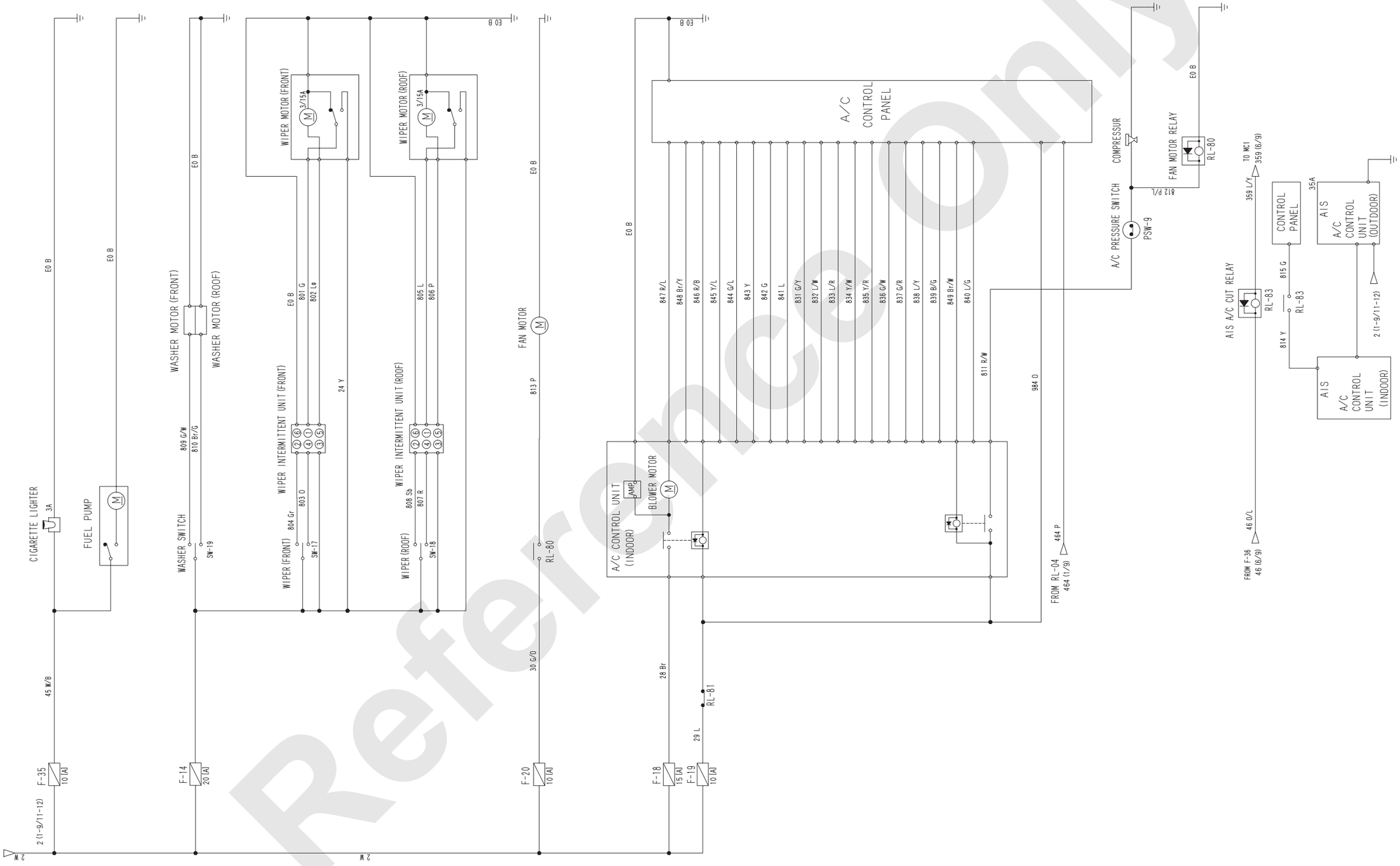

Reference Only

(9/21)

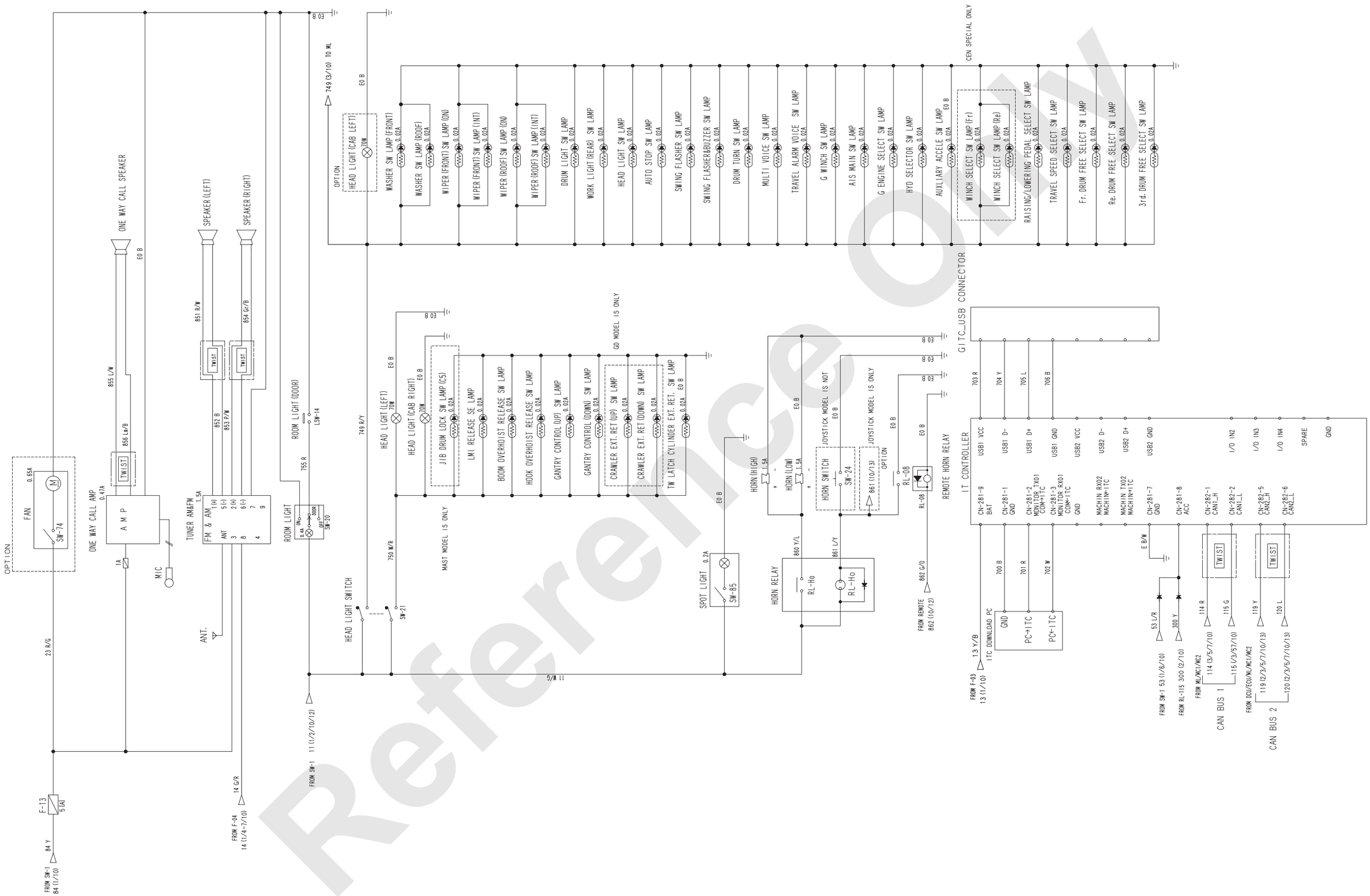
OPTION
FAN
SW-74
ONE WAY CALL AMP
0.47A
A M P
ONE WAY CALL SPEAKER
SPEAKER(LEFT)
SPEAKER(RIGHT)
MIC
TUNER AM&FM
FM & AM
ANT.
ROOM LIGHT
ROOM LIGHT(DOOR)
SW-20
HEAD LIGHT SWITCH
SW-21
HEAD LIGHT(LEFT)
HEAD LIGHT(CAB RIGHT)
J1B DRUM LOCK SW LAMP (C5)
LM1 RELEASE SE LAMP
BOOM OVERHOIST RELEASE SW LAMP
HOOK OVERHOIST RELEASE SW LAMP
GANTRY CONTROL (UP) SW LAMP
GANTRY CONTROL (DOWN) SW LAMP
CRAWLER EXT. RET (UP) SW LAMP
CRAWLER EXT. RET (DOWN) SW LAMP
TW LATCH CYLINDER EXT. RET. SW LAMP
GD MODEL IS ONLY
MAST MODEL IS ONLY
SPOT LIGHT
SW-85
HORN(HIGH)
HORN(LOW)
HORN SWITCH
SW-24
JOYSTICK MODEL IS NOT
JOYSTICK MODEL IS ONLY
HORN RELAY
RL-Ho
REMOTE HORN RELAY
RL-08
FROM REMOTE
862 (10/12)
OPTION
HEAD LIGHT(CAB LEFT)
WASHER SW LAMP(FRONT)
WASHER SW LAMP(ROOF)
WIPER(FRONT) SW LAMP(ON)
WIPER(FRONT) SW LAMP(INT)
WIPER(ROOF) SW LAMP(ON)
WIPER(ROOF) SW LAMP(INT)
DRUM LIGHT SW LAMP
WORK LIGHT(REAR) SW LAMP
HEAD LIGHT SW LAMP
AUTO STOP SW LAMP
SWING FLASHER SW LAMP
SWING FLASHER&BUZZER SW LAMP
DRUM TURN SW LAMP
MULTI VOICE SW LAMP
TRAVEL ALARM VOICE SW LAMP
G WINCH SW LAMP
AIS MAIN SW LAMP
G ENGINE SELECT SW LAMP
HYD SELECTOR SW LAMP
AUXILIARY ACCELE SW LAMP
CEN SPECIAL ONLY
WINCH SELECT SW LAMP(Fr)
WINCH SELECT SW LAMP(Re)
RAISING/LOWERING PEDAL SELECT SW LAMP
TRAVEL SPEED SELECT SW LAMP
Fr. DRUM FREE SELECT SW LAMP
Re. DRUM FREE SELECT SW LAMP
3rd. DRUM FREE SELECT SW LAMP
GITC_USB CONNECTOR
ITC CONTROLLER
USB1 VCC
USB1 D-
USB1 D+
USB1 GND
USB2 VCC
USB2 D-
USB2 D+
USB2 GND
I/O IN2
I/O IN3
I/O IN4
SPARE
GND
CN-281-9 BAT
CN-281-1 GND
CN-281-2 MONITOR TX01 COM+ITC
CN-281-3 MONITOR RX01 COM+ITC
GND
MACHIN RX02 MACHIN+ITC
MACHIN TX02 MACHIN+ITC
CN-281-7 GND
CN-281-8 ACC
CN-282-1 CAN1_H
CN-282-2 CAN1_L
CN-282-5 CAN2_H
CN-282-6 CAN2_L
ITC DOWNLOAD PC
GND
PC→ITC
PC←ITC
CAN BUS 1
CAN BUS 2
FROM F-03 13 (1/10)
FROM SW-1 53 (1/6/10)
FROM RL-115 300 (2/10)
FROM ML/MC1/MC2 114 (3/5/7/10) 115 (/3/5/7/10)
FROM DCU/ECU/ML/MC1/MC2 119 (2/3/5/7/10/13) 120 (2/3/5/7/10/13)
FROM SW-1 84 (1/10)
F-13 5 (A)
FROM F-04 14 (1/4-7/10)
FROM SW-1 11 (1/2/10/12)
749 (3/10) TO ML
Reference Only

(10/21)

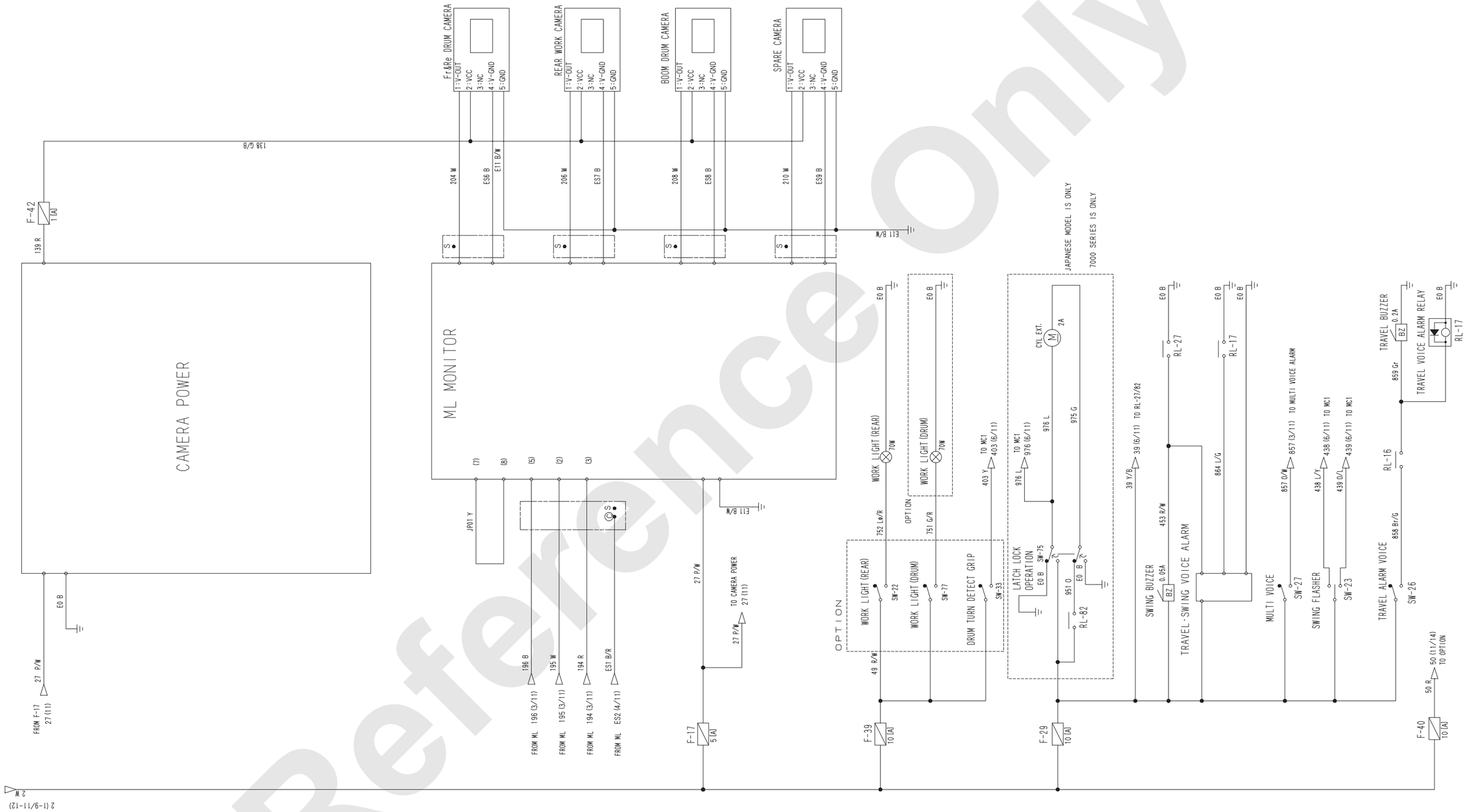

Reference Only

(11/21)

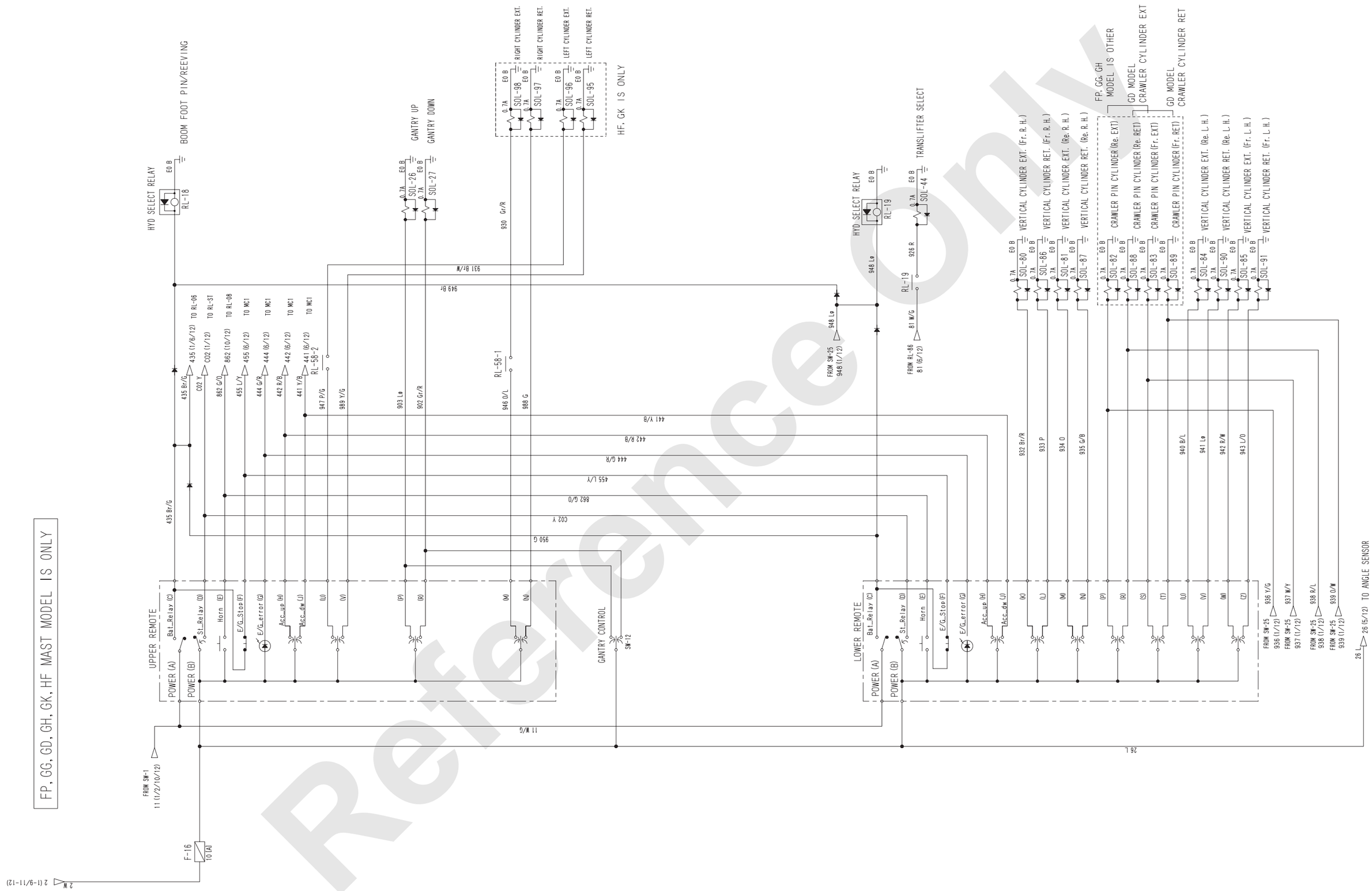
FP, GG, GD, GH, GK, HF MAST MODEL IS ONLY
HYD SELECT RELAY
RL-18
BOOM FOOT PIN/REEVING
GANTRY UP
GANTRY DOWN
SOL-26
SOL-27
SOL-98
SOL-97
SOL-96
SOL-95
RIGHT CYLINDER EXT.
RIGHT CYLINDER RET.
LEFT CYLINDER EXT.
LEFT CYLINDER RET.
HF, GK IS ONLY
RL-58-1
RL-58-2
HYD SELECT RELAY
RL-19
TRANSLIFTER SELECT
SOL-44
FROM SW-25 948 (1/12)
FROM RL-86 81 (6/12)
VERTICAL CYLINDER EXT. (Fr. R. H.)
VERTICAL CYLINDER RET. (Fr. R. H.)
VERTICAL CYLINDER EXT. (Re. R. H.)
VERTICAL CYLINDER RET. (Re. R. H.)
SOL-80
SOL-86
SOL-81
SOL-87
FP, GG, GH MODEL IS OTHER
GD MODEL CRAWLER CYLINDER EXT
GD MODEL CRAWLER CYLINDER RET
CRAWLER PIN CYLINDER (Re. EXT)
CRAWLER PIN CYLINDER (Re. RET)
CRAWLER PIN CYLINDER (Fr. EXT)
CRAWLER PIN CYLINDER (Fr. RET)
SOL-82
SOL-88
SOL-83
SOL-89
VERTICAL CYLINDER EXT. (Re. L. H.)
VERTICAL CYLINDER RET. (Re. L. H.)
VERTICAL CYLINDER EXT. (Fr. L. H.)
VERTICAL CYLINDER RET. (Fr. L. H.)
SOL-84
SOL-90
SOL-85
SOL-91
UPPER REMOTE
POWER (A)
POWER (B)
Bat_Relay (C)
St_Relay (D)
Horn (E)
E/G_Stop (F)
E/G_error (G)
Acc_up (H)
Acc_dw (J)
GANTRY CONTROL
SW-12
LOWER REMOTE
FROM SW-25 936 (1/12)
FROM SW-25 937 (1/12)
FROM SW-25 938 (1/12)
FROM SW-25 939 (1/12)
26 (5/12) TO ANGLE SENSOR
FROM SW-1 11 (1/2/10/12)
F-16 10 [A]
2 (1-9/11-12)

(12/21)

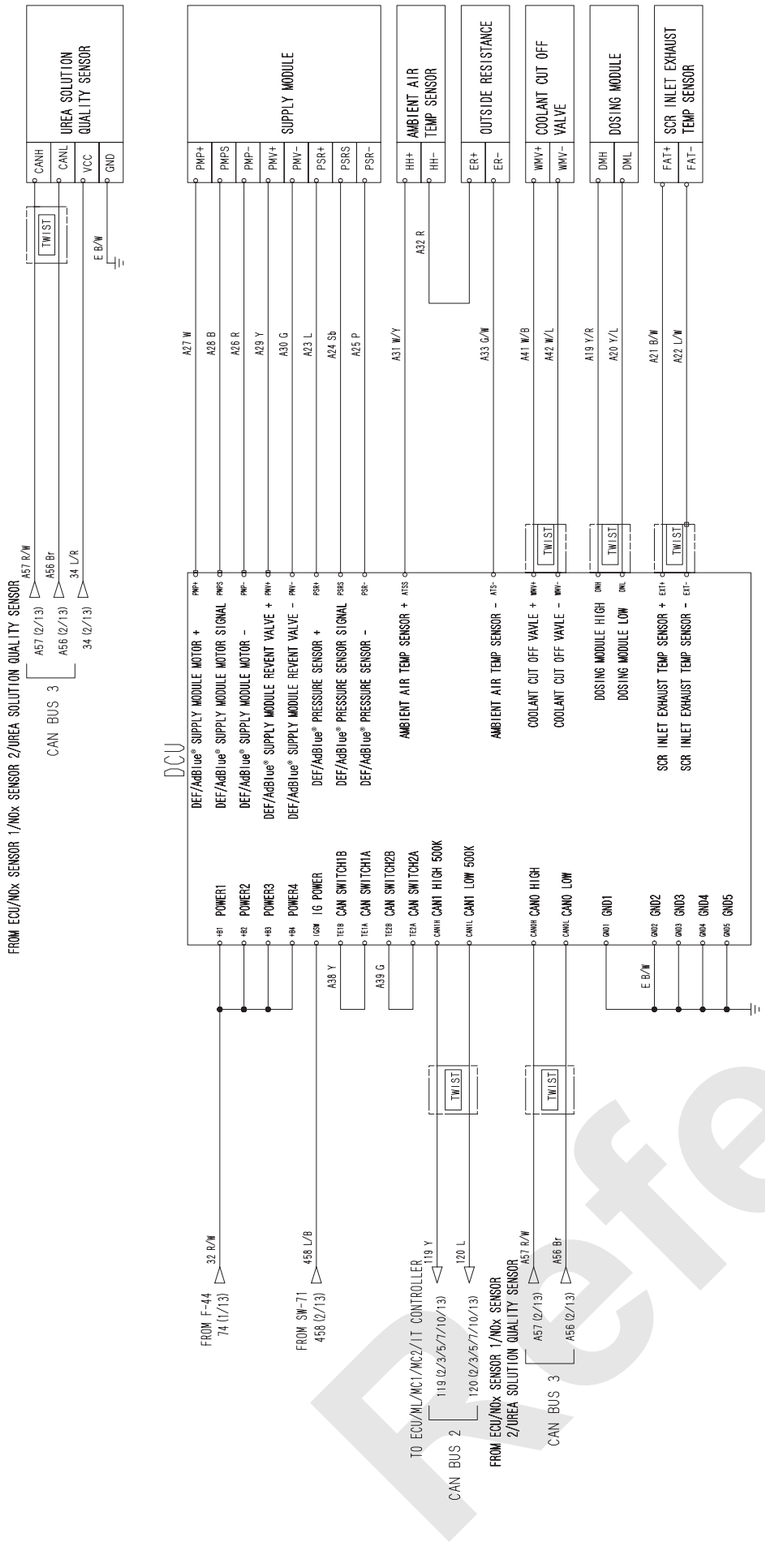

Reference Only

(13/21)

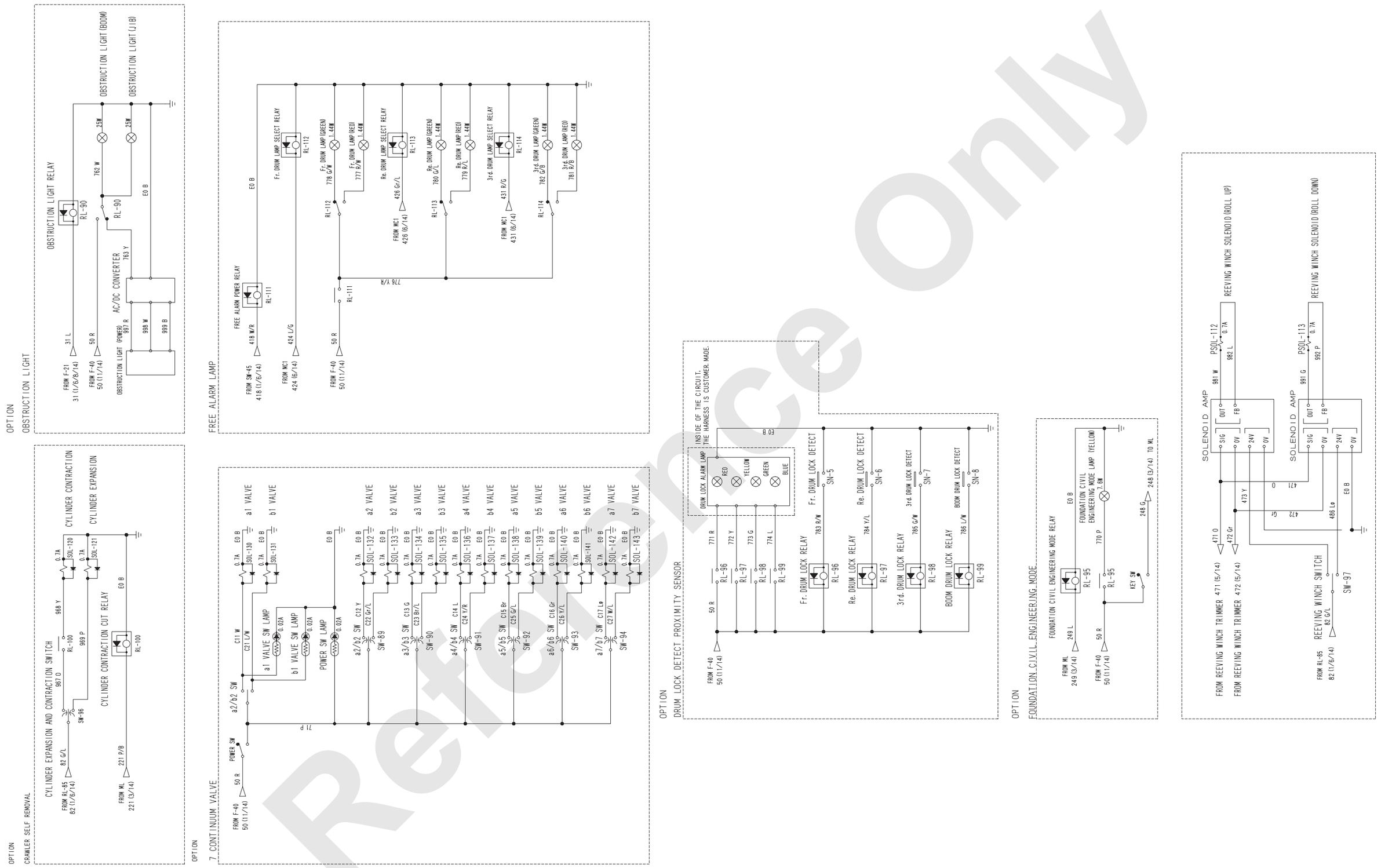

Reference Only

(14/21)

RELAY

RL-NO.	COIL SHEET No.	TERMINAL SHEET No.	TYPE	U S E	KOBELCO PART NO.
RL-B (sub)	1	1	N. O.	BATTERY RELAY (sub)	EZ24S00027F1
RL-B	1	1	N. O.	BATTERY RELAY	EZ24S00027F1
RL-Ho	10	10	N. O.	HORN RELAY	GG24S00009P1
RL-C	1		N. O.	CUT OUT RELAY	(27730-1050)
RL-H	2	2	N. O.	HEATER RELAY	(28620-1430)
RL-ST	1	1	N. O.	STARTER RELAY	(28410-1292)
RL-01	1	1	N. C.	ALTERNATOR DETECT RELAY	GG24E00038F1
RL-02	1	1	N. C.	SAFETY RELAY	EN24S00008P1
RL-03	8	8	N. O.	OIL COOLER MOTOR	EN24S00008P1
RL-04	1	1	N. C.	AIS RELAY	GG24E00038F1
RL-05	1	1	N. C.	STATER LOCK RELAY	GG24E00038F1
RL-06	1	1	N. C.	ATTESTATION RELEASE RELAY	GG24E00038F1
RL-07	1	1	N. O. N. C.	E/G STOP RELAY	GG24E00038F1
RL-08	10	10	N. O.	REMOTE HORN RELAY	GG24E00038F1
RL-09	1	1	N. C.	SWING PARKING CONTROL RELAY	GG24E00038F1
RL-10	1			SWING PARKING 1 RELAY	GG24E00038F1
RL-10-1		1	N. O.	SWING PARKING 1	
RL-10-2		1	N. O.	SWING PARKING 2	
RL-12	1	1	N. C.	SWING PARKING 3 RELAY	GG24E00038F1
RL-13	6	1	N. C.	PILOT PRESSURE CUT	GG24E00038F1

RELAY

RL-NO.	COIL SHEET No.	TERMINAL SHEET No.	TYPE	U S E	KOBELCO PART NO.
RL-14	6	6	N. C.	SWING HIGH LOW SPEED SELECT	GG24E00038F1
RL-15	6	6	N. O.	SWING NEUTRAL BRAKE SELECT	GG24E00038F1
RL-16	1	11	N. O.	TRAVEL ALARM RELAY	GG24E00038F1
RL-17	11	11	N. O.	TRAVEL VOICE ALARM RELAY	GG24E00038F1
RL-18	12	1	N. C.	HYD SELECT RELAY	GG24E00038F1
RL-19	12	12	N. O.	HYD SELECT RELAY	GG24E00038F1
RL-20	6	6	N. O.	HYD. OIL HEAT	GG24E00038F1
RL-21	1	1	N. O.	E/G RESTART RELAY	EN24S00008P1
RL-22	5			MC1 BYPASS RELAY	GG24E00038F1
RL-22-1		5	N. O. N. C.	MC1 BYPASS RELAY	
RL-22-2		5	N. O. N. C.	MC1 BYPASS RELAY	
RL-22-3		5	N. O. N. C.	MC1 BYPASS RELAY	
RL-22-4		5	N. O. N. C.	MC1 BYPASS RELAY	
RL-22-5		5	N. O. N. C.	MC1 BYPASS RELAY	
RL-22-6		5	N. O. N. C.	MC1 BYPASS RELAY	
RL-22-7		5	N. O. N. C.	MC1 BYPASS RELAY	
RL-22-8		5	N. O. N. C.	MC1 BYPASS RELAY	
RL-22-9		5	N. O. N. C.	MC1 BYPASS RELAY	
RL-22-10		5	N. O. N. C.	MC1 BYPASS RELAY	
RL-23	1	1	N. C.	KEY RETURN RELAY	GG24E00038F1

RELAY

RL-NO.	COIL SHEET No.	TERMINAL SHEET No.	TYPE	U S E	KOBELCO PART NO.
RL-24	6	3	N. C.	LMI BYPASS RESET	GG24E00038F1
RL-25	3			LMI BYPASS KEEP 1	GG24E00038F1
RL-25-1		3	N. O.	LMI BYPASS KEEP 1	
RL-25-2		3	N. O.	LMI BYPASS KEEP 2	
RL-27	6	11	N. O.	SWING BUZZER	GG24E00038F1
RL-28	3	5	N. C.	SPEED LIMIT RELEASE	GG24E00038F1
RL-29	3	5	N. O.	SPEED LIMIT	GG24E00038F1
RL-30	3	3	N. O.	OVERLOAD ALARM LAMP (GREEN)	GG24E00038F1
RL-31	3	3	N. O.	OVERLOAD ALARM LAMP (YELLOW)	GG24E00038F1
RL-32	3	3	N. O.	OVERLOAD ALARM LAMP (RED)	GG24E00038F1
RL-36	6	3	N. O.	LMI ADJUSTMENT MODE SELECT	GG24E00038F1
RL-37	6	6	N. O.	DPF RECYCLE RELAY	GG24E00038F1
RL-38	6	6	N. O.	SWING FLASHER (L. H.) RELAY	GG24E00038F1
RL-39	6	6	N. O.	SWING FLASHER (R. H.) RELAY	GG24E00038F1
RL-40	6	6	N. O.	Qmax CUT RELAY	GG24E00038F1
RL-41	6	6	N. O.	CLM RELAY	GG24E00038F1
RL-42	6	6	N. O.	ESM RELAY	GG24E00038F1
RL-43	6	6	N. O.	CLA RELAY	GG24E00038F1
RL-44	6	6	N. O.	ESA RELAY	GG24E00038F1
RL-45	6	6	N. O.	CLT RELAY	GG24E00038F1

Reference Only

(15/21)

RELAY

RL-NO.	COIL SHEET No.	TERMINAL SHEET No.	TYPE	U S E	KOBELCO PART NO.
RL-46	6	6	N.O.	EST RELAY	GG24E00038F1
RL-47	6	6	N.O.	Fr. DRUM FREE SELECT RELAY	GG24E00038F1
RL-48	6	6	N.O.	Re. DRUM FREE SELECT RELAY	GG24E00038F1
RL-49	6	6	N.O.	3rd. DRUM FREE SELECT RELAY	GG24E00038F1
RL-50	4			JIB OVER HOIST RELAY	GG24E00038F1
RL-50-1		3	N.O.	JIB OVER HOIST RELAY	
RL-50-2		3	N.O.	JIB OVER HOIST RELAY	
RL-51	4	3	N.O.	NO. 2 LIMIT RELAY	GG24E00038F1
RL-53	4	3	N.O.	BOOM OVER HOIST RELAY	GG24E00038F1
RL-54	3	4	N.O.	SELF REMOVAL SELECT	GG24E00038F1
RL-55	3	4	N.O.	ASSEMBLY DISASSEMBLY SELECT	GG24E00038F1
RL-56	3	4	N.O.	MAST MODEL SELF REMOVAL SELECT	GG24E00038F1
RL-57	3			JIB MODEL SELECT	GG24E00038F1
RL-57-1		4	N.O.	JIB MODE	
RL-57-2		4	N.C.	JIB MODE	
RL-58	3			SELF REMOVAL EXT. STOP	GG24E00038F1
RL-58-1		12	N.O.	SELF REMOVAL EXT. STOP	
RL-58-2		12	N.O.	SELF REMOVAL EXT. STOP	
RL-60	3	7	N.O.	RAISING/LOWERING RAISE STOP	GG24E00036F1
RL-61	3	7	N.O.	RAISING/LOWERING LOWER STOP	GG24E00036F1

RELAY

RL-NO.	COIL SHEET No.	TERMINAL SHEET No.	TYPE	U S E	KOBELCO PART NO.
RL-62	3	7	N.O.	Fr. DRUM HOIST STOP	GG24E00036F1
RL-63	3	7	N.O.	Fr. DRUM LOWER STOP	GG24E00036F1
RL-64	3	7	N.O.	Re. DRUM HOIST STOP	GG24E00036F1
RL-65	3	7	N.O.	Re. DRUM LOWER STOP	GG24E00036F1
RL-66	3	7	N.O.	3rd. DRUM HOIST STOP	GG24E00036F1
RL-67	3	7	N.O.	3rd. DRUM LOWER STOP	GG24E00036F1
RL-68	7			MC2 BYPASS RELAY	GG24E00036F1
RL-68-1		7	N.O. N.C.	MC2 BYPASS RELAY	
RL-68-2		7	N.O. N.C.	MC2 BYPASS RELAY	
RL-68-3		7	N.O. N.C.	MC2 BYPASS RELAY	
RL-68-4		7	N.O. N.C.	MC2 BYPASS RELAY	
RL-68-5		7	N.O. N.C.	MC2 BYPASS RELAY	
RL-68-6		7	N.O. N.C.	MC2 BYPASS RELAY	
RL-68-7		7	N.O. N.C.	MC2 BYPASS RELAY	
RL-68-8		7	N.O. N.C.	MC2 BYPASS RELAY	
RL-68-9		7	N.O. N.C.	MC2 BYPASS RELAY	
RL-68-10		7	N.O. N.C.	MC2 BYPASS RELAY	
RL-68-11		7	N.O. N.C.	MC2 BYPASS RELAY	
RL-68-12		7	N.O. N.C.	MC2 BYPASS RELAY	
RL-68-13		7	N.O. N.C.	MC2 BYPASS RELAY	

RELAY

RL-NO.	COIL SHEET No.	TERMINAL SHEET No.	TYPE	U S E	KOBELCO PART NO.
RL-68-14		7	N.O. N.C.	MC2 BYPASS RELAY	GG24E00036F1
RL-68-15		7	N.O. N.C.	MC2 BYPASS RELAY	
RL-68-16		7	N.O. N.C.	MC2 BYPASS RELAY	
RL-69	8	8	N.O.	Fr. DRUM INDEPENDENCE JUNCTION SELECT RELAY	GG24E00036F1
RL-70	8	8	N.O.	Re. DRUM INDEPENDENCE JUNCTION SELECT RELAY	GG24E00036F1
RL-71	8	8	N.O.	DPR LOAD MULTIPLIED RELAY	EN24S00008P1
RL-79	1	1	N.O.	INJECTOR COOLING FAN MOTOR RELAY	EN24S00008P1
RL-80	9	9	N.O.	FAN MOTOR RELAY	EN24S00008P1
RL-81	1	9	N.C.	A/C CUT RELAY	EN24S00008P1
RL-82	6	11	N.O.	TW LATCH CYLINDER	EN24S00008P1
RL-83	9	9	N.O.	AIS A/C CUT RELAY	EN24S00008P1
RL-84	6	4	N.C.	SOL CUT RELAY 1	EN24S00008P1
RL-85	6	1	N.C.	SOL CUT RELAY 2	EN24S00008P1
RL-86	6	6	N.C.	SOL CUT RELAY 3	EN24S00008P1
RL-87	3	3	N.O.	OVER LOAD ALARM BUZZER	EN24S00008P1
RL-90	14	14	N.C.	OBSTRUCTION LIGHT RELAY	EN24S00008P1
RL-91	6	1	N.O.	SUB BATTERY RELAY 2	EN24S00008P1
RL-93	1	1	N.C.	ACC CUT RELAY 1	EN24S00008P1
RL-94	6	1	N.O.	ACC CUT RELAY 2	EN24S00008P1

Reference only

(16/21)

RELAY

RL-NO.	COIL SHEET No.	TERMINAL SHEET No.	TYPE	U S E	KOBELCO PART NO.
RL-95	14	14	N.O.	FOUNDATION CIVIL ENGINEERING MODE RELAY	EN24S00008P1
RL-96	14	14	N.O.	Fr. DRUM LOCK RELAY	EN24S00008P1
RL-97	14	14	N.O.	Re. DRUM LOCK RELAY	EN24S00008P1
RL-98	14	14	N.O.	3rd. DRUM LOCK RELAY	EN24S00008P1
RL-99	14	14	N.O.	BOOM DRUM LOCK RELAY	EN24S00008P1
RL-100	14	14	N.O.	CYLINDER CONTRACTION CUT RELAY	EN24S00008P1
RL-106	12	12	N.C.	LEFT CYLINDER RET. CUT RELAY	EN24S00008P1
RL-107	12	12	N.C.	RIGHT CYLINDER EXT. CUT RELAY	EN24S00008P1
RL-108	12	12	N.C.	LEFT CYLINDER EXT. CUT RELAY	EN24S00008P1
RL-109	12	12	N.C.	RIGHT CYLINDER RET. CUT RELAY	EN24S00008P1
RL-110	14	14	N.O.	WIND VELOCITY ALARM LAMP RELAY	EN24S00008P1
RL-111	13	14	N.O.	FREE ALARM POWER RELAY	EN24S00008P1
RL-112	14	14	N.C.	Fr. DRUM LAMP SELECT RELAY	EN24S00008P1
RL-113	14	14	N.C.	Re. DRUM LAMP SELECT RELAY	EN24S00008P1
RL-114	14	14	N.C.	3rd. DRUM LAMP SELECT RELAY	EN24S00008P1
RL-115	6	2	N.O.	ENGINE RELAY	EN24S00008P1
RL-116	6	2	N.O.	OPERATION RECOVERY RELAY	EZ24S00008P1
RL-120	6	1	N.C.	GITC RETURN RELAY	EN24S00008P1
RL-121	1	10	N.O.	GITC HOUR METER RELAY	EZ24S00008P1

FUSE

F-NO.	RATED [A]	U S E	SHEET NO.	KOBELCO PART NO.
F-01	20	ELECTRIC POWER SOURCE	1	GG73E00005F2
F-02	5	POWER SUPPLY-VOLTAGE WATCH	1	GG73E00005F2
F-03	5	ITC POWER SOURCE	1	GG73E00005F2
F-04	5	BACK-UP	1	GG73E00005F2
F-05	10	BYPASS SWITCH	3	GG73E00005F2
F-06	5	RELEASE SWITCH	3	GG73E00005F2
F-07	10	LMI CONTROL POWER	4	GG73E00005F2
F-08	10	LMI OUTPUT POWER	4	GG73E00005F2
F-09	10	MC1 CONTROL POWER	5	GG73E00005F2
F-10	20	MC1 OUTPUT POWER	5	GG73E00005F2
F-11	10	AUTO STOP	3	GG73E00005F2
F-12	10	ENGINE CONDITION	1	GG73E00005F2
F-13	5	ONE WAY/RADIO	10	GG73E00005F2
F-14	20	WIPER	9	GG73E00005F2
F-15	10	FUNCTION LOCK	1	GG73E00005F2
F-16	10	REMOTE CONTROL	12	GG73E00005F2
F-17	5	MONITOR	11	GG73E00005F2
F-18	15	A/C	9	GG73E00005F2
F-19	10	A/C 2	9	GG73E00005F2
F-20	10	FAN MOTOR	9	GG73E00005F2

FUSE

F-NO.	RATED [A]	U S E	SHEET NO.	KOBELCO PART NO.
F-21	5	GENERATION OF ELECTRICITY SENSOR	1	GG73E00005F2
F-22	20	DCU POWER SOURCE	2	JL73E01001P1
F-23	5	ECU POWER SOURCE	1	JL73E01001P1
F-24	15	ECU (+BF)	2	GG73E00005F2
F-25	20	ECU (+B)	2	GG73E00005F2
F-26	15	ECU	2	GG73E00005F2
F-27	20	OIL COOLER FAN MOTOR 1	8	GG73E00005F2
F-28	20	OIL COOLER FAN MOTOR 2	8	GG73E00005F2
F-29	10	SWING FLASHER/VOICE ALARM	11	GG73E00005F2
F-30	5	STARTER	1	GG73E00005F2
F-31	10	MC2 CONTROL POWER	7	GG73E00005F2
F-32	20	MC2 OUTPUT POWER	7	GG73E00005F2
F-33	5	MC2 EARTH OUTPUT POWER	8	GG73E00005F2
F-34	5	OVERHOIST L/S	4	GG73E00005F2
F-35	10	FUEL PUMP/CIGARETTE LIGHTER	9	GG73E00005F2
F-36	10	MC1 EARTH OUTPUT POWER 1	6	GG73E00005F2
F-37	10	MC1 EARTH OUTPUT POWER 2	6	GG73E00005F2
F-38	5	NEUTRAL FREE	6	GG73E00005F2
F-39	10	LIGHT	11	GG73E00005F2
F-40	10	SPARE	11	GG73E00005F2

Reference Only

(17/21)

FUSE

F-NO.	RATED [A]	U S E	SHEET NO.	KOBELCO PART NO.
F-41	20	USER	1	2479Z2812D9
F-42	1	CAMERA PAWER	11	2479Z2812D1
F-43	3	WIND VELOCITY ALARM LAMP	14	JL73E01001P1

SOLENOID VALVE

SOL-NO.	U S E	SHEET NO.	KOBELCO PART NO.
SOL-3	FUNCTION LOCK	1	YN35V00027F2
SOL-4	TRAVEL SPEED SELECT	1	YN35V00027F2
SOL-5	SWING PARKING ON FOR RELEASE OFF FOR PARKING	1	YN35V00027F2
SOL-10	Fr. DRUM C/V	8	JJ35V00010F2
SOL-11	Re. DRUM C/V	8	JJ35V00010F2
SOL-12	3rd. DRUM C/V	8	YN35V00050F1
SOL-15	Fr. DRUM MOTOR BOOST	8	GG15V00015F1
SOL-16	Re. DRUM MOTOR BOOST	8	GG15V00015F1
SOL-17	3rd. DRUM MOTOR BOOST	8	GG15V00015F1
SOL-18	3rd. RAISE STOP	3	YN35V00050F1
SOL-19	Fr. DRUM CLUTCH ESM	6	JJ35V00008F1
SOL-20	Re. DRUM CLUTCH ESA	6	JJ35V00008F1
SOL-21	3rd. DRUM CLUTCH EST	6	GG35V00014F1
SOL-22	Fr. DRUM CLUTCH CLM	6	JJ35V00008F1
SOL-23	Re. DRUM CLUTCH CLA	6	JJ35V00008F1
SOL-24	3rd. DRUM CLUTCH CLT	6	GG35V00014F1
SOL-26	GANTRY UP	12	JJ30V00024F1
SOL-27	GANTRY DOWN	12	JJ30V00024F1
SOL-35	BOOM RAISE STOP	3	JJ35V00009F2

SOLENOID VALVE

SOL-NO.	U S E	SHEET NO.	KOBELCO PART NO.
SOL-36	BOOM LOWER STOP	3	JJ35V00009F2
SOL-37	Fr. DRUM HOIST STOP	3	JJ35V00009F2
SOL-38	Re. DRUM HOIST STOP	3	JJ35V00009F2
SOL-42	SWING HIGH LOW SPEED SELECT	6	YN35V00027F2
SOL-44	TRANSLIFTER SELECT	12	JJ30V00024F1
SOL-45	HYD. SELECT (FOOT PIN/REEVING)	1	JJ30V00024F1
SOL-47	HYD. OIL HEAT	6	GG27V00001F1
SOL-48	SWING NEUTRAL SELECT	6	GB15V00004F1
SOL-49	SWING NEUTRAL SELECT	6	GB15V00004F1
SOL-69	JIB RAISING/LOWERING DRUM LOCK (ON FOR UNLOCK)	1	EE35V00007F1
SOL-77	RAISING/LOWERING PEDAL	1	EN35V00038F1
SOL-80	VERTICAL CYLINDER EXT. (Fr. R. H.)	12	JJ30V00015F3
SOL-81	VERTICAL CYLINDER EXT. (Re. R. H.)	12	JJ30V00015F3
SOL-82	CRAWLER PIN CYLINDER (Re. EXT)	12	JJ30V00015F3
SOL-83	CRAWLER PIN CYLINDER (Fr. EXT)	12	JJ30V00015F3
SOL-84	VERTICAL CYLINDER EXT. (Re. L. H.)	12	JJ30V00015F3
SOL-85	VERTICAL CYLINDER EXT. (Fr. L. H.)	12	JJ30V00015F3
SOL-86	VERTICAL CYLINDER RET. (Fr. R. H.)	12	JJ30V00015F3
SOL-87	VERTICAL CYLINDER RET. (Re. R. H.)	12	JJ30V00015F3
SOL-88	CRAWLER PIN CYLINDER (Re. RET)	12	JJ30V00015F3

SOLENOID VALVE

SOL-NO.	U S E	SHEET NO.	KOBELCO PART NO.
SOL-89	CRAWLER PIN CYLINDER (Fr. RET)	12	JJ30V00015F3
SOL-90	VERTICAL CYLINDER RET. (Re. L. H.)	12	JJ30V00015F3
SOL-91	VERTICAL CYLINDER RET. (Fr. L. H.)	12	JJ30V00015F3
SOL-95	LEFT CYLINDER RET.	12	GG30V00035F2
SOL-96	LEFT CYLINDER EXT.	12	GG30V00035F2
SOL-97	RIGHT CYLINDER RET.	12	GG30V00035F2
SOL-98	RIGHT CYLINDER EXT.	12	GG30V00035F2
SOL-101	Fr. DRUM INDEPENDENCE JUNCTION SELECT	8	GG35V00015F1
SOL-102	Re. DRUM INDEPENDENCE JUNCTION SELECT	8	GG35V00015F1
SOL-104	Qmax CUT	6	GG35V000019F1
SOL-105	CRAWLER EXT. RET. (LEFT/RIGHT)	1	GG30V00041F1
SOL-106	CRAWLER EXT. RET. (LEFT/RIGHT)	1	GG30V00041F1
SOL-111	DPF RECYCLE	8	GG20V00025F1
SOL-120	CYLINDER CONTRACTION	14	GG30V00056F1
SOL-121	CYLINDER EXPANSION	14	GG30V00056F1
SOL-130	a1 VALVE	14	GG30V00038F1
SOL-131	b1 VALVE	14	GG30V00038F1
SOL-132	a2 VALVE	14	GG30V00038F1
SOL-133	b2 VALVE	14	GG30V00038F1
SOL-134	a3 VALVE	14	GG30V00038F1

Reference Only

(18/21)

SOLENOID VALVE			
SOL-NO.	U S E	SHEET NO.	KOBELCO PART NO.
SOL-135	b3 VALVE	14	GG30V00038F1
SOL-136	a4 VALVE	14	GG30V00038F1
SOL-137	b4 VALVE	14	GG30V00038F1
SOL-138	a5 VALVE	14	GG30V00038F1
SOL-139	b5 VALVE	14	GG30V00038F1
SOL-140	a6 VALVE	14	GG30V00038F1
SOL-141	b6 VALVE	14	GG30V00038F1
SOL-142	a7 VALVE	14	GG30V00038F1
SOL-143	b7 VALVE	14	GG30V00038F1

SOLENOID VALVE			
PSOL-NO.	U S E	SHEET NO.	KOBELCO PART NO.
PSOL-1	MAIN PUMP 1	5	GG35V00019F1
PSOL-2	BOOM PUMP	5	JD10V00003F1
PSOL-6	MAIN PUMP 2	5	GK35V00003F1
PSOL-40	Fr. DRUM TURN GRIP	6	GB50M01093F1
PSOL-41	Re. DRUM TURN GRIP	6	GB50M01093F1
PSOL-43	3rd. DRUM TURN GRIP	6	GB50M01093F1
PSOL-46	BOOM DRUM TURN GRIP	6	GB50M01093F1
PSOL-50	MAIN PUMP POWER REDUCTION	5	GG10V00025F1
PSOL-51	SWING REACTION	5	YM35V00001F2
PSOL-52	BOOM RAISE CONTROL	7	GG20V00017F3
PSOL-53	BOOM LOWER CONTROL	7	GG20V00017F3
PSOL-54	Fr. DRUM HOIST CONTROL	7	GG20V00017F3
PSOL-55	Fr. DRUM LOWER CONTROL	7	GG20V00017F3
PSOL-56	Re. DRUM HOIST CONTROL	7	GG20V00017F3
PSOL-57	Re. DRUM LOWER CONTROL	7	GG20V00017F3
PSOL-58	3rd. DRUM HOIST CONTROL	7	GG20V00017F3
PSOL-59	3rd. DRUM LOWER CONTROL	7	GG20V00017F3
PSOL-62	TAGLINE	5	GB22V00007F1
PSOL-65	Fr. DRUM CONTROL PROPORTIONAL VALVE	7	GG15V00015F1
PSOL-66	Re. DRUM CONTROL PROPORTIONAL VALVE	7	GG15V00015F1

SOLENOID VALVE			
PSOL-NO.	U S E	SHEET NO.	KOBELCO PART NO.
PSOL-67	3rd. DRUM CONTROL PROPORTIONAL VALVE	7	GG15V00015F1
PSOL-70	BOOM PUMP POWER REDUCTION	5	JD10V00003F1
PSOL-72	SWING CONSTANT SPEED	5	GG10V00015F2
PSOL-103	Fr. Re. MOTOR CHP CONTROL SYSTEM	7	GG35V00015F1
PSOL-107	Fr. DRUM MIDDLE DITENT	5	GG30V00042F1
PSOL-108	Re. DRUM MIDDLE DITENT	5	GG30V00042F1
PSOL-109	R.H. SWING STOP	5	EE35V00012F1
PSOL-110	L.H. SWING STOP	5	EE35V00012F1
PSOL-112	REEVING WINCH SOLENOID (ROLL UP)	14	
PSOL-113	REEVING WINCH SOLENOID (ROLL DOWN)	14	

SWITCH			
SW-NO.	U S E	SHEET NO.	KOBELCO PART NO.
SW-1	E/G KEY	1	YN50S00026F1
SW-8	TRAVEL SPEED SELECT	1	GG50S00061P2
SW-9	INCHING SPEED SELECT	1	(GG50M01032F1)
SW-11	SWING PARKING	1	(GB20E00001F3)
SW-12	GANTRY CONTROL	12	GG50S00071P2
SW-13	HOOK OVERHOIST RELEASE	3	GG50S00055P2
SW-14	BOOM OVERHOIST RELEASE	3	GG50S00054P2
SW-15	LMI RELEASE	3	GG50S00053P2
SW-16	MASTER KEY	3	JJ50S00015P1
SW-17	WIPER (FRONT)	9	GG50S00041P2
SW-18	WIPER (ROOF)	9	GG50S00042P2
SW-19	WASHER SWITCH	9	GG50S00040P2
SW-20	ROOM LIGHT	10	2456R315
SW-21	HEAD LIGHT SWITCH	10	GG50S00043P2
SW-22	WORK LIGHT (REAR)	11	GG50S00064P2
SW-23	SWING FLASHER	11	GG50S00046P2
SW-24	HORN SWITCH	10	(GB20E00001F3)
SW-25	CRAWLER EXPANSION AND CONTRACTION	1	GG50S00066P2
SW-26	TRAVEL ALARM VOICE	11	GG50S00033P2
SW-27	MULTI VOICE	11	GG50S00034P2

Reference Only

(19/21)

SWITCH			
SW-NO.	U S E	SHEET NO.	KOBELCO PART NO.
SW-33	DRUM TURN DETECT GRIP	11	GG50S00032P2
SW-35	AUTO STOP CHECK	3	GG50S00045P2
SW-36	POSTURE SELECT	3	GG50S00073P1
SW-37	LMI BYPASS MAIN	3	GG50S00073P1
SW-38	MC1 BYPASS	5	2479Z2872
SW-39	MC2 BYPASS	7	2479Z2872
SW-45	FREE FALL PERMIT	1	GG50S00005P1
SW-50	SMULTANEOUS CONTROL POSSIBLE	3	JJ50S00005P1
SW-51	DRUM SELECT	3	GG50S00035P2
SW-53	Fr. DRUM FREE FALL SELECT	6	GG50E00006F5
SW-54	Re. DRUM FREE FALL SELECT	6	GG50E00006F5
SW-55	3rd. DRUM FREE FALL SELECT	6	GG50E00006F5
SW-56	Fr. DRUM FREE FALL SPEED	6	GG50S00056P2
SW-57	Re. DRUM FREE FALL SPEED	6	GG50S00057P2
SW-58	3rd. DRUM FREE FALL SPEED	6	GG50S00036P2
SW-64	RAISING/LOWERING PEDAL SELECT	1	GG50S00062P2
SW-65	HYDRAULIC SELECT	1	GG50S00059P2
SW-71	E/G EMERGENCY STOP SWITCH	2	GG50S00022P1
SW-72	AUXILIARY ACCELE SW	2	GG50S00044P2
SW-74	FAN	10	(EN75S00002P1)

SWITCH			
SW-NO.	U S E	SHEET NO.	KOBELCO PART NO.
SW-75	LATCH LOCK OPERATION	11	-
SW-77	WORK LIGHT (DRUM)	11	GG50S00063P2
SW-79	JIB RAISING/LOWERING DRUM LOCK	1	JD50S00001P1
SW-81	AIS MODE SELECT	6	GG50S00051P2
SW-82	Re. DRUM G WINCH	1	GG50E00006F5
SW-83	G ENGINE	6	GG50S00113P1
SW-84	Fr. DRUM G WINCH	1	GG50E00006F5
SW-85	SPOT LIGHT	10	-
SW-86	G WINCH MODE SELECT	6	GG50S00050P2
SW-87	POWER SW	14	GG50S00068P2
SW-88	a2/b2 SW	14	GG50S00069P1
SW-89	a2/b2 SW	14	GG50S00070P1
SW-90	a3/b3 SW	14	GG50S00070P1
SW-91	a4/b4 SW	14	GG50S00070P1
SW-92	a5/b5 SW	14	GG50S00070P1
SW-93	a6/b6 SW	14	GG50S00070P1
SW-94	a7/b7 SW	14	GG50S00070P1
SW-95	KEY SW	14	GG50S00074P1
SW-96	CYLINDER EXPANSION AND CONTRACTION SWITCH	14	FY50S00003P1
SW-97	REEVING WINCH SWITCH	14	XGG52S00018P1

LIMIT SWITCH			
LSW-NO.	U S E	SHEET NO.	KOBELCO PART NO.
LSW-1	FUNCTION LOCK	1	GG50S00065F1
LSW-2	HOOK OVERHOIST 1	4	24100N6192F5
LSW-3	HOOK OVERHOIST 2	4	24100N6192F5
LSW-4	HOOK OVERHOIST (AUX)	4	24100N6192F5
LSW-5	JIB OVER HOIST	4	GG50S00015D1
LSW-6	HOOK OVERHOIST (JIB)	4	24100N6192F5
LSW-7	BOOM OVER HOIST	4	GG50S00004P1
LSW-8	MAST HOOK OVERHOIST 1	4	24100N6192F5
LSW-9	BOOM OVERHOIST (No. 1)	4	GK50S00001P1
LSW-10	MAST HOOK OVERHOIST 2	4	24100N6192F5
LSW-12	BOOM OVERHOIST (No. 2)	4	GK50S00001P1
LSW-14	ROOM LIGHT (DOOR)	10	2479R638
LSW-15	ENG. OIL FILTER ALARM	6	-
LSW-20	BRAKE COOLING OIL TEMP. (Fr. DRUM)	6	GG50S00002D1
LSW-21	BRAKE COOLING OIL TEMP. (Re. DRUM)	6	GG50S00002D1
LSW-22	LINE FILTER ALARM	6	(GG50V00001F1)
LSW-24	MAST CYLINDER	4	GK50S00001P1
LSW-26	Fr. DRUM OVER PAY OUT	4	GG50S00013P1
LSW-27	Re. DRUM OVER PAY OUT	4	GG50S00013P1
LSW-28	3Th. DRUM OVER PAY OUT	4	GG50S00013P1

LIMIT SWITCH			
LSW-NO.	U S E	SHEET NO.	KOBELCO PART NO.
LSW-30	HYD. OIL TEMP.	1	GG50S00002D2
LSW-35	AIR CLEANER ALARM	6	-
LSW-38	TOWER JIB BENDS LOSS	4	GB50S00024D1
LSW-39	TOWER LATCH RELATIONS LIMIT SWITCH	4	GG50S00017D1
LSW-40	TOWER LATCH THE EDGE LIMIT SWITCH	4	GG50S00018D1
LSW-41	GANTRY STAND UP DETECT	4	GK50S00001P1

Reference Only

(20/21)

PRESSURE SWITCH

PSW-NO.	TYPE	U S E	SHEET NO.	KOBELCO PART NO.
PSW-1	N.C.	Fr. DRUM FOOT BRAKE PRESSURE SW	6	GG50S00006P1
PSW-2	N.C.	Re. DRUM FOOT BRAKE PRESSURE SW	6	GG50S00006P1
PSW-3	N.C.	3rd. DRUM FOOT BRAKE PRESSURE SW	6	GG50S00006P1
PSW-7	N.O.	TRAVEL CONTROL DETECT SW. (R. H.)	1	GG50S00007F1
PSW-8	N.C.	ENGINE OIL PRESSURE SW	2	-
PSW-9	N.O.	A/C PRESSURE SWITCH	9	-
PSW-10	N.O.	TRAVEL CONTROL DETECT SW. (L. H.)	1	GG50S00007F1

PRESSURE SENSOR

PT-NO.	U S E	SHEET NO.	KOBELCO PART NO.
PT-1	SWING PUMP PRESSURE	5	LS52S00015P1
PT-3	Fr. DRUM HOISTING PRESSURE SENSOR	7	LC52S00019P1
PT-4	Fr. DRUM LOWERING PRESSURE SENSOR	7	LC52S00019P1
PT-5	Re. DRUM HOISTING PRESSURE SENSOR	7	LC52S00019P1
PT-6	Re. DRUM LOWERING PRESSURE SENSOR	7	LC52S00019P1
PT-7	3rd. DRUM HOISTING PRESSURE SENSOR	7	LC52S00019P1
PT-8	3rd. DRUM LOWERING PRESSURE SENSOR	7	LC52S00019P1
PT-9	Fr. DRUM CLUTCH PRESSURE	5	GN52S00002P1
PT-10	Re. DRUM CLUTCH PRESSURE	5	GN52S00002P1
PT-11	3rd. DRUM CLUTCH PRESSURE	5	GN52S00002P1
PT-12	BOOM RAISEING PRESSURE SENSOR	7	LC52S00019P1
PT-13	BOOM LOWERING PRESSURE SENSOR	7	LC52S00019P1
PT-14	Re. DRUM CONTROL PROPORTIONAL PRESSURE SENSOR	7	LC52S00019P1
PT-15	3rd. DRUM CONTROL PROPORTIONAL PRESSURE SENSOR	7	LC52S00019P1
PT-16	CONTROL PRIMARY PRESSURE	5	GN52S00002P1
PT-17	Fr. DRUM INDEPENDENCE JUNCTION SELECT PRESSURE SENSOR	7	LC52S00015P1
PT-18	Re. DRUM INDEPENDENCE JUNCTION SELECT PRESSURE SENSOR	7	LC52S00015P1
PT-19	MAIN AUX. CHP START PRESSURE SENSOR	7	LC52S00019P1

PRESSURE SENSOR

PT-NO.	U S E	SHEET NO.	KOBELCO PART NO.
PT-20	Fr. DRUM CONTROL PROPORTIONAL PRESSURE SENSOR	7	LC52S00019P1
PT-21	Qmax CUT FB	5	LC52S00015P1
PT-22	SWING CONTROL (R. H.)	5	LC52S00019P1
PT-23	SWING CONTROL (L. H.)	5	LC52S00019P1
PT-24	POWER SHIFT PRESSUER	5	LC52S00019P1
PT-25	BOOM DRUM POWER SHIFT PRESSURE SENSOR	5	LC52S00019P1

PILOT LAMP

PL-NO.	U S E	SHEET NO.	KOBELCO PART NO.
PL-7	CHECK ENG. LAMP (RED)	2	JJ80S00006D2

Reference Only

(21/21)

Reference Only