SERVICE/MAINTENANCE MANUAL

This manual has been prepared for and is considered part of -

10000A-1

Model Number

XXXXXRef

Serial Number

This Manual is Divided into the following Sections:

	SAFETY SECTION
SECTION 1	REFERENCE MATERIALS
SECTION 2	TEST PROCEDURES
SECTION 3	GENERAL
SECTION 4	POWER TRAIN
SECTION 5	HYDRAULIC SYSTEM
SECTION 6	HOIST SYSTEM
SECTION 7	BOOM HOIST SYSTEM
SECTION 8	SWING SYSTEM
SECTION 9	TRAVEL SYSTEM
SECTION 10	ELECTRICAL SYSTEM
SECTION 11	AIR CONDITIONER
SECTION 12	TRANSLIFTER SYSTEM
SECTION 13	TROUBLESHOOTING

NOTICE

The serial number of the crane is the only method the Manitowoc Crane Care Lattice Team has of providing you with correct parts and service information.

Always furnish serial number of crane and its attachments when ordering parts or discussing service problems with your Manitowoc distributor or the Manitowoc Crane Care Lattice Team.

⚠ WARNING

To prevent death or serious injury:

- Avoid unsafe operation and maintenance.

  Crane and attachments must be operated and maintained by trained and experienced personnel. Manitowoc is not responsible for qualifying these personnel.
- Do not operate or work on crane or attachments without first reading and understanding instructions contained in Operator Information Manual and Service Manual supplied with crane and applicable attachments.
- Store Operator Information Manual and Service Manual in operator's cab.

  If Operator Information Manual or Service Manual is missing from cab, contact your Manitowoc distributor for a new one.

Reference Only

©2016 Manitowoc
Published 01-29-16, Control # 251-01

THE ORIGINAL LANGUAGE OF THIS PUBLICATION IS ENGLISH

Reference Only

	TABLE OF CONTENTS	
	SAFETY	
1.	REFERENCE MATERIALS	1
2.	MAINTENANCE STANDARDS TEST PROCEDURES	2
3.	GENERAL WORK STANDARD	3
4.	POWER TRAIN	4
5.	HYDRAULIC SYSTEM	5
6.	HOIST SYSTEM	6
7.	BOOM HOIST SYSTEM	7
8.	SWING SYSTEM	8
9.	TRAVEL SYSTEM	9
10.	ELECTRIC SYSTEM	10
11.	AIR CONDITIONER	11
12.	TRANSLIFTER SYSTEM	12
13.	TROUBLESHOOTING	13

Reference Only

Reference Only

SAFETY

1. REFERENCE MATERIALS

1.1 11000-1 SPECIFICATION 1-1
1.1.1 CRANE OUTSIDE DIMENSION 1-1
1.1.2 CRANE SPECIFICATION, PERFORMANCE 1-2
1.1.3 CRANE WORKING RANGES 1-4
1.2 11000-1 DIMENSION, WEIGHT OF EACH COMPONENT 1-7
1.2.1 BASE MACHINE 1-7
1.2.2 COUNTERWEIGHT WITH SELF REMOVAL DEVICE 1-9
1.2.3 ATTACHMENT 1-10
1.3 11000-1 CLAMSHELL RATED LOADS (OPTION) 1-12
1.4 11000-1 SWING AND TRAVEL STABILITY 1-16
1.5 11000-1 TRAVEL ALLOWABLE SLOPE ANGLE 1-19
1.5.1 CRANE ATTACHMENT INSTALLED : BOOM INSERT CONFIGURATION 1-19
1.6 ENGINE MAIN SPECIFICATION 1-25

2. MAINTENANCE STANDARDS TEST PROCEDURES

2.1 MAINTENANCE STANDARD 2-1
2.1.1 PIN, BUSHING, SPRING, LINING AND SHEAVE 2-1
2.1.2 TRAVEL DEVICE 2-8
2.2 PERFORMANCE STANDARD AND TEST PROCEDURE 2-15
2.2.1 OPERATING SPEED 2-17
2.2.2 HYDRAULIC PRESSURE 2-18
2.2.3 SWING BEARING 2-22

Reference Only

3. GENERAL WORK STANDARD

3.1 STANDARD TIGHTENING TORQUE 3-1
3.1.1 TIGHTENING TORQUE OF CAP SCREWS AND NUTS 3-1
3.1.2 TIGHTENING TORQUE OF HYDRAULIC FITTINGS 3-5
3.2 STANDARD PARTS 3-7
3.2.1 BOLT 3-7
3.2.2 O-RING 3-8
3.2.3 BACK-UP RING 3-9
3.2.4 BITE TYPE FITTING 3-10
3.3 CONVERSION TABLE 3-12
3.3.1 UNIT CONVERSION 3-12
3.3.2 MILLIMETER : INCH CONVERSION TABLE 3-13
3.3.3 METER AND FOOT CONVERSION TABLE 3-15
3.3.4 GRADE CONVERSION TABLE 3-16
3.3.5 UNIT WEIGHT TABLE 3-17
3.3.6 SYSTEM INTERNATIONAL (SI) UNIT CONVERSION TABLE 3-18

4. POWER TRAIN

4.1 APPARATUS AND COMPONENTS LOCATION 4-3
4.2 ENGINE 4-6
4.2.1 REMOVAL OF THE ENGINE 4-6
4.2.2 REPAIR AND MAINTENANCE OF THE ENGINE 4-9
4.2.3 INSTALLATION OF THE ENGINE 4-10
4.3 PUMP DRIVE ASSEMBLY 4-14
4.3.1 CONSTRUCTION OF THE POWER DIVIDER 4-15
4.3.2 CONSTRUCTION OF THE COUPLING 4-20
4.3.3 REMOVAL OF EACH PUMP 4-21
4.3.4 REMOVAL OF THE POWER DIVIDER 4-22
4.3.5 REMOVAL OF THE COUPLING 4-23
4.3.6 DISASSEMBLING THE POWER DIVIDER 4-24
4.3.7 CHECK AND REPAIR OF THE POWER DIVIDER 4-26
4.3.8 ASSEMBLING THE POWER DIVIDER 4-27
4.3.9 INSTALLATION OF THE COUPLING 4-28
4.3.10 INSTALLATION OF EACH PUMP 4-29
4.4 ASSEMBLY AND DISASSEMBLY OF RADIATOR 4-30
4.4.1 CONSTRUCTION OF THE RADIATOR 4-30
4.4.2 REPLACEMENT ORDER OF RADIATOR CORE 4-31
4.5 DEF/AdBlue® SCR SYSTEM 4-32
4.5.1 DEF/AdBlue® TANK 4-37
4.5.2 INDUCEMENT CONTROL SYSTEM 4-40

Reference Only

5. HYDRAULIC SYSTEM

5.1 LOCATION OF MAIN HYDRAULIC COMPONENTS 5-2
5.1.1 COMPONENTS LOCATION ON THE HYDRAULIC SCHEMATIC 5-2
5.1.2 HYDRAULIC COMPONENTS LIST 5-7
5.1.3 LAYOUT OF HYDRAULIC COMPONENTS 5-11
5.2 CONSTRUCTION AND FUNCTION 5-18
5.2.1 OIL FLOW FROM No.1 AND No.2 PUMPS 5-18
5.2.2 OIL FLOW FROM No.3 PUMP 5-20
5.2.3 OIL FLOW FROM No.4 AND No.5 PUMPS (FRONT, REAR DRUM BRAKE COOLING) 5-22
5.2.4 OIL FLOW FROM No.6 PUMP 5-24
5.2.5 OIL FLOW FROM No.7 PUMP 5-28
5.3 VALVE 5-36

6. HOIST SYSTEM

6.1 APPARATUS AND LOCATION OF COMPONENTS 6-2
6.2 CONSTRUCTION AND FUNCTION 6-6
6.2.1 HYDRAULIC SCHEMATIC 6-6
6.2.2 LIFTING A LOAD 6-8
6.2.3 HOLDING A HOISTED LOAD 6-10
6.2.4 LOWERING A LOAD (POWER LOWERING) 6-12
6.2.5 FREE FALL OPERATION 6-14
6.2.6 G WINCH MODE LIFTING 6-22
6.2.7 G WINCH MODE LOWERING 6-23
6.3 WINCH 6-24
6.3.1 WINCH INSTALLATION 6-24
6.3.2 WINCH ASSEMBLY 6-25
6.3.3 REDUCTION UNIT ASSEMBLY 6-26
6.3.4 ADJUSTMENT OF DRUM LOCK 6-28
6.4 BRAKE PEDAL 6-30
6.4.1 ASSEMBLY DRAWING 6-30
6.4.2 ADJUSTING THE BRAKE PEDAL 6-32
6.4.3 BLEEDING AIR FROM BRAKE CIRCUIT 6-33

7. BOOM HOIST SYSTEM

7.1 APPARATUS AND COMPONENTS LOCATION 7-2
7.2 CONSTRUCTION AND FUNCTION 7-4
7.2.1 HYDRAULIC SCHEMATIC 7-4
7.2.2 RAISING BOOM 7-5
7.2.3 NEUTRAL (HOLDING BOOM) 7-6

Reference Only

7.2.4 LOWERING BOOM 7-7
7.3 BOOM HOIST WINCH 7-9
7.3.1 BOOM HOIST WINCH INSTALLATION 7-9
7.3.2 REDUCTION UNIT ASSEMBLY 7-10
7.3.3 BOOM DRUM LOCK ASSEMBLY 7-12
7.3.4 ADJUSTMENT OF BOOM DRUM LOCK 7-13

8. SWING SYSTEM

8.1 APPARATUS AND COMPONENTS LOCATION 8-1
8.2 CONSTRUCTION AND FUNCTION 8-3
8.2.1 HYDRAULIC SCHEMATIC 8-3
8.2.2 SWING (NEUTRAL FREE) 8-5
8.2.3 STOPPING (NEUTRAL FREE) 8-6
8.2.4 SWING (NEUTRAL FREE/BRAKE MODE SELECT) 8-7
8.2.5 STOPPING (NEUTRAL FREE/BRAKE MODE SELECT) 8-9
8.3 CONSTRUCTION OF THE SWING SYSTEM 8-11
8.3.1 SWING REDUCTION UNIT 8-11
8.3.2 REDUCTION UNIT ASSEMBLY 8-12
8.3.3 SWING BEARING 8-13
8.3.4 SWING LOCK 8-14

9. TRAVEL SYSTEM

9.1 APPARATUS AND COMPONENTS LOCATION 9-1
9.2 CONSTRUCTION AND FUNCTION 9-2
9.2.1 HYDRAULIC SCHEMATIC 9-2
9.2.2 TRAVELING (RIGHT SIDE FORWARD) 9-3
9.2.3 STOPPING 9-4
9.3 CRAWLER 9-5
9.3.1 DRIVE ASSEMBLY 9-5
9.3.2 MOTOR AND REDUCTION UNIT 9-6
9.3.3 ADJUSTMENT OF SHOE 9-9

10. ELECTRIC SYSTEM

10.1 ELECTRICAL 10-3
10.1.1 ELECTRICAL WIRING SCHEMATIC 10-3
10.1.2 CONNECTOR LAYOUT 10-24
10.1.3 LOCATION AND USE OF FUSE 10-162
10.1.4 WIPER CONTROL RELAY 10-167
10.1.5 PRESSURE SWITCH (FOR TRAVEL MOTION DETECT) 10-168
10.1.6 PRESSURE SWITCH (FOOT BRAKE) 10-169

Reference Only

10.1.7 PRESSURE SENSOR 10-170
10.1.8 INCLINATION SENSOR 10-173
10.1.9 BUZZER UNIT 10-174
10.1.10 RELAY BOX 10-175
10.1.11 RELAY BOX 10-186
10.1.12 LOAD DETECTOR (CRANE) 10-189
10.1.13 ANGLE SENSOR 10-190
10.1.14 HOW TO CHECK THE FAILURE CONTENTS 10-192
10.1.15 WARNING DISPLAY CONDITION 10-196
10.1.16 ENGINE ECU 10-207
10.2 LOAD SAFETY DEVICE 10-210
10.2.1 CONFIGURATION OF SCREENS 10-211
10.2.2 SYSTEM DAIGRAM 10-212
10.2.3 MONITOR DISPLAY 10-213
10.2.4 DETAIL OF ML CONTROLLER 10-220
10.2.5 SHIFTING TO MAINTENANCE SCREEN 10-233
10.2.6 INPUT / OUTPUT SIGNAL 10-235
10.2.7 ML FUNCTION SETTING 10-244
10.2.8 DATA COPY, FORMAT 10-246
10.2.9 LANGUAGE, UNIT SETTING 10-250
10.2.10 ML ADJUSTMENT (NORMAL) 10-251
10.2.11 ML ADJUSTMENT (TEMPORARY) 10-274
10.2.12 OPERATION PROGRESS 10-275
10.2.13 VERSION INFORMATION 10-278
10.2.14 FAILURE HISTORY 10-279
10.2.15 ADJUSTMENT DATA 10-282
10.2.16 DOWNLOAD ML PROGRAM 10-288
10.2.17 DOWNLOAD OF MONITOR PROGRAM 10-290
10.3 MAIN CONTROLLER 10-295
10.3.1 ARRANGEMENT OF MAIN CONTROLLER 10-295
10.3.2 COMPOSITION OF SYSTEM 10-296
10.3.3 FUNCTION OF MAIN CONTROLLER 10-297
10.3.4 MAIN CONTROLLER 1, 2 (HARDWARE) 10-333
10.3.5 SPECIFICATIONS OF MAIN CONTROLLER INPUT/OUTPUT 10-334
10.3.6 ARRANGEMENT OF MAIN CONTROLLER CONNECTOR PIN 10-348
10.3.7 ADJUSTMENT OF MAIN CONTROLLER 10-364
10.3.8 CONTROLLER MALFUNCTION EMERGENCY MEASURES 10-369

Reference Only

11. AIR CONDITIONER

11.1 NAME OF THE AIR CONDITIONER PARTS 11-1
11.2 ELECTRIC WIRING DIAGRAM 11-7
11.3 PARTS ILLUSTRATION 11-8
11.4 DISASSEMBLY AND ASSEMBLY OF THE UNIT 11-10
11.4.1 REMOVAL OF THE BLOWER UNIT 11-10
11.4.2 REPLACING THE BLOWER MOTOR 11-11
11.4.3 REPLACING THE BLOWER CONTROLLER 11-11
11.4.4 REMOVAL OF THE HEATER CORE 11-11
11.4.5 REMOVAL OF THE AIR CON. UNIT CASE-FRONT, REAR AND LOWER 11-12
11.4.6 REPLACING THE EVAPORATOR AND EXPANSION VALVE 11-13
11.4.7 INSTALLATION OF EVAPORATOR SENSOR 11-13
11.4.8 REPLACING THE MOTOR ACTUATOR 11-14
11.5 FAULT DETECTION FROM THE CONTROL PANEL INDICATION 11-15
11.5.1 GENERAL 11-15
11.5.2 FAULT IN THE INPUT AND OUTPUT CIRCUIT OF THE MOTOR ACTUATOR 11-15
11.5.3 FAULT IN THE THERMISTOR SENSOR CIRCUIT 11-16
11.6 BASIC SYSTEM OF HVAC 11-17
11.7 RECHARGING OF THE COOLANT 11-23
11.7.1 CAUTION AT WORK 11-23
11.7.2 WORK PROCEDURE 11-25
11.7.3 RECHARGING PROCEDURE 11-27
11.8 TROUBLESHOOTING 11-32

12. TRANSLIFTER SYSTEM

12.1 APPARATUS AND COMPONENTS LOCATION 12-1
12.2 CONSTRUCTION AND FUNCTION 12-2
12.2.1 HYDRAULIC SCHEMATIC 12-2
12.2.2 RAISING THE TRANSLIFTER 12-3
12.2.3 LOWERING THE TRANSLIFTER 12-4
12.3 REMOTE CONTROL SWITCH BOX 12-5

13. TROUBLESHOOTING

13.1 ENGINE 13-1
13.2 WINCH SYSTEM 13-3
13.3 SWING SYSTEM 13-8
13.4 TRAVELING SYSTEM 13-11

Reference Only

SAFETY

SAFETY INFORMATION

Most accidents, which occur during operation, are due to neglect of precautionary measures and safety rules.
Sufficient care should be taken to avoid these accidents.
Erroneous operation, lubrication or maintenance services are very dangerous and may cause injury or death of personnel.
Thus, precautionary measures, or notes, written in this manual should be read and understood by personnel before starting each task.
Operation, inspection, and maintenance should be carefully carried out, and safety must be given the first priority.
Messages of safety are indicated with caution marks.
The safety information contained in this manual is intended only general safety information.
Messages of safety appear in this manual and on the machine.
All messages of safety are identified by the words “DANGER”, “WARNING” and “CAUTION”.
These words mean the following :

⚠ DANGER	Indicates an imminently hazardous situation which, if not avoided, will result in a loss of life or serious injuries.
⚠ WARNING	Indicates a potentially hazardous situation which, if not avoided, could result in a loss of life or serious injuries.
⚠ CAUTION	Indicates a potentially hazardous situation which, if not avoided, may result in a minor or moderate injuries. It may also be used to alert against possible damage to the machine and its components.
Note	Supplementary explanation.

It is very difficult for us to forecast every danger that may occur during operation.
However, safety can be ensured by operating this machine according to methods recommended by Manitowoc.
While operating machine, be sure to perform work with great care, so as to not damage the machine, or let accidents occur.
Please continue studying this manual until proper operation is completely understood.

Reference Only

EXPLANATION OF WARNING LABELS IN THE MACHINE

Since the warning labels are installed in the machine and indicated with the three stages in the same way as the warning description, confirm the positions and contents of all warning labels first.
Put them to the practical use to secure safety when operating, checking and performing maintenance.

HANDLING OF WARNING LABELS IN THE MACHINE

1. When the warning label is damaged or stained, order it to the designated service shop.
2. Do not remove the warning labels.
3. When the surface of the warning label is soiled and difficult to be seen, wipe it cleanly.

Reference Only

LABEL LAYOUT

* Numbers in the drawings correspond with those in the label explanation detail after “P.11”

2

⚠ CAUTION

SET FREE FALL INCREASED SELECTOR SWITCH TO "LOCK" POSITION WHEN REEVING WIRE ROPE.

DRUM AUTOMATICALLY ROTATES WITHOUT LOAD WHEN BRAKE IS RELEASED WITH FREE FALL INCREASED SELECTOR SWITCH SET TO "RELEASE" POSITION.

GG20T01893P1

1

⚠ WARNING

- To prevent death or serious injury.
- Avoid unsafe operation or maintenance.
- Do not operate or work on this crane without first reading and understanding operator's manual and capacity charts.
- Keep manual in operator's cab.
- Attach Capacity charts to chain and store on hook provided in operator's cab.
- If operator's manual or capacity charts are lost, contact your nearest dealer for new ones.

FP20T01121P1

4

⚠ DANGER

TIPPING HAZARD!

When Operating With Retracted Crawlers

- DURING SETUP – do not swing over retracted crawlers with boom removed (or just boom butt installed) and counterweights installed.
- DURING OPERATION – comply with swing limitations given in Capacity chart.

GG20T01890P1

5

⚠ CAUTION

WHEN LOCKING THE BRAKE PEDAL, STEP ON THE PEDAL FULLY TO LOCK THE PAWL AT THE BOTTOM NOTCH.

2432T5113

INSIDE VIEW (L/H)

11

⚠ CAUTION

DO NOT LIFT PEOPLE WITH THIS CRANE. FAILURE TO DO SO MAY CAUSE SERIOUS INJURY.

2432T4668

8

⚠ CAUTION

STRUCTUAL FAILURE

Gantry must be in high position

Read operators manual for boom connecting length

BOOM TIP ONLY

40FT OR LESS

GG20T01545P1

10

⚠ CAUTION

THIS MACHINE CONTAINS ALLOY AND HEAT TREATED STEELS. DO NOT WELD OR APPLY HEAT WITHOUT CHECKING WITH YOUR AUTHORIZED DEALER. UNAUTHORIZED MODIFICATIONS MAY WEAKEN THE MACHINE.

2432T4671

3

⚠ DANGER

TIPPING HAZARD!

DO NOT LIFT WITH CRAWLERS RETRACTED

EXTEND CRAWLERS TO PROPER POSITION BEFORE LIFTING.
COMPLY WITH LIMITATIONS GIVEN IN CAPACITY CHARTS.

GG20T01891P1

9

⚠ DANGER

FALLING LOAD HAZARD!

OPERATING CRANE IN「FREE FALL MODE」MAY CAUSE LOAD TO FALL DUE TO OPERATIONAL ERROR.
OPERATE CRANE IN「NEUTRAL BRAKE MODE」.

GG20T01892P1

INSIDE VIEW (R/H)

Reference Only

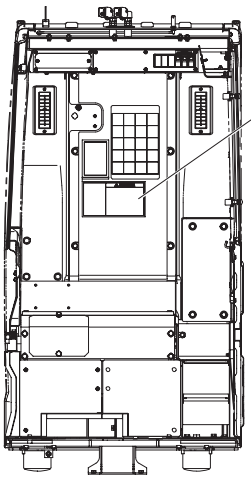

CAB INSIDE VIEW (REAR)

6

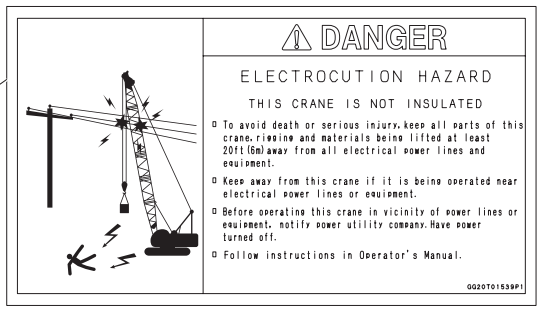

13

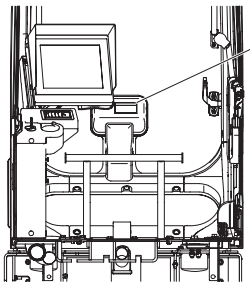

CAB INSIDE VIEW (FRONT)

32 (10000E-1)

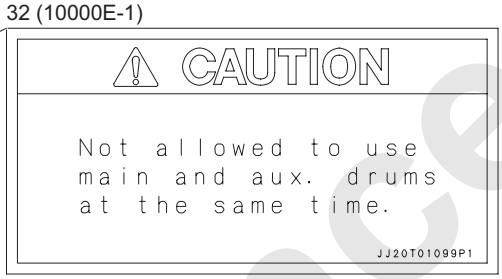

Machine front

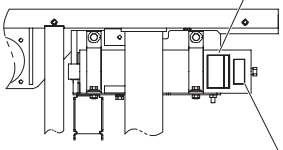

ACCUMULATOR

14

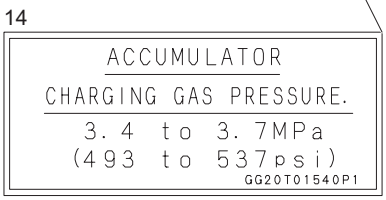

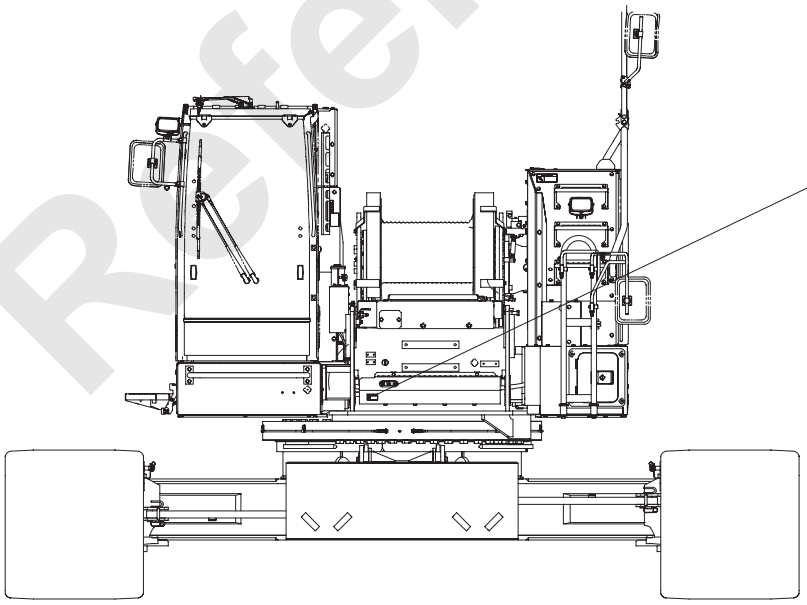

30

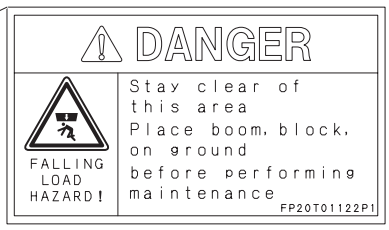

Reference Only

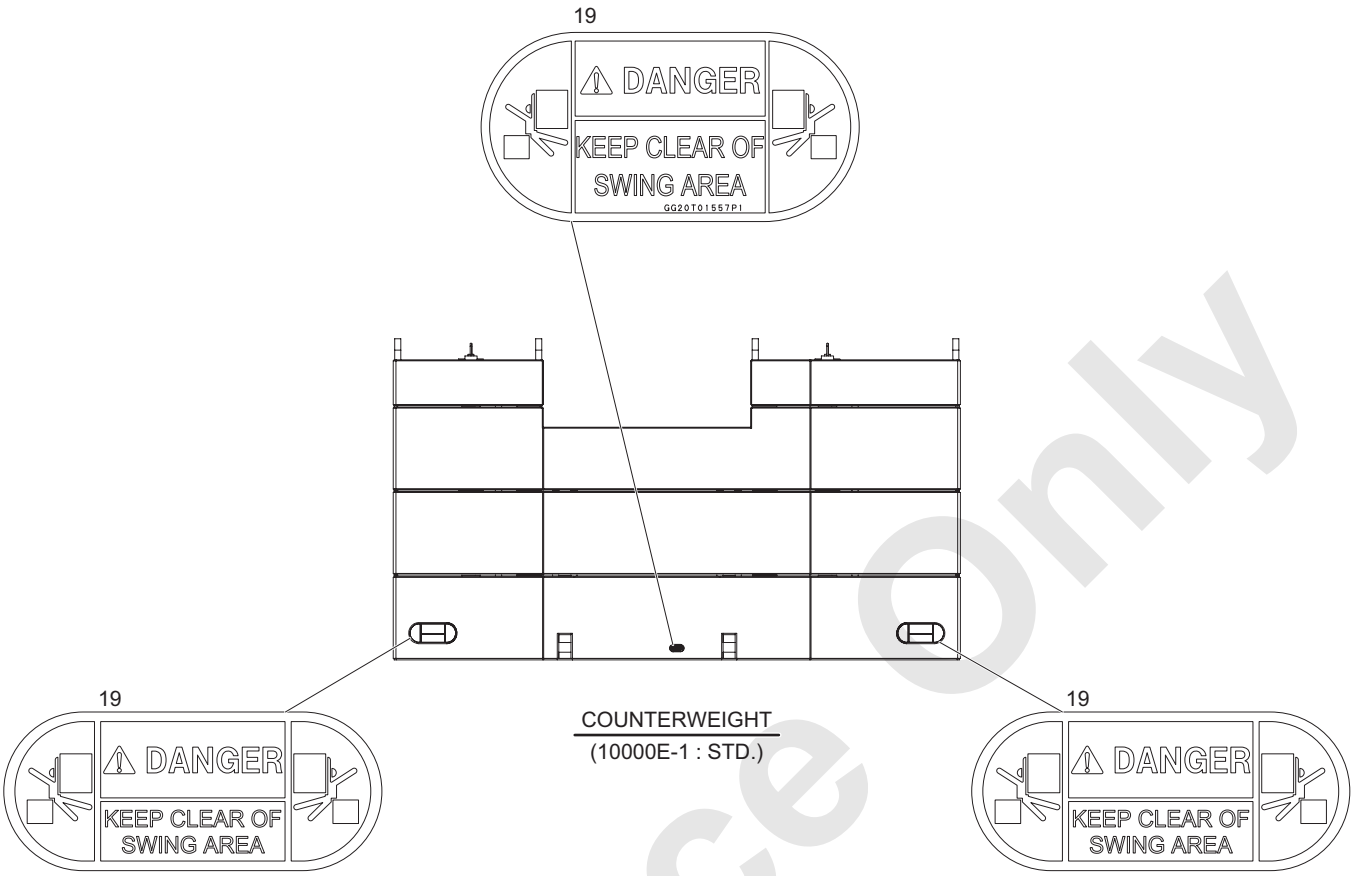

COUNTERWEIGHT
(10000E-1 : STD.)

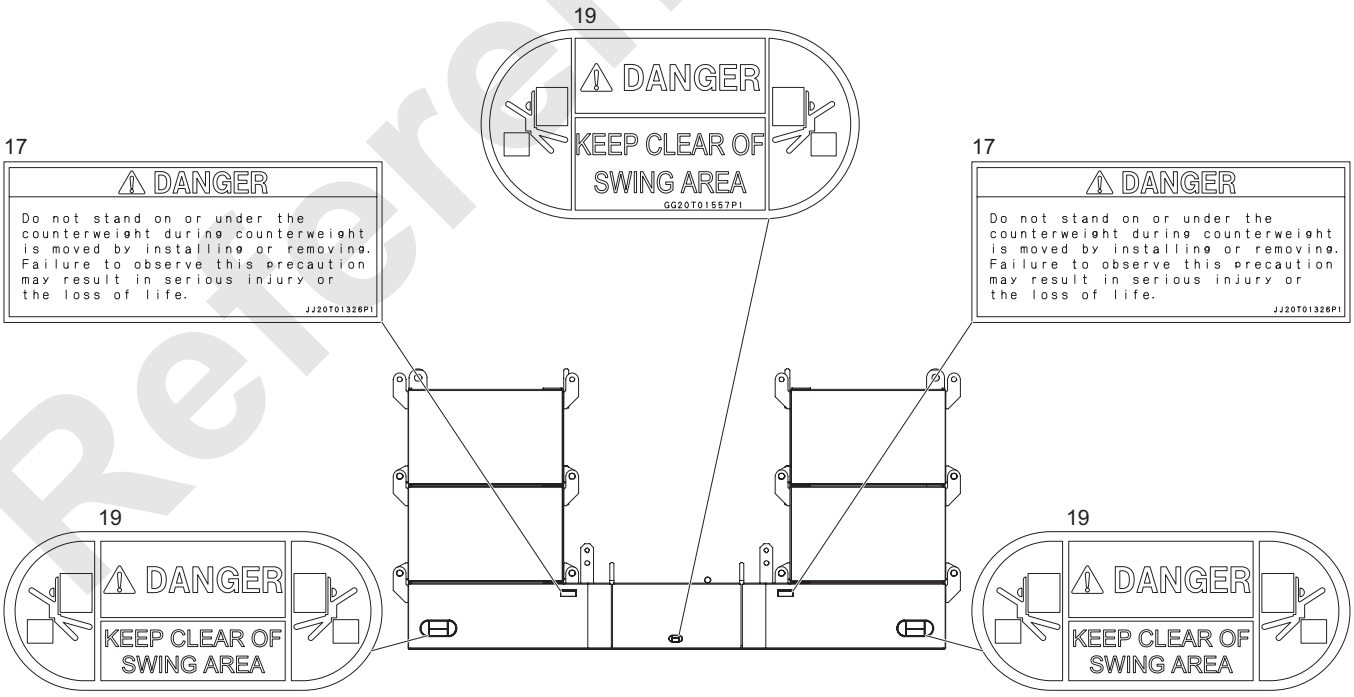

COUNTERWEIGHT WITH SELF REMOVAL DEVICE
(11000-1 : STD. / 10000E-1 : OPT.)

Reference Only

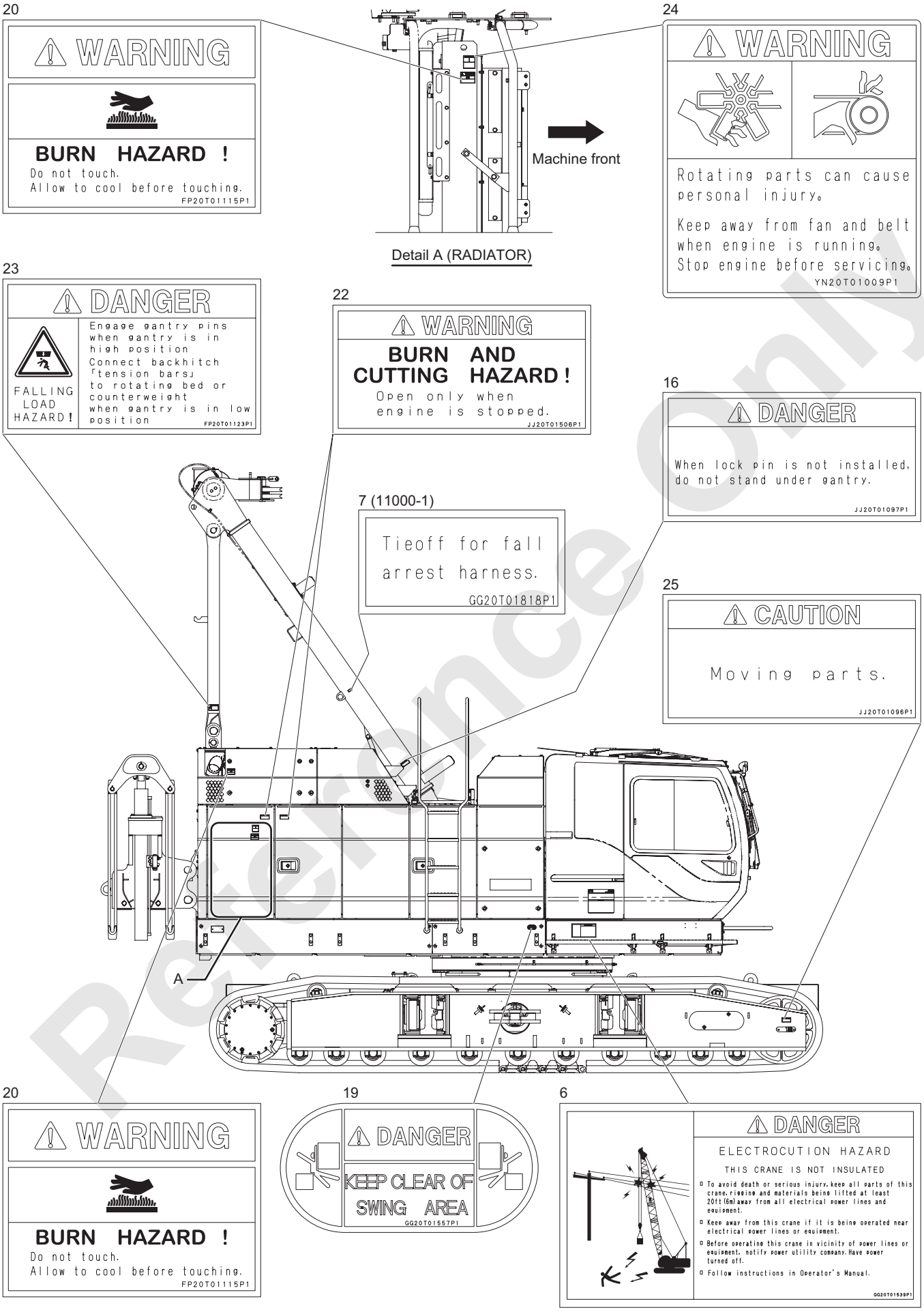

Reference Only

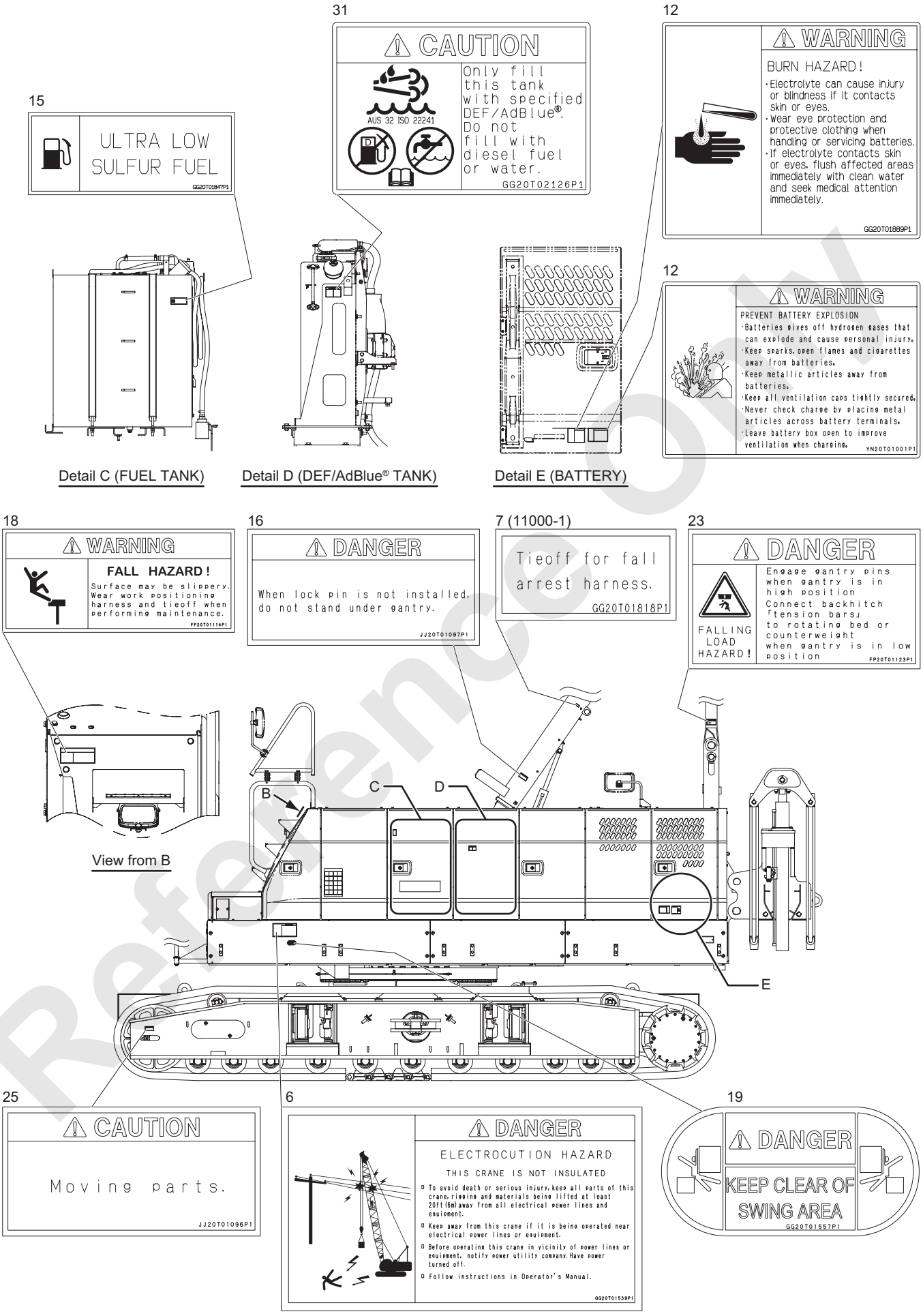

Reference Only

22

⚠ WARNING

PINCH HAZARD !

Open only when engine is stopped.

JJ20T01507P1

25

⚠ CAUTION

Moving parts.

JJ20T01096P1

22

⚠ WARNING

PINCH HAZARD !

Open only when engine is stopped.

JJ20T01507P1

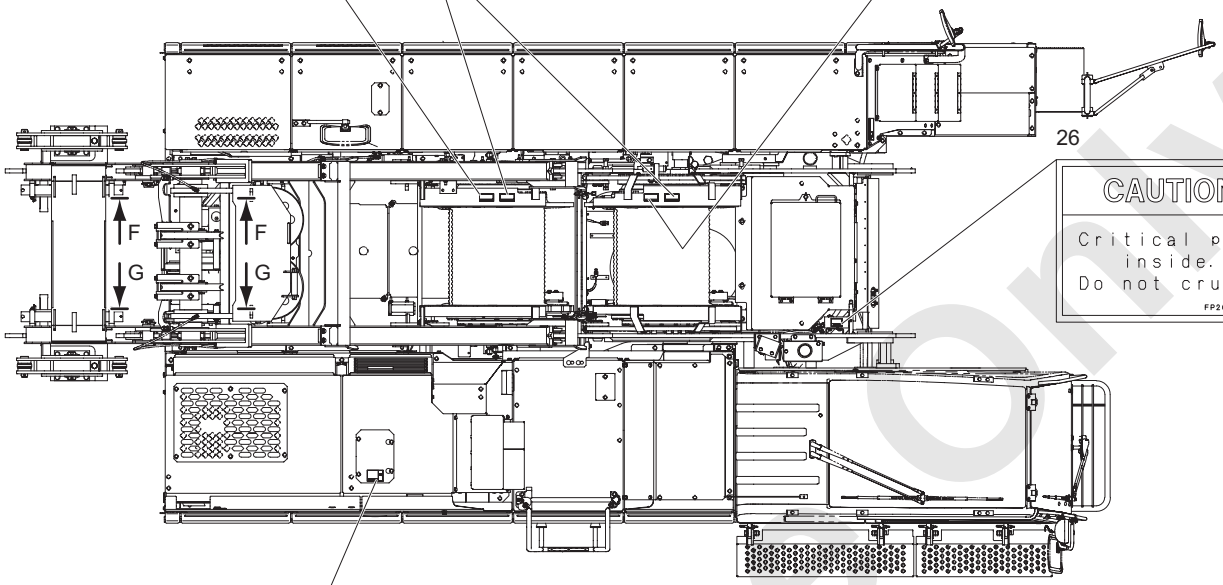

26

CAUTION

Critical part inside.
Do not crush.

FP20T01116P1

21

COOLANT FILL

⚠ WARNING

Burn Hazard!

Do not remove coolant fill cap while coolant is hot. After coolant cools:
1. Place a heavy cloth or other protective covering over fill cap.
2. DO NOT DEPRESS fill cap.
3. Turn cap counterclockwise until it stops.
4. Wait for pressure (indicated by hissing sound) to escape completely.
5. When hissing stops, depress cap, turn counterclockwise, and remove.

GG20T01555P1

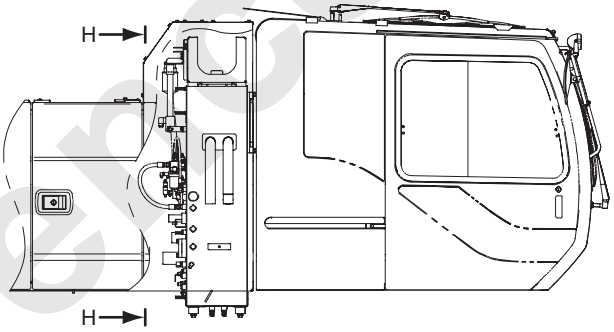

7

Tieoff for fall arrest harness.

GG20T01818P1

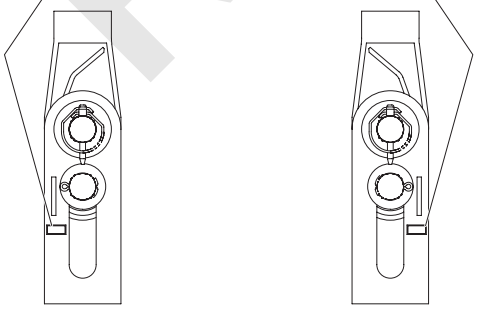

Section F-F (L/H)

Section G-G (R/H)

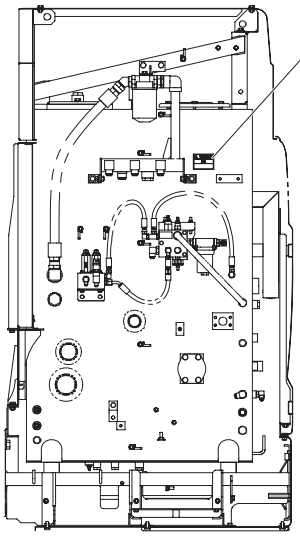

Section H-H

20

⚠ WARNING

BURN HAZARD !

Do not touch.
Allow to cool before touching.

FP20T01115P1

Reference Only

29 (11000-1)

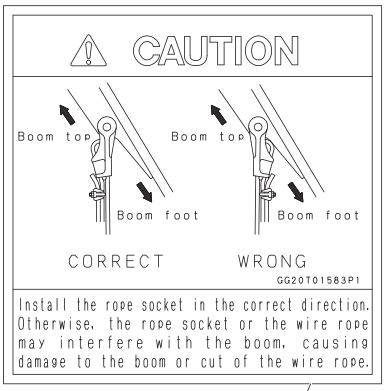

29 (10000E-1)

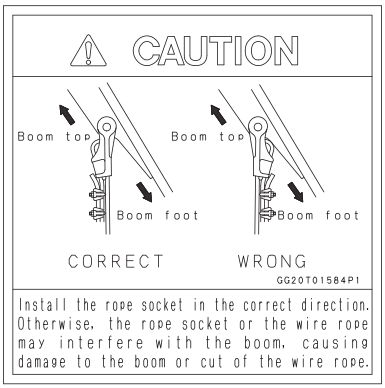

27

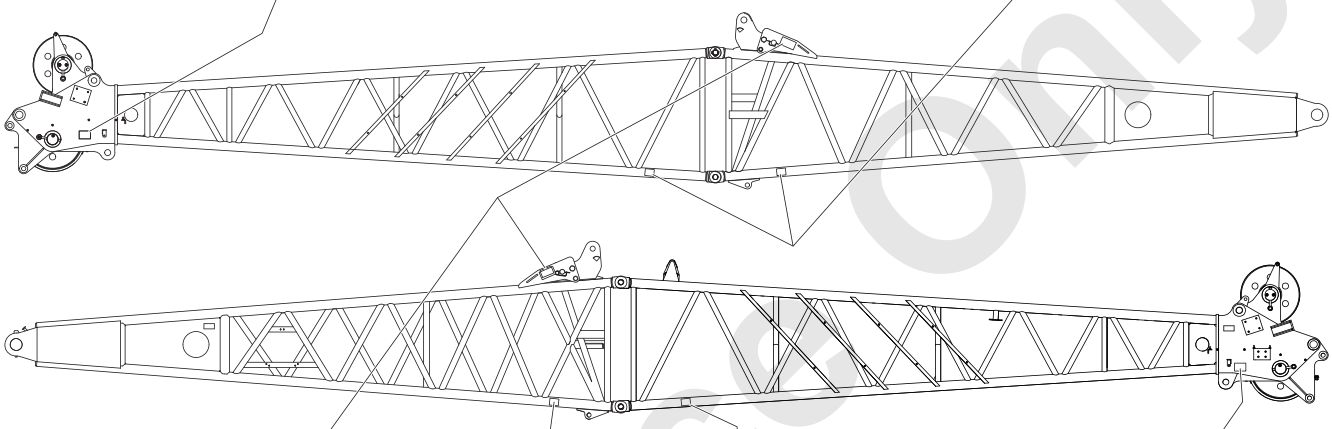

BOOM

28

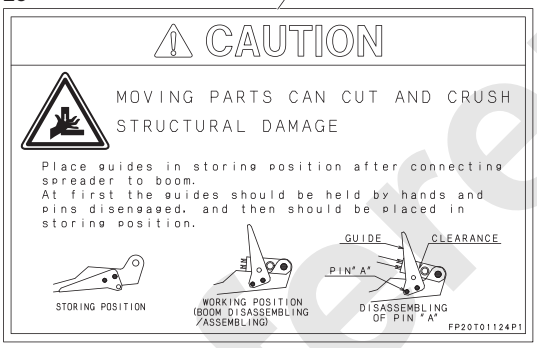

27

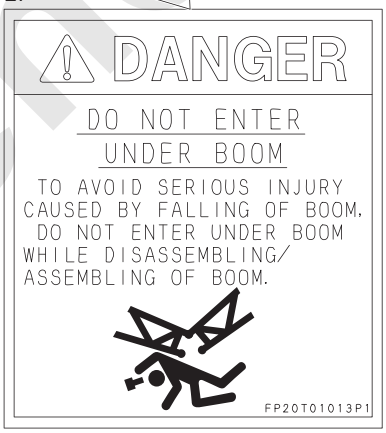

29 (11000-1)

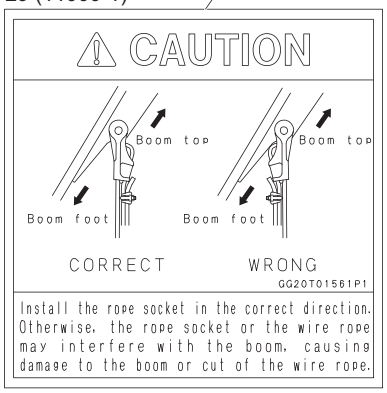

29 (10000E-1)

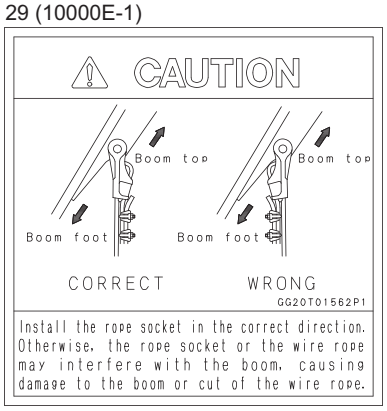

Reference Only

27

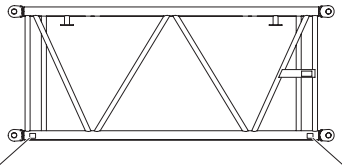

BOOM INSERT

27

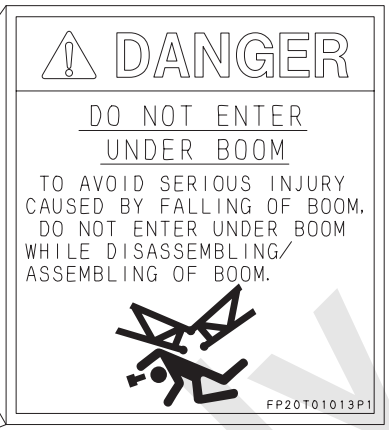

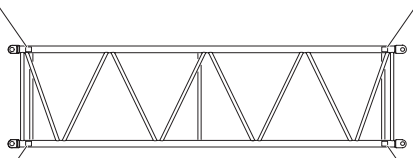

JIB INSERT

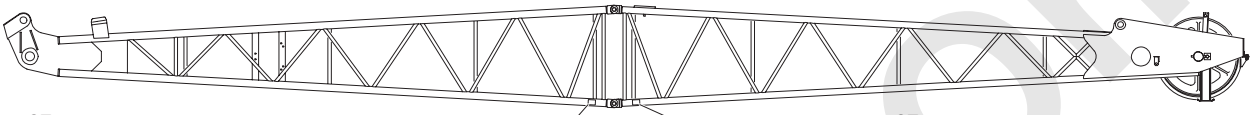

JIB

27

27

Reference Only

1. Ensure to read the operators manual before operation / handling / assembly / disassembly / transportation / inspection / maintenance of the machine.

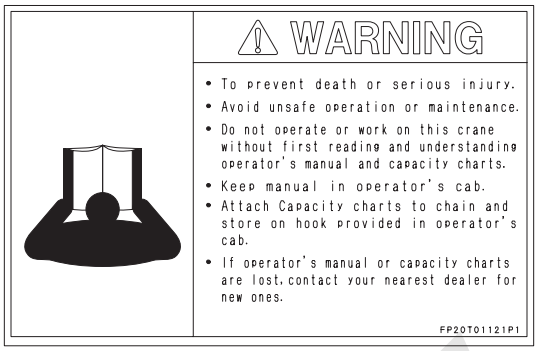

2. If the free fall speed select switch is in speed increase side and the brake is released and the drum may rotate automatically to lowering side even without lifting load and wire rope may be paid out to lower the hook and rough spooling may be caused occur.
   When paying out the wire rope from the drum, ensure to set the free fall select switch to normal side.

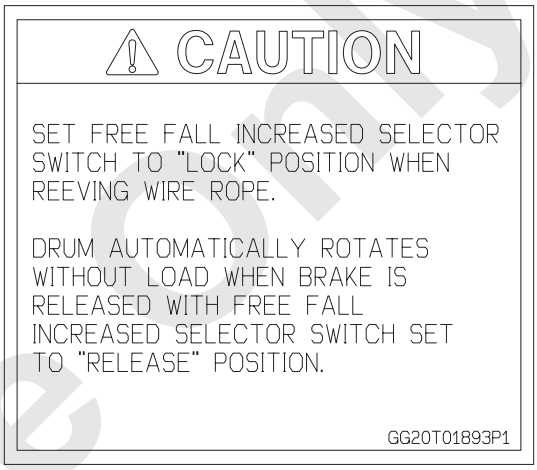

3. The crane may turn over during work based on machine condition.
   Install the proper amount of the counterweight and secure them to make proper machine configuration.

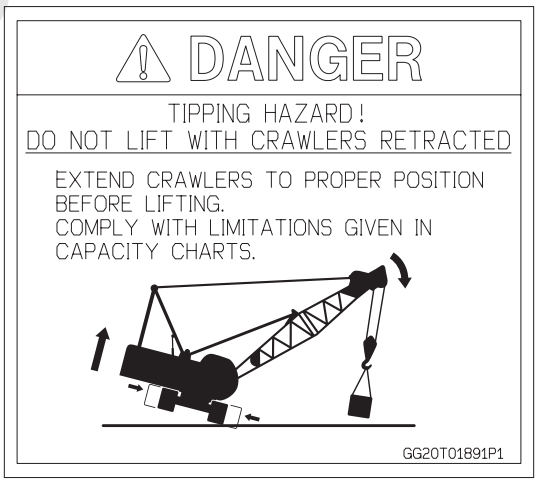

Reference only

4. If machine swings or is assembled / disassembled with crawler retracted, main machinery may turn over to rear side.
   Read the operator's manual carefully and set the crane to the proper configuration.

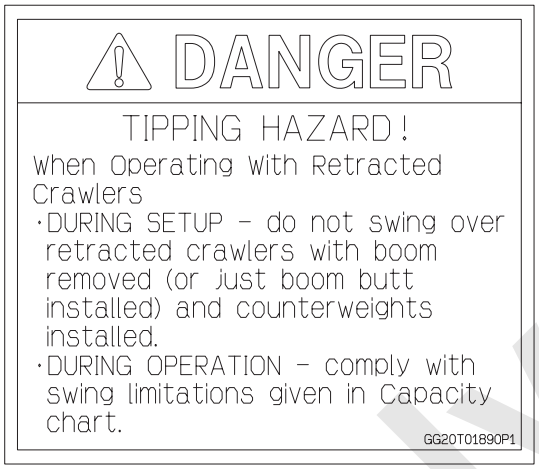

5. If the brake pedal lock is not completely engaged, lifting load or hook may be lowered unexpectedly and is very dangerous.
   When locking the brake pedal, press the brake pedal fully and confirm that the pedal is locked completely.

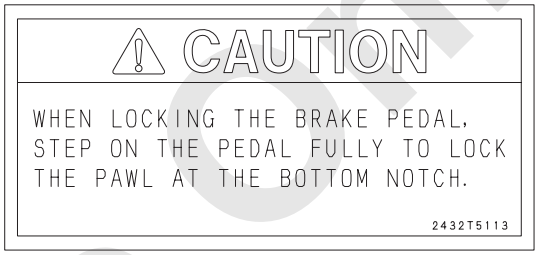

6. During crane work if the boom comes to close to the tower or power lines, electric shock may hit the crane.
   Keep the boom away from the tower or power lines for safety.

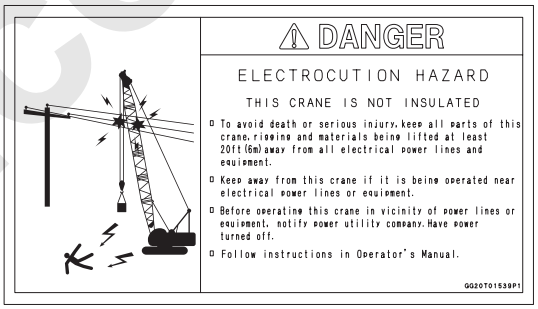

7. When work is done on the upper surface of the guard or counterweight, person may fall off by mistake.
   Ensure to engage the safety hook on the specified place.

Reference Only

8. When the boom is assembled, disassembled, boom self erection / self lowering or crane work with the low gantry, the gantry or boom may be damaged and may fall off.
   Raise the gantry to the proper position for work.

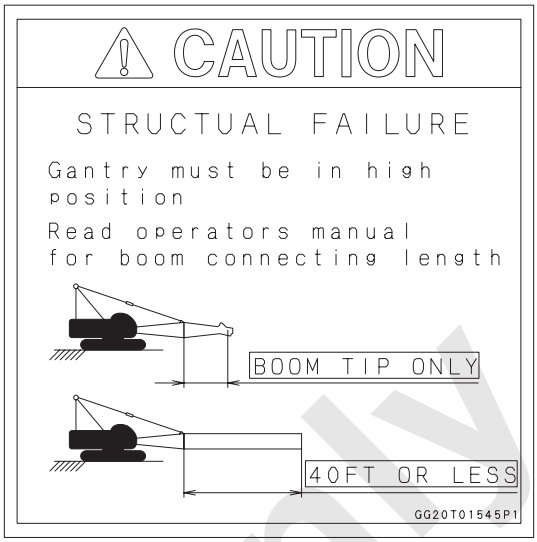

9. Free fall work of load may cause dropping the load by mishandling.
   Use power lowering of load in the crane work.
   (Even on neutral free side, power lowering is possible by turning the lever to lowering side.)

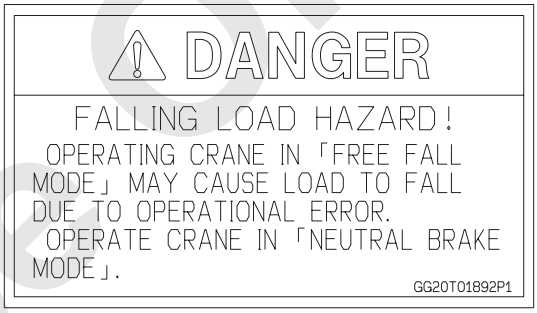

10. This machine contains alloy and heat treated steels.
    Do not weld or apply heat without checking with your authorized dealer.
    Unauthorized modifications may weaken the machine.

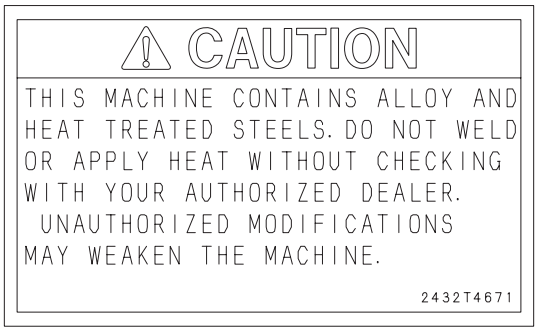

11. Do not lift people with this crane.
    Failure to do so may cause serious injury.

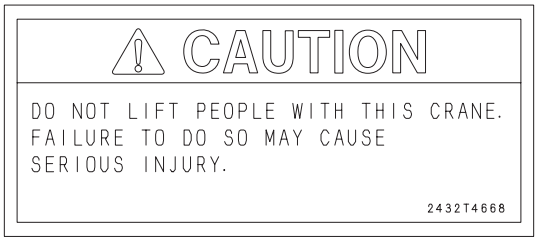

Reference Only

12. Wrong handling of battery may cause burns, blindness or explosion by inflammation.

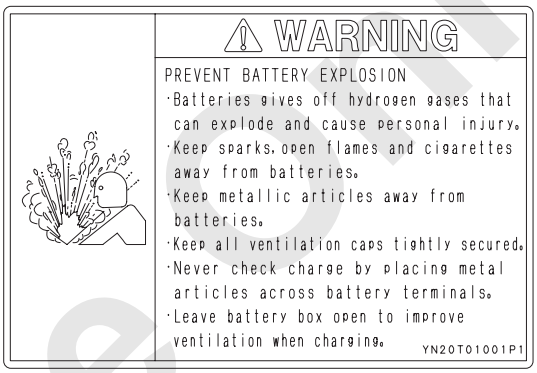

13. If accumulator is handled in wrong way, burns, loss of eyesight, explosion may be caused.
Take extra care in handling accumulator.
(Do not weld, flame cut, dispose or disassemble.)

14. The accumulator is charged with high pressure nitrogen gas.
Charge the nitrogen gas within the specified pressure.

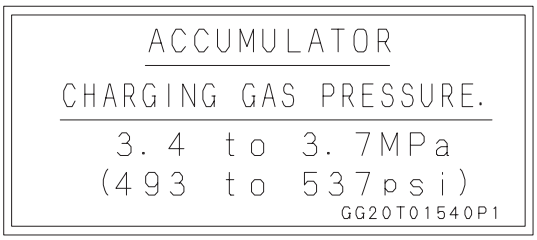

15. Using the fuel other than the specified diesel fuel may cause engine failure, fire or explosion.
Ensure to use the diesel fuel in the fuel tank.
Use ultra low sulfur diesel fuel only.
(S50 : sulfur content lower than 50 ppm)

Reference Only

16. After raising the gantry, ensure to insert the gantry fixing pin.
    Otherwise the gantry may come off and the boom may drop off.

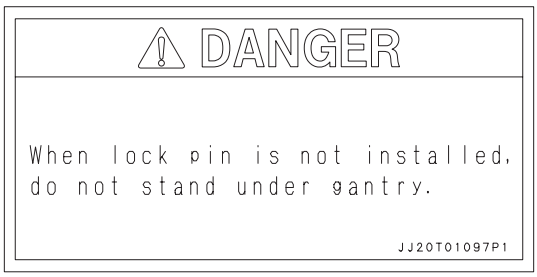

17. Handling the counterweight in wrong way is very dangerous.
    Never allow any person to enter under the lifting counterweight.

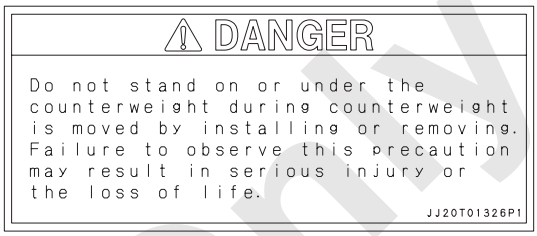

18. When working on the upper surface of the guard, person may fall off the upper surface of the guard.
    During high place work on the upper surface of the guard, do not come close to the guard side face to prevent falling off.
    During work on the upper surface of the guard, ensure to wear safety belt and hook the safety belt on the upper machinery and firmly stand on the guard.

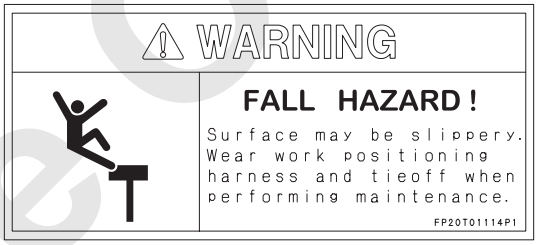

19. While the upper machinery is swinging, person may be crushed with the upper machinery.
    Never allow anybody to enter the swing range.

Reference Only

20. During engine running or straight after the engine is stopped, hydraulic oil tank, engine and muffler are hot.
    Touching them may cause burns.
    Do not touch the hot area.

21. During engine running or right after the engine is stopped, inside of the radiator becomes high pressure and hot.
    Person may get burns by hot water blow out when taking off the radiator cap.
    Take extra care of opening or closing of the radiator cap.

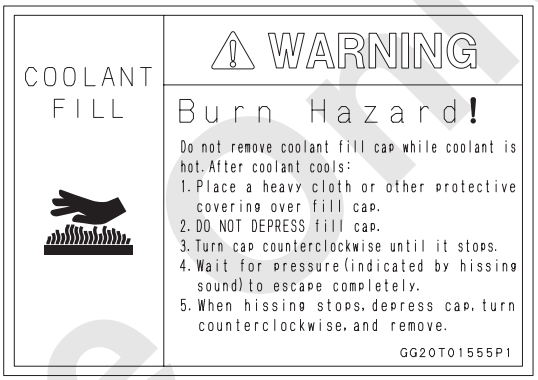

22. When inspection or work is done by removing the drum flange cover, serious injuries may be caused if the drum rotates unexpectedly.
    Stop the crane and then remove the drum cover.

23. When the machine is transported with the low gantry, connect the tension bar to the revolving frame or counterweight.

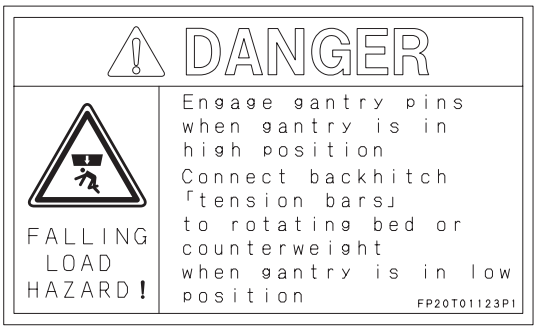

Reference only

24. When working on the engine area for inspection and maintenance, person may be entangled with the fan belt and may get injured if the engine is running.
    Stop the engine when inspection or maintenance work is done.

25. There are some moving parts nearby.

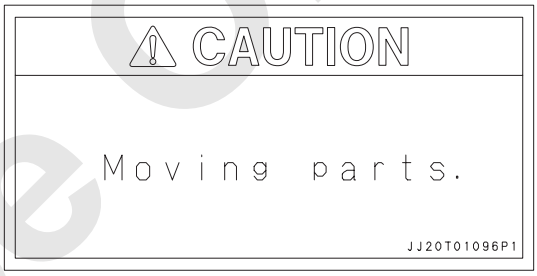

26. This is a connector cover of electrical wiring of safety device.
    Do not step on and crush.

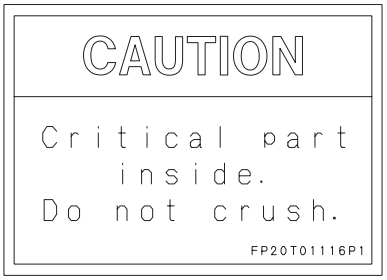

27. Taking wrong procedure in boom assembly or disassembly may cause boom falling off and person may get injured.
    Do not allow any person to enter the inside or under the boom during assembly or disassembly.

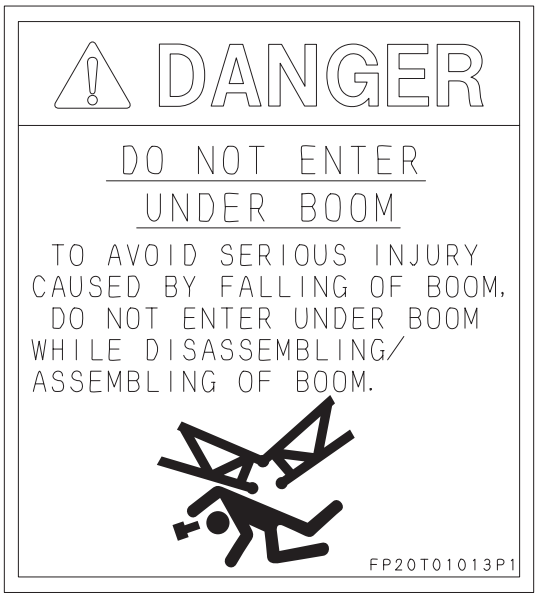

Reference Only

28. Taking wrong method in using the spreader guide installed on the boom base may damage the spreader guide.
    Set the spreader guide to the stowed position except when the upper spreader is connected is connected to the boom base.

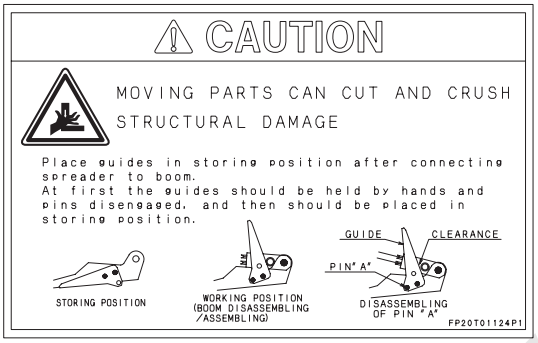

29. Taking the wrong installing direction when the rope sockets are installed to the boom tip and jib tip, may damage the boom or may break the wire rope.
    Install the rope socket in the proper direction.

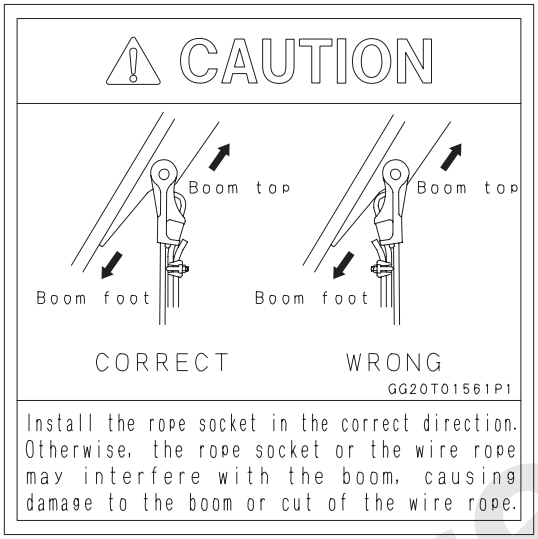

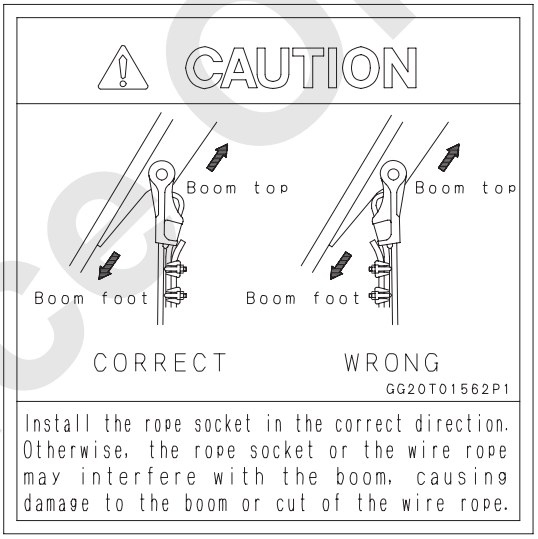

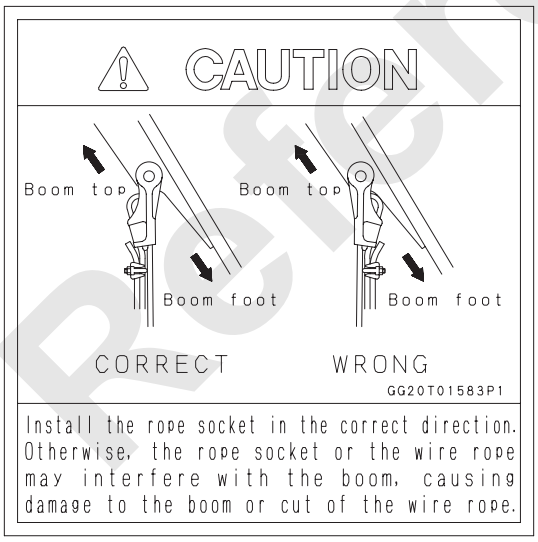

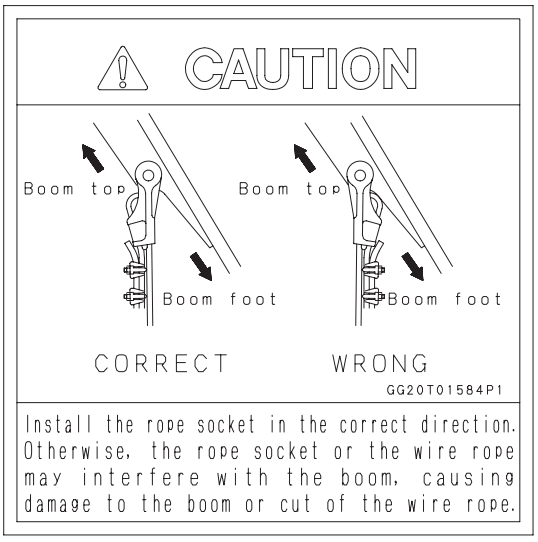

Reference Only

30. Free fall work of load may cause dropping the load by mishandling.
    Use power lowering of load in the crane work.
    (Even on neutral free side, power lowering is possible by turning the lever to lowering side.)

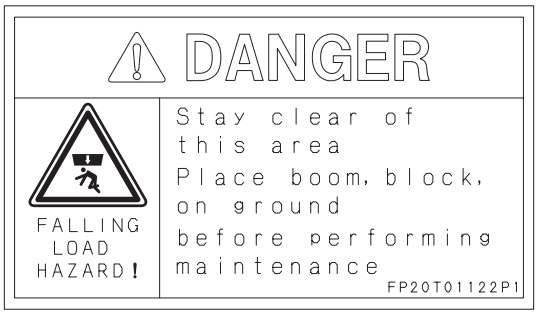

31. When fill the water and/or diesel fuel etc. to this tank is danger and may lead to the faults.
    Fill the specified DEF/AdBlue® only.

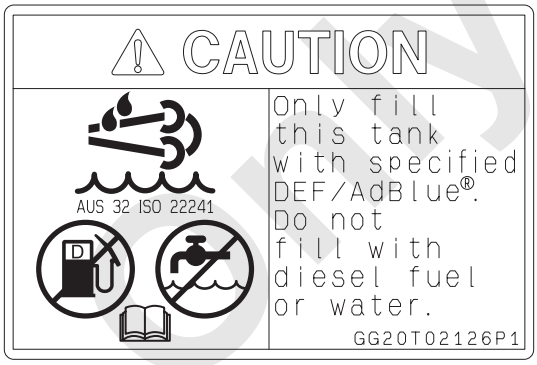

32. One of the drum may stop rotation when the front and rear drums are used at the same time.
    Do not use the front and the rear drums together at the same time.

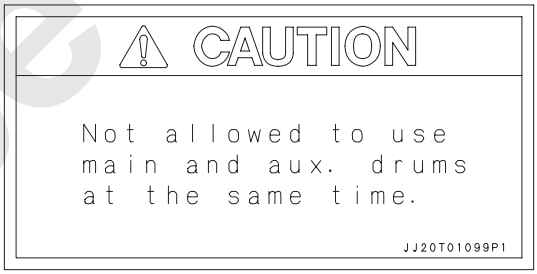

Reference Only

PRECAUTIONS FOR INSPECTION AND MAINTENANCE

1. Service and maintenance must be performed only by authorized personnel who are qualified in compliance with a relevant law or regulation.

2. Regular maintenance or inspection should be quickly performed after shutting down the machine and ensuring safety to personnel and equipment.
   Post an “INSPECTION IN PROGRESS. DO NOT START.” warning sign on a readily visible location.

GENERAL SAFETY PRECAUTIONS

1. Wear safety shoes, helmets and clothing suitable for the job. Also use protective goggles, mask, gloves, etc., as required.

2. To ensure safe and correct maintenance, carefully study this SHOP MANUAL and get fully familiar with the instructions in it.

3. Place the machine in a safe place. Always maintain safe clearance around the machine.

4. Before starting crane operation, hold a safety meeting. Also, make agreement on standardized hand signals.

5. When inspecting or handling the battery or oil, do not use exposed flame nearby.
   To avoid fire accident, only use explosion-proof lighting equipment.

6. Start an inspection or maintenance work only after shutting down the engine.

7. Certain machine components remain hot immediately after the engine is shut down. Do not touch them.

8. Before removing the radiator cap, wait until the coolant water gets sufficiently cool. Next, carefully loosen the cap and release radiator pressure, and them remove the cap.

9. Before inspecting or maintaining an electrical system on the machine, turn the power off the machine by, for example, disconnecting the battery cables.

10. When working at elevated place, always wear a safety harness.

11. When leaving the operator’s cab for an inspection or maintenance work, post an “INSPECTION IN PROGRESS. DO NOT START.” warning sign on a readily visible location. Also, lock the cab for security.

12. Before starting a cleaning or lubrication work on the machine, always shut down the engine.

13. Use genuine Manitowoc replacement parts and recommended oils only.

14. Always keep the oil containers clean. Protect them against ingress of dust or moisture. Also, fill clean, fresh oils only.

15. Once a maintenance work is complete, clean the machine.
    Protect grease nipples, breathers, and oil level gages against ingress of dust.

16. Clean the inspection area to allow detecting faulty such as oil leak, crack or looseness easily if existed.

Reference Only

17. During machine washing, do not allow high pressure steam to be directly applied to electrical components and connectors.

18. After removing O-rings, oil seals, gaskets, etc., clean the mounting seats. Then, install new O-rings, oil seals, gaskets, etc. Also, ensure to thinly apply oil to the seal faces of these parts before installation.

19. Before disconnecting pressurized piping, release the inside pressure.

20. CAUTIONs for repair work with welding: Turn OFF the key switch and disconnect the negative terminal on battery to power off the electrical circuit. Provide grounding within 1 meter from a weld area and remove electronic components (for example, controller) to prevent possible damage.

21. Dispose industrial wastes according to a relevant law or regulation.

22. Be extremely careful during an inspection or maintenance work under the carrier. Remember the possibility of being crashed.
    When jacking up the machine for an inspection or maintenance work, place blocks below to prevent accidental falling.

23. Provide positive ventilation when refilling oils or fuel, rinsing parts, or starting the engine.

24. To remove a heavy component (20 kg or heavier), use a crane, etc. Always keep safety in mind.

25. Illegal, unauthorized, or nonconforming modification is strictly prohibited.

26. Do not allow oil or dust to deposit around the engine. Otherwise, fire accident can result.
    Clean the oil or dust adhered to.

27. Place removed attachments and components safely so that they do not drop or fall down.

28. Always use correct tools that have been well maintained.

29. To prevent personnel from being caught by a running fan, belt, shaft etc, shut down the engine before starting an inspection or maintenance work.

30. Battery fluid and oils are harmful to human health. If touching any of these materials, immediately wash it away.

31. When lifting a load with a crane, first confirm that a load is lifted off the ground surely and then continue lifting work.

Reference Only

Reference Only

1. REFERENCE MATERIALS

1.1 11000-1 SPECIFICATION 1-1
1.1.1 CRANE OUTSIDE DIMENSION 1-1
1.1.2 CRANE SPECIFICATION, PERFORMANCE 1-2
1.1.3 CRANE WORKING RANGES 1-4
1.2 11000-1 DIMENSION, WEIGHT OF EACH COMPONENT 1-7
1.2.1 BASE MACHINE 1-7
1.2.2 COUNTERWEIGHT WITH SELF REMOVAL DEVICE 1-9
1.2.3 ATTACHMENT 1-10
1.3 11000-1 CLAMSHELL RATED LOADS (OPTION) 1-12
1.4 11000-1 SWING AND TRAVEL STABILITY 1-16
1.5 11000-1 TRAVEL ALLOWABLE SLOPE ANGLE 1-19
1.5.1 CRANE ATTACHMENT INSTALLED : BOOM INSERT CONFIGURATION 1-19
1.6 ENGINE MAIN SPECIFICATION 1-25

Reference Only

Reference Only

1. REFERENCE MATERIALS

1.1 10000A-1 SPECIFICATION

1.1.1 CRANE OUTSIDE DIMENSION

10000A-1

Unit : mm (ft. in.)

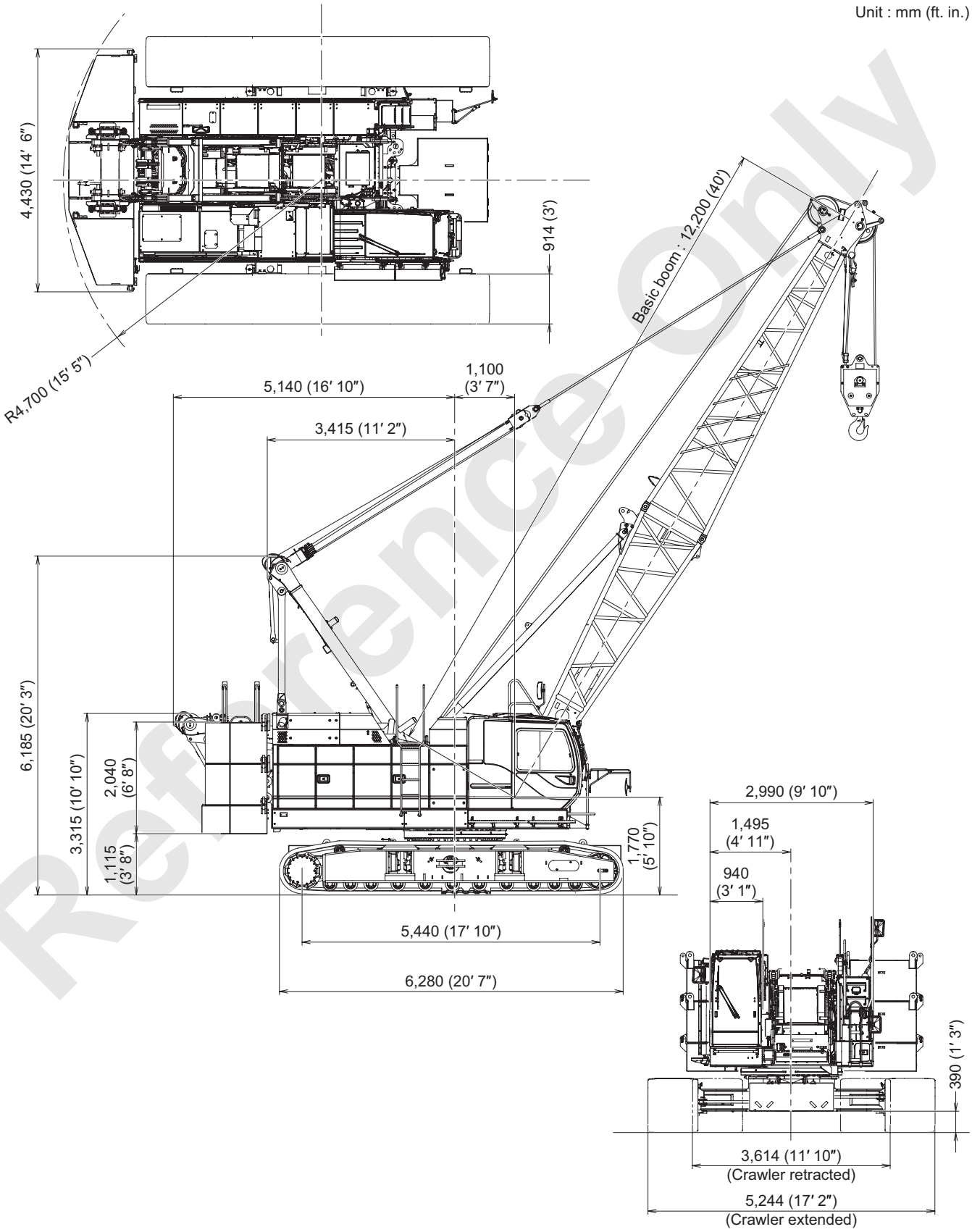

Reference Only

1.1.2 CRANE SPECIFICATION, PERFORMANCE

10000A-1

Type	Full swing, crawler type	
Max. rated load × work radius	99.8 t × 3.35 m (220,000 lbs × 11')	
Boom length		
• Basic boom	12.2 m (40')	
• Maximum boom	61.0 m (200')	
• Crane jib	9.1 m (30') to 18.3 m (60')	
• Maximum boom and jib	57.9 m (190') Boom + 18.3 m (60') Jib	
Work speed		Wire rope dia.
• Front / Rear hoisting rope speed	120 to 3 m/min (390 to 10 ft/min)	26 mm
• Front / Rear lowering rope speed	120 to 3 m/min (390 to 10 ft/min)	
• Boom raising rope speed	70 to 2 m/min (230 to 6.6 ft/min)	16 mm
• Boom lowering rope speed	70 to 2 m/min (230 to 6.6 ft/min)	
• Third hoisting rope speed (option)	120 to 3 m/min (390 to 10 ft/min)	22 mm
• Third lowering rope speed (option)	120 to 3 m/min (390 to 10 ft/min)	
• Swing speed	4.0 min^{-1} (4.0 rpm)	
• Travel speed	1.7/1.1 km/h (1.1/0.72 MPH)	
Gradability	40%	
Working weight *1	90.05 t (198,500 lbs)	
Average ground pressure *1	88.9 kPa (12.9 psi)	
Engine		
• Engine name	Hino J08E-VV	
• Engine out put	213 kW/2,100 min^{-1} (286 HP/2,100 rpm)	

*1 Crane (12.2 m [40'], Without rear drum rope, Without main hook)

Note

The wire rope speeds described above are the value of the drum first layer.
Each wire rope speed varies depend on the load.

Reference Only

10000A-1

OUTSIDE DIMENSIONS

Unit : mm (ft. in.)

Overall width of cab	2,990 (9′ 10″)
Radius of rear end (counterweight)	4,700 (15′ 5″)
Center of rotation to rear end (low gantry position)	5,140 (16′ 10″)
Center of rotation to boom foot pin (from center of rotation)	1,100 (3′ 7″)
Height from ground to boom foot pin	1,770 (5′ 10″)
Height to top of gantry (working position)	6,185 (20′ 3″)
Height to top of gantry (low gantry position)	3,315 (10′ 10″)
Counterweight ground clearance	1,115 (3′ 8″)
Overall length of crawlers	6,280 (20′ 7″)
Distance between centers of tumblers	5,440 (17′ 10″)
Overall width of crawlers (extend/retract)	5,244 / 3,614 (17′ 2″ / 11′ 10″)
Width of crawler shoe	914 (3′)
Ground clearance of carbody	390 (1′ 3″)

Reference Only

1.1.3 CRANE WORKING RANGES

1. Crane working ranges

10000A-1

Unit : m (ft.)

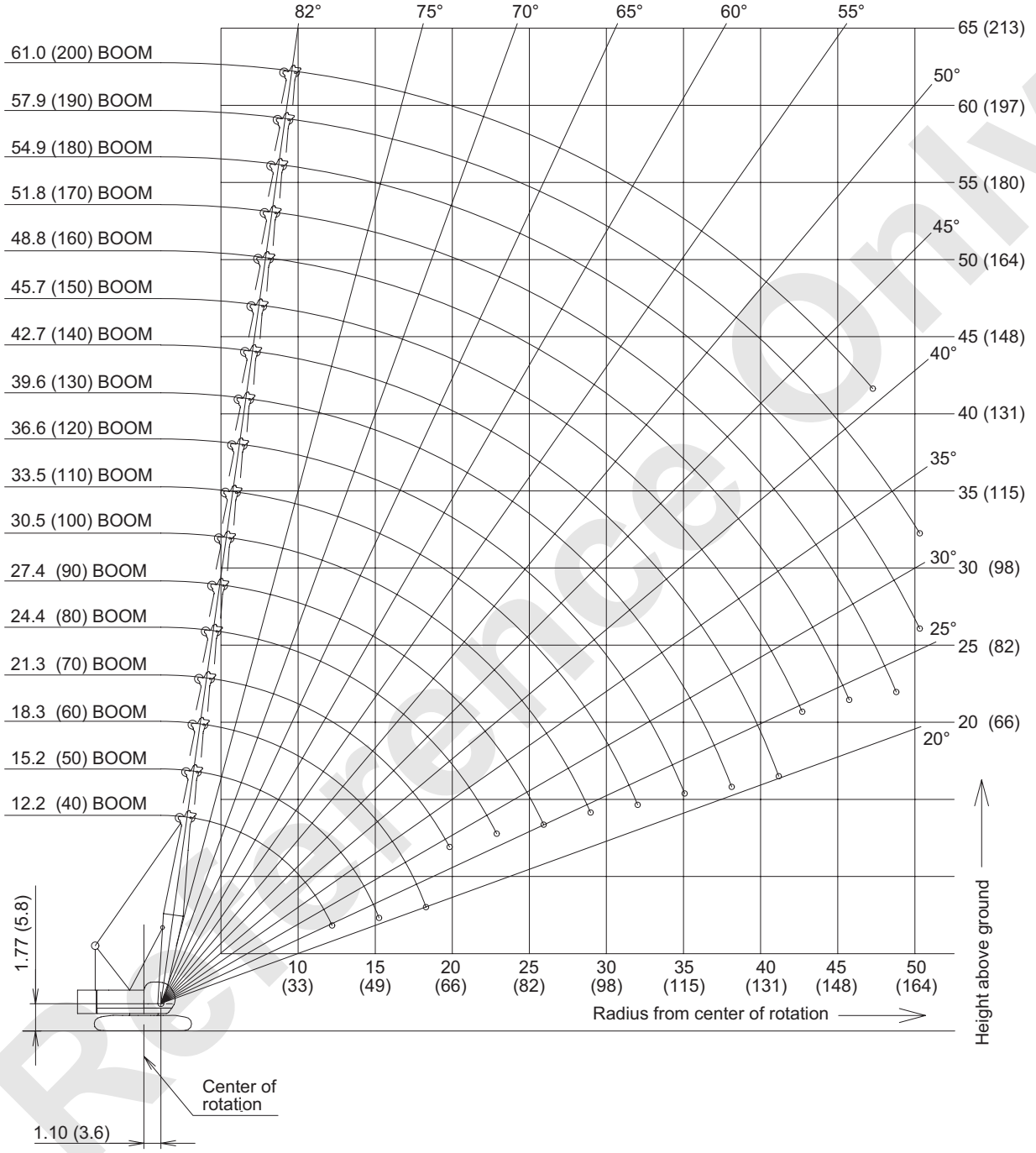

Reference Only

2. Jib working range

(1) Offset angle 10 degrees

10000A-1

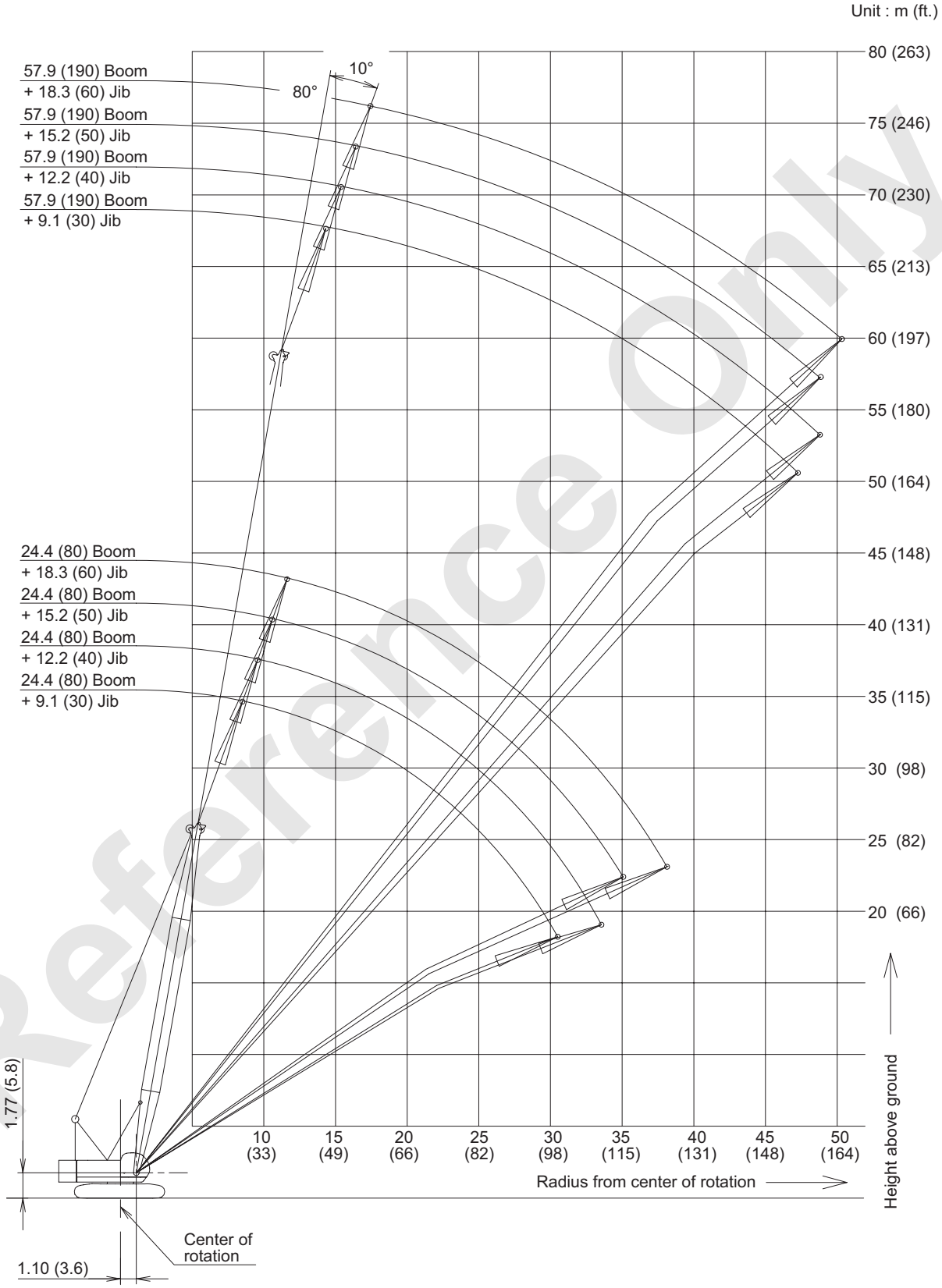

Reference Only

(2) Offset angle 30 degrees

10000A-1

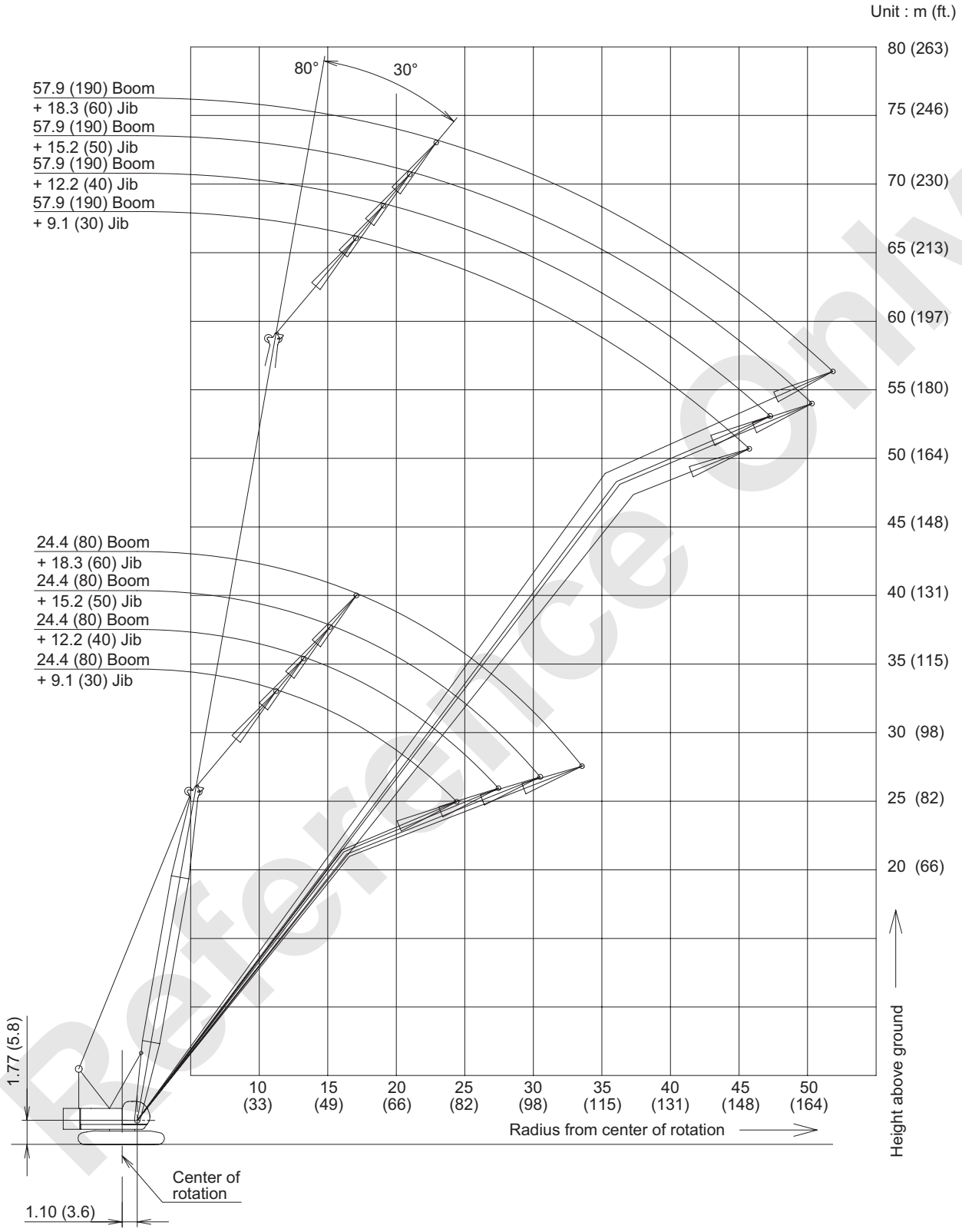

Reference Only

1.2 10000A-1 DIMENSION, WEIGHT OF EACH COMPONENT

Dimension and weight of each component when disassembled is shown here.
Use this as reference value.

1.2.1 BASE MACHINE

10000A-1

Name			Dimension mm : (ft. in.)	Weight : kg (lbs)
Transportation configuration 1	Gantry	○	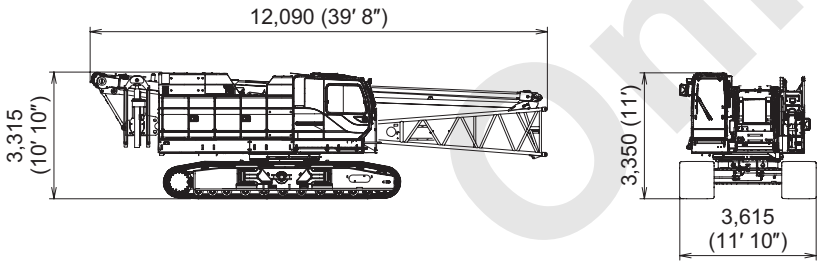	43,430 (95,800)
	Boom base	○		
	Boom drum	○		
	Wire rope (Front, rear, boom drum)	○		
	Self removal device	○		
	Side step	○		
	Crawler	○		
	Translifter (option)	×		
Transportation configuration 2	Gantry	○	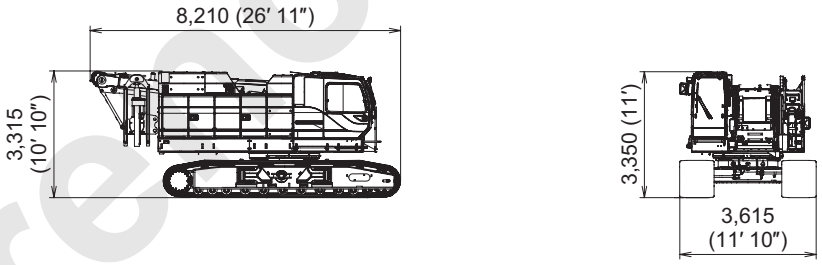	41,375 (91,200)
	Boom base	×		
	Boom drum	○		
	Wire rope (Front, rear, boom drum)	○		
	Self removal device	○		
	Side step	○		
	Crawler	○		
	Translifter (option)	×		
Transportation configuration 3	Gantry	○	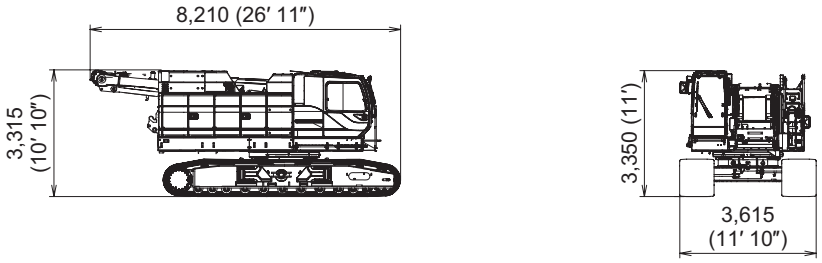	40,475 (89,300)
	Boom base	×		
	Boom drum	○		
	Wire rope (Front, rear, boom drum)	○		
	Self removal device	×		
	Side step	○		
	Crawler	○		
	Translifter (option)	×		

○ : With × : Without

Reference Only

10000A-1

Name			Dimension mm : (ft. in.)	Weight : kg (lbs)
Transportation configuration 4	Gantry	○	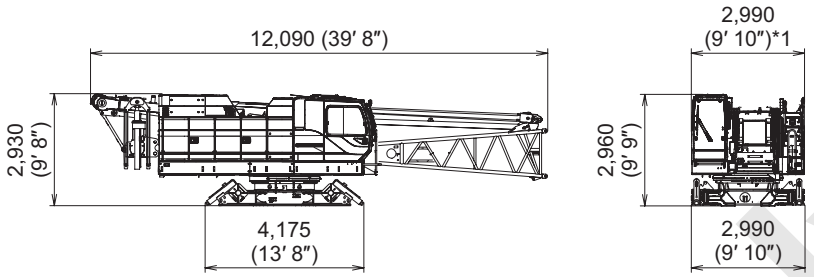	29,450 (64,900)
	Boom base	○		
	Boom drum	○		
	Wire rope (Front, rear, boom drum)	○		
	Self removal device	○		
	Side step	×		
	Crawler	×		
	Translifter (option)	○		
Transportation configuration 5	Gantry	○	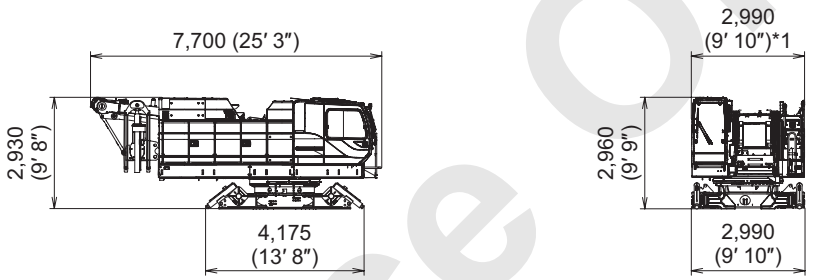	27,395 (60,400)
	Boom base	×		
	Boom drum	○		
	Wire rope (Front, rear, boom drum)	○		
	Self removal device	○		
	Side step	×		
	Crawler	×		
	Translifter (option)	○		
Crawler			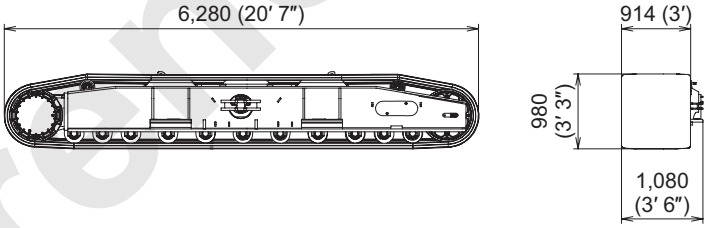	7,550 (16,700)
Translifter (option)			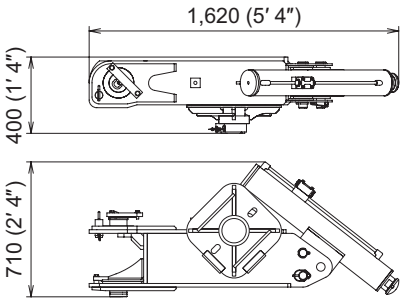	290 (640) / 1 piece

○ : With × : Without

*1 With the side step on cabin side : 3,160 (10′ 4″)
With the side steps on the both side : 3,340 (11′)

Reference Only

1.2.2 COUNTERWEIGHT WITH SELF REMOVAL DEVICE

10000A-1

Name	Dimension mm : (ft. in.)	Weight : kg (lbs)
Counterweight (1)	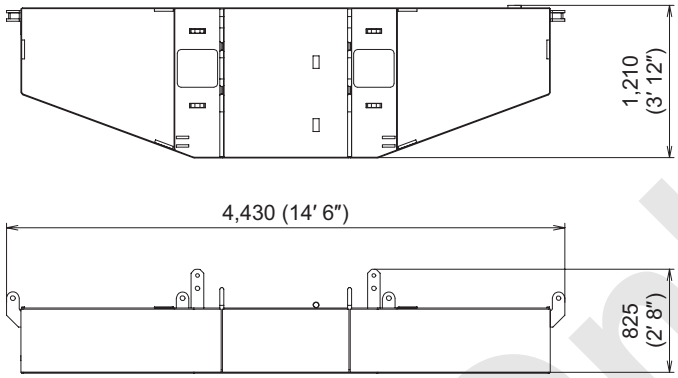	8,310 (18,300)
Right side Counterweight (3),(5)	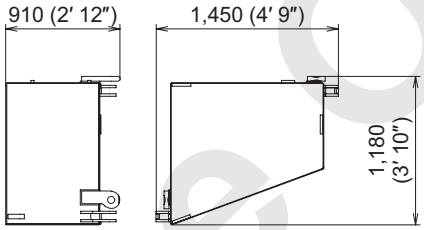	5,750 (12,700) / 1 piece
Left side Counterweight (2),(4)	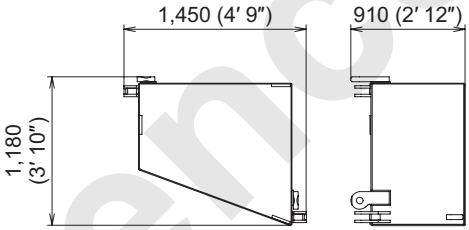	5,750 (12,700) / 1 piece
Carbody weight (1), (2)	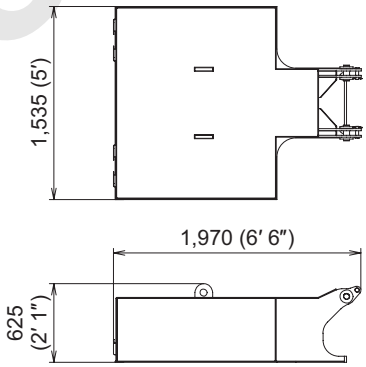	7,200 (15,900) / 1 piece
Self removal unit	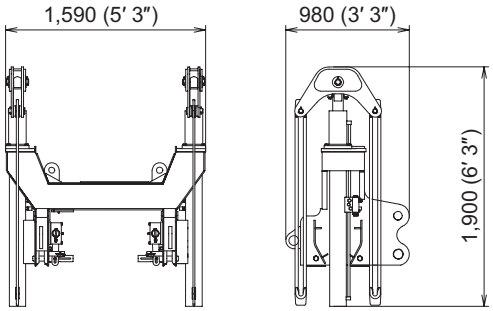	860 (1,900)

Reference Only

1.2.3 ATTACHMENT

10000A-1

Name	Dimension mm : (ft. in.)	Weight : kg (lbs)
Boom tip	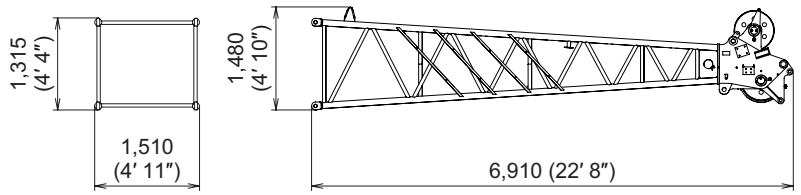	1,205 (2,700)
Boom base	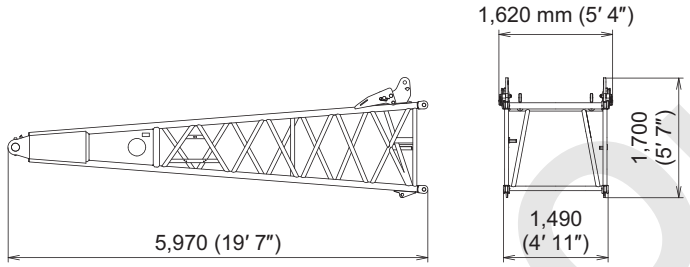	1,210 (2,700)
3.0 m (10') Boom insert	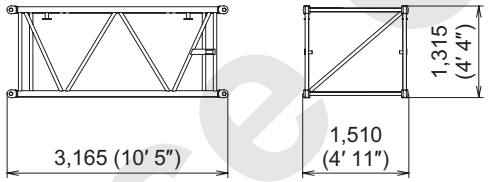	310 (680)
6.1 m (20') Boom insert	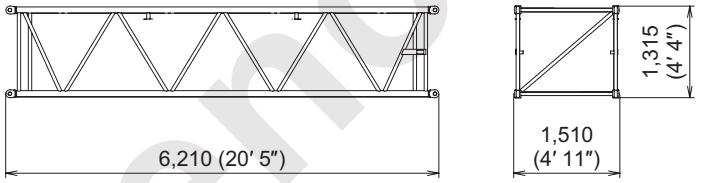	525 (1,200)
12.2 m (40') Boom insert	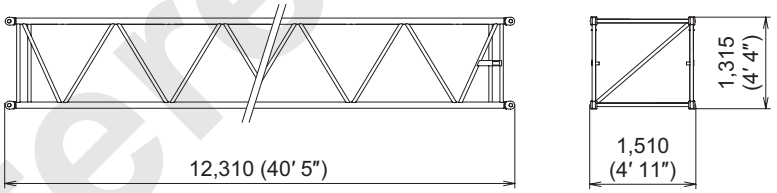	965 (2,100)
12.2 m (40') Boom insert with lug	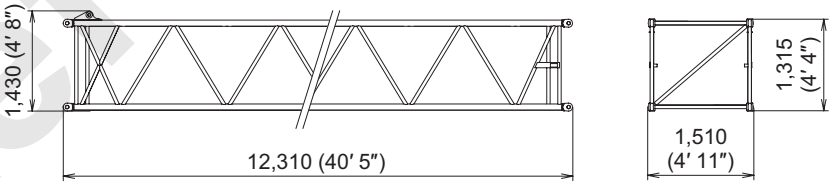	980 (2,200)
Backstop	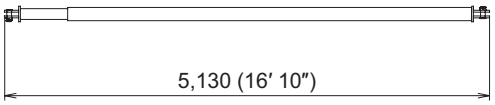	270 (600)

Reference Only

10000A-1

Name	Dimension mm : (ft. in.)	Weight : kg (lbs)
Jib tip	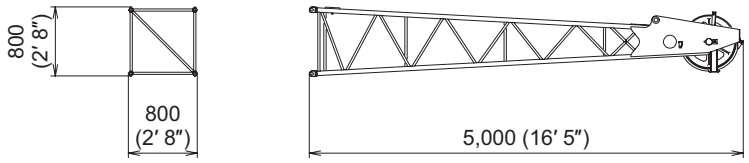	280 (620)
Jib base	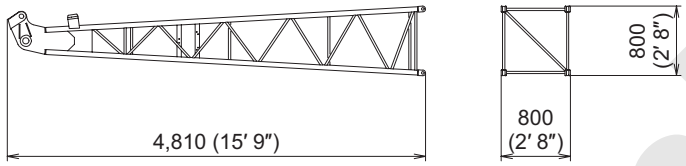	200 (440)
3.0 m (10') Jib insert	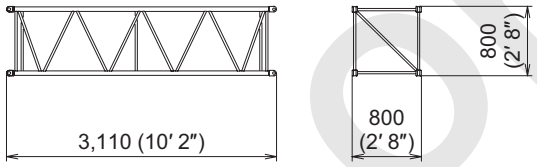	100 (220)
6.1 m (20') Jib insert	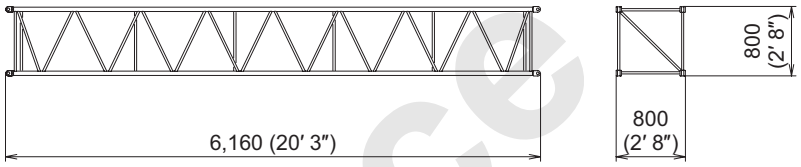	180 (400)
Jib strut	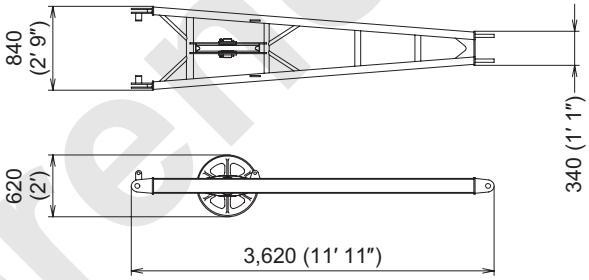	250 (550)
Auxiliary sheave	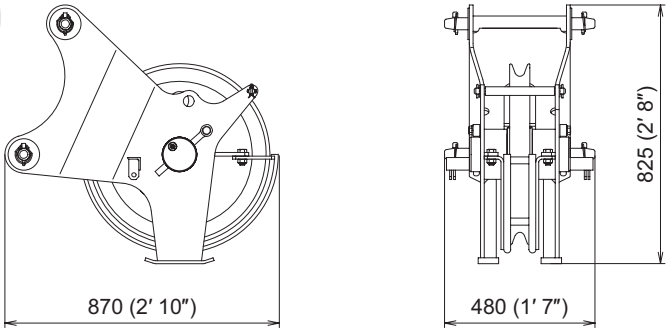	195 (430)
Upper spreader	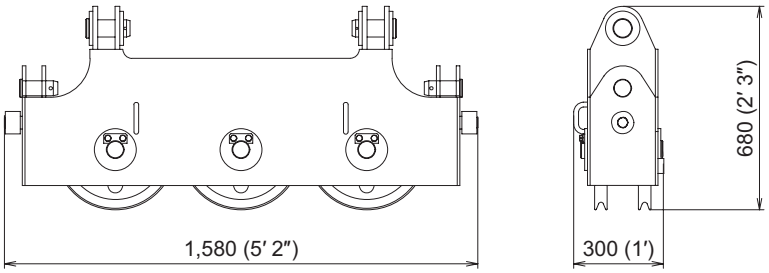	280 (620)

Reference Only

1.3 10000A-1 CLAMSHELL RATED LOADS (OPTION)

CLAMSHELL SPECIFICATION

1. Rated loads included in the charts are the maximum allowable freely suspended loads at a given boom length, boom angle and load radius, and have been determined for the machine standing level on firm supporting surface under ideal operating conditions.
   The user must limit or de-rate rated loads to allow for adverse conditions (such as soft or uneven ground, out-of-level conditions, wind, side loads, pendulum action, jerking or sudden stopping of loads, inexperience of personnel, multiple machine lifts, and traveling with a load).

2. Rated loads do not exceed 66% of minimum tipping loads.
   Rated loads based on factors other than machine stability such as structural competence are shown by asterisk * in the charts.

3. The machine must be reeved and set-up as stated in the operation manual and all the instruction manuals.
   If these manuals are missing, obtain replacements.

- Boom backstops are required for all boom lengths.
- Gantry must be fully raised position for all operations.
- Crawlers must be fully extended and be locked in position.
- The crane must be leveled to within 1% on a firm supporting surface.
- 43,700 lbs Counterweight and without carbody weight.

4. Do not attempt to lift where no radius is shown on the load chart as crane may tip or collapse.

5. Attempting to lift more than rated loads may cause machine to tip or collapse.
   Do not tip machine to determine rated loads.

6. Weight of bucket, slings and other lifting devices are a part of the total load.
   Their total weight must be subtracted from the rated load to obtain the weight that can be lifted.

Reference Only

7. The boom should be erected over the front of the crawlers, not laterally.

8. Least stable position is over the side.

MAXIMUM LOAD FOR MAIN BOOM

No. of Part of Line	1
Maximum Loads (lbs)	22,000

9. Rated loads listed later is to be applied only to the machine as manufactured and designed by manufacture.
   Do not apply any modification to this machine and do not use of this machine other than the specified.

10. ASSEMBLING THE COUNTERWEIGHT

- 43,700 lbs Counterweight
- Without carbody counterweight.

Operation of this equipment in excess of rated loads or disregard of instruction voids the warranty.

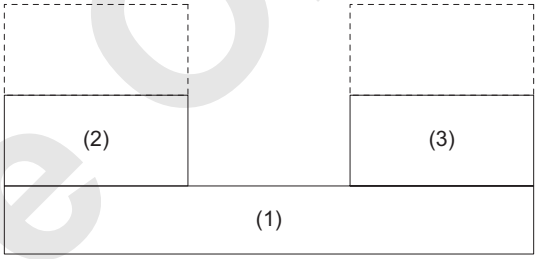

COUNTERWEIGHTS

CARBODY WEIGHTS

Reference Only

10000A-1

CLAMSHELL CAPACITIES IN POUNDS
THREE COUNTERWEIGHTS (43,700 lbs)
WITHOUT CARBODY WEIGHTS (0 lbs)
CRAWLERS : EXTENDED POSITION

40' Boom		
Load Radius (ft.)	Boom Angle (deg.)	360° Rated Load (lbs)
22.0	63.7	22,000 *
24.0	60.5	22,000 *
26.0	57.1	22,000 *
28.0	53.5	22,000 *
30.0	49.8	22,000 *
32.0	45.9	22,000 *
34.0	41.7	21,400 *
36.0	37.0	20,200 *
38.0	31.8	19,200 *
40.0	25.7	18,200 *

50' Boom		
Load Radius (ft.)	Boom Angle (deg.)	360° Rated Load (lbs)
26.0	64.3	22,000 *
28.0	61.7	22,000 *
30.0	59.0	22,000 *
32.0	56.3	22,000 *
34.0	53.5	21,400 *
36.0	50.5	20,200 *
38.0	47.4	19,200 *
40.0	44.2	18,200 *
42.0	40.7	17,300 *
44.0	37.0	16,500 *
46.0	32.9	15,800 *
48.0	28.3	15,200 *

60' Boom		
Load Radius (ft.)	Boom Angle (deg.)	360° Rated Load (lbs)
30.0	64.6	22,000 *
32.0	62.5	22,000 *
34.0	60.3	21,400 *
36.0	58.1	20,200 *
38.0	55.8	19,200 *
40.0	53.4	18,200 *
42.0	51.0	17,300 *
44.0	48.4	16,500 *
46.0	45.8	15,800 *
48.0	43.0	15,200 *
50.0	40.1	14,600 *
52.0	37.0	14,000 *
54.0	33.6	13,500 *
56.0	29.9	13,000 *
58.0	25.7	12,500 *

70' Boom		
Load Radius (ft.)	Boom Angle (deg.)	360° Rated Load (lbs)
34.0	64.9	21,400 *
36.0	63.1	20,200 *
38.0	61.2	19,200 *
40.0	59.3	18,200 *
42.0	57.4	17,300 *
44.0	55.4	16,500 *
46.0	53.4	15,800 *
48.0	51.3	15,200 *
50.0	49.1	14,600 *
52.0	46.9	14,000 *
54.0	44.6	13,500 *
56.0	42.2	13,000 *
58.0	39.6	12,500 *
60.0	37.0	12,100 *
62.0	34.1	11,700 *
64.0	31.0	11,400 *
66.0	27.6	11,000 *

80' Boom		
Load Radius (ft.)	Boom Angle (deg.)	360° Rated Load (lbs)
38.0	65.1	19,200 *
40.0	63.5	18,200 *
42.0	61.9	17,300 *
44.0	60.2	16,500 *
46.0	58.6	15,800 *
48.0	56.9	15,200 *
50.0	55.1	14,600 *
52.0	53.3	14,000 *
54.0	51.5	13,500 *
56.0	49.6	13,000 *
58.0	47.7	12,500 *
60.0	45.7	12,100 *
62.0	43.7	11,700 *
64.0	41.5	11,400 *
66.0	39.3	11,000 *
68.0	37.0	10,700 *
70.0	34.5	10,400 *
72.0	31.8	10,100 *
74.0	28.9	9,800 *
76.0	25.7	9,400 *

90' Boom		
Load Radius (ft.)	Boom Angle (deg.)	360° Rated Load (lbs)
42.0	65.2	17,300 *
44.0	63.8	16,500 *
46.0	62.4	15,800 *
48.0	60.9	15,200 *
50.0	59.5	14,600 *
52.0	58.0	14,000 *
54.0	56.4	13,500 *
56.0	54.9	13,000 *
58.0	53.3	12,500 *
60.0	51.7	12,100 *
62.0	50.0	11,700 *
64.0	48.3	11,400 *
66.0	46.6	11,000 *
68.0	44.8	10,700 *
70.0	43.0	10,400 *
72.0	41.0	10,100 *
74.0	39.0	9,700
76.0	36.9	9,200
78.0	34.7	9,000
80.0	32.4	8,500
82.0	29.9	8,300
84.0	27.2	7,900

Reference Only

10000A-1

CLAMSHELL CAPACITIES IN POUNDS
THREE COUNTERWEIGHTS (43,700 lbs)
WITHOUT CARBODY WEIGHTS (0 lbs)
CRAWLERS : EXTENDED POSITION

100' Boom		
Load Radius (ft.)	Boom Angle (deg.)	360° Rated Load (lbs)
46.0	65.4	15,800 *
48.0	64.1	15,200 *
50.0	62.8	14,600 *
52.0	61.5	14,000 *
54.0	60.2	13,500 *
56.0	58.8	13,000 *
58.0	57.5	12,500 *
60.0	56.1	12,100 *
62.0	54.7	11,700 *
64.0	53.3	11,400 *
66.0	51.8	11,000 *
68.0	50.4	10,700 *
70.0	48.8	10,300
72.0	47.3	9,900
74.0	45.7	9,400
76.0	44.1	9,000
78.0	42.4	8,800
80.0	40.6	8,300
82.0	38.8	8,100
84.0	36.9	7,700
86.0	35.0	7,400
88.0	32.9	7,200
90.0	30.7	7,000
92.0	28.3	6,800
94.0	25.8	6,600

110' Boom		
Load Radius (ft.)	Boom Angle (deg.)	360° Rated Load (lbs)
56.0	62.0	11,900 *
58.0	60.8	11,700 *
60.0	59.6	11,600 *
62.0	58.3	11,300 *
64.0	57.1	11,100 *
66.0	55.8	10,800 *
68.0	54.6	10,400 *
70.0	53.3	10,100
72.0	52.0	9,700
74.0	50.6	9,300
76.0	49.2	8,900
78.0	47.8	8,500
80.0	46.4	8,200
82.0	45.0	7,900
84.0	43.4	7,500
86.0	41.9	7,200
88.0	40.3	7,000
90.0	38.6	6,800
92.0	36.9	6,600
94.0	35.1	6,400
96.0	33.3	6,200
98.0	31.3	5,900
100.0	29.2	5,700
102.0	27.0	5,500
104.0	24.5	5,300

120' Boom		
Load Radius (ft.)	Boom Angle (deg.)	360° Rated Load (lbs)
56.0	64.5	11,400 *
58.0	63.4	11,300 *
60.0	62.3	11,200 *
62.0	61.3	11,000 *
64.0	60.2	10,800 *
66.0	59.0	10,600 *
68.0	57.9	10,200 *
70.0	56.8	9,900
72.0	55.6	9,500
74.0	54.5	9,100
76.0	53.3	8,800
78.0	52.1	8,400
80.0	50.8	8,100
82.0	49.6	7,700
84.0	48.3	7,400
86.0	47.0	7,100
88.0	45.7	6,800
90.0	44.3	6,600
92.0	42.9	6,400
94.0	41.5	6,200
96.0	40.0	6,000
98.0	38.5	5,700
100.0	36.9	5,500
102.0	35.3	5,300
104.0	33.6	5,100
106.0	31.8	5,000

Reference Only

1.4 10000A-1 SWING AND TRAVEL STABILITY

The stability while swinging and traveling of the machine is to be varied depending on the mass of counterweight, condition of the attachment, extension or retraction of the crawler and traveling on the slope. The operation must be started after confirm the machine stability while swinging and traveling by referring with following table.

1. The table above shows the values for operation on firm ground.
   On a weak ground, operate with care after improving the ground.

2. Swinging on a trailer is prohibited.

3. Maximum slope angle is 21.8 degrees (40%).
   This may become lower depending on condition (ground, crane configuration).

4. Traveling “forward” means that the counterweight is at the lower side of the slope, and “backward” is the counterweight is at the higher side of the slope.

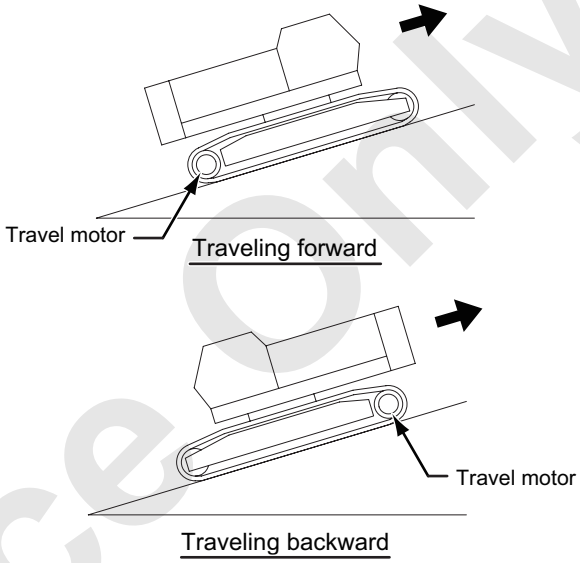

Reference Only

10000A-1

TABLE FOR STABILITY (WITHOUT CARBODY WEIGHT)

Attachment	Counterweight	All-round swing		Travel on slope	
		Crawler extend	Crawler retract	Forward	Backward
Without attachment (Base machine only)	Without : 0 t	○	○	○	○
	No.1 : 8.31 t (18,320 lbs)	○	△ (No abrupt lever control)	△ (Slope 16 degrees or less)	○
	No.1 to No.2 : 19.81 t (43,674 lbs)	△ (No abrupt lever control)	×	×	△ (No abrupt lever control)
	No.1 to No.3 : 31.31 t (69,028 lbs)	×	×	×	×
With boom base (Boom angle : 10 degrees or less)	Without : 0 t	○	○	○	○
	No.1 : 8.31 t (18,320 lbs)	○	○	○	○
	No.1 to No.2 : 19.81 t (43,674 lbs)	○	×	×	○
	No.1 to No.3 : 31.31 t (69,028 lbs)	×	×	×	×
With basic boom (Boom angle : 30 degrees or less)	Without : 0 t	○	○	○	○
	No.1 : 8.31 t (18,320 lbs)	○	○	○	○
	No.1 to No.2 : 19.81 t (43,674 lbs)	○	×	△ (Slope 7 degrees or less)	○
	No.1 to No.3 : 31.31 t (69,028 lbs)	△ (No abrupt lever control)	×	×	△ (No abrupt lever control)

○ : Allowed △ : With restriction × : Not allowed

Reference Only

10000A-1

TABLE FOR STABILITY (WITH CARBODY WEIGHT)

Attachment	Counterweight	All-round swing		Travel on slope	
		Crawler extend	Crawler retract	Forward	Backward
Without attachment (Base machine only)	Without : 0 t	○	○	○	○
	No.1 : 8.31 t (18,320 lbs)	○	○	○	○
	No.1 to No.2 : 19.81 t (43,674 lbs)	○	×	△ (Slope 8 degrees or less)	○
	No.1 to No.3 : 31.31 t (69,028 lbs)	△ (No abrupt lever control)	×	×	△ (No abrupt lever control)
With boom base (Boom angle : 10 degrees or less)	Without : 0 t	○	○	○	○
	No.1 : 8.31 t (18,320 lbs)	○	○	○	○
	No.1 to No.2 : 19.81 t (43,674 lbs)	○	×	△ (Slope 12 degrees or less)	○
	No.1 to No.3 : 31.31 t (69,028 lbs)	△ (No abrupt lever control)	×	×	△ (No abrupt lever control)
With basic boom (Boom angle : 30 degrees or less)	Without : 0 t	○	○	○	○
	No.1 : 8.31 t (18,320 lbs)	○	○	○	○
	No.1 to No.2 : 19.81 t (43,674 lbs)	○	△ (No abrupt lever control)	△ (Slope 18 degrees or less)	○
	No.1 to No.3 : 31.31 t (69,028 lbs)	○	×	△ (Slope 3 degrees or less)	○

○ : Allowed △ : With restriction × : Not allowed

Reference Only

1.5 10000A-1 TRAVEL ALLOWABLE SLOPE ANGLE

1.5.1 CRANE ATTACHMENT INSTALLED : BOOM INSERT CONFIGURATION

CAUTION

Do not travel with the symbol of "–" in the table.
The machine may possible turnover.
Failure to observe this precaution may result in a serious accident.

If the machine has to travel by some reason, observe the following points.

- Do not travel with a load lifted.
- Travel with low speed and gently.
- Travel on the flat and firm ground.
- Ensure to check the ground condition and travel on the slope angle smaller than shown in the chart.
- Travel straight against slope.
- Provide the gentle slope at the beginning and end positions of slope.

TRAVEL UPWARD DOWNWARD ON SLOPE (θ : ALLOWABLE ANGLE)

Forward	Backward
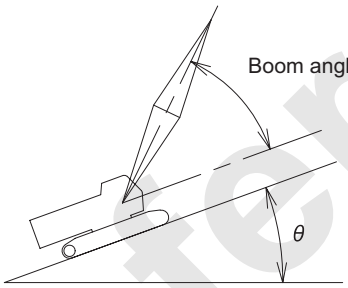	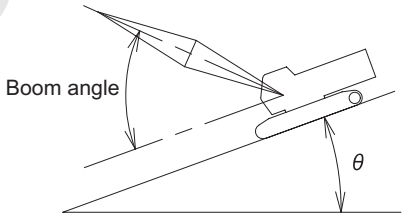

Reference Only

1. Crane travel allowable slope angle

(1) Without Aux. sheave

10000A-1

(Unit : Degrees)

Boom length m (ft.)	Forward			Backward		
	Boom angle			Boom angle		
	35	40	50	40	50	60
12.2 (40)	5	5	4	8	8	8
15.2 (50)	7	6	5	8	8	8
18.3 (60)	8	8	6	8	8	8
21.3 (70)	8	8	6	8	8	8
24.4 (80)	8	8	7	8	8	8
27.4 (90)	8	8	8	8	8	8
30.5 (100)	8	8	8	8	8	8
33.5 (110)	8	8	8	8	8	8
36.6 (120)	8	8	8	8	8	8
39.6 (130)	8	8	8	8	8	8
42.7 (140)	8	8	8	8	8	8
45.7 (150)	8	8	8	8	8	8
48.8 (160)	8	8	8	7	8	8
51.8 (170)	8	8	8	5	6	8
54.9 (180)	8	8	8	3	4	6
57.9 (190)	8	8	8	1	2	5
61.0 (200)	8	8	8	-	1	3

(2) With Aux. sheave

10000A-1

(Unit : Degrees)

Boom length m (ft.)	Forward			Backward		
	Boom angle			Boom angle		
	35	40	50	40	50	60
12.2 (40)	5	5	4	8	8	8
15.2 (50)	7	6	5	8	8	8
18.3 (60)	8	8	6	8	8	8
21.3 (70)	8	8	6	8	8	8
24.4 (80)	8	8	7	8	8	8
27.4 (90)	8	8	8	8	8	8
30.5 (100)	8	8	8	8	8	8
33.5 (110)	8	8	8	8	8	8
36.6 (120)	8	8	8	8	8	8
39.6 (130)	8	8	8	8	8	8
42.7 (140)	8	8	8	8	8	8
45.7 (150)	8	8	8	8	8	8
48.8 (160)	8	8	8	7	8	8
51.8 (170)	8	8	8	5	6	8
54.9 (180)	8	8	8	3	4	6
57.9 (190)	8	8	8	1	2	5

Reference Only

2. Fixed jib travel allow slope angle

10000A-1

(Unit : Degrees)

Jib length m (ft.)	9.1 (30)					
Offset angle	10					
Configuration	Forward			Backward		
Boom length m (ft.)	Boom angle			Boom angle		
	35	40	50	40	50	60
24.4 (80)	8	8	8	8	8	8
27.4 (90)	8	8	8	8	8	8
30.5 (100)	8	8	8	8	8	8
33.5 (110)	8	8	8	8	8	8
36.6 (120)	8	8	8	8	8	8
39.6 (130)	8	8	8	8	8	8
42.7 (140)	8	8	8	8	8	8
45.7 (150)	8	8	8	8	8	8
48.8 (160)	8	8	8	8	8	8
51.8 (170)	8	8	8	8	8	8
54.9 (180)	8	8	8	6	8	8
57.9 (190)	8	8	8	2	6	8

(Unit : Degrees)

Jib length m (ft.)	9.1 (30)					
Offset angle	30					
Configuration	Forward			Backward		
Boom length m (ft.)	Boom angle			Boom angle		
	35	40	50	40	50	60
24.4 (80)	8	8	8	8	8	8
27.4 (90)	8	8	8	8	8	8
30.5 (100)	8	8	8	8	8	8
33.5 (110)	8	8	8	8	8	8
36.6 (120)	8	8	8	8	8	8
39.6 (130)	8	8	8	8	8	8
42.7 (140)	8	8	8	8	8	8
45.7 (150)	8	8	8	8	8	8
48.8 (160)	8	8	8	8	8	8
51.8 (170)	8	8	8	8	8	8
54.9 (180)	8	8	8	7	8	8
57.9 (190)	8	8	8	2	6	8

Reference Only

10000A-1

(Unit : Degrees)

Jib length m (ft.)	12.2 (40)					
Offset angle	10					
Configuration	Forward			Backward		
Boom length m (ft.)	Boom angle			Boom angle		
	35	40	50	40	50	60
24.4 (80)	8	8	8	8	8	8
27.4 (90)	8	8	8	8	8	8
30.5 (100)	8	8	8	8	8	8
33.5 (110)	8	8	8	8	8	8
36.6 (120)	8	8	8	8	8	8
39.6 (130)	8	8	8	8	8	8
42.7 (140)	8	8	8	8	8	8
45.7 (150)	8	8	8	8	8	8
48.8 (160)	8	8	8	8	8	8
51.8 (170)	8	8	8	8	8	8
54.9 (180)	8	8	8	4	8	8
57.9 (190)	8	8	8	-	4	8

(Unit : Degrees)

Jib length m (ft.)	12.2 (40)					
Offset angle	30					
Configuration	Forward			Backward		
Boom length m (ft.)	Boom angle			Boom angle		
	35	40	50	40	50	60
24.4 (80)	8	8	8	8	8	8
27.4 (90)	8	8	8	8	8	8
30.5 (100)	8	8	8	8	8	8
33.5 (110)	8	8	8	8	8	8
36.6 (120)	8	8	8	8	8	8
39.6 (130)	8	8	8	8	8	8
42.7 (140)	8	8	8	8	8	8
45.7 (150)	8	8	8	8	8	8
48.8 (160)	8	8	8	8	8	8
51.8 (170)	8	8	8	8	8	8
54.9 (180)	8	8	8	4	8	8
57.9 (190)	8	8	8	-	4	8

Reference Only

10000A-1

(Unit : Degrees)

Jib length m (ft.)	15.2 (50)					
Offset angle	10					
Configuration	Forward			Backward		
Boom length m (ft.)	Boom angle			Boom angle		
	35	40	50	40	50	60
24.4 (80)	8	8	8	8	8	8
27.4 (90)	8	8	8	8	8	8
30.5 (100)	8	8	8	8	8	8
33.5 (110)	8	8	8	8	8	8
36.6 (120)	8	8	8	8	8	8
39.6 (130)	8	8	8	8	8	8
42.7 (140)	8	8	8	8	8	8
45.7 (150)	8	8	8	8	8	8
48.8 (160)	8	8	8	8	8	8
51.8 (170)	8	8	8	7	8	8
54.9 (180)	8	8	8	2	6	8
57.9 (190)	8	8	8	-	2	7

(Unit : Degrees)

Jib length m (ft.)	15.2 (50)					
Offset angle	30					
Configuration	Forward			Backward		
Boom length m (ft.)	Boom angle			Boom angle		
	35	40	50	40	50	60
24.4 (80)	8	8	8	8	8	8
27.4 (90)	8	8	8	8	8	8
30.5 (100)	8	8	8	8	8	8
33.5 (110)	8	8	8	8	8	8
36.6 (120)	8	8	8	8	8	8
39.6 (130)	8	8	8	8	8	8
42.7 (140)	8	8	8	8	8	8
45.7 (150)	8	8	8	8	8	8
48.8 (160)	8	8	8	8	8	8
51.8 (170)	8	8	8	7	8	8
54.9 (180)	8	8	8	2	6	8
57.9 (190)	8	8	8	-	2	7

Reference Only

10000A-1

(Unit : Degrees)

Jib length m (ft.)	18.3 (60)					
Offset angle	10					
Configuration	Forward			Backward		
Boom length m (ft.)	Boom angle			Boom angle		
	35	40	50	40	50	60
24.4 (80)	8	8	8	8	8	8
27.4 (90)	8	8	8	8	8	8
30.5 (100)	8	8	8	8	8	8
33.5 (110)	8	8	8	8	8	8
36.6 (120)	8	8	8	8	8	8
39.6 (130)	8	8	8	8	8	8
42.7 (140)	8	8	8	8	8	8
45.7 (150)	8	8	8	8	8	8
48.8 (160)	8	8	8	8	8	8
51.8 (170)	8	8	8	5	8	8
54.9 (180)	8	8	8	-	4	8
57.9 (190)	8	8	8	-	1	6

(Unit : Degrees)

Jib length m (ft.)	18.3 (60)					
Offset angle	30					
Configuration	Forward			Backward		
Boom length m (ft.)	Boom angle			Boom angle		
	35	40	50	40	50	60
24.4 (80)	8	8	8	8	8	8
27.4 (90)	8	8	8	8	8	8
30.5 (100)	8	8	8	8	8	8
33.5 (110)	8	8	8	8	8	8
36.6 (120)	8	8	8	8	8	8
39.6 (130)	8	8	8	8	8	8
42.7 (140)	8	8	8	8	8	8
45.7 (150)	8	8	8	8	8	8
48.8 (160)	8	8	8	8	8	8
51.8 (170)	8	8	8	5	8	8
54.9 (180)	8	8	8	-	4	8
57.9 (190)	8	8	8	-	1	5

Reference Only

1.6 ENGINE MAIN SPECIFICATION

Engine	10000A-1 : Hino Model J08E-VV diesel engine (complying with the Tier4 & Stage IV Emission Regulations)
Configuration of engine	4 cycle, water cooled, vertical in-line 6, direct injection, turbo-charged, intercooled
Total poston displacement	7.684 L
Rated output	213 kW / 2,100 min^{-1}
Max. torque	1,017 N·m / 1,600 min^{-1}
Specific fuel consumption	212 g / kWh / 2,100 min^{-1}
Dry engine weight	Approx. 719 kg

FUEL CONSUMPTION (REF)

Hourly fuel consumption at engine rated output and at crane works.

Fuel consumption (L/hr)	At rated output	At crane work *1	At foundation work *2
10000A-1 : J08E-VV	54.1	16.2	32.4

*1 Is calculated with the assumption that the average load ratio is 30% for crane work and the fuel consumption is proportional to the load.

*2 Is calculated with the assumption that the average load ratio is 60% for foundation work and the fuel consumption is proportional to the load.

Since the fuel consumption may vary depending on the work content, operators technique and waiting time at actual work, the above figure is for reference only.
The fuel consumption based on energy saving function including G engine mode, G winch mode or auto-idling stop are not considered.

Reference Only

ENGINE PERFORMANCE CURVE

This indicates performance curve of single unit of engine.
This does not considered that the engine performance drops due to crane work.

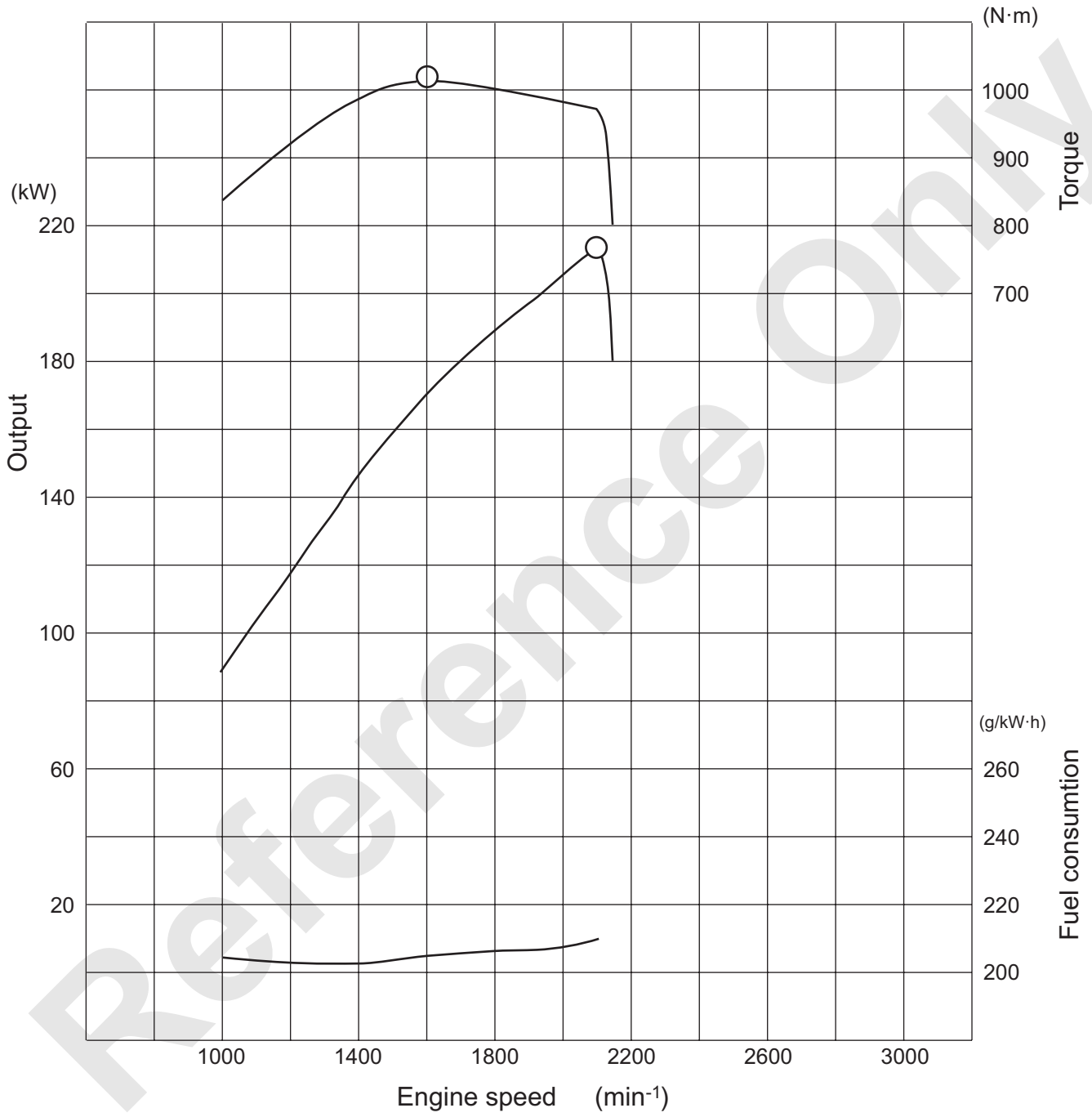

Reference Only

2. MAINTENANCE STANDARDS TEST PROCEDURES

2.1 MAINTENANCE STANDARD 2-1
2.1.1 PIN, BUSHING, SPRING, LINING AND SHEAVE 2-1
2.1.2 TRAVEL DEVICE 2-8
2.2 PERFORMANCE STANDARD AND TEST PROCEDURE 2-15
2.2.1 OPERATING SPEED 2-17
2.2.2 HYDRAULIC PRESSURE 2-18
2.2.3 SWING BEARING 2-22

Reference Only

Reference Only

2. MAINTENANCE STANDARDS TEST PROCEDURES

2.1 MAINTENANCE STANDARD

2.1.1 PIN, BUSHING, SPRING, LINING AND SHEAVE

1. Pin

Unit : mm (in.)

Location	Part number	Std. dimension	Usable limit	Remedy	See figure
(1) Pawl (Front, rear drum)		44.0 (1.732)	43.84 (1.726)	Replace	P.2-3
(2) Pawl (Boom drum)		45.0 (1.772)	44.82 (1.765)		P.2-4
(3) Brake pedal		38.1 (1.5)	37.92 (1.493)	Replace	P.2-5
(4) Brake pedal		13.0 (0.512)	12.85 (0.506)		
(5) Brake pedal		13.0 (0.512)	12.85 (0.506)		
(6) Brake pedal		10.0 (0.394)	9.96 (0.392)		
(7) Boom foot		114.7 (4.516)	114.04 (4.490)	Replace	P.2-6

2. Bushing

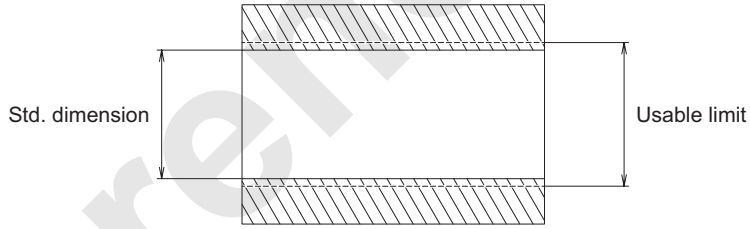

Unit : mm (in.)

Location	Part number	Std. dimension	Usable limit	Remedy	See figure
(8) Pawl (Front, rear drum)		44.0 (1.732)	44.26 (1.743)	Replace	P.2-3
(9) Pawl (Boom drum)		45.0 (1.772)	45.27 (1.782)	Replace	P.2-4
(10) Boom foot		115.0 (4.528)	115.4 (4.541)	Replace	P.2-6

Reference Only

3. Spring

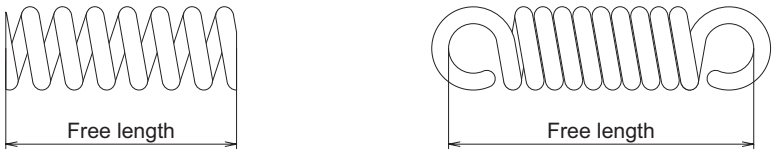

Unit : mm (in.)

Location	Part number	Std. free length	Usable limit	Remedy	See figure
(11) Pawl (Front, rear drum)		Compression : 72 (2.835)	68.4 (2.693)	Replace	P.2-3
(12) Pawl (Boom drum)		Compression : 72 (2.835)	68.4 (2.693)	Replace	P.2-4
(13) Brake pedal		Tension : 61.5 (2.421)	63.9 (2.516)	Replace	P.2-5

4. Sheave

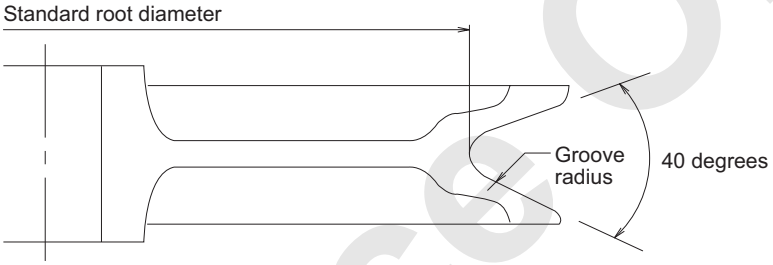

Unit : mm (in.)

Location	Part number	Std. root dia.	Use limit	Groove radius	Remedy	See figure
(14) Boom point		495.6 (19.512)	492.6 (19.394)	14.0 (0.551)	Replace or build-up	P.2-7
(15) Idler sheave						
(16) Auxiliary sheave						
(17) Upper spreader		352 (13.858)	347.2 (13.669)	10.0 (0.394)		P.2-6
(18) Lower spreader						
(19) Jib point		549 (21.614)	543.8 (21.409)	14.0 (0.551)		P.2-7
(20) Jib strut						
(21) Gantry peak		352 (13.858)	347.2 (13.669)	10.0 (0.394)		P.2-6

Reference Only

SEE FIGURE

- Front / rear drum lock assy

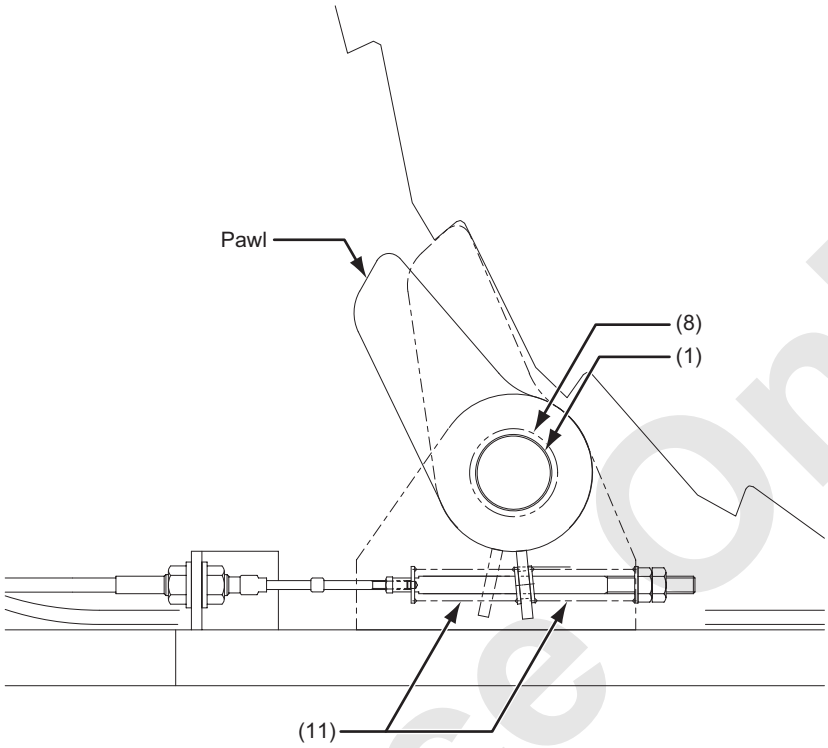

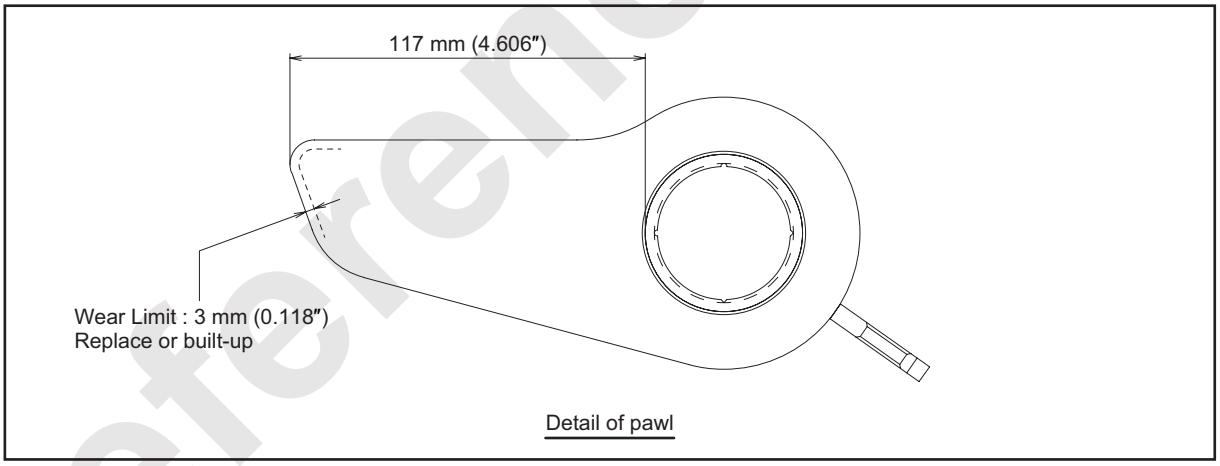

Reference Only

- Boom drum lock assy

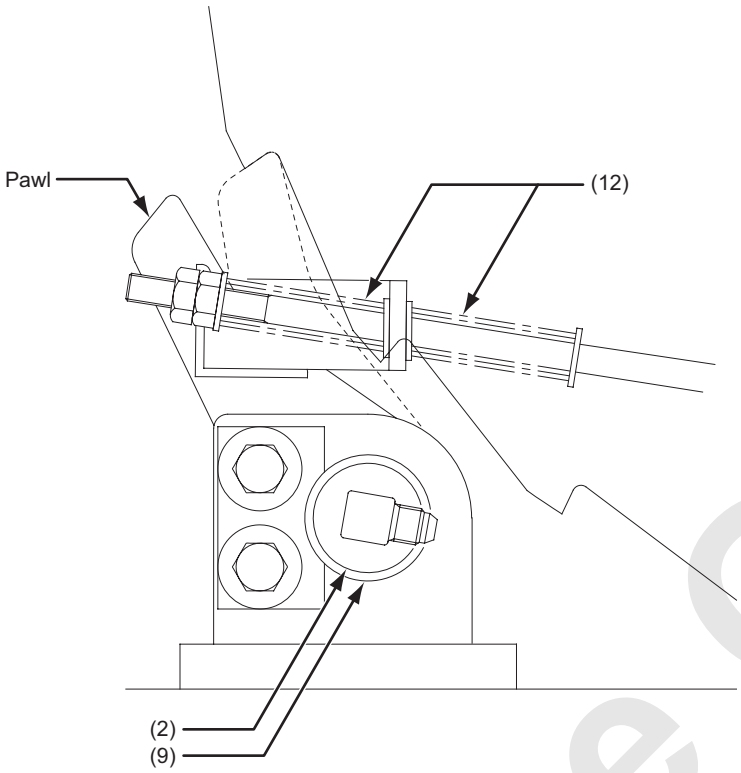

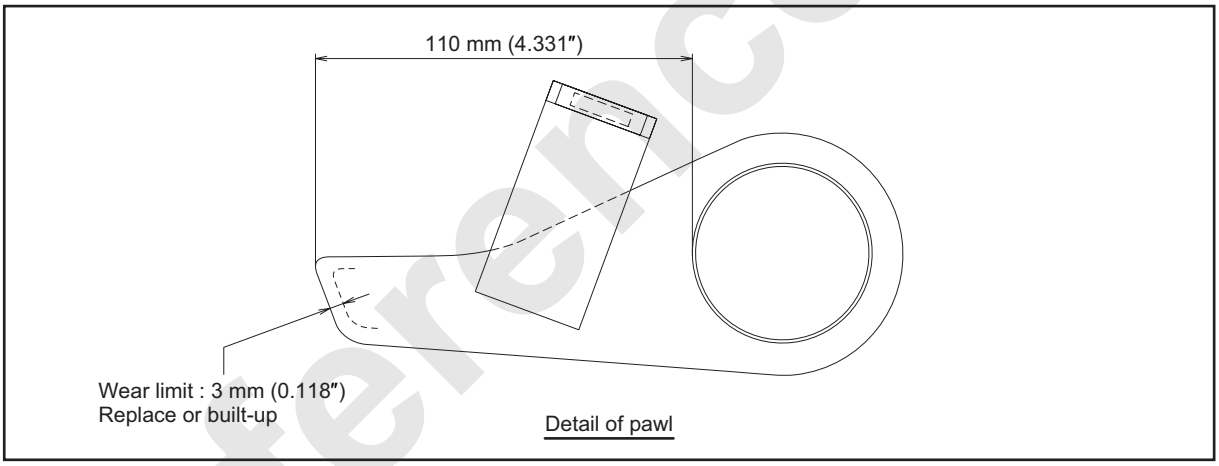

Reference Only

- Brake pedal

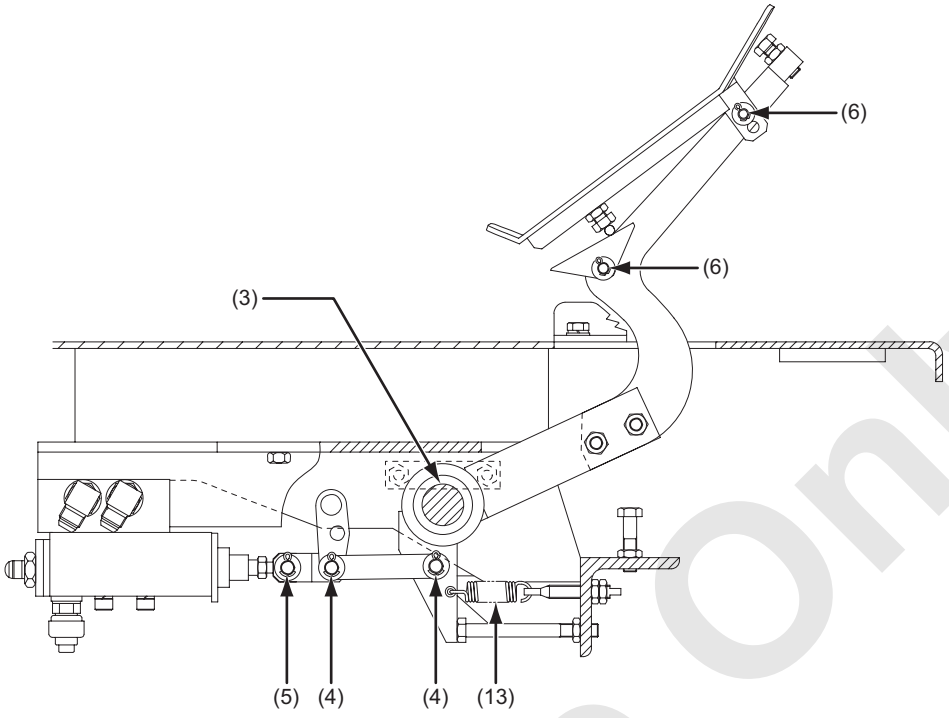

Reference Only

- Gantry assy

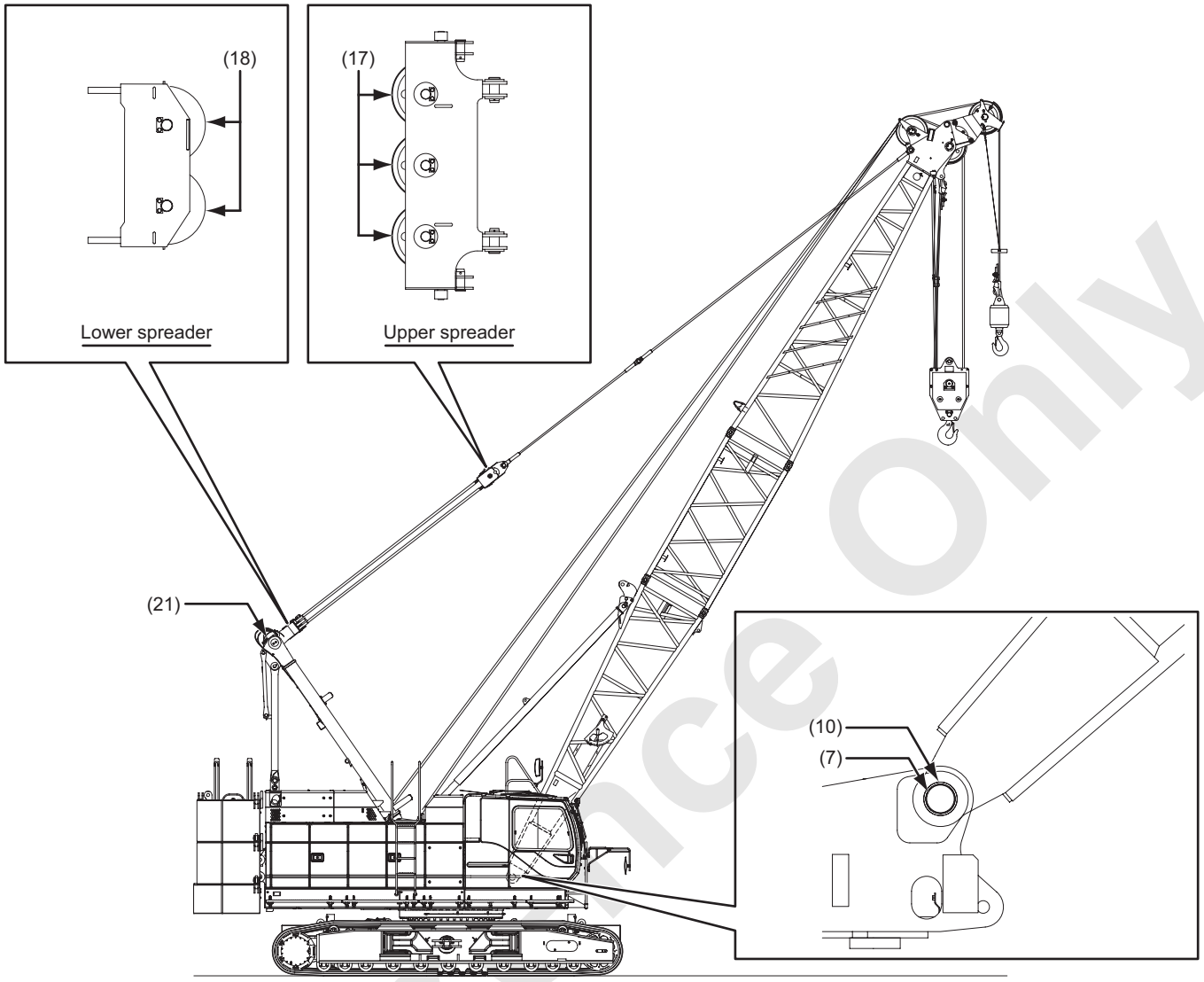

Reference Only

- Crane assy

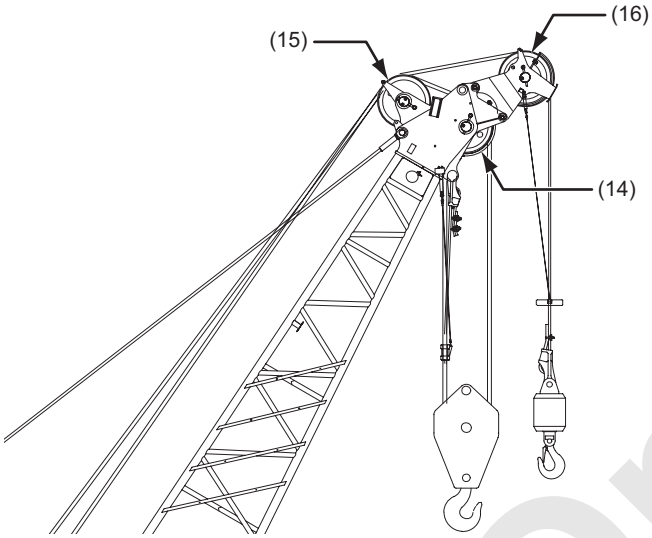

- Jib assy

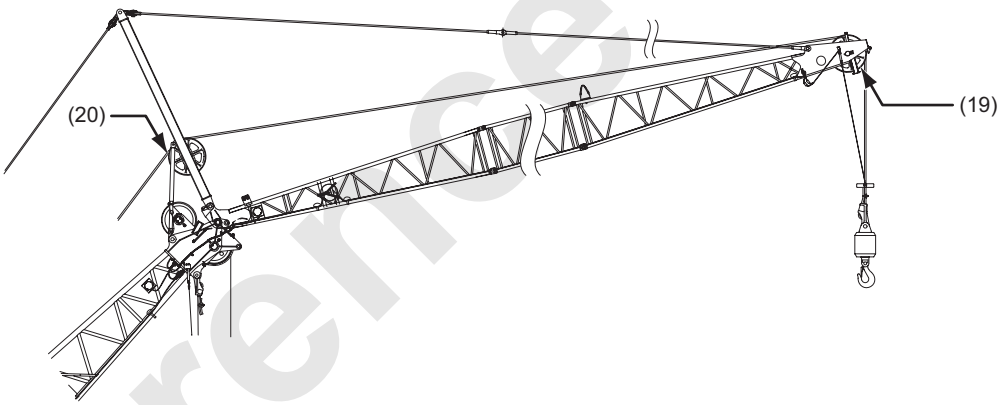

Reference Only

2.1.2 TRAVEL DEVICE

1. Crawler shoe

- 914 mm

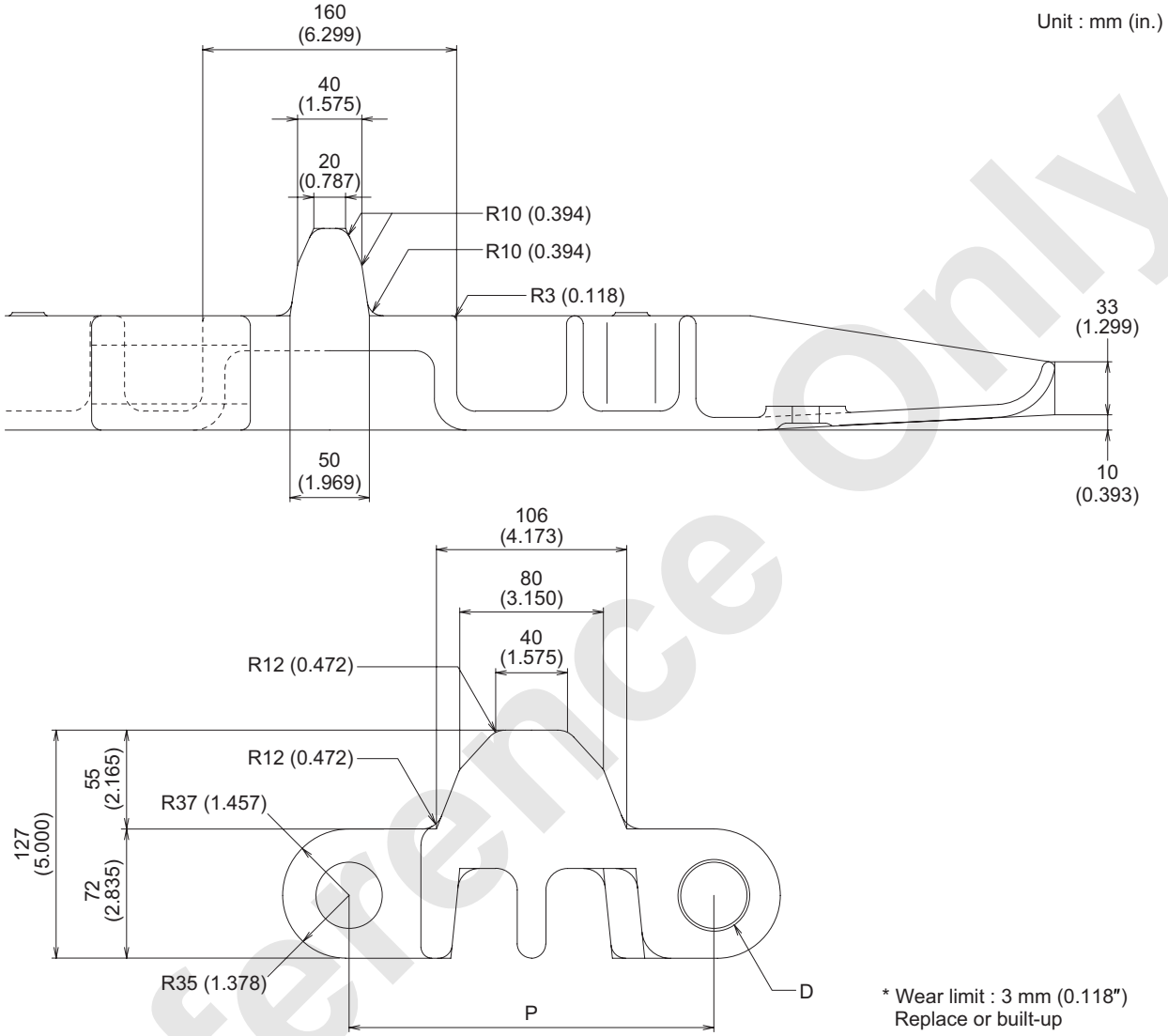

Unit : mm (in.)

Location	Std. dimension	Usable limit	Remedy
D : Pin hole	36 to 38 (1.417 to 1.496)	39.0 (1.535)	Replace or build-up
Pin	$36_{-0.2}^{0}$ (1.417)	34.0 (1.339)	
P : Pitch	203.2_{-2}^{0} (8.000)	205.0 (8.071)	

Distance between pins when 6 pcs of shoes are connected and tension applied :
1213.2 to 1225.2 mm (47.764 to 48.236 in.)

Reference Only

- 800 mm

Unit : mm (in.)

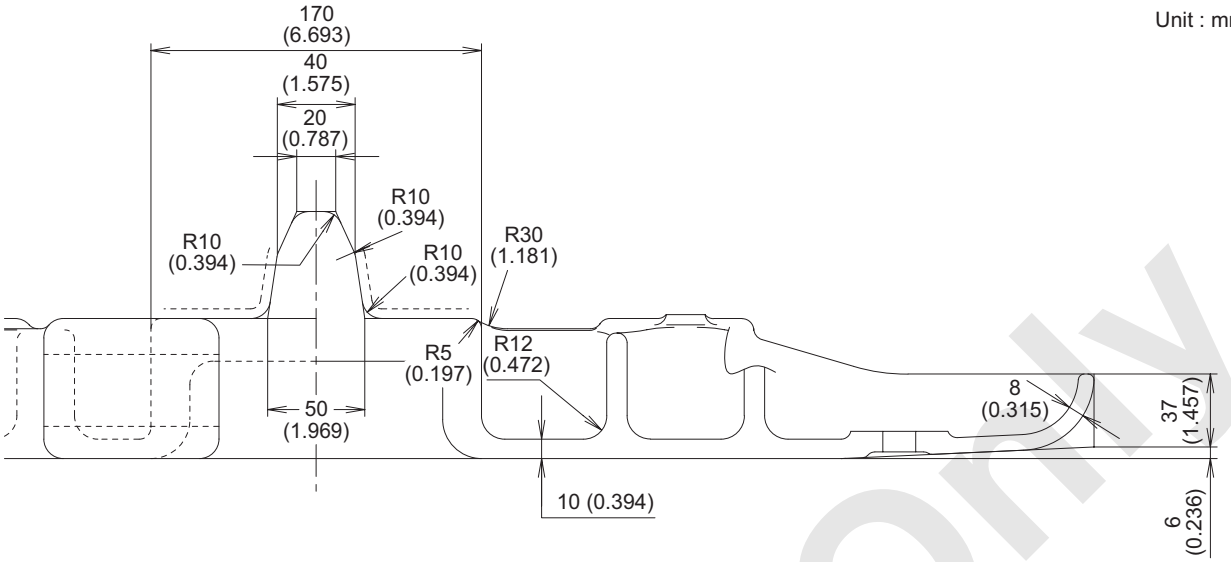

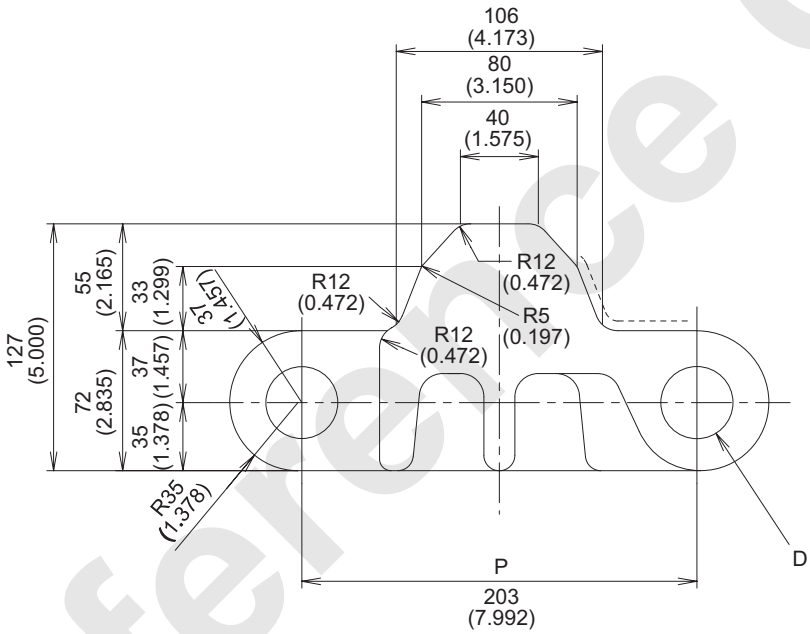

Wear limit : 2 mm (0.079″)
Remedy : Build-up or replace

Unit : mm (in.)

Location	Std. dimension	Usable limit	Remedy
D : Pin hole	36 to 38 (1.417 to 1.496)	39.0 (1.535)	Build-up or replace
Pin	$36_{-0.4}^{0}$ (1.417)	34.0 (1.339)	
P : Pitch	203.2_{-2}^{0} (8.000)	205.0 (8.071)	

Distance between pins when 6 pcs of shoes are connected and tension applied :
1213.2 to 1225.2 mm (47.764 to 48.236 in.)

Reference Only

2. Drive tumbler

Unit : mm (in.)

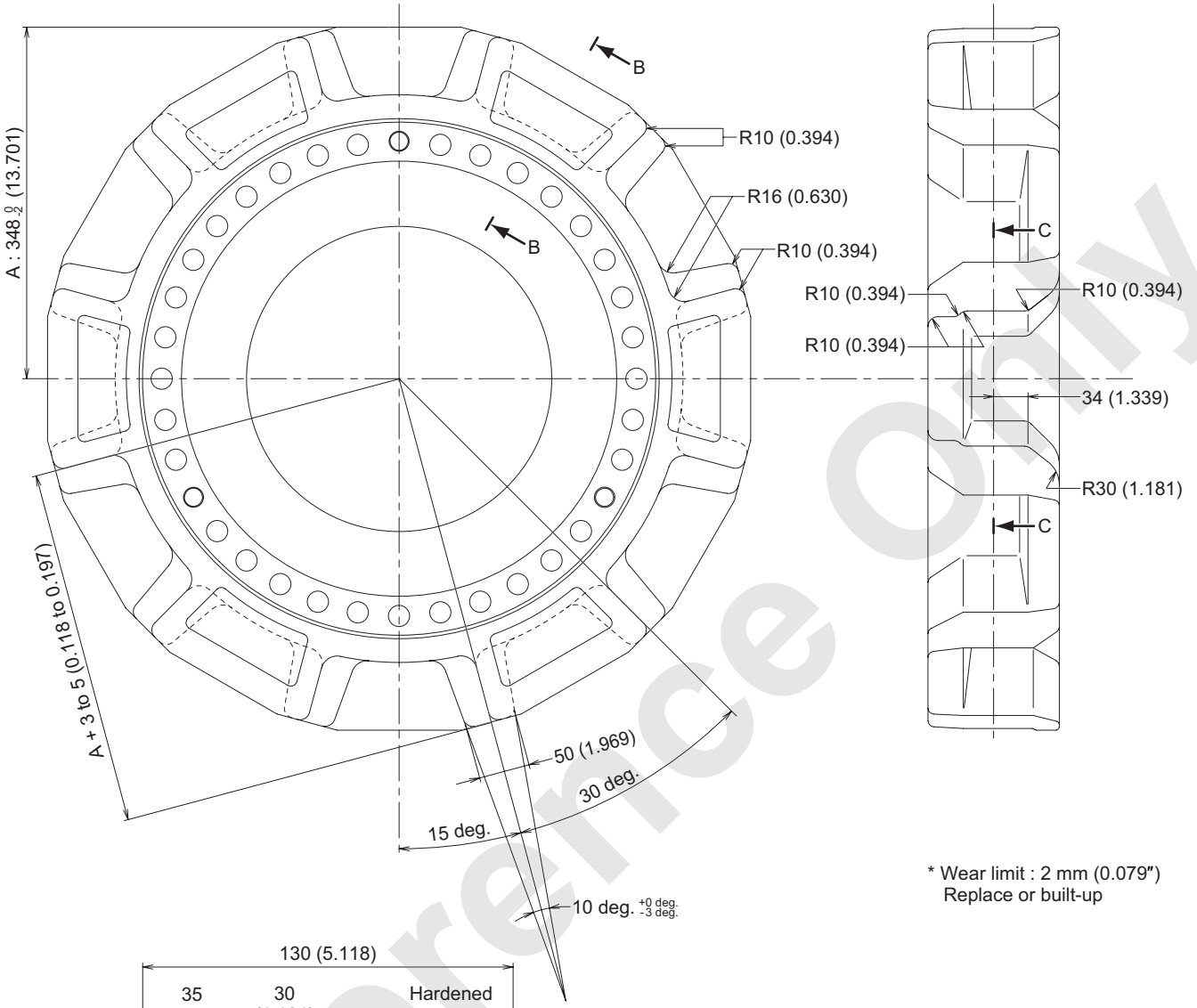

* Wear limit : 2 mm (0.079″)
Replace or built-up

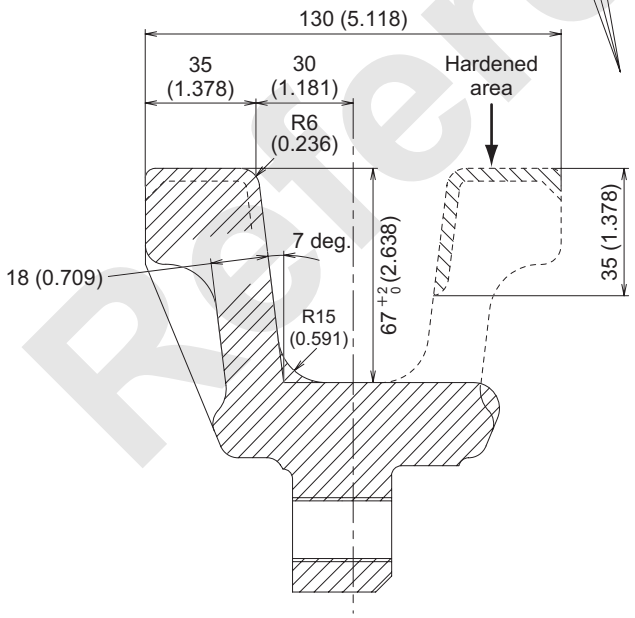

Section B-B

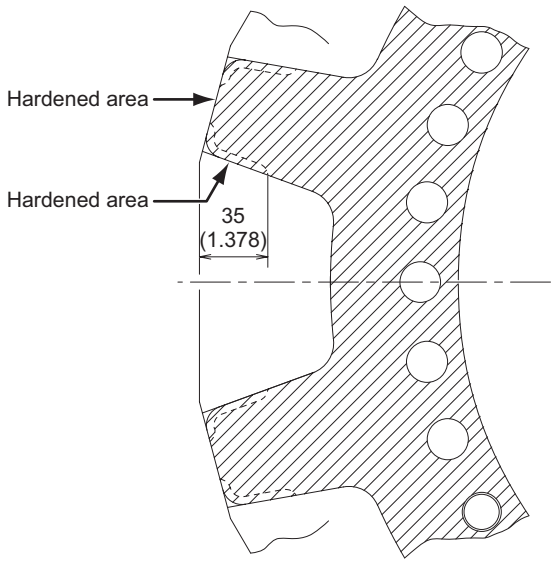

Section C-C

Reference Only

3. Idler

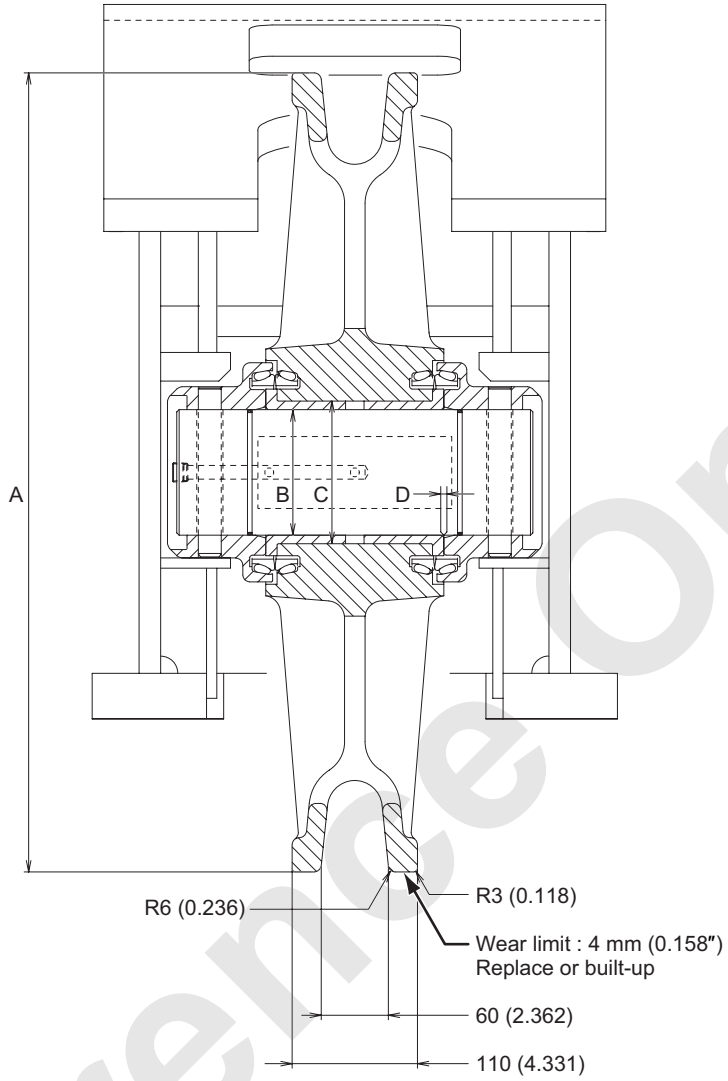

Unit : mm (in.)

Symbol	Item	Std. dimension				Usable limit	Remedy
A	Outer diameter	Φ700 (27.559)				Φ692 (27.244)	Replace or build-up
B	Gap between shaft and bushing	Std. dimension	Tolerance		Standard	Allowable	Replacement of bushing
		Φ110 (4.331)	Shaft	-0.036 (-0.001) -0.071 (-0.003)	Gap 0.175 (0.007) to 0.232 (0.009)	Gap 0.1 (0.004)	
			Bore	+0.161 (+0.006) +0.139 (+0.006)			
C	Interference of sprocket and bushing	Φ125 (4.921)	Shaft	+0.117 (+0.005) +0.092 (+0.004)	Interference 0.052 (0.002) to 0.117 (0.005)	Interference 0 (0)	
			Bore	+0.040 (+0.002) +0 (+0)			
D	Side clearance of idler (One side)	0.02 to 0.74 (0.001 to 0.029)				1.2 (0.047)	

Reference Only

4. Track roller (Lower roller)

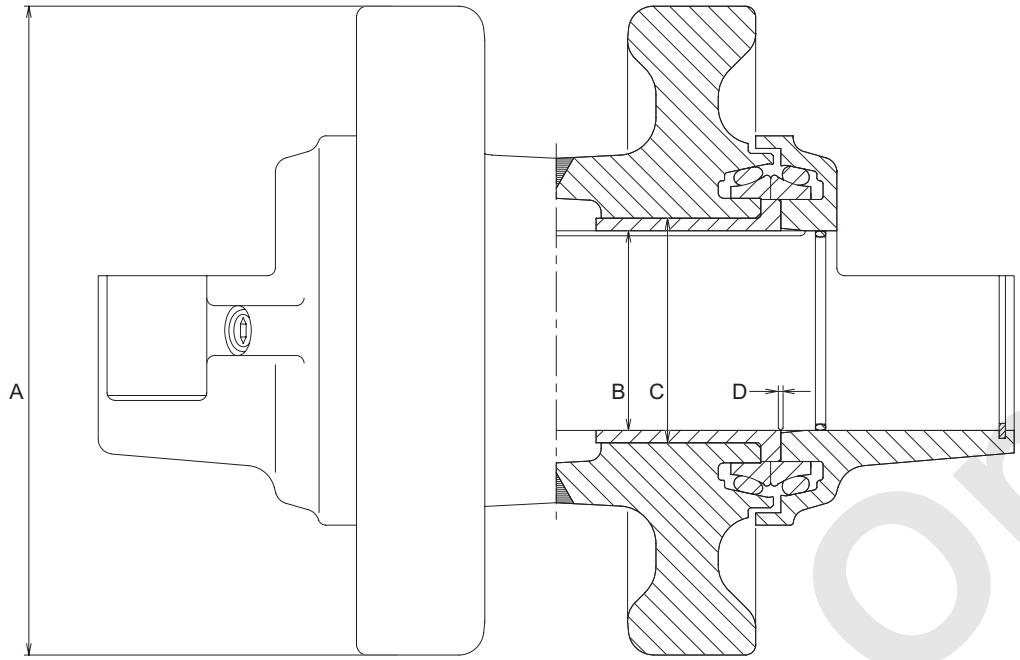

Unit : mm (in.)

Symbol	Item	Std. dimension				Usable limit	Remedy
A	Outer diameter	Φ260 (10.236)				Φ252 (9.921)	Replace or build-up
B	Gap between shaft and bushing	Std. dimension	Tolerance		standard	Allowable	Replacement of bushing
		Φ80 (3.150)	Shaft	-0.05 (-0.002) -0.08 (-0.003)	Gap 0.17 (0.007) to 0.23 (0.009)	Gap 0.8 (0.032)	
			Bore	+0.15 (+0.006) +0.12 (+0.005)			
C	Interference of roller and bushing	Φ90 (3.543)	Shaft	+0.110 (+0.004) +0.080 (+0.003)	Interference 0.045 (0.002) to 0.11 (0.004)	Interference 0 (0)	Replace
			Bore	+0.035 (+0.001) +0 (+0)			
D	Side clearance of roller (One side)	0.02 to 0.053 (0.001 to 0.047)				1.2 (0.047)	Replacement of bushing

Reference Only

5. Guide roller (Upper roller)

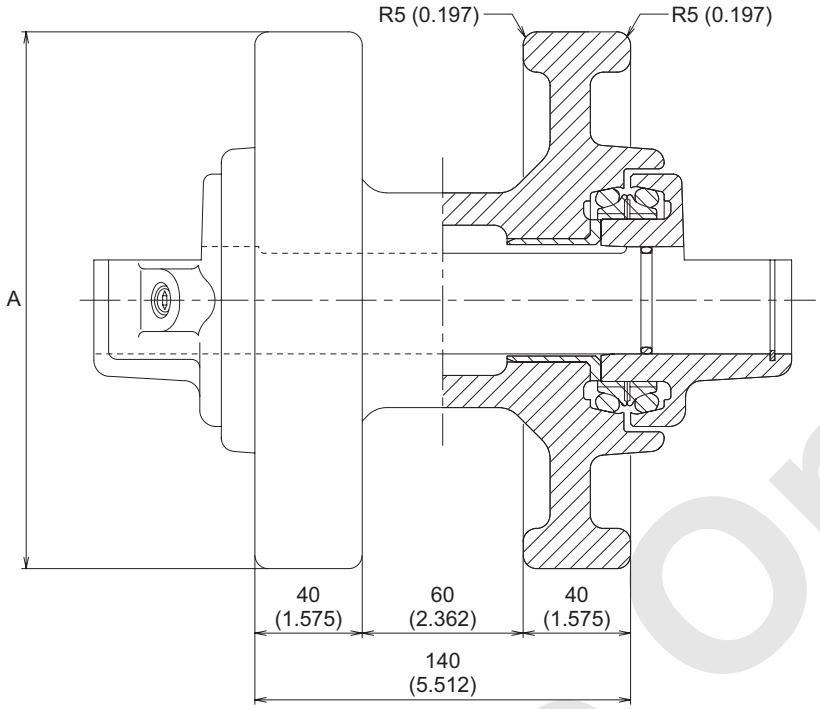

Unit : mm (in.)

Symbol	Item	Std. dimension	Usable limit	Remedy
A	Outer diameter	Φ200 (7.874)	Φ192 (7.559)	Build-up or replace

Reference Only

6. Guide bar

- Left side
- Right side

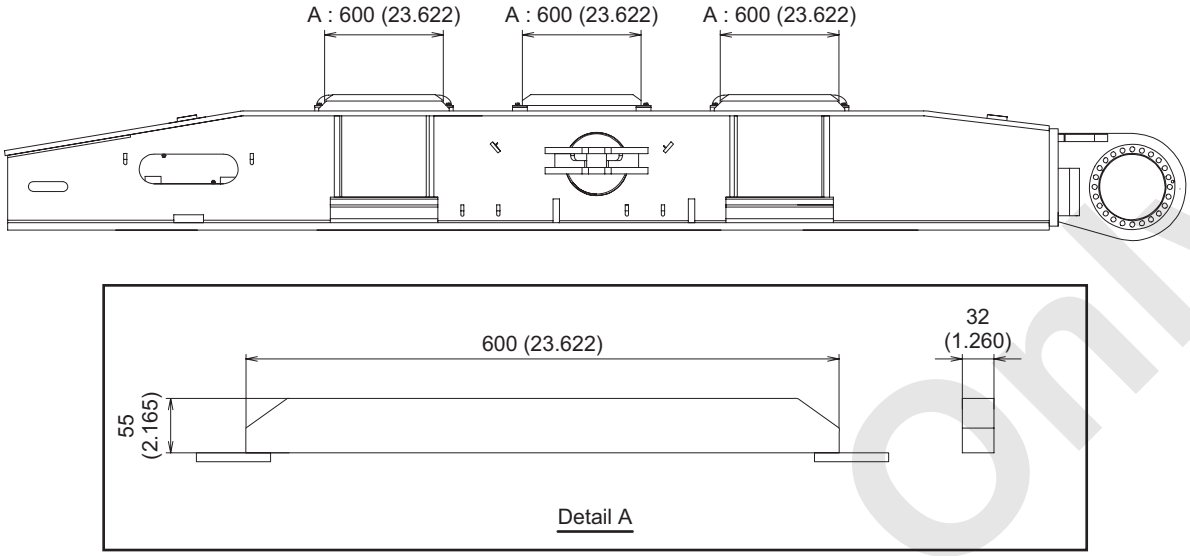

Unit : mm (in.)

Symbol	Item	Std. dimension	Usable limit	Remedy
A	Height of guide bar	55 (2.165)	30 (1.181)	Build-up or replace

Reference Only

2.2 PERFORMANCE STANDARD AND TEST PROCEDURE

1. The meaning of terminologies described in this standard is as follows.

- STANDARD VALUE
  Standard values at new machine assembly.
  However, the value without specified is shown the value for standard specification (the machine equipped with the standard attachment).

- USABLE LIMIT
  Not to use if exceeding this value.
  Repair or replace should be performed for keeping the machine performance and safety.

- TEMPERATURE OF OIL
  It is an oil temperature when performing the test which taken from the hydraulic oil tank and the oil in the circuit shall be kept the some temperature by circulate always.

2. As to the items of which limit of use is not shown, referring to standard value as the guidance, repair or replace the part as required.

3. The hydraulic hose, O-ring, oil seal and the parts made from rubber would be deteriorated, replace periodically or at the time of overhauling.

4. Especially important hoses as safety relative parts are specified as an important security parts, strongly recommended replace it periodically.

5. To perform the maintenance works, thoroughly understood the procedure; how to handle the machine, precaution and the lubrication.
   Read thoroughly the shop-manual and understood.

Reference Only

WARNING

Place a signalman to prevent an incident from caught.
Failure to observe this precaution may result in a serious injury or loss of life.

WARNING

Operate the control lever slowly.
Abrupt control lever operation is very dangerous, and may create the unexpected loads to the base machinery and the attachment or load swinging.

WARNING

Off limit signs shall be posted at surrounding area of the machine operating radius.
Failure to observe this precaution may result in a serious injury or loss of life.

WARNING

When performing the test, all unused functions should be locked.
Failure to observe this precaution may result in a serious injury or loss of life.

CAUTION

Ensure to confirm the functioning of the overload prevention device, as for the details of how to confirm, refer to "3.10.1 CHECK BEFORE ERECT THE BOOM AFTER ASSEMBLY OF THE ATTACHMENT" in OPERATION & MAINTENANCE MANUAL.

Reference Only

2.2.1 OPERATING SPEED

Item	Test condition	Test procedure	Standard value
Boom drum hoisting and lowering wire rope speed	Mode : Power mode Engine min^{-1} : High idling Temperature of oil : 45 to 55 °C (113 to 131°F) Boom Length : Basic boom Loading : No load	• Measure the time taken to rotate drum 10 times. (Start measuring after rotation becomes stable.) • Take average of 3 times measuring.	8.8 to 10.6 sec
Front and rear drum hoisting wire rope speed	Mode : Power mode Engine min^{-1} : High idling Temperature of oil : 45 to 55 °C (113 to 131°F) Loading : No load	• Measure the time taken to rotate drum 10 times. (Start measuring after rotation becomes stable.) • Take average of 3 times measuring.	Low : 17.0 to 20.0 sec (Trimmer low) High : 9.1 to 10.9 sec (Trimmer High)
Swing speed	Mode : Power mode Engine min^{-1} : High idling Temperature of oil : 45 to 55 °C (113 to 131 °F) Boom Length : Basic boom Loading : No load Swing mode : Free high	• Measure the time taken to rotate machine one time. • Measure the time for 2nd rotation after 1st preliminary rotation. • Take average of 3 times measuring.	14.1 to 16.7 sec
Travel speed	Mode : Power mode Engine min^{-1} : High idling Temperature of oil : 45 to 55 °C (113 to 131°F) Boom Length : Basic boom Place : Firm and level ground	• Measure the time taken to Travel machine the distance of 20 m (66 ft). • Travel machine first preliminary more than 2 m (6.6 ft) before starting the measuring. • Take average of 3 times measuring.	Low : 60.1 to 69.8 sec High : 40.6 to 47.3 sec
Traveling deflection	Mode : G engine mode Engine min^{-1} : High idling Temperature of oil : 45 to 55 °C (113 to 131°F) Boom Length : Basic boom Place : Firm and level ground	• Measure the deflection amount after traveling the distance of 20 m (66 ft). • Travel machine first preliminary more than 2 m (6.6 ft) before starting the measuring. • Take average of 3 times measuring.	Within 600 mm (23.6 in)

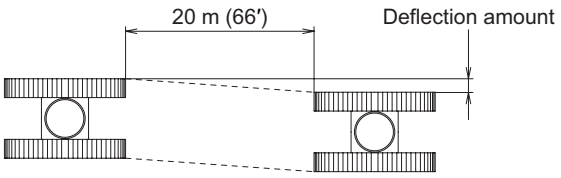

Reference Only

2.2.2 HYDRAULIC PRESSURE

Use a pressure gauge which has a surplus of more than 10 MPa for pressures to be measured and which has passed the inspection.
Prior to pressure measurement, clean the port for pressure measurement so as to be free from oil and dust.

Connector and hose for measuring pressure.

Connector	
Hose	

1. Main
   (Travel right, Boom, Rear drum 1st speed, Front drum 2nd speed)

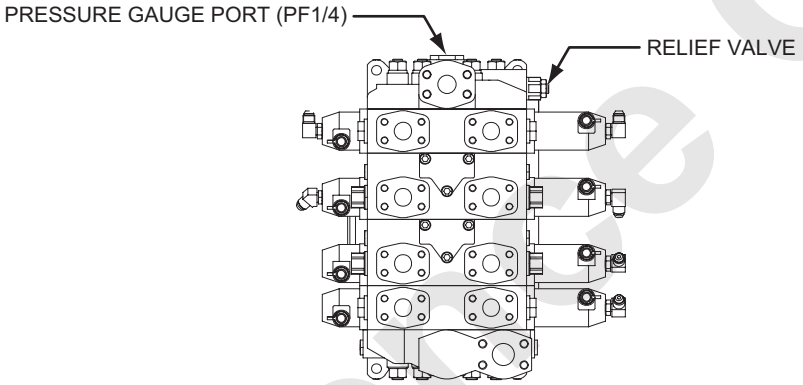

Test condition	Test procedure	Standard value
Mode : Power mode Engine speed : High idling Temperature of oil : 45 to 55 °C (113 to 131 °F)	(1) Lower the boom onto the ground. (2) Lock the boom drum with the drum lock. (3) Make the valve relieved by boom drum winch lowering operation.	31.9 MPa (4,627 psi)

Reference Only

2. Main
(Travel left, Rear drum 2nd speed, Front drum 1st speed)

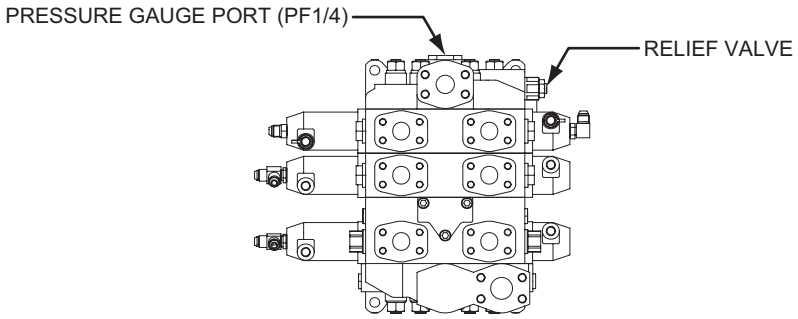

Test condition	Test procedure	Standard value
Mode : Power mode Engine speed : High idling Temperature of oil : 45 to 55 °C (113 to 131 °F)	(1) Lower the front drum hook onto the ground. (2) Lock the front winch drum with the drum lock. (3) Make the valve relieved by front drum winch lowering operation. (1st speed detent)	31.9 MPa (4,627 psi)

3. Swing

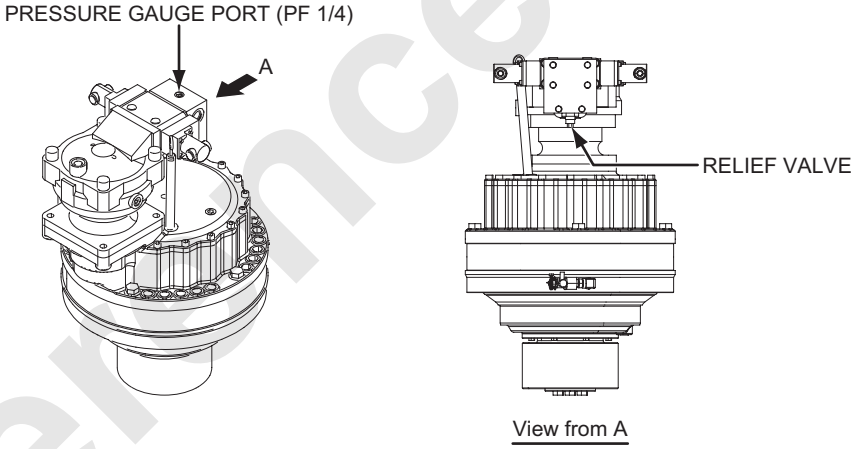

Test condition	Test procedure	Standard value
Mode : Power mode Engine speed : High idling Temperature of oil : 45 to 55 °C (113 to 131 °F) Swing mode : Free high	(1) Lock the upper with the swing lock pin and parking brake. (2) Make the valve relieved by swing operation.	27.5 MPa (3,989 psi)

Reference Only

4. Control circuit (Primary pressure)

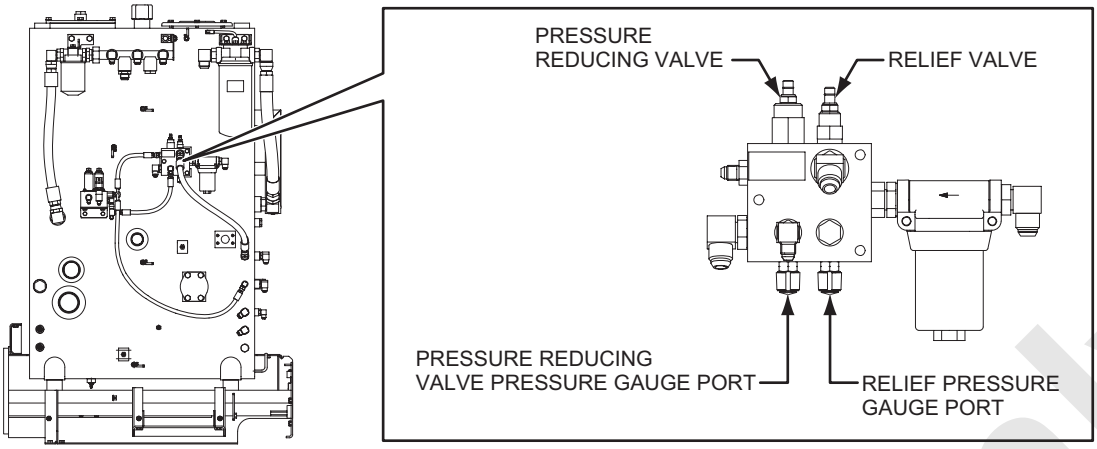

Test condition	Test procedure	Standard value
Engine speed : Low idling Temperature of oil : 45 to 55 °C (113 to 131 °F)	Remove the cap of plug installed in valve block, and instal the pressure gauge.	• Relief valve : 7.0 MPa (1,015 psi) • Reduction valve : 5.4 MPa (783 psi)

5. Control circuit (Secondary pressure)

Test condition	Test procedure	Standard value
Engine speed : Low idling Temperature of oil : 45 to 55 °C (113 to 131 °F)	Operate the control lever for the section to be measured. (Operate the speed adjusting knob to the Max. position) Take pressure out from the quick coupler of the control valve spool end.	• Front / rear drum 2.65 to 2.94 MPa (384 to 426 psi) • Travel 1.42 to 1.62 MPa (206 to 235 psi) • Swing 1.62 to 1.92 MPa (235 to 278 psi) • Third 2.65 to 2.94 MPa (384 to 426 psi) • Boom 2.50 to 2.79 MPa (363 to 405 psi)

Reference Only

6. Crawler extening

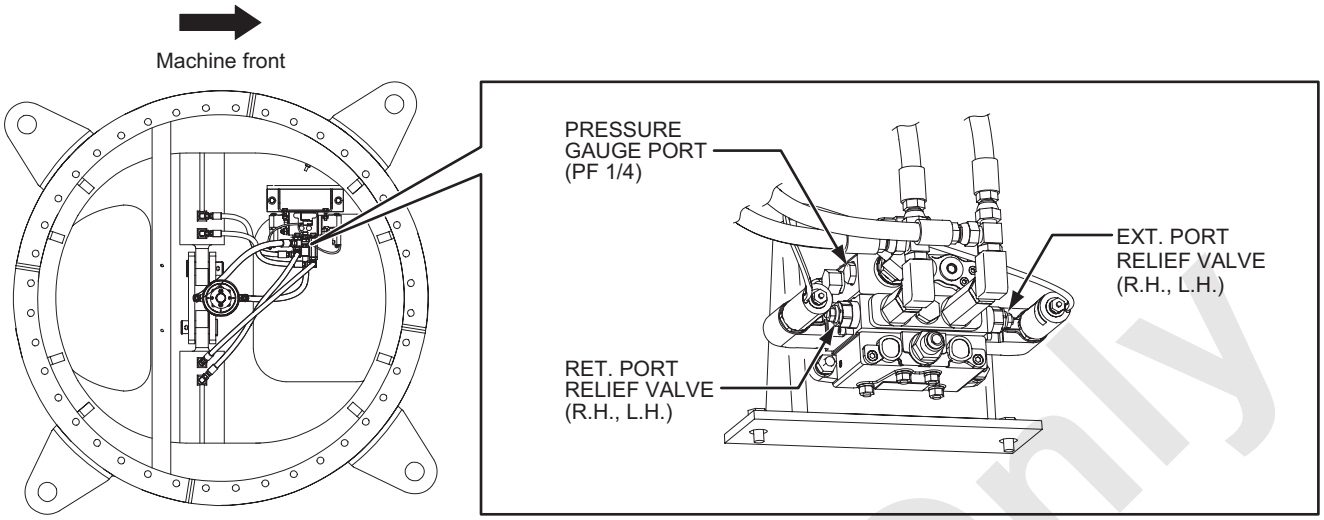

Test condition	Test procedure	Standard value
Engine speed : High idling Temperature of oil : 45 to 55 °C (113 to 131 °F)	(1) Insert the crawler fixing pins to fix the crawlers. (2) Make the valve relieved by operating crawler retraction or extension.	• Extension : 17.0 MPa (2,466 psi) • Retraction : 20.6 MPa (2,988 psi)

7. Gantry raising / lowering

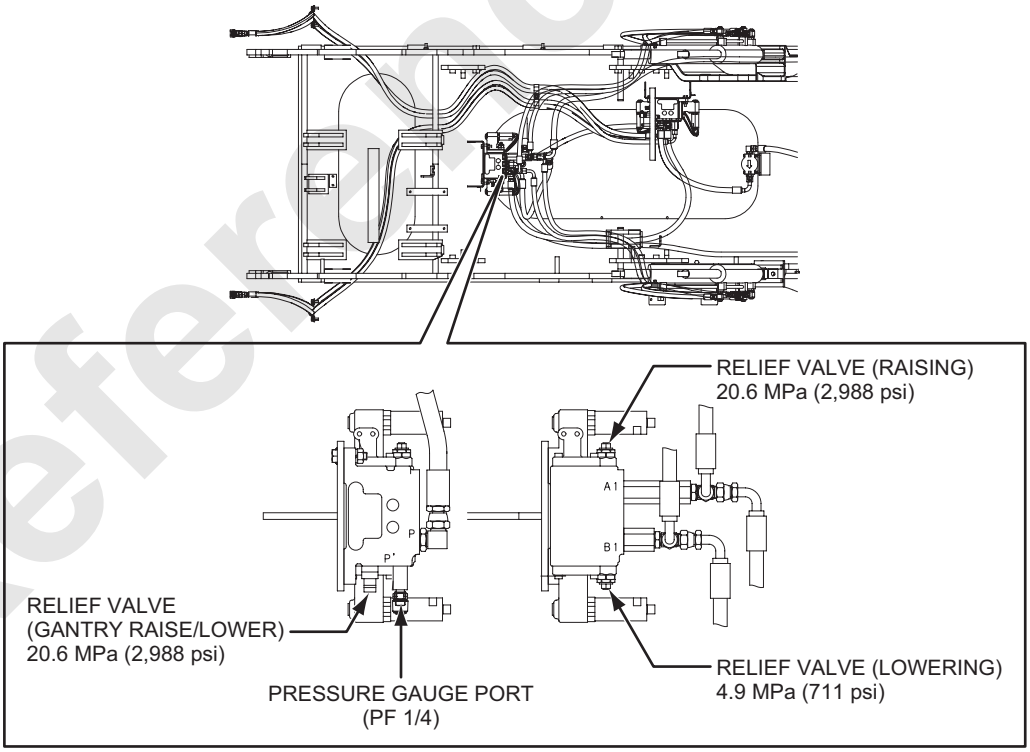

Test condition	Test procedure	Standard value
Engine speed : High idling Temperature of oil : 45 to 55 °C (113 to 131 °F)	(1) Raise the gantry high, and fix it with the gantry fixing pin. (2) Make the valve relieved by raising or lowering the gantry operation.	Port relief set • Raise : 20.6 MPa (2,988 psi) • Lower : 4.9 MPa (711 psi)

Reference Only

2.2.3 SWING BEARING

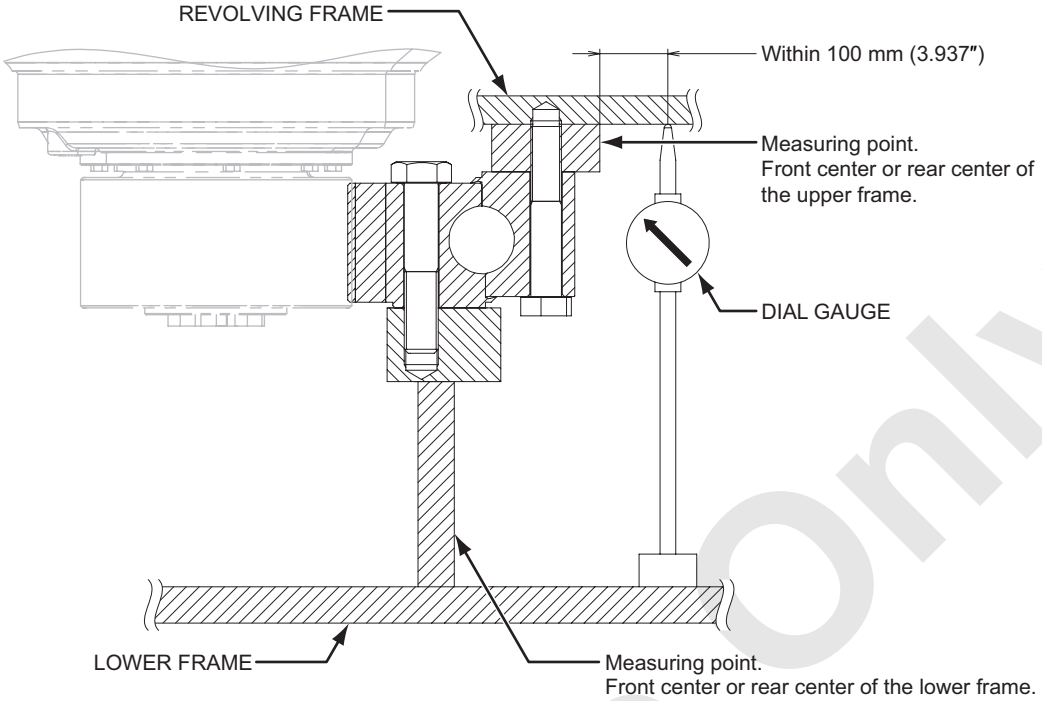

COUNTERWEIGHT : FULL

Condition of measurement	Amount of play
Boom length : 12.2 m (40 ft)	Less than 3 mm (0.118″)
Radius : 5.5 m (18 ft)	
Load : 51.4 t (113,318 lbs)	

Reference Only

3. GENERAL WORK STANDARD

3.1 STANDARD TIGHTENING TORQUE 3-1
3.1.1 TIGHTENING TORQUE OF CAP SCREWS AND NUTS 3-1
3.1.2 TIGHTENING TORQUE OF HYDRAULIC FITTINGS 3-5
3.2 STANDARD PARTS 3-7
3.2.1 BOLT 3-7
3.2.2 O-RING 3-8
3.2.3 BACK-UP RING 3-9
3.2.4 BITE TYPE FITTING 3-10
3.3 CONVERSION TABLE 3-12
3.3.1 UNIT CONVERSION 3-12
3.3.2 MILLIMETER : INCH CONVERSION TABLE 3-13
3.3.3 METER AND FOOT CONVERSION TABLE 3-15
3.3.4 GRADE CONVERSION TABLE 3-16
3.3.5 UNIT WEIGHT TABLE 3-17
3.3.6 SYSTEM INTERNATIONAL (SI) UNIT CONVERSION TABLE 3-18

Reference Only

Reference Only

3. GENERAL WORK STANDARD

3.1 STANDARD TIGHTENING TORQUE

3.1.1 TIGHTENING TORQUE OF CAP SCREWS AND NUTS

Unless otherwise specified, torque all screws and nuts on this machine to the values shown in the following tables.

1. METRIC COARSE THREADS (PLATED)

Unit : N·m (ft·lbs)

Nominal size	Classification			
	4T		7T	
	Dry	Lubricated	Dry	Lubricated
M3	0.58 to 0.72 (0.43 to 0.53)	0.40 to 0.48 (0.29 to 0.35)	1.26 to 1.54 (0.93 to 1.14)	0.86 to 1.04 (0.63 to 0.77)
M4	1.35 to 1.65 (1.00 to 1.22)	0.90 to 1.10 (0.66 to 0.81)	2.90 to 3.50 (2.14 to 2.58)	2.00 to 2.40 (1.47 to 1.77)
M5	2.60 to 3.20 (1.92 to 2.36)	1.75 to 2.15 (1.29 to 1.59)	5.70 to 6.90 (4.20 to 5.09)	3.80 to 4.60 (2.80 to 3.39)
M6	4.50 to 5.50 (3.32 to 4.06)	3.10 to 3.70 (2.29 to 2.73)	9.70 to 11.9 (7.20 to 8.80)	6.60 to 8.00 (4.90 to 5.90)
M8	10.8 to 13.2 (8.00 to 9.70)	7.30 to 8.90 (5.40 to 6.60)	23.4 to 28.6 (17.3 to 21.1)	15.8 to 19.2 (11.7 to 14.2)
M10	21.6 to 26.4 (15.9 to 19.5)	14.5 to 17.7 (10.7 to 13.1)	46.8 to 57.2 (34.5 to 42.2)	31.5 to 38.5 (23.2 to 28.4)
M12	36.9 to 45.1 (27.2 to 33.3)	24.7 to 30.3 (18.2 to 22.3)	80.1 to 97.9 (59.1 to 72.2)	54.0 to 66.0 (39.8 to 48.7)
M14	58.5 to 71.5 (43.1 to 52.7)	39.1 to 47.9 (28.8 to 35.3)	128 to 156 (94.4 to 115)	85.5 to 104.5 (63.1 to 77.1)
M16	89.1 to 108.9 (66.0 to 80.0)	59.4 to 72.6 (44.0 to 54.0)	194 to 236 (143 to 174)	129 to 157 (95.0 to 116)
M18	123 to 151 (91 to 111)	83.0 to 101 (61.0 to 75.0)	270 to 330 (199 to 243)	179 to 219 (132 to 162)
M20	173 to 211 (128 to 156)	115 to 141 (85.0 to 104)	378 to 462 (279 to 341)	252 to 308 (186 to 227)
M22	234 to 286 (173 to 211)	154 to 188 (114 to 139)	504 to 616 (372 to 454)	338 to 412 (249 to 304)
M24	297 to 363 (219 to 268)	198 to 242 (146 to 178)	648 to 792 (478 to 584)	432 to 528 (319 to 389)
M27	441 to 539 (325 to 397)	293 to 357 (216 to 263)	954 to 1,166 (704 to 860)	635 to 775 (468 to 572)
M30	599 to 731 (442 to 539)	396 to 484 (292 to 357)	1,296 to 1,584 (956 to 1,168)	864 to 1,056 (637 to 779)
M33	801 to 979 (591 to 722)	531 to 649 (392 to 479)	1,746 to 2,134 (1,288 to 1,574)	1,161 to 1,419 (856 to 1,046)
M36	1,035 to 1,265 (763 to 933)	689 to 841 (508 to 620)	2,250 to 2,750 (1,659 to 2,028)	1,494 to 1,826 (1,102 to 1,347)

Reference Only

2. METRIC FINE THREADS (PLATED)

Unit : N·m (ft·lbs)

Nominal size	Classification			
	4T		7T	
	Dry	Lubricated	Dry	Lubricated
M8	11.4 to 14.0 (8.40 to 10.3)	7.6 to 9.2 (5.60 to 6.80)	24.8 to 30.2 (18.3 to 22.3)	16.5 to 20.1 (12.2 to 14.8)
M10	22.5 to 27.5 (16.6 to 20.3)	15.0 to 18.4 (11.1 to 13.6)	48.6 to 59.4 (35.8 to 43.8)	32.9 to 40.1 (24.3 to 29.6)
M12	40.1 to 48.9 (29.6 to 36.1)	26.6 to 32.4 (19.6 to 23.9)	86.4 to 106 (63.7 to 77.9)	57.6 to 70.4 (42.5 to 51.9)
M16	94.0 to 114 (69.0 to 84.0)	62.1 to 75.9 (46.0 to 56.0)	203 to 247 (150 to 182)	135 to 165 (100 to 122)
M20	189 to 231 (139 to 170)	123 to 151 (91.0 to 111)	410 to 500 (302 to 369)	270 to 330 (199 to 243)
M24	320 to 390 (236 to 288)	212 to 258 (156 to 190)	698 to 852 (515 to 628)	459 to 561 (338 to 414)
M30	648 to 792 (478 to 584)	423 to 517 (312 to 381)	1,413 to 1,727 (1,042 to 1,274)	927 to 1,133 (684 to 836)
M36	1,089 to 1,331 (803 to 982)	716 to 874 (528 to 645)	2,367 to 2,893 (1,746 to 2,133)	1,557 to 1,903 (1,148 to 1,403)

Reference Only

3. COARSE THREADS UNC

Unit : N·m (ft·lbs)

Nominal size	Classification					
	Grade 2		Grade 5		Grade 8	
	Dry	Lubricated	Dry	Lubricated	Dry	Lubricated
1/4	7.50 to 9.10 (5.53 to 6.71)	6.40 to 7.80 (4.71 to 5.76)	11.6 to 14.2 (8.55 to 10.5)	9.90 to 12.1 (7.30 to 8.92)	16.4 to 20.0 (12.1 to 14.8)	14.0 to 17.0 (10.3 to 12.5)
5/16	14.9 to 18.1 (11.0 to 13.4)	12.5 to 15.3 (9.22 to 11.3)	23.0 to 28.0 (17.0 to 20.7)	19.3 to 23.7 (14.2 to 17.5)	32.0 to 39.0 (23.6 to 28.8)	27.5 to 33.5 (20.3 to 24.7)
3/8	25.7 to 31.3 (19.0 to 23.1)	21.2 to 25.8 (15.6 to 19.0)	39.6 to 48.4 (29.2 to 35.7)	33.8 to 41.2 (24.9 to 30.4)	55.8 to 68.2 (41.2 to 50.3)	46.8 to 57.2 (34.5 to 42.2)
7/16	39.6 to 48.4 (29.2 to 35.7)	33.8 to 41.2 (24.9 to 30.4)	62.1 to 75.9 (45.8 to 56.0)	52.2 to 63.8 (38.5 to 47.1)	87.3 to 107 (64.4 to 78.7)	72.9 to 89.1 (53.8 to 65.7)
1/2	62.1 to 75.9 (45.8 to 56.0)	52.2 to 63.8 (38.5 to 47.1)	95.0 to 117.0 (70.1 to 86.3)	80.1 to 97.9 (59.1 to 72.2)	134 to 164 (98.8 to 121)	113 to 139 (83.3 to 103)
9/16	88.2 to 108 (65.0 to 79.5)	73.8 to 90.2 (54.4 to 66.5)	137 to 167 (101 to 123)	114 to 140 (84.1 to 103)	193 to 237 (142 to 175)	162 to 198 (119 to 146)
5/8	123 to 151 (90.7 to 111)	104 to 128 (76.7 to 94.4)	193 to 237 (142 to 175)	160 to 196 (118 to 145)	275 to 335 (203 to 247)	230 to 280 (170 to 206)
3/4	221 to 269 (163 to 198)	184 to 226 (136 to 167)	338 to 412 (249 to 304)	284 to 346 (209 to 255)	477 to 583 (352 to 430)	396 to 484 (292 to 357)
7/8	212 to 258 (156 to 190)	176 to 214 (130 to 158)	540 to 660 (398 to 487)	450 to 550 (332 to 406)	756 to 924 (558 to 681)	634 to 776 (468 to 572)
1	311 to 379 (229 to 279)	266 to 324 (196 to 239)	801 to 979 (591 to 722)	671 to 819 (495 to 604)	1,134 to 1,386 (836 to 1,022)	954 to 1,166 (704 to 860)
1 1/8	450 to 550 (332 to 406)	378 to 462 (279 to 341)	1,008 to 1,232 (743 to 909)	837 to 1,023 (617 to 754)	1,620 to 1,980 (1,195 to 1,460)	1,359 to 1,661 (1,002 to 1,225)
1 1/4	625 to 765 (461 to 564)	522 to 638 (385 to 471)	1,404 to 1,716 (1,035 to 1,265)	1,170 to 1,430 (863 to 1,055)	2,268 to 2,772 (1,673 to 2,044)	1,908 to 2,332 (1,407 to 1,720)
1 3/8	819 to 1,001 (604 to 738)	689 to 841 (508 to 620)	1,845 to 2,255 (1,361 to 1,663)	1,548 to 1,892 (1,142 to 1,395)	2,979 to 3,641 (2,197 to 2,685)	2,511 to 3,069 (1,852 to 2,263)
1 1/2	1,098 to 1,342 (810 to 990)	918 to 1,122 (677 to 827)	2,448 to 2,992 (1,805 to 2,206)	2,052 to 2,508 (1,513 to 1,850)	3,960 to 4,840 (2,920 to 3,569)	3,321 to 4,059 (2,449 to 2,993)

Reference Only

4. FINE THREADS UNF

Unit : N·m (ft·lbs)

Nominal size	Classification					
	Grade 2		Grade 5		Grade 8	
	Dry	Lubricated	Dry	Lubricated	Dry	Lubricated
1/4	8.40 to 10.2 (6.19 to 7.52)	7.00 to 8.60 (5.16 to 6.34)	13.0 to 15.8 (9.59 to 11.7)	11.0 to 13.4 (8.11 to 9.88)	18.4 to 22.6 (13.6 to 16.7)	15.5 to 18.9 (11.4 to 13.9)
5/16	16.1 to 19.7 (11.9 to 14.5)	13.6 to 16.6 (10.0 to 12.2)	24.8 to 30.2 (18.3 to 22.3)	21.2 to 25.8 (15.6 to 19.0)	35.1 to 42.9 (25.9 to 31.6)	30.2 to 36.8 (22.3 to 27.1)
3/8	28.4 to 34.6 (20.9 to 25.5)	23.9 to 29.1 (17.6 to 21.5)	43.2 to 52.8 (31.9 to 38.9)	36.0 to 44.0 (26.6 to 32.5)	62.1 to 75.9 (45.8 to 56.0)	51.3 to 62.7 (37.8 to 46.2)
7/16	44.1 to 53.9 (32.5 to 39.8)	36.9 to 45.1 (27.2 to 33.3)	68.4 to 83.6 (50.4 to 61.7)	56.7 to 69.3 (41.8 to 51.1)	95.0 to 117 (70.1 to 86.3)	80.1 to 97.9 (59.1 to 72.2)
1/2	68.4 to 83.6 (50.4 to 61.7)	56.7 to 69.3 (41.8 to 51.1)	105 to 129 (77.4 to 95.1)	87.3 to 107 (64.4 to 78.7)	149 to 181 (110 to 134)	123 to 151 (90.7 to 111)
9/16	96.0 to 118 (70.8 to 87.0)	81.0 to 99.0 (59.7 to 73.0)	149 to 183 (110 to 135)	124 to 152 (91.4 to 112)	212 to 258 (156 to 190)	176 to 214 (130 to 158)
5/8	137 to 167 (101 to 123)	114 to 140 (84.0 to 103)	212 to 258 (156 to 190)	176 to 216 (130 to 159)	302 to 368 (223 to 271)	248 to 302 (183 to 223)
3/4	239 to 291 (176 to 215)	193 to 237 (142 to 175)	369 to 451 (272 to 333)	311 to 379 (229 to 280)	513 to 627 (378 to 462)	432 to 528 (319 to 389)
7/8	230 to 280 (170 to 206)	184 to 226 (136 to 167)	580 to 710 (428 to 524)	486 to 594 (358 to 438)	819 to 1,001 (604 to 738)	680 to 830 (501 to 612)
1	338 to 412 (249 to 304)	275 to 335 (203 to 247)	864 to 1,056 (637 to 779)	720 to 880 (531 to 649)	1,215 to 1,485 (896 to 1,095)	1,017 to 1,243 (750 to 917)
1 1/8	495 to 605 (365 to 446)	405 to 495 (299 to 365)	1,098 to 1,342 (810 to 990)	918 to 1,122 (677 to 827)	1,773 to 2,167 (1,308 to 1,598)	1,485 to 1,815 (1,095 to 1,339)
1 1/4	680 to 830 (501 to 612)	567 to 693 (418 to 511)	1,530 to 1,870 (1,128 to 1,379)	1,260 to 1,540 (929 to 1,136)	2,466 to 3,014 (1,819 to 2,223)	2,052 to 2,508 (1,513 to 1,850)
1 3/8	909 to 1,111 (670 to 819)	756 to 924 (558 to 681)	2,043 to 2,497 (1,507 to 1,841)	1,692 to 2,068 (1,248 to 1,525)	3,303 to 4,037 (2,436 to 2,977)	2,745 to 3,355 (2,024 to 2,474)
1 1/2	1,197 to 1,463 (883 to 1,079)	999 to 1,221 (737 to 900)	2,682 to 3,278 (1,978 to 2,417)	2,232 to 2,728 (1,646 to 2,012)	4,347 to 5,313 (3,206 to 3,918)	3,618 to 4,422 (2,668 to 3,261)

Use thread lock to prevent bolt and nut from loosening. (LOCTITE #243)
Before using thread lock wash rust, dirt and oil on thread area and dry completely.

LOCTITE #243

Reference Only

3.1.2 TIGHTENING TORQUE OF HYDRAULIC FITTINGS

Excessive or insufficient tightening of hose or tube fittings can cause oil leak and deformation or damage to the metal fittings.
Therefore, to secure and obtain good fixing and performance of fittings it is necessary to tighten to the proper torque.
The follows are the recommended torques.

BITE TYPE TUBE FITTINGS

Size : mm (inch) (Outside diameter × thickness)	Tightening torque : N·m (ft·lbs)	Remarks
10 (0.364) × 1.5 (0.059)	49 to 69 (36 to 51)	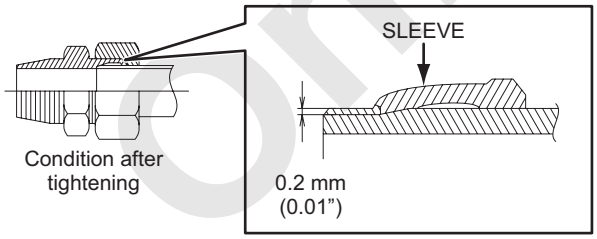
15 (0.591) × 2.0 (0.079)	127 to 157 (94 to 116)	
18 (0.709) × 2.5 (0.098)	157 to 167 (116 to 123)	
22 (0.866) × 3.0 (0.118)	196 to 216 (145 to 159)	
28 (1.102) × 4.0 (0.157)	245 to 284 (181 to 210)	
35 (1.378) × 5.0 (0.197)	324 to 353 (239 to 260)	

SPLIT FLANGES (From SAE Standard)

Size	Tightening torque : N·m (ft·lbs)		Remarks
	3,000 psi (210 kg/cm²)	6,000 psi (420 kg/cm²)	
1/2″	20 to 25 (14.5 to 19)	–	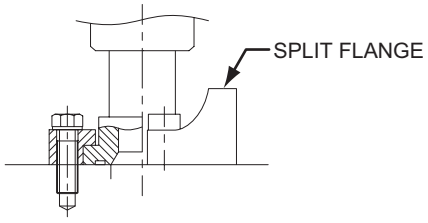
3/4″	28 to 39 (21 to 29)	34 to 45 (25 to 33)	
1″	37 to 48 (27 to 35)	56 to 68 (42 to 50)	
1 1/4″	48 to 62 (35 to 45)	84 to 101 (62 to 74)	
1 1/2″	62 to 78 (45 to 58)	158 to 180 (116 to 133)	
2″	74 to 93 (54 to 69)	271 to 294 (200 to 217)	

FLARE TYPE TUBE FITTINGS (30 degrees flare, pf threads)

Size	Tightening torque : N·m (ft·lbs)	Remarks
1/4″	25 to 34 (18 to 25)	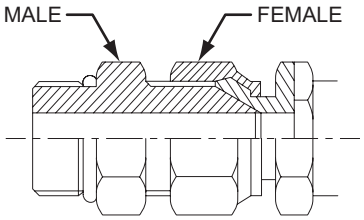
3/8″	49 to 69 (36 to 51)	
1/2″	59 to 78 (43 to 58)	
3/4″	118 to 157 (87 to 116)	
1″	147 to 186 (108 to 137)	
1 1/4″	167 to 226 (123 to 166)	
1 1/2″	216 to 275 (159 to 202)	
2″	255 to 333 (188 to 246)	

Reference Only

JUBILEE CLIP (Low pressure and suction)

Nominal cord (BS5315)	Diameter : mm (in.)	Recommended torque : N·m (ft·lbs)	Working pressure range : kg/cm^2 (psi)
12	9.5 to 12 (3/8″ to 1/2″)	3.4 (2.5)	56.0 (796)
16	11 to 16 (1/2″ to 5/8″)	3.4 (2.5)	56.0 (796)
20	13 to 20 (1/2″ to 3/4″)	3.4 (2.5)	56.0 (796)
22	16 to 22 (5/8″ to 7/8″)	4.5 (3.3)	56.0 (796)
25	18 to 25 (3/4″ to 1″)	4.5 (3.3)	56.0 (796)
30	22 to 30 (7/8″ to 1-1/8″)	4.5 (3.3)	56.0 (796)
35	25 to 35 (1″ to 1-3/8″)	4.5 (3.3)	56.0 (796)
40	27 to 40 (1-1/8″ to 1-5/8″)	4.5 (3.3)	35.0 (498)
50	35 to 50 (1-1/4″ to 1-7/8″)	4.5 (3.3)	35.0 (498)
55	40 to 55 (1-1/2″ to 2-1/8″)	5.9 (4.3)	21.0 (299)
60	45 to 60 (1-3/4″ to 2-3/8″)	5.9 (4.3)	21.0 (299)
70	55 to 70 (2″ to 2-3/4″)	5.9 (4.3)	16.8 (239)
80	60 to 80 (2-3/8″ to 3-1/8″)	5.9 (4.3)	16.8 (239)
90	70 to 90 (2-3/4″ to 3-1/2″)	6.8 (5.0)	16.8 (239)
100	85 to 100 (3-1/4″ to 4″)	6.8 (5.0)	16.8 (239)
120	90 to 120 (3 3/4″ to 4 1/2″)	6.8 (5.0)	10.5 (149)
140	110 to 140 (4-1/8″ to 5-1/2″)	6.8 (5.0)	10.5 (149)
150	130 to 150 (5″ to 5-3/4″)	6.8 (5.0)	10.5 (149)
165	135 to 165 (5-1/4″ to 6-1/2″)	6.8 (5.0)	9.8 (139)
190	160 to 190 (6-1/4″ to 7-1/2″)	6.8 (5.0)	9.8 (139)
215	185 to 215 (7-1/4″ to 8-1/2″)	7.6 (5.6)	9.0 (128)
240	205 to 240 (8-1/4″ to 9-1/2″)	7.6 (5.6)	9.0 (128)
270	235 to 270 (9-1/4″ to 10-1/2″)	7.6 (5.6)	9.0 (128)
290	255 to 290 (10-1/4″ to 11-1/2″)	7.6 (5.6)	9.0 (128)
320	285 to 320 (11-1/4″ to 12-1/2″)	7.6 (5.6)	9.0 (128)

Trade mark : an adjustable steel band secured with a screw.

Reference Only

3.2 STANDARD PARTS

3.2.1 BOLT

Size and kind of bolt can be identified as shown below.

ZS●● C●●●●●

Bolt length
(L dimension on right figure : mm)

Bolt size
(D dimension on right figure : mm)

Thread classification

Symbol	Classification
C	Coarse thread
F	Fine thread

Strength and type of the bolts

Symbol	Classification
11,16	4T
12,27	7T
13,18	10T
23	Hex. socket screw

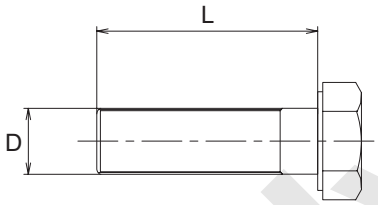

4.8 (4T)	7T	10.9 (10T)
ZS11F	ZS12F	ZS13F
ZS16F	ZS17F	ZS18F
ZS11C	ZS12C	ZS13C
ZS16C	ZS17C	ZS18C

Reference Only

3.2.2 O-RING

Size and kind of O-Ring are identified as shown below.

ZD●● P●●●00

Inner dia. of the O-ring
(d dimension on right figure : mm)

Thickness of the O-ring
(W dimension on right figure)

Symbol	Used for
P	moving portion
G	fixing portion

Rubber material classification
For practical use, these are identified as
color dot on O-ring, blue, red, green, or yellow.

Symbol	ID mark	Rubber material	Hardness	Operating temperature
11	One blue dot	Nitrile rubber	Hs70	-25 to 120 °C
12	Two blue dots	Nitrile rubber	Hs90	-25 to 120 °C
-	One red dot	Nitrile rubber	Hs70	Gasoline resistant type
-	One yellow dot	Styrol rubber	Hs70	-
-	One green dot	Fluorine rubber	Hs70	-15 to 200 °C

Reference Only

3.2.3 BACK-UP RING

Size and kind of back-up ring are identified as shown below.

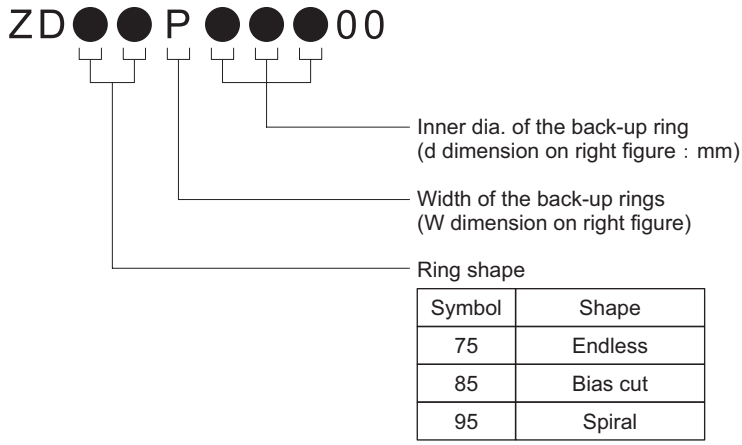

Symbol	Shape
75	Endless
85	Bias cut
95	Spiral

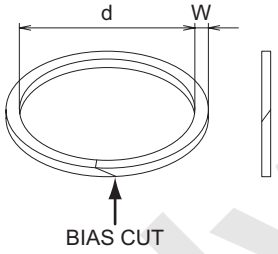

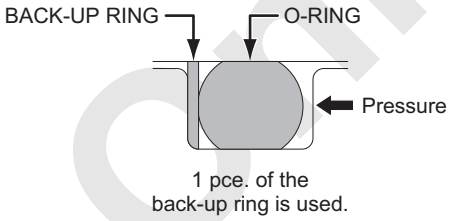

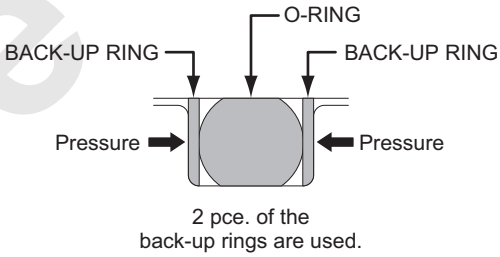

Reference Only

3.2.4 BITE TYPE FITTING

PLUG FOR TUBE

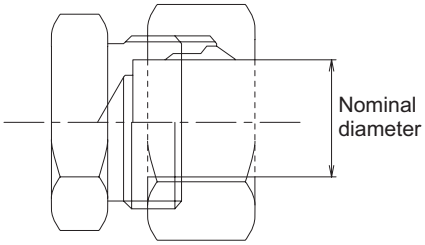

Nominal diameter : mm	Made by IHARA KOHATSU (ZF)	Made by NIHON AMC (ZA)
10		
15		
18		
22		
28		
35		

PLUG FOR CONNECTOR

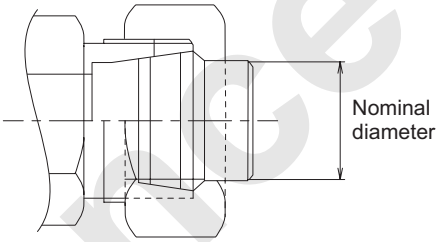

Nominal diameter : mm	Made by IHARA KOHATSU (ZF)	Made by NIHON AMC (ZA)
10		
15		
18		
22		
28		
35		

Reference Only

NUT

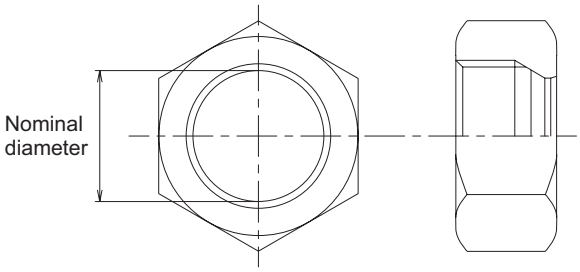

Nominal diameter : mm	Made by IHARA KOHATSU (ZF)	Made by NIHON AMC (ZA)
10		
15		
18		
22		
28		
35		

SLEEVE

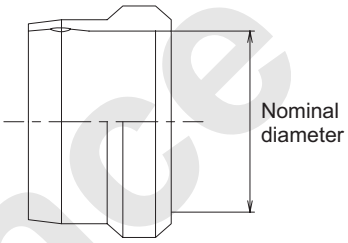

Nominal diameter : mm	Made by IHARA KOHATSU (ZF)	Made by NIHON AMC (ZA)
10		
15		
18		
22		
28		
35		

Tightening torque ZF Type

Nominal diameter : mm	10	15	18	22	28	35
Tightening torque : N·m (ft·lbs)	49 to 69 (36 to 50)	98 to 138 (73 to 101)	157 to 197 (116 to 144)	196 to 236 (146 to 174)	246 to 304 (180 to 220)	314 to 372 (233 to 273)

Tightening torque ZA Type

Nominal diameter : mm	10	15	18	22	28	35
Tightening torque : N·m (ft·lbs)	39 to 49 (28 to 36)	108 to 128 (80 to 94)	128 to 166 (94 to 122)	197 to 235 (146 to 174)	246 to 304 (180 to 220)	385 to 443 (291 to 319)

Reference Only

3.3 CONVERSION TABLE

3.3.1 UNIT CONVERSION

Figures in ( ) show number of zero down a decimal point.

Ex) 0.(2)1 = 0.001

LENGTH

Unit	mm	cm	m	km	in.	ft	yd	mile
mm	1	0.1	0.001	0.000001	0.03937	0.0032808	0.0010936	0.(6)6214
cm	10	1	0.01	0.00001	0.3937	0.032808	0.010936	0.(5)6214
m	1000	100	1	0.001	39.37	3.28083	1.0936	0.(3)6214
km	1000000	100000	1000	1	39370	3280.83	1093.61	0.62137
in.	25.4	2.540	0.0254	0.(4)254	1	0.0833	0.02778	0.(4)1578
ft	304.8	30.48	0.3048	0.(3)3048	12	1	0.3333	0.(3)1894
yd	914.4	91.44	0.9144	0.(3)9144	36	3	1	0.(3)5682
mile	1609347.0	160934.70	1609.35	1.60935	63360	5280	1760	1

VOLUME

Unit	cm^3	m^3	ltr.	kltr.	in^3	ft^3	yd^3	gal
cm^3	1	0.(5)1	0.001	0.(5)1	0.06102	0.(4)3531	0.(5)1308	0.(3)2642
m^3	1000000	1	1000	1	61020	35.31	1.308	264.2
ltr.	1000	0.001	1	0.001	61.02	0.03531	0.001308	0.2642
kltr.	1000000	1	1000	1	61020	35.31	1.308	264.2
in^3	16.39	0.(4)1639	0.01639	0.(4)1639	1	0.(3)5787	0.(4)2143	0.004329
ft^3	28320	0.02832	28.32	0.02832	1728	1	0.03704	7.48055
yd^3	764500	0.7645	764.5	0.7645	46660	27	1	201.974
gal	3785	0.003785	3.785	0.003785	231	0.1337	0.004951	1

WEIGHT

Unit	kg	oz	lb	(2000lbs) nt*1	(2240lbs) gt*2	mt*3
kg	1	35.2740	2.20462	0.001102	0.(3)9842	0.001
oz	0.02835	1	0.06250	0.(4)3125	0.(4)2790	0.(4)2835
lb	0.45359	16	1	0.00050	0.(3)4460	0.(3)4536
nt	907.185	32000	2000	1	0.89286	0.90719
gt	1016.05	35840	2240	1.12	1	1.016052
mt	1000	35274	2204.6	1.10231	0.98421	1

*1 nt : ton (U.S. unit)
*2 gt : ton (British unit)
*3 mt : ton (Metric)

Reference Only

3.3.2 MILLIMETER : INCH CONVERSION TABLE

mm → in.

1 mm to 99 mm										
mm	0	1	2	3	4	5	6	7	8	9
	in.									
0	0.0000	0.0394	0.0787	0.1181	0.1575	0.1969	0.2362	0.2756	0.3150	0.3543
10	0.3937	0.4331	0.4724	0.5118	0.5512	0.5906	0.6299	0.6693	0.7087	0.7480
20	0.7874	0.8268	0.8661	0.9055	0.9449	0.9843	1.0236	1.0630	1.1024	1.1417
30	1.1811	1.2205	1.2598	1.2992	1.3386	1.3780	1.4173	1.4567	1.4961	1.5354
40	1.5748	1.6142	1.6535	1.6929	1.7323	1.7717	1.8110	1.8504	1.8898	1.9291
50	1.9685	2.0079	2.0472	2.0866	2.1260	2.1654	2.2047	2.2441	2.2835	2.3228
60	2.3622	2.4016	2.4409	2.4803	2.5197	2.5591	2.5984	2.6378	2.6772	2.7165
70	2.7559	2.7953	2.8346	2.8740	2.9134	2.9528	2.9921	3.0315	3.0709	3.1102
80	3.1496	3.1890	3.2283	3.2677	3.3071	3.3465	3.3858	3.4252	3.4646	3.5039
90	3.5433	3.5827	3.6220	3.6614	3.7008	3.7402	3.7795	3.8189	3.8583	3.8976

25.4 mm = 1 in.

Reference Only

in. → mm

in.	0	1	2	3	4	5	6	7	8	9
	mm									
0	0.000	25.400	50.800	76.200	101.600	127.000	152.400	177.800	203.200	228.600
1/64	0.397	25.797	51.197	76.597	101.997	127.397	152.797	178.197	203.597	228.997
1/32	0.794	26.194	51.594	76.994	102.394	127.794	153.194	178.594	203.994	229.394
1/16	1.588	26.988	52.388	77.788	103.188	128.588	153.988	179.388	204.788	230.188
3/32	2.381	27.781	53.181	78.581	103.981	129.381	154.781	180.181	205.581	230.981
1/8	3.175	28.575	53.975	79.375	104.775	130.175	155.575	180.975	206.375	231.775
5/32	3.969	29.369	54.769	80.169	105.569	130.969	156.369	181.769	207.169	232.569
3/16	4.763	30.163	55.563	80.963	106.363	131.763	157.163	182.563	207.963	233.363
7/32	5.556	30.956	56.356	81.756	107.156	132.556	157.956	183.356	208.756	234.156
1/4	6.350	31.750	57.150	82.550	107.950	133.350	158.750	184.150	209.550	234.950
9/32	7.144	32.544	57.944	83.344	108.744	134.144	159.544	184.944	210.344	235.744
5/16	7.938	33.338	58.738	84.138	109.538	134.938	160.338	185.738	211.138	236.538
11/32	8.731	34.131	59.531	84.931	110.331	135.731	161.131	186.531	211.931	237.331
3/8	9.525	34.925	60.325	85.725	111.125	136.525	161.925	187.325	212.725	238.125
13/32	10.319	35.719	61.119	86.519	111.919	137.310	162.719	188.119	213.519	238.919
7/16	11.113	36.513	61.913	87.313	112.713	138.113	163.513	188.913	214.313	239.713
15/32	11.906	37.306	62.706	88.106	113.506	138.906	164.306	189.706	215.106	240.506
1/2	12.700	38.100	63.500	88.900	114.300	139.700	165.100	190.500	215.900	241.300
17/32	13.494	38.894	64.294	89.694	115.094	140.494	165.894	191.294	216.694	242.094
9/16	14.288	39.688	65.088	90.488	115.888	141.288	166.688	192.088	217.488	242.888
19/32	15.081	40.481	65.881	91.281	116.681	142.081	167.481	192.881	218.281	243.681
5/8	15.875	41.275	66.675	92.075	117.475	142.875	168.275	193.675	219.075	244.475
21/32	16.669	42.069	67.469	92.869	118.269	143.669	169.069	194.469	219.869	245.269
11/16	17.463	42.863	68.263	93.663	119.063	144.463	169.863	195.263	220.663	246.063
23/32	18.256	43.656	69.056	94.456	119.856	145.256	170.656	196.056	221.456	246.856
3/4	19.050	44.450	69.850	95.250	120.650	146.050	171.450	196.850	222.250	247.650
25/32	19.844	45.244	70.644	96.044	121.444	146.844	172.244	197.644	223.044	248.444
13/16	20.638	46.038	71.438	96.838	122.238	147.638	173.038	198.438	223.838	249.238
27/32	21.431	46.831	72.231	97.631	123.031	148.431	173.831	199.231	224.631	250.031
7/8	22.225	47.625	73.025	98.425	123.825	149.225	174.625	200.025	225.425	250.825
29/32	23.019	48.419	73.819	99.219	124.619	150.019	175.419	200.819	226.219	251.619
15/16	23.813	49.213	74.613	100.013	125.413	150.813	176.213	201.613	227.013	252.413
31/32	24.606	50.006	75.406	100.806	126.206	151.606	177.006	202.406	227.806	253.206

Reference Only

3.3.3 METER AND FOOT CONVERSION TABLE

Foot	Meter	Foot	Meter	Foot	Meter
5	1.52	175	53.34	345	105.12
10	3.05	180	54.86	350	106.68
15	4.57	185	56.39	355	108.20
20	6.10	190	57.91	360	109.73
25	7.62	195	59.44	365	111.25
30	9.14	200	60.96	370	112.78
35	10.67	205	62.48	375	114.30
40	12.19	210	64.01	380	115.82
45	13.72	215	65.53	385	117.35
50	15.24	220	67.06	390	118.87
55	16.76	225	68.58	395	120.40
60	18.29	230	70.10	400	121.92
65	19.81	235	71.63	405	123.44
70	21.34	240	73.15	410	124.97
75	22.86	245	74.68	415	126.49
80	24.38	250	76.20	420	128.02
85	25.91	255	77.72	425	129.54
90	27.43	260	79.25	430	131.06
95	28.96	265	80.77	435	132.59
100	30.48	270	82.30	440	134.11
105	32.00	275	83.82	445	135.64
110	33.53	280	85.34	450	137.16
115	35.05	285	86.87	455	138.68
120	36.58	290	88.39	460	140.21
125	38.10	295	89.92	465	141.73
130	39.62	300	91.44	470	143.26
135	41.15	305	92.96	475	144.78
140	42.67	310	94.49	480	146.30
145	44.20	315	96.01	485	147.83
150	45.72	320	97.54	490	149.35
155	47.24	325	99.06	495	150.88
160	48.77	330	100.58	500	152.40
165	50.29	335	102.11		
170	51.82	340	103.63		

1 foot = 0.3048 meter

Reference Only

3.3.4 GRADE CONVERSION TABLE

Degrees.	% (tan θ)	Degrees.	% (tan θ)	Degrees.	% (tan θ)
1	1.8	16	28.7	31	60.1
2	3.5	17	30.6	32	62.5
3	5.2	18	32.5	33	64.9
4	7.0	19	34.4	34	67.5
5	8.8	20	36.4	35	70.0
6	10.5	21	38.4	36	72.7
7	12.3	22	40.4	37	75.4
8	14.1	23	42.5	38	78.1
9	15.8	24	44.5	39	81.0
10	17.6	25	46.6	40	83.9
11	19.4	26	48.8	41	86.9
12	21.3	27	51.0	42	90.0
13	23.1	28	53.2	43	93.3
14	24.9	29	55.4	44	96.6
15	26.8	30	57.7	45	100.0

Reference Only

3.3.5 UNIT WEIGHT TABLE

Material	Weight per Cub. Meter (t)
Lead	11.4
Copper	8.9
Steel	7.8
Cast iron	7.2
Aluminum	2.7
Concrete	2.3
Soil	2.0
Gravel	1.9

Material	Weight per Cub. Meter (t)
Sand	1.9
Coal cold	0.8
Coal powder	1.0
Coke	0.5
Oak	0.9
Cedar	0.4
Cypress	0.4
Paulownia	0.3

Note

Weight of wood is that of the dried.
Value shown in the table may well be taken for specific gravity.

Reference Only

3.3.6 SYSTEM INTERNATIONAL (SI) UNIT CONVERSION TABLE

International System of Units (SI : System International Unit)			Conversion Formula CGS unit system to SI unit system
Types	Unit symbols	Meaning	
Mass	kg	Kilogram	Mass (kg) = Weight (kgf)*1
Force (Load)	N kN	Newton Kilonewton	1 (N) = 1 (kg) × 9.80 1 (kN) = 1 (N) × 1000
Moment of force	N·m	–	1 (N·m) = 1 (N) × 1 (m)
Stress	N/mm^2	–	1 (N/mm^2) =1 (N) ÷ 1 (mm^2)
Pressure (hydraulic pressure, pneumatic pressure) ground pressure	Pa kPa MPa	Pascal Kilopascal Megapascal	1 (Pa) = 1 (N/mm^2) 1 (kPa) = 1 (Pa) × 1000 1 (MPa) = 1 (kPa) × 1000
Horsepower (Motive power)	kW	Kilowatt	1 (kW) = 1 (PS)*2 ÷ 0.7355
Energy	J	Joule	1 (J) = 1 (N·m)

*1 f = gravity

*2 PS = horsepower

Gravimetric unit	— × → ← ÷ —	SI unit
kgf	9.807	N
lbf	4.448	N
kgf-cm	0.0981	N·m
lbf-ft	1.356	N·m
lbt-in	0.113	N·m
kgf/cm^3	0.0981	MPa
atm	0.1013	MPa
lbf/in^2	0.0069	MPa
kgf/cm^3	98.1	kPa
atm	101.3	kPa
lbt/in^2	6.9	kPa
mm Hg	133.3	Pa
in Hg	3386	Pa

Gravimetric unit	— × → ← ÷ —	SI unit
kgf-m/s	0.00981	kW
lbf-ft/s	0.00136	kW
PS	0.7355	kW
HP	0.746	kW
kgf-m	9.807	J
kcal	4186	J
$kgf-s/cm^3$	98067	Pa-s
cP	0.001	Pa-s
P	0.1	Pa-s
cSt	1×10^{-6}	m^2/s
cSt	1	mm^2/s
St	0.0001	m^2/s
atm-cc/s	0.1013	$Pa-m^3/s$

Reference Only

4. POWER TRAIN

4.1 APPARATUS AND COMPONENTS LOCATION 4-3
4.2 ENGINE 4-6
4.2.1 REMOVAL OF THE ENGINE 4-6
4.2.2 REPAIR AND MAINTENANCE OF THE ENGINE 4-9
4.2.3 INSTALLATION OF THE ENGINE 4-10
4.3 PUMP DRIVE ASSEMBLY 4-14
4.3.1 CONSTRUCTION OF THE POWER DIVIDER 4-15
4.3.2 CONSTRUCTION OF THE COUPLING 4-20
4.3.3 REMOVAL OF EACH PUMP 4-21
4.3.4 REMOVAL OF THE POWER DIVIDER 4-22
4.3.5 REMOVAL OF THE COUPLING 4-23
4.3.6 DISASSEMBLING THE POWER DIVIDER 4-24
4.3.7 CHECK AND REPAIR OF THE POWER DIVIDER 4-26
4.3.8 ASSEMBLING THE POWER DIVIDER 4-27
4.3.9 INSTALLATION OF THE COUPLING 4-28
4.3.10 INSTALLATION OF EACH PUMP 4-29
4.4 ASSEMBLY AND DISASSEMBLY OF RADIATOR 4-30
4.4.1 CONSTRUCTION OF THE RADIATOR 4-30
4.4.2 REPLACEMENT ORDER OF RADIATOR CORE 4-31
4.5 DEF/AdBlue® SCR SYSTEM 4-32
4.5.1 DEF/AdBlue® TANK 4-37
4.5.2 INDUCEMENT CONTROL SYSTEM 4-40

Reference Only

Reference Only

4. POWER TRAIN

This crane is a full hydraulic crawler crane.
The engine drives following pumps via the power divider.

MAIN PUMP

This pump is a tandem type variable displacement pump mounted on the power divider and provides a power to left and right travel motors, boom hoist motor, each of front and rear hoist motor through the two control valves.
Furthermore, by adding an exclusive control valve it provides power to the third (option) hoist motor.

- Front and rear hoist motors
  Drives drum shafts through respective reduction unit and hoisting, lowering or stop the respective hoist drums through the drum built in clutch.

- Boom hoist motor
  Drives drum shafts through reduction unit and hoisting, lowering or stop the boom hoist drum.

- Left and right travel motor
  Drives drive tumblers through respective reduction units to travel the machine.

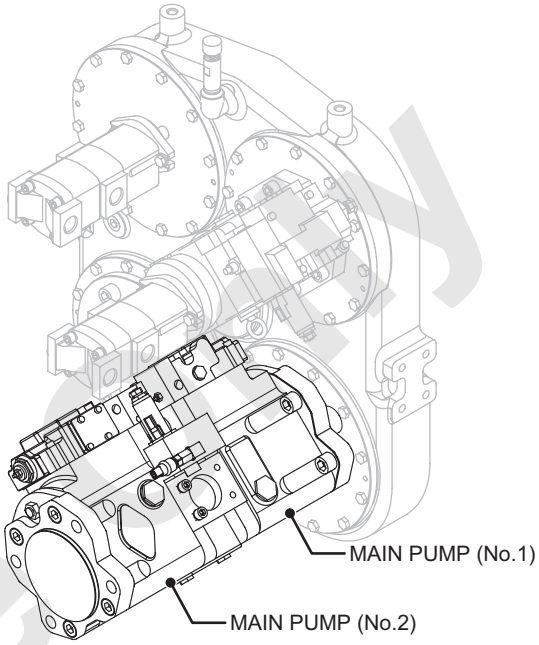

SWING PUMP

This pump is a plunger pump mounted on the power divider and provides the power to swing motor through the reduction unit to swing the upper machinery.

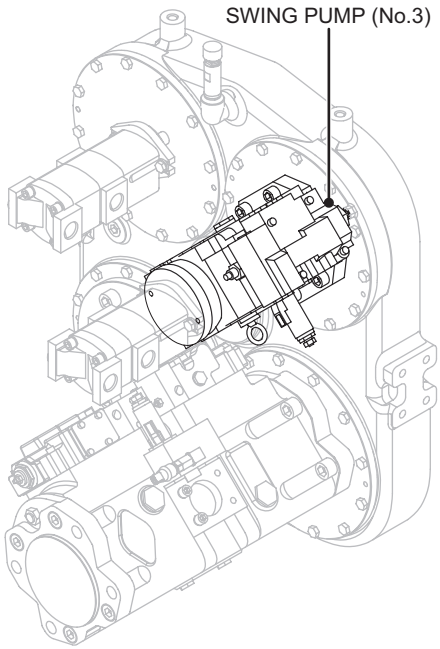

Reference only

GEAR PUMP

This pump is the tandem type gear pump mounted on the power divider.
Gear pump sends hydraulic oil to free fall cooling circuit of the front/rear hoist drum.

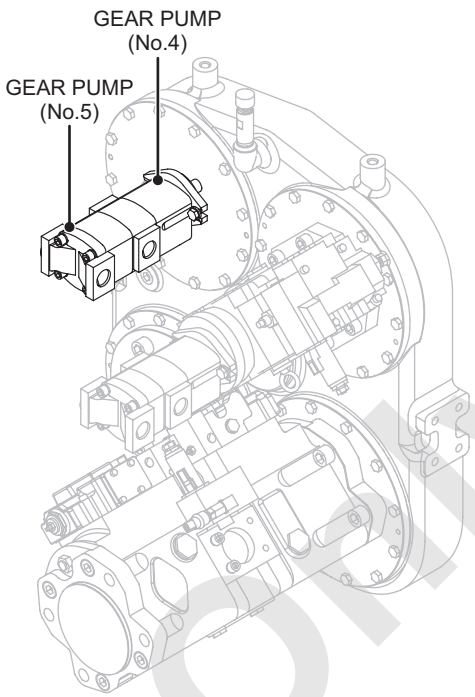

GEAR PUMP

This pump is the tandem type gear pump mounted on the swing pump.
No.6 pump sends hydraulic oil to control circuit.
No.7 pump sends hydraulic oil to gantry raising cylinder, crawler extend/retract cylinder and tagline (option) circuit.

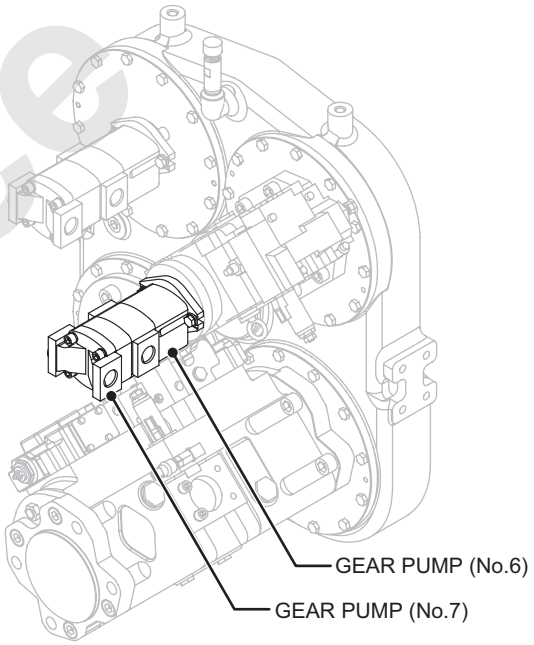

Reference Only

4.1 APPARATUS AND COMPONENTS LOCATION

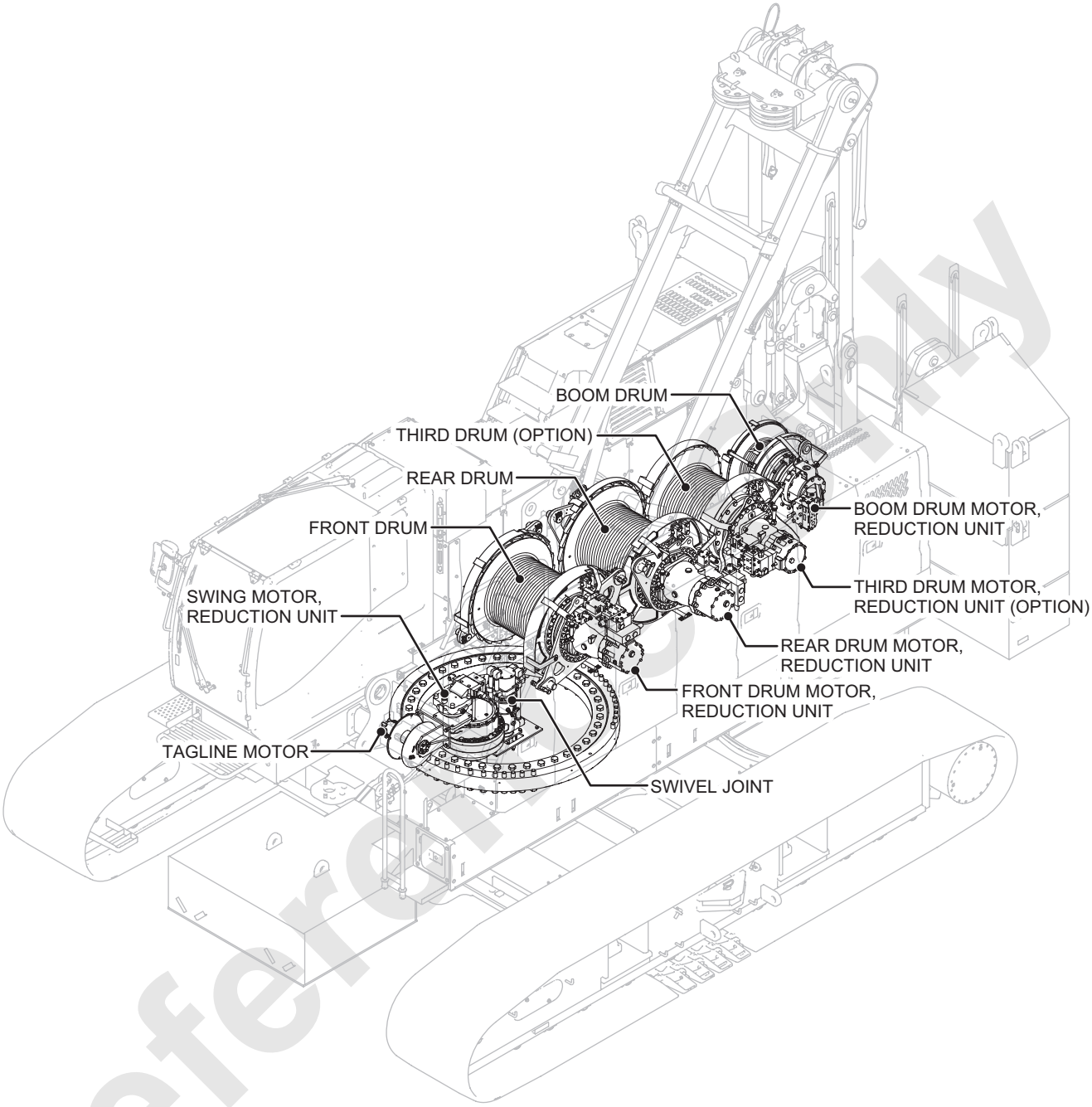

Reference Only

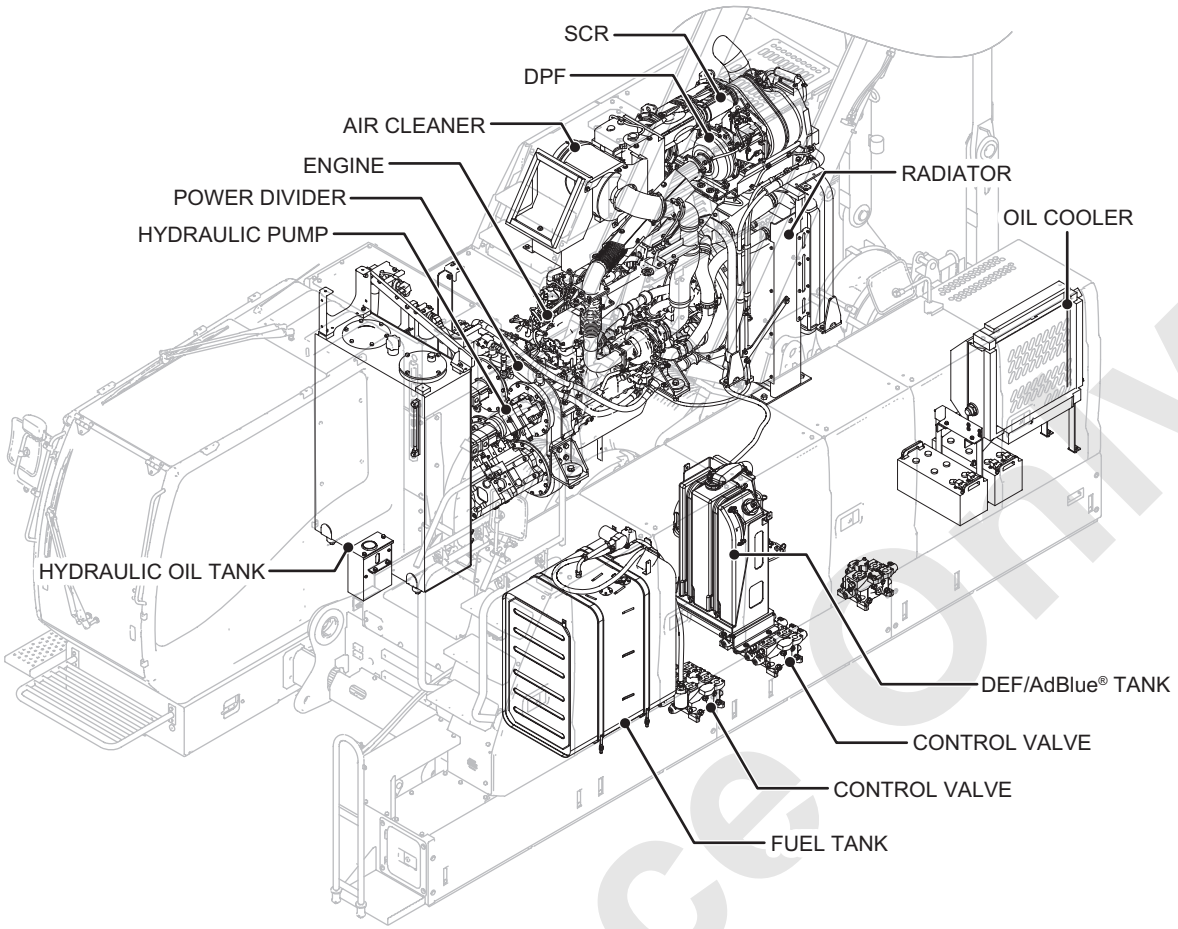

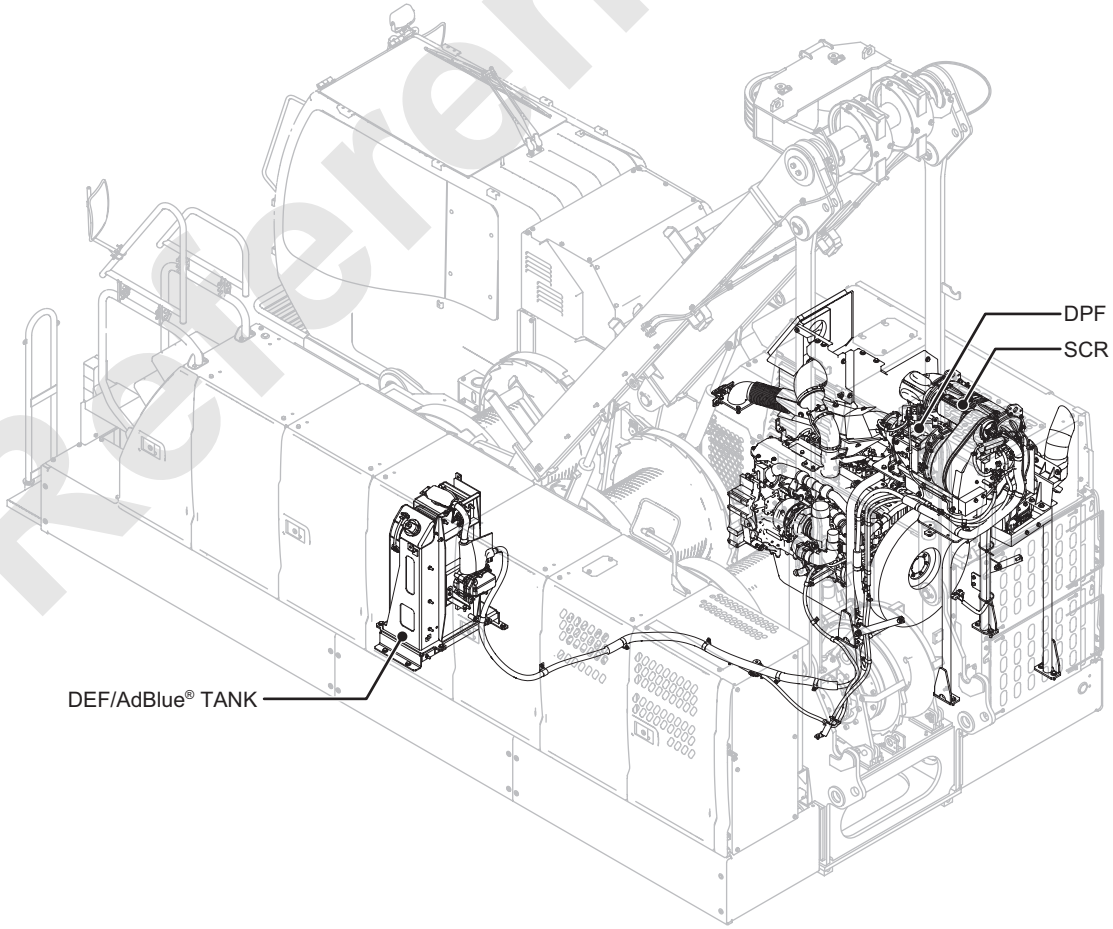

Reference Only

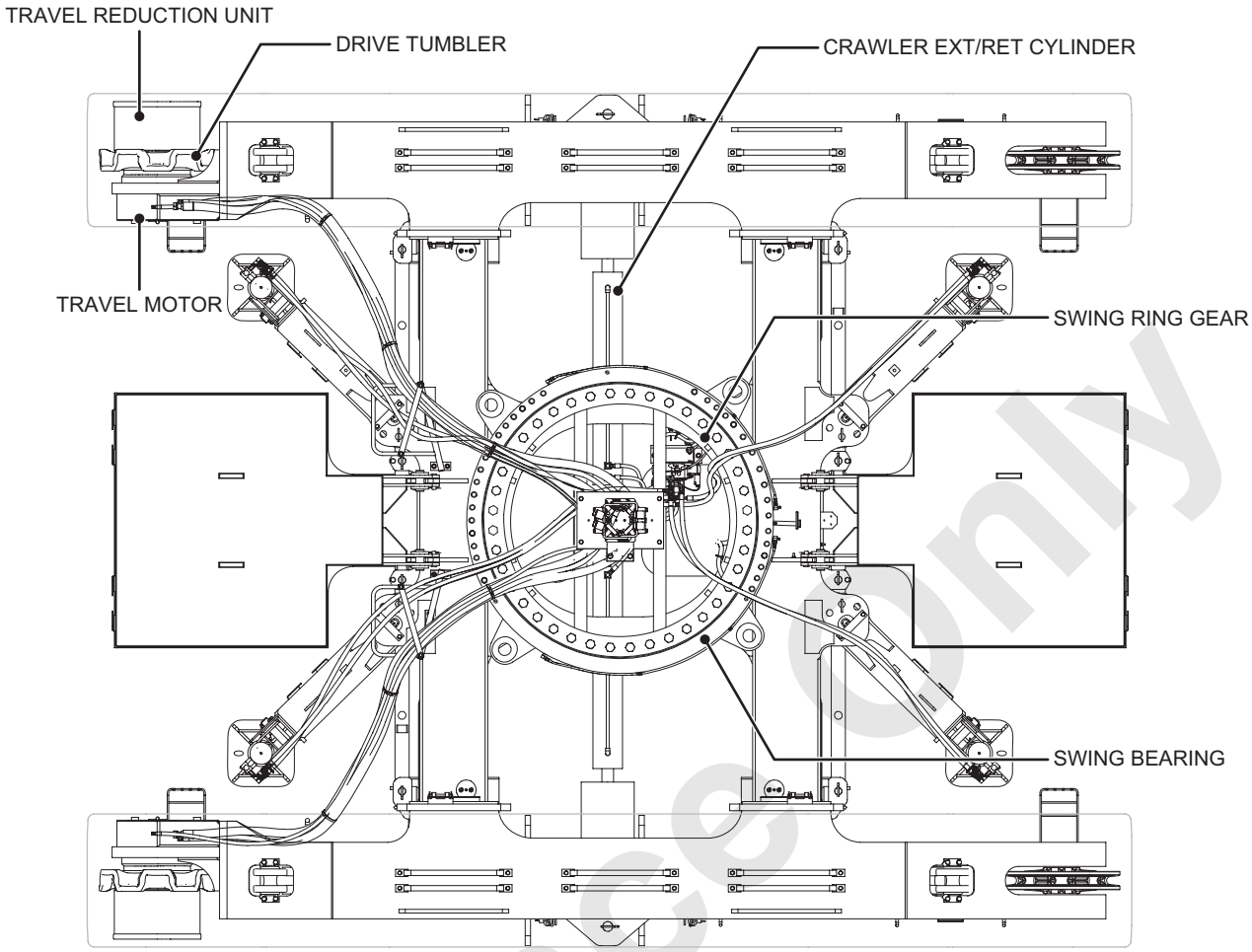

Reference Only

4.2 ENGINE

This chapter explains how to remove and re-install the engine.
Refer to the manual provided by the engine manufacturer for maintenance and repair details.

4.2.1 REMOVAL OF THE ENGINE

Proceed as follows when removing the engine from the machine.

WARNING

Right after stop the engine, the oils and cooling water of the machine may be extremely hot and may cause scald.
Inspection, replacement, draining and replenishment are to be carry out after cool down.
Failure to observe this precaution may result in a serious injury.

CAUTION

Remove the pump drive assembly together with engine from the base machine.

CAUTION

When the oil is cool, warming up the oil to reasonable temperature (approx. 20 to 40 °C [68 to 104 °F]) and drain the oil.

Reference Only

1. Lower the boom on the ground.

2. Take out the ground cable first in the battery.

3. Drain the hydraulic oil, engine oil and cooling water.

4. Remove the cover of the diesel particulate filter and remove the flange bolts (4 pcs.) of the exhaust tube.

5. Remove the air cleaner, expansion reservoir and air inlet hoses from the engine.

6. The inter-cooler piping is secured on the guard beam.
   Remove these bolts.

7. Remove the electric wiring connectors which are connected to the diesel particulate filter and air cleaner.

8. Remove the guard and the engine hood assy. required to remove the engine and pump drive assy.

9. Remove the fan shroud from the radiator.

10. Remove the hyd. pump piping and label them.
    Put the cover on all the ports and hoses to prevent from entering of foreign objects.

11. Label on the engine cooling piping, inter-cooler, fuel piping, and electric wiring and remove them.
    Put the caps on the cooling water piping, inter-cooler piping and fuel piping to prevent from entering of foreign objects.

12. Check that all the electric wiring, mechanical connection and fuel piping are disconnected and there would be no interference for removing the engine.

13. Install the appropriate capacity of lifting gear to the engine.
    (The engine has three lifting hooks.)

14. Remove the bolts and washers from the rubber mounts on the engine and the power divider.

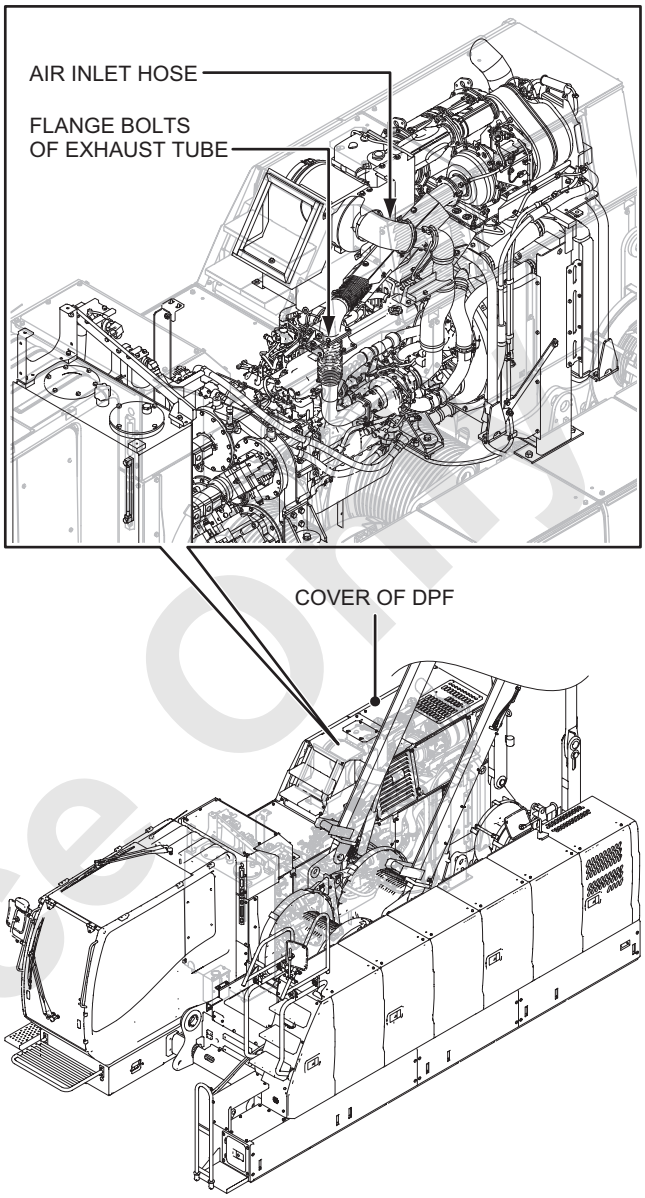

Reference Only

15. Lift up the engine and pump drive assy. as one unit slowly and take out from the machine. Weight is approx. 1,250 kg (2,756 lbs).

CAUTION

Take necessary action to prevent overturning of the engine.

16. Inspect the rubber mount and replace them if required.

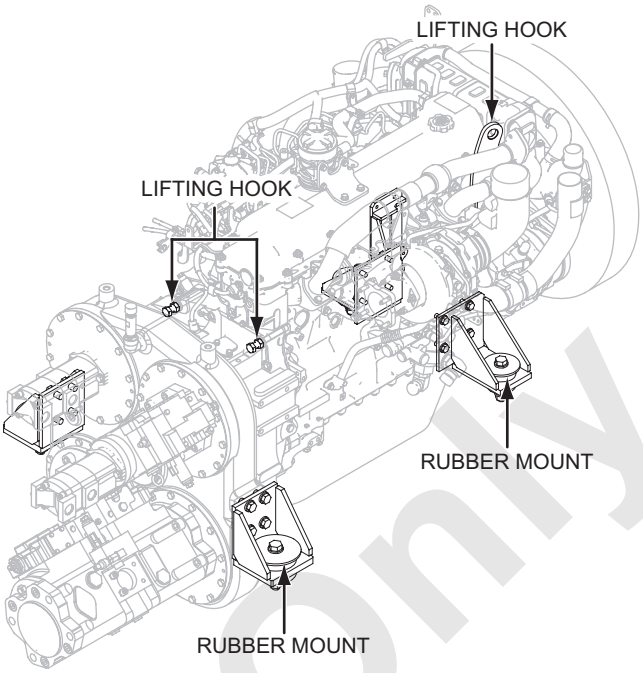

Reference Only

4.2.2 REPAIR AND MAINTENANCE OF THE ENGINE

Regarding the repair and maintenance of the engine, refer to the manual provided by the engine manufacturer.

The engine manufacturer	HINO MOTORS, LTD.	
The engine model	10000A-1	J08E-VV

Reference Only

4.2.3 INSTALLATION OF THE ENGINE

Proceed as follows when installing the engine.

1. Check to make sure that no fuel lines, coolant water hoses, mechanical connection parts or other items are left to interfere with the installation.

2. If the rubber mounts were removed, replace them.

3. Using a enough capacity lifting gear, lift the engine and place it onto the mounting place.

4. Use LOCTITE #263 on the rubber mount holding bolts and tighten to the specified torque.

Front side (Engine cooling fan side)	360 to 440 N·m (266 to 324 ft·lbs)
Rear side (Engine flywheel side)	504 to 616 N·m (372 to 454 ft·lbs)

5. Install all the hydraulic hoses to the hydraulic pumps.

6. Install the fan shroud.
   The clearance between the fan shroud and the fan should be even all around.

7. Connect all the electric wirings that were disconnected when the engine was removed.

8. Install all the fuel and inter-cooler piping that were removed when the engine was removed.

Reference Only

9. Install the guard, engine hood assembly.

WARNING

- **The battery generates the flammable hydrogen gas, keep away flammable to prevent an ignition and explosion.**
  Failure to observe this precaution may result in serious injuries, property damage or loss of life.
- **Do not put the tools or the likes on or near the battery to avoid any sparks.**
  Failure to observe this precaution may result in serious injuries, property damage or loss of life.
- **If the handling of booster cable is incorrect may cause battery explosion.**
  Ensure to take correct handling and not to made mistake of ⊕ terminal and ⊖ terminal.
  Failure to observe this precaution may result in serious injuries, property damage or loss of life.

10. Install the air cleaner, expansion reservoir and air inlet hoses that were removed when the engine was removed.
    Install the exhaust tube and the diesel particulate filter cover.

11. Refill the engine with coolant water and engine oil to the required levels.

12. Connect the battery cable.

Reference Only

13. Remove the air from the fuel lines.

    Loosen the air venting bolt of the fuel filter, move the priming pump forward and back to discharge the air from the fuel system.

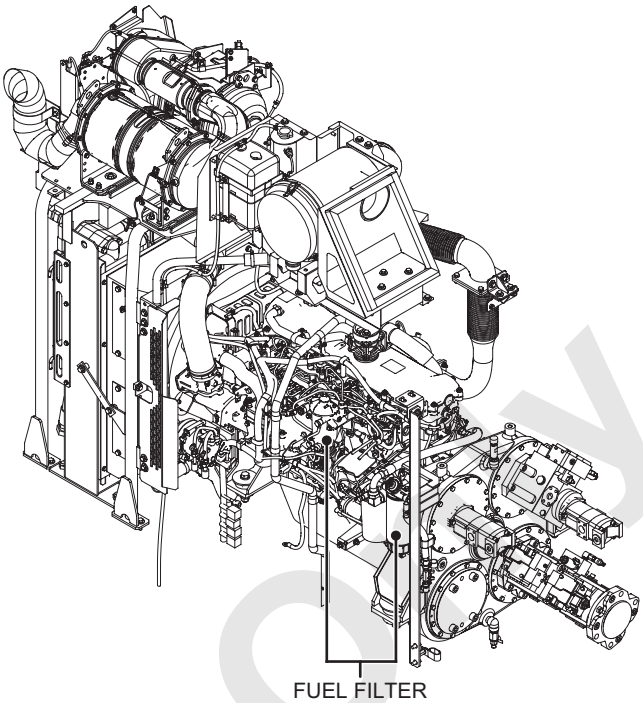

CAUTION

The maintenance method differs according to the fuel filter type.
Carefully check the type, then perform the maintenance work.

Refer to the article 7 “INSPECTION METHOD OF EACH POINT” of the operator’s manual.

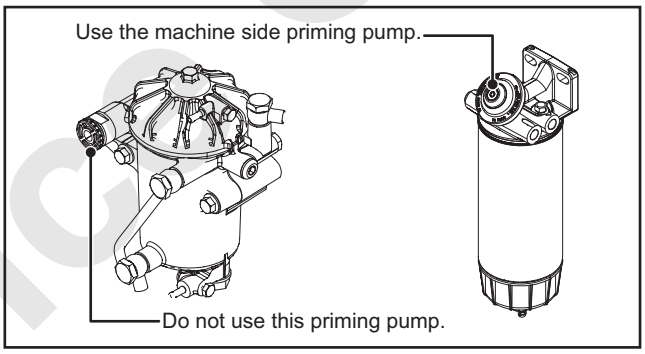

WARNING

Sound the signal horn to warn the surrounding personnel before starting the engine.
Failure to observe this precaution may result in a serious injury or loss of life.

Reference Only

14. Start the engine and set it to low idle.
    Check for water and fuel leaks, and any strange noises.

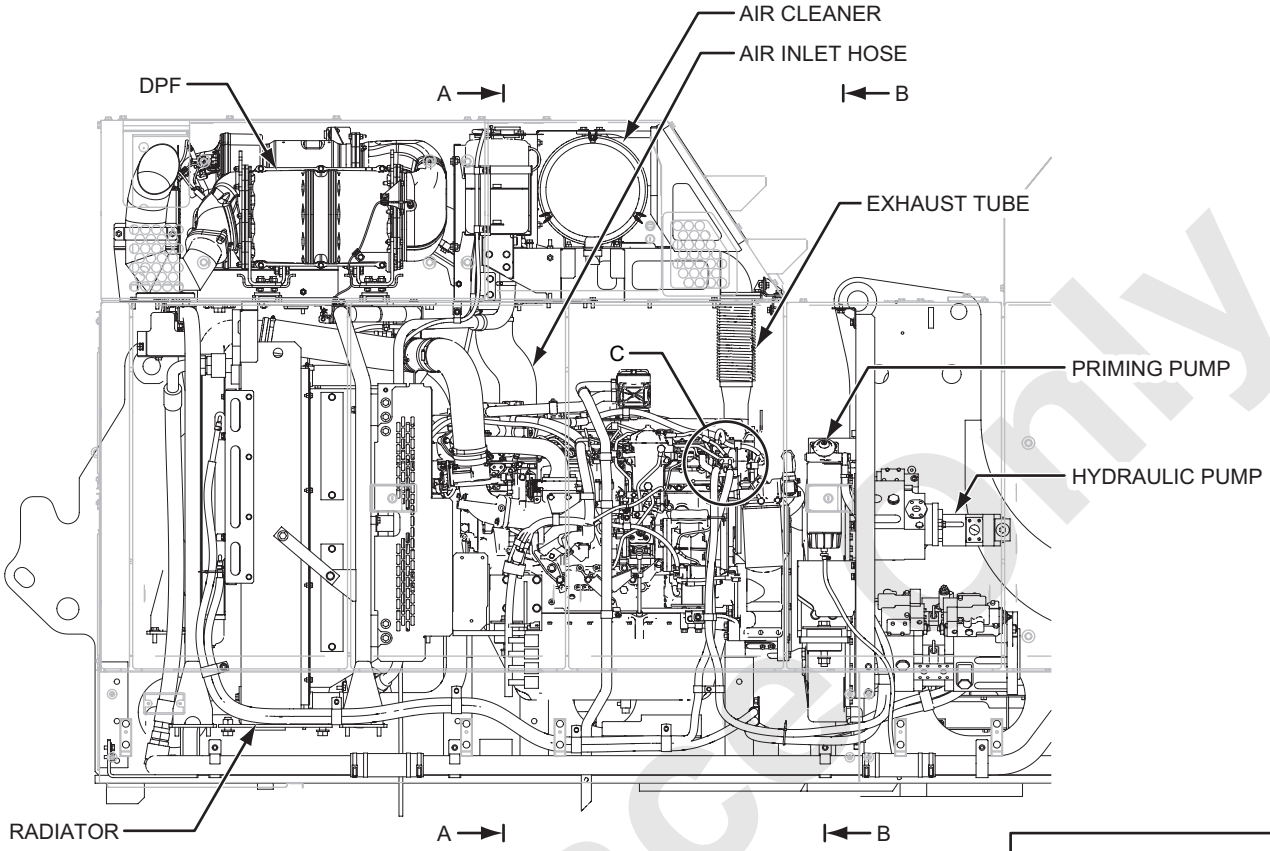

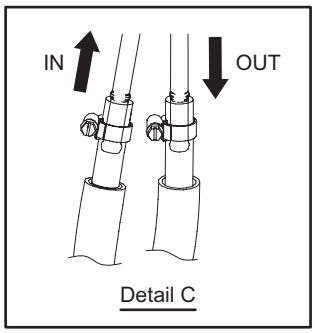

Detail C

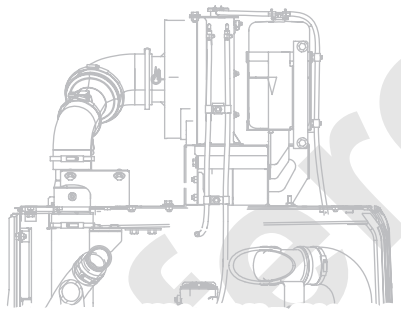

Tightening torque : 109 to 133 N·m (81 to 98 ft·lbs)
Apply LOCTITE #263

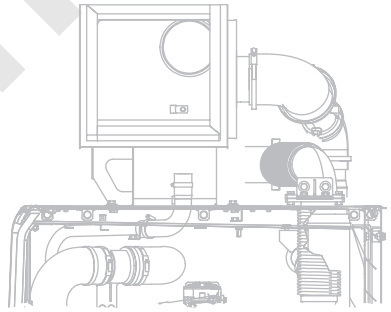

Tightening torque : 261 to 319 N·m (193 to 235 ft·lbs)
Apply LOCTITE #263

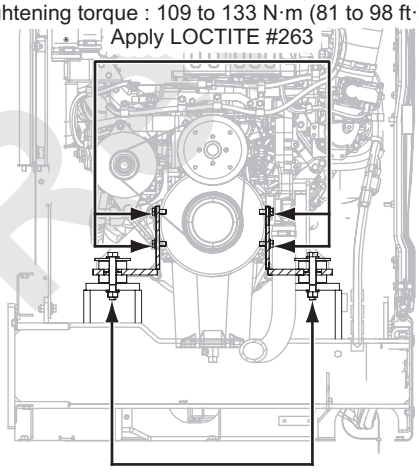

Tightening torque : 360 to 440 N·m (266 to 324 ft·lbs)
Apply LOCTITE #263

Section A-A
(Cooling fan [front] side)

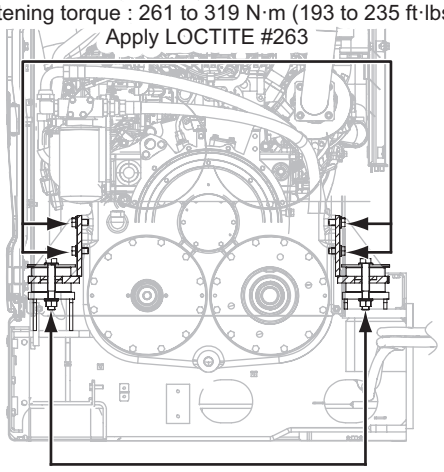

Tightening torque : 504 to 616 N·m (372 to 454 ft·lbs)
Apply LOCTITE #263

Section B-B
(Rear side)

Reference Only

4.3 PUMP DRIVE ASSEMBLY

This chapter explains how to remove, inspect, repair and re-install the pump drive assembly.
The pump drive assembly is mounted directly onto the rear of the engine.
It consists of a coupling, a power divider, main pumps, and 2 section gear pumps, swing pump and 2 section gear pumps which are connecting to the swing pump.
The power of the engine is transferred from a flywheel through the coupling to the input shaft and the helical gear of the power divider.
The power then is divided by 3 sets of helical gears (4 sets when option is selected) to the main pump shaft, swing pump shaft, cooling pump shaft.
(Closed with the flange when free less is selected.)
(Refer to the article “4.3.3 REMOVAL OF EACH PUMP”.)

Reference Only

4.3.1 CONSTRUCTION OF THE POWER DIVIDER

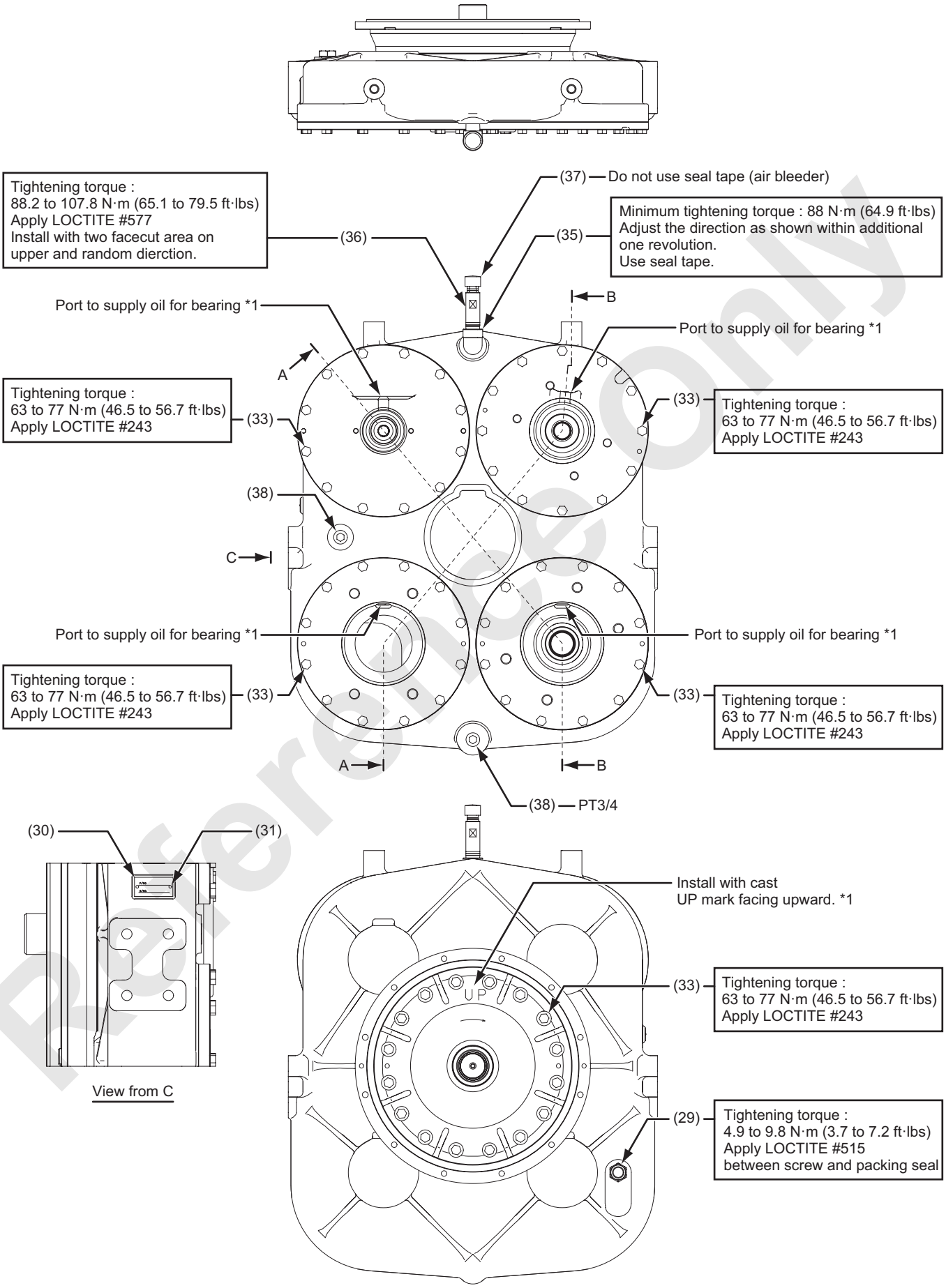

Reference Only

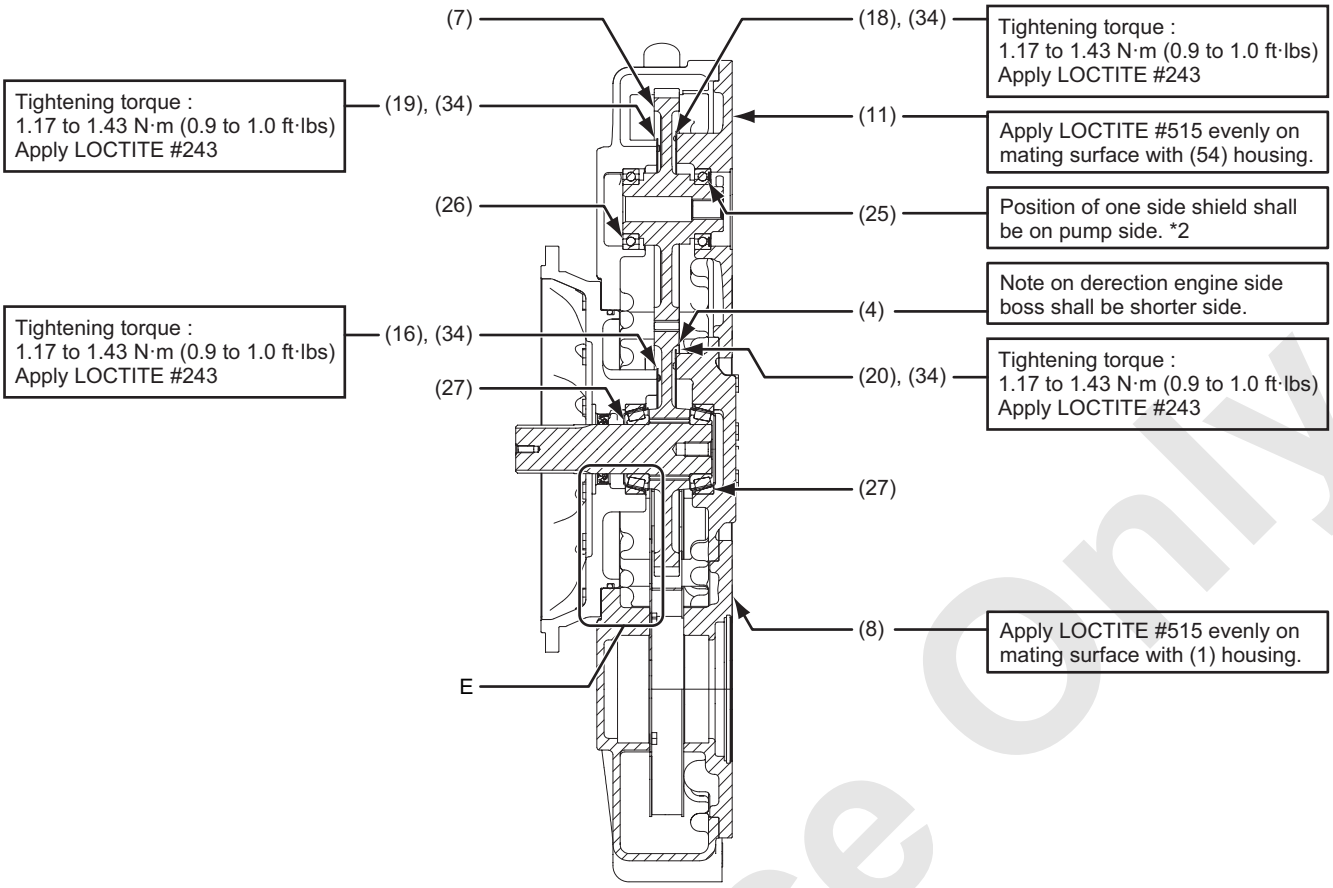

Section A-A

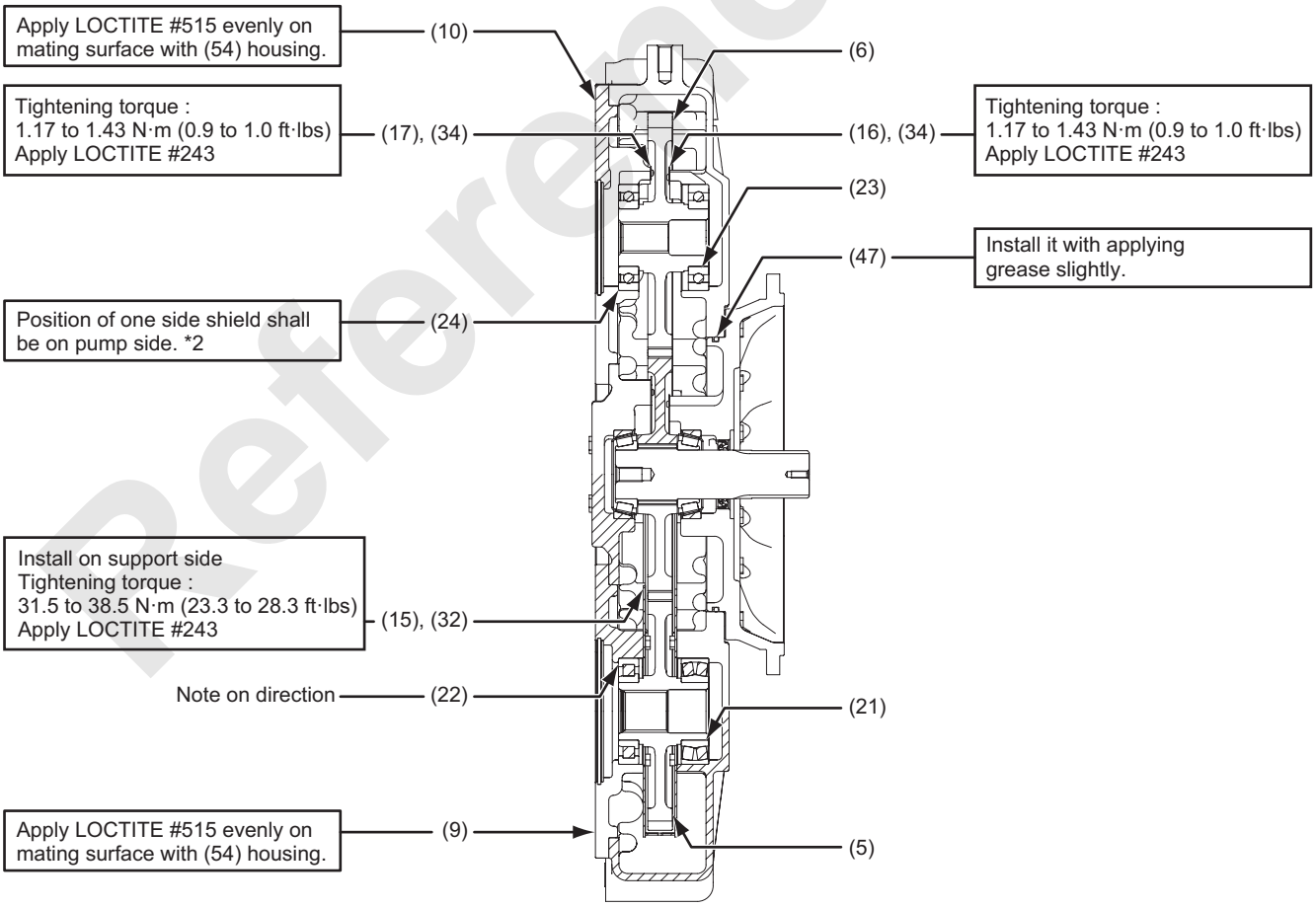

Section B-B

Reference Only

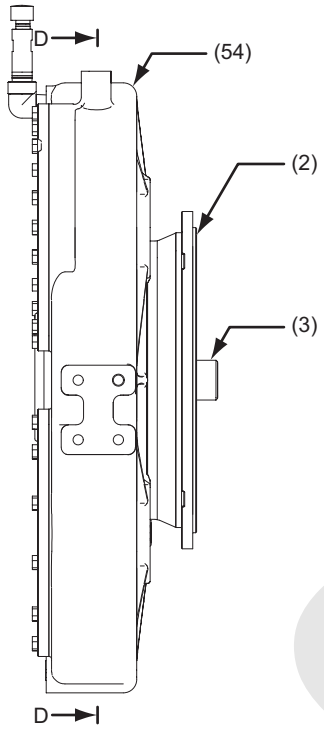

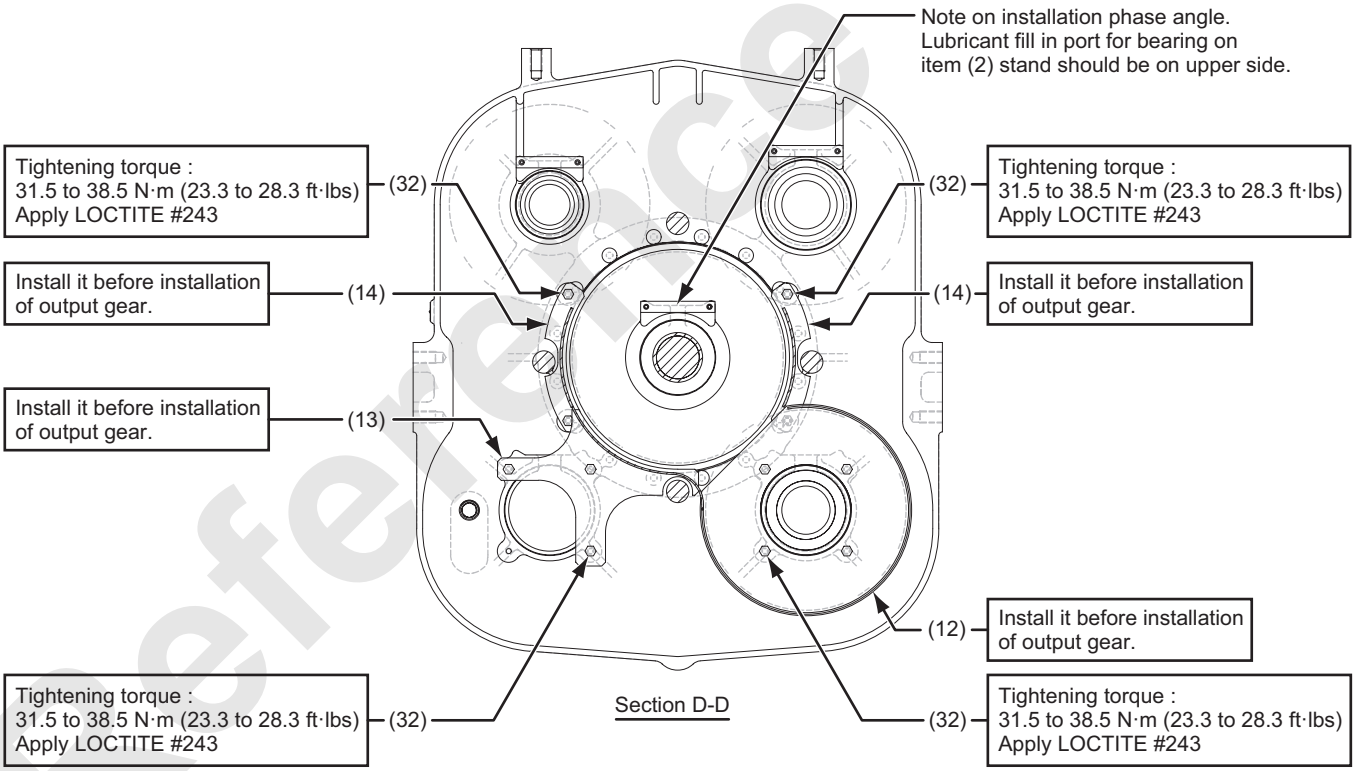

Reference Only

SHIM (ITEM 39 to 46) ADJUSTING PROCEDURE

1. Assemble (54) housing, (2) stand, (3) shaft and (27) bearing tentatively without inserting the shims.
   (47) O-ring and (28) oil seal to be installed to (2) stand after adjustment of shims.

2. Place the (54) housing so that (3) shaft is to be faced upward.

3. Confirm if the clearance between (54) housing and (2) stand is evenly by checking with thickness gauge and tighten the (33) hex head socket bolt (for mounting the stand) 4 locations at even space.
   (Tightening torque 19.4 to 23.6 N·m [14.3 to 17.4 ft·lbs] without LOCTITE)

4. Loosen the (33) hex head socket bolt and take them off.

5. Rotate the (3) shaft 2 to 3 turns with hand.
   (So that removing the preload from the (27) bearing)

6. Measure the clearance between (54) housing and (2) stand with thickness gauge.

7. Select the shims (39 to 46) so that the total thickness of shim = Amount of clearance “S” + (0.15 to 0.25) = “X”

8. Insert selected shims to the clearance and assemble again tentatively.

9. Again rotate the (3) shaft 2 to 3 turns by hand and confirm the (27) bearing has no preload.

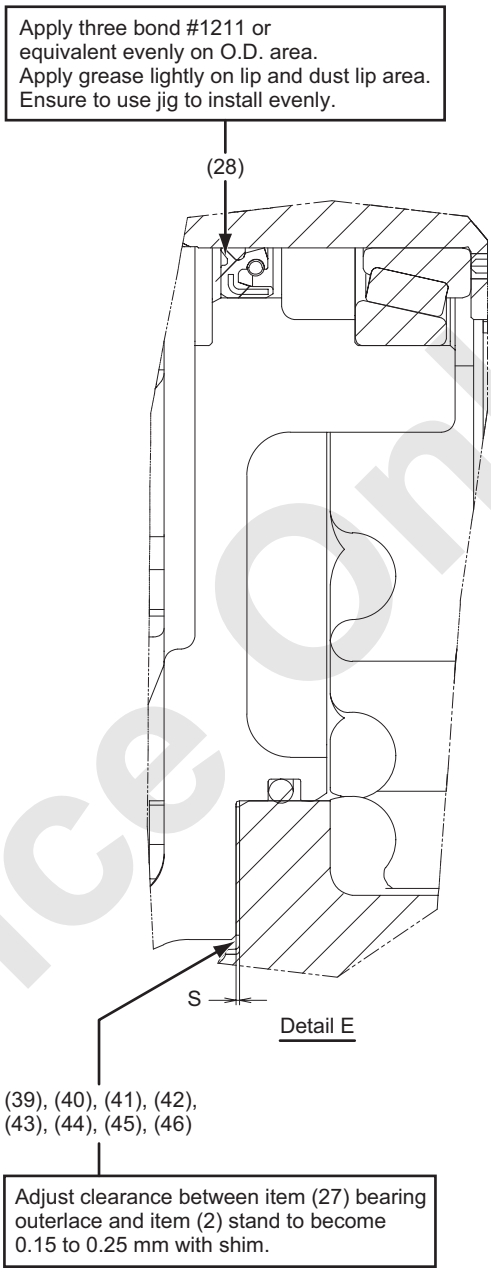

Reference Only

POWER DIVIDER

(2) Stand
(3) Shaft
(4) Gear
(5) Gear
(6) Gear
(7) Gear
(8) Support
(9) Support
(10) Support
(11) Support
(12) Plate
(13) Plate
(14) Plate
(15) Plate
(16) Plate
(17) Plate
(18) Plate
(19) Plate
(20) Plate
(21) Bearing
(22) Roller bearing
(23) Ball bearing
(24) Ball bearing
(25) Ball bearing
(26) Ball bearing
(27) Roller bearing
(28) Oil seal
(29) Oil level gauge
(30) Plate
(31) Rivet
(32) Capscrew
(33) Capscrew
(34) Machine screw
(35) 90 degrees elbow
(36) Tube
(37) Cap
(38) Plug
(39) Shim
(40) Shim
(41) Shim
(42) Shim
(43) Shim
(44) Shim
(45) Shim
(46) Shim
(47) O-ring
(54) Housing

*1 Take note of installation phase angle of pump mounting bolt hole and bearing oil fill port of item (2) stand and item (8), (9), (10), (11) support. (See figure)

*2 Install item (24), (25) bearing so that position of one side shield becomes on pump mounting side. (See figure)

Reference Only

4.3.2 CONSTRUCTION OF THE COUPLING

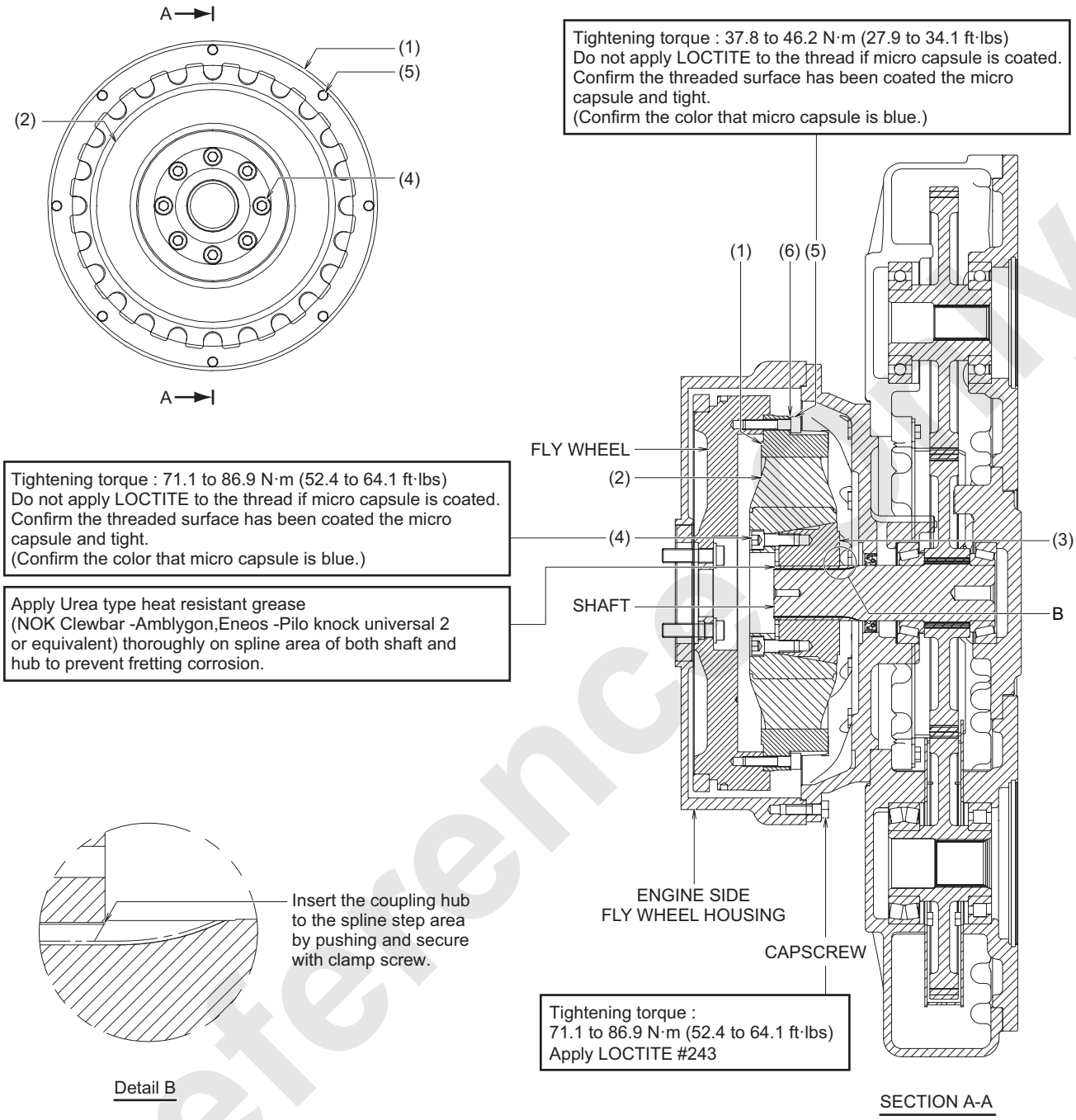

Coupling

(1) Outer ring
(2) Rubber body
(3) Inner hub
(4) Hex head socket bolt
(5) Hex head socket bolt
(6) Plane washer

Reference only

4.3.3 REMOVAL OF EACH PUMP

After the pump drive assembly is removed together with the engine from base machine, remove from the engine as following procedure.
As to removal of the engine is to be referred “4.2.1 REMOVAL OF THE ENGINE”

CAUTION

Remove the pump drive assembly together with engine from the base machine.

1. Drain the oil in the power divider through the port on the lower part of the power divider.

2. Remove each pump from the power divider.

Item	No,	Weight
MAIN PUMP	No.1, No.2	143.0 kg (315.0 lbs)
SWING PUMP+GEAR PUMP	No.3+No.6, No.7	57.4 kg (126.5 lbs)
GEAR PUMP (When “with free” is selected)	No.4, No.5	8.4 kg (18.5 lbs)

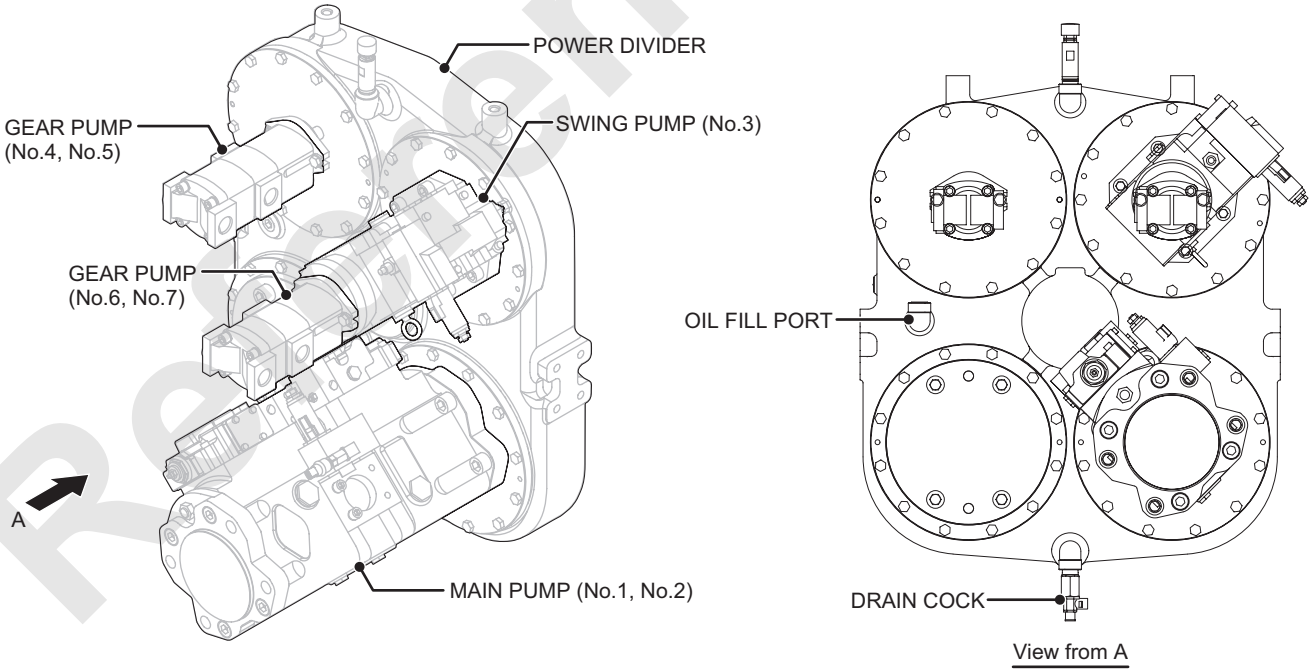

Reference Only

4.3.4 REMOVAL OF THE POWER DIVIDER

1. Attach the appropriate capacity of appropriate lifting gear to the threaded holes of power divider. (Thread size of hole: M16)
   Remove the capscrew which are mounted on the flywheel of the engine and slowly shift the power divider toward to the rear of the engine and remove the power divider after disengage the coupling.
   Weight of the power divider (Dry) : Approx. 210 kg (465 lbs)

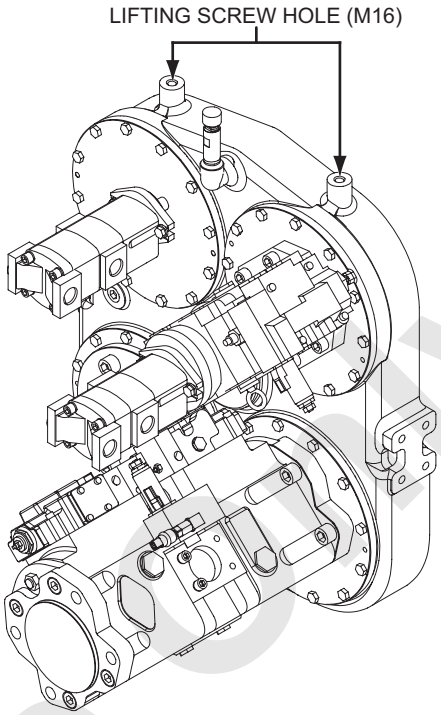

2. The main part of this coupling are installed on the center shaft of the power divider and will be removed together with the power divider.
   Remove the coupling outer ring which is remaining on the flywheel side.

* The parts which remain to the flywheel side are outer ring and bolts/washers for mounting.

Reference Only

4.3.5 REMOVAL OF THE COUPLING

1. Loosen the mounting bolts and remove only rubber body of the coupling.
   The outer ring of the coupling is secured to the engine side.

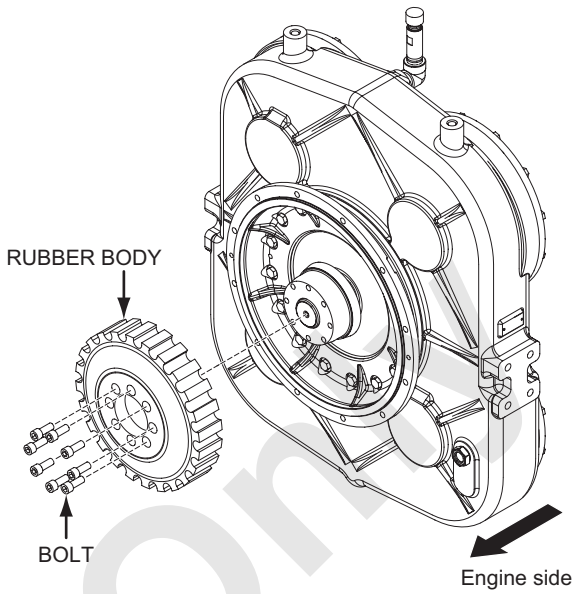

2. Draw the hub out from the shaft.

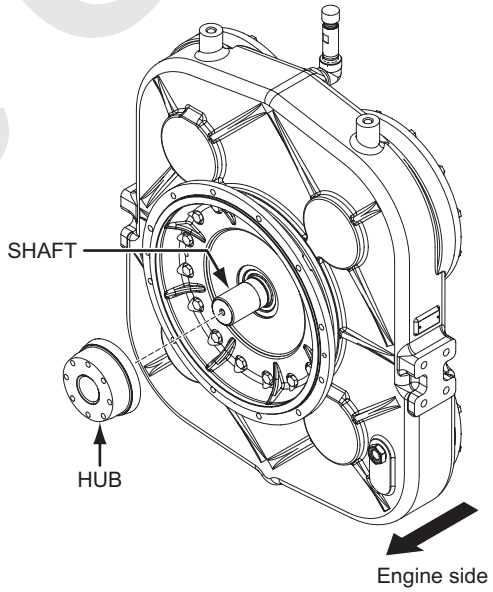

Reference Only

4.3.6 DISASSEMBLING THE POWER DIVIDER

Proceed as follows when disassembling the power divider.
Refer to "4.3.1 CONSTRUCTION OF THE POWER DIVIDER" or corresponding numbers in the explanation below.

1. Place the power divider on the block facing the flywheel side up.

2. Remove the (33) capscrews and remove the (2) stand using two pull out screw holes (M10) of the (2) stand.

3. Remove the (28) oil seal and the outer race of the (27) taper roller bearing from the (2) stand and then take out the (39) to (46) shims.
   In this time, keep the (39) to (46) shim as a set.
   If required, remove the (34) screw and the (16) plates.

4. Remove the (3) shaft and drive (4) gear as an assy.
   If required, pull out the inner race of both side (27) taper roller bearings and then pull out the drive (4) gear.

5. Pull out the outer race of the (27) taper roller bearing from the (1) housing.
   If required, remove the (34) screws and the (20) plate.

6. Place the power divider on the block facing the pump side up.

7. Remove the (33) capscrews and the (8) support using two pull out screw holes (M10) of the (8) support.

8. Remove the (32) capscrews and the (13) plate.

9. Remove the (33) capscrews and the (9) support using two pull out screw holes (M10) of the (9) support.
   If required, remove the (32) capscrews and the (15) plate.

10. Remove the (5) gear and both side (21), (22) bearings if required.

Reference Only

11. Remove the (32) cap screw and the (12) plate.

12. Remove the (33) capscrews and remove the (10) support using two pull out screw holes (M10) of the (10) support.
    If required, remove the (34) screws and the (17) plate.

13. Remove the (6) gear and both side (23), (24) bearings .

14. If required, remove the (34) screws and the (16) plate.

15. Remove the (33) capscrews and the (11) support using two pull out screw holes (M10) of the (11) support.
    If required, remove the (34) screws and the (18) plate.

16. Remove the (7) gear and if required, remove both side (25), (26) bearing.

17. If required, remove the (34) screws and the (19) plate.

18. If required, remove the (32) capscrews and (14) plate.

Reference Only

4.3.7 CHECK AND REPAIR OF THE POWER DIVIDER

Check all parts prior to reassembling the power divider. All questionable parts should be replaced to maximize the re-assembled power divider's service life and to avoid further break downs.
Checking should proceed in the following order.

1. Clean all the parts with fresh cleaning oil and blow them dry.

2. Check bearing balls, rollers, inner and outer races to see that they are free from pitching and scratches. Replace bearing if any defect is observed.

3. Bearings with no pitching or scratches should be coat the lubrication oil slightly, but replace any bearings that develop rattles due to excessive clearances toward the axial direction or circumferential direction.

4. Check the bearings' outer and inner races. Replace if any indications of slipping and/or rolling.

5. Check the teeth of all the gears and replace if any pitching, scratch, signs of friction wear, peeling or cracking.

6. Check the shafts and replace any with signs of cracking, deformation, wear at contact surfaces or bearing slippage are observed.

7. Check the splines of the shafts and gears. Replace or fix if any cracking, signs of wear or impact damage are observed.

8. Check the bearing casings and replace if any slip wear or other deformations.

9. Check the gear case and replace or fix if any cracks, deformation or scratches.

10. All the O-rings and oil seals should be replaced with new ones.

11. Check capscrew and screw hole threadings and replace or repair if any signs burr or permanent strain on the threads.

12. Take out the breather cap and clean in the pipe and check the orifice hole for clogging.

Reference Only

4.3.8 ASSEMBLING THE POWER DIVIDER

Assembling the power divider is in reverse order of disassembling.
Take extra care on the following points in assembling.
Refer to "4.3.1 CONSTRUCTION OF THE POWER DIVIDER" for corresponding numbers in the explanation below.

1. Apply clean oil on each part and then assemble. But ensure to remove any oil on the mating face of the (1) housing, the (2) stand and the (8) to (11) support and apply LOCTITE #515 evenly on these face and also apply LOCTITE #243 on the (33) capscrews and tighten them to torque 63 to 77 N·m (46.5 to 56.7 ft·lbs).

2. When assembling the (3) shaft, the (4) drive gear, the (27) taper roller bearing and the (2) stand, adjust the clearance shown in "4.3.1 CONSTRUCTION OF THE POWER DIVIDER" to become 0.15 to 0.25 mm with the (39) to (46) shims.

3. Install the (2) stand and the (8) to (11) support to the (1) housing to make oil groove comes to the position as shown in "4.3.1 CONSTRUCTION OF THE POWER DIVIDER" (UP cast mark upward)

4. After assembly, check that the input shaft turns lightly by hand.

Reference Only

4.3.9 INSTALLATION OF THE COUPLING

1. Push the hub in until contact to the step of the shaft (spline).

Note

Apply Urea type heat resistant grease to the spline of the shaft and hub to prevent the fretting corrosion.

The hub is to be secured its deformation to the shaft, therefore if it is used once may be difficult to reuse.
If the hub originally installed is removed, replace with new one.

2. Install the rubber body of the coupling to the hub and tighten the mounting bolts with specified torque.
(Tightening torque : 71.1 to 86.9 N·m (52.4 to 64.1 ft·lbs)
The outer ring of the coupling is secured to the engine side.

Note

Confirm the threaded surface has been coated the micro capsule and tight.
Do not apply LOCTITE to the thread if micro capsule is coated.

If the bolt is to be reused, apply LOCTITE #243.
Wipe off excess LOCTITE thoroughly to avoid adhesive to the rubber body scatters by rotation

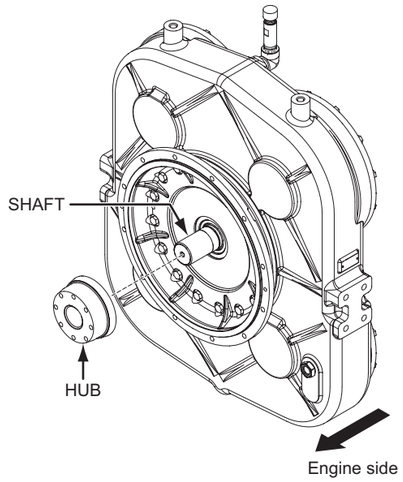

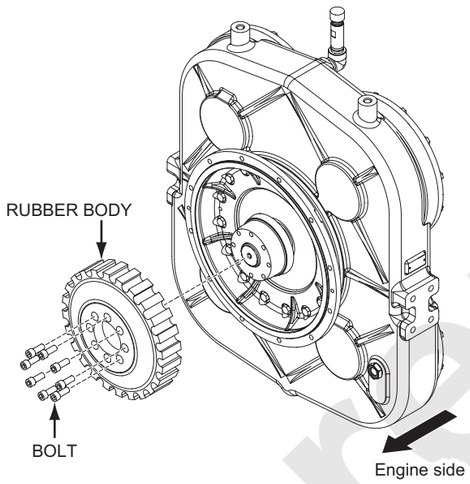

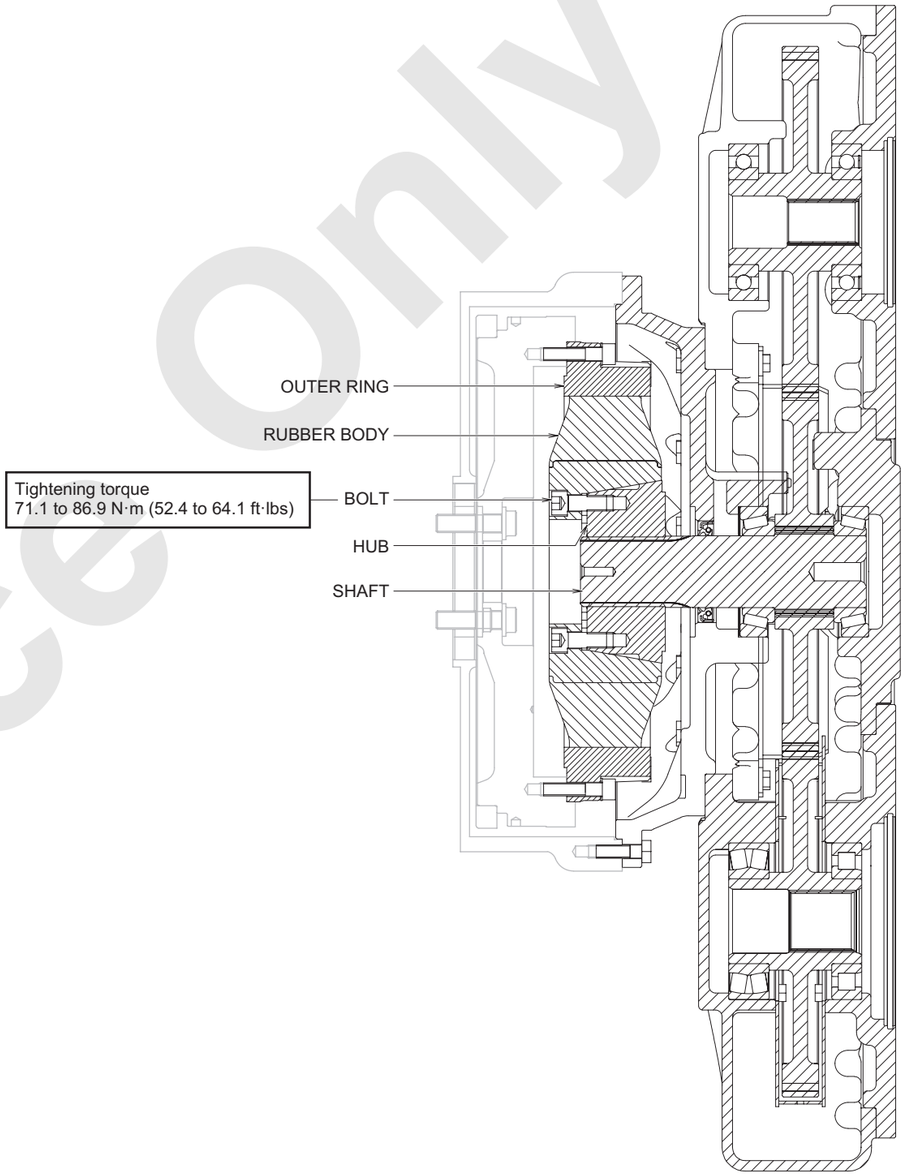

Reference Only

4.3.10 INSTALLATION OF EACH PUMP

1. Apply the grease to the O-ring to prevent drops it and installs the O-ring to the grooves of respective pumps.

2. Refer with the right figures; install each pump with the specified tightening torque.

3. Fill the lubricant to the specified level of the power divider and install a plug to the fill port. (More than red rounded mark of the level gauge and within the visible range of the oil level from the level gauge.)

Oil Amount	Oil Level hall be ubove red mark point on the level gauge, and be withln the range where level can be visually checked (Approx. 10.7 L [2.8 gal])
Specified Oil	Extreme pressure gear oil #90 Grade GL-3 by API classification

4. Refer to the article “4.2.3 INSTALLATION OF THE ENGINE”, Install engine and pump drive assembly as one unit to the machine.

5. Start the engine with low idling and confirm if any abnormal sounds, oil leakages etc.

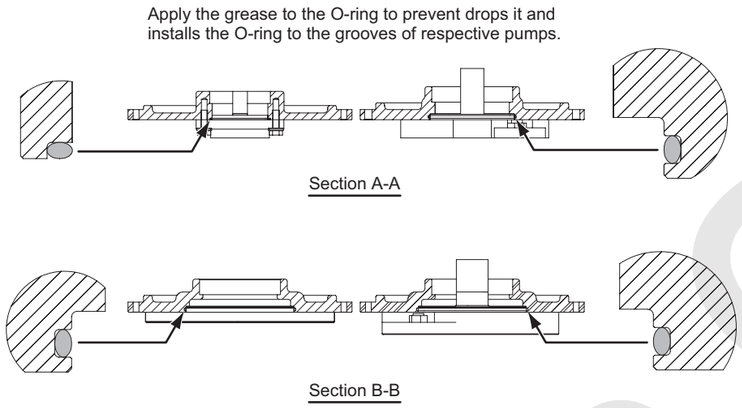

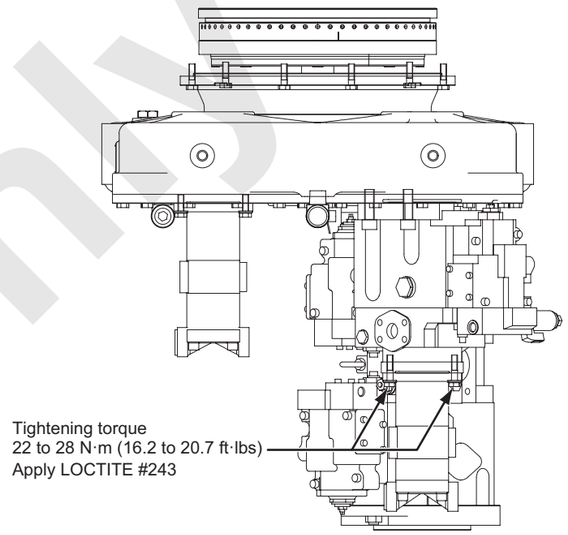

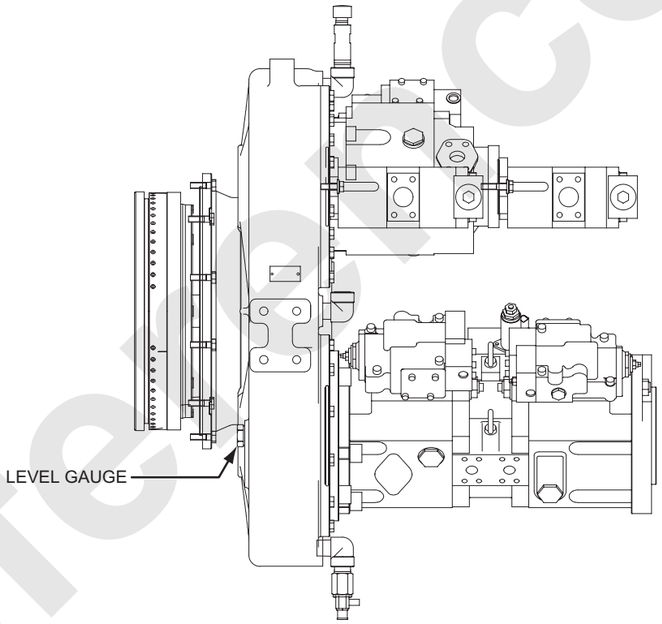

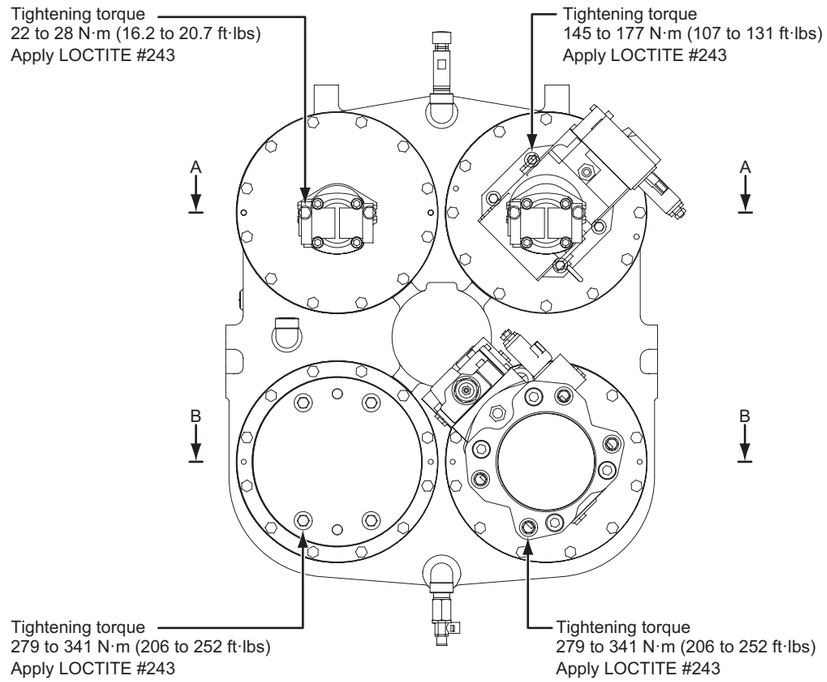

Reference Only

4.4 ASSEMBLY AND DISASSEMBLY OF RADIATOR

4.4.1 CONSTRUCTION OF THE RADIATOR

THE WEIGHT OF EACH PARTS FOLLOWING TABLE

Radiator assy	150 kg (335 lbs)
Radiator	25 kg (55 lbs)
Inter-cooler	24.5 kg (54 lbs)
Oil cooler	30 kg (66 lbs)
Frame	51 kg (112 lbs)
Shroud	8 kg (18 lbs)

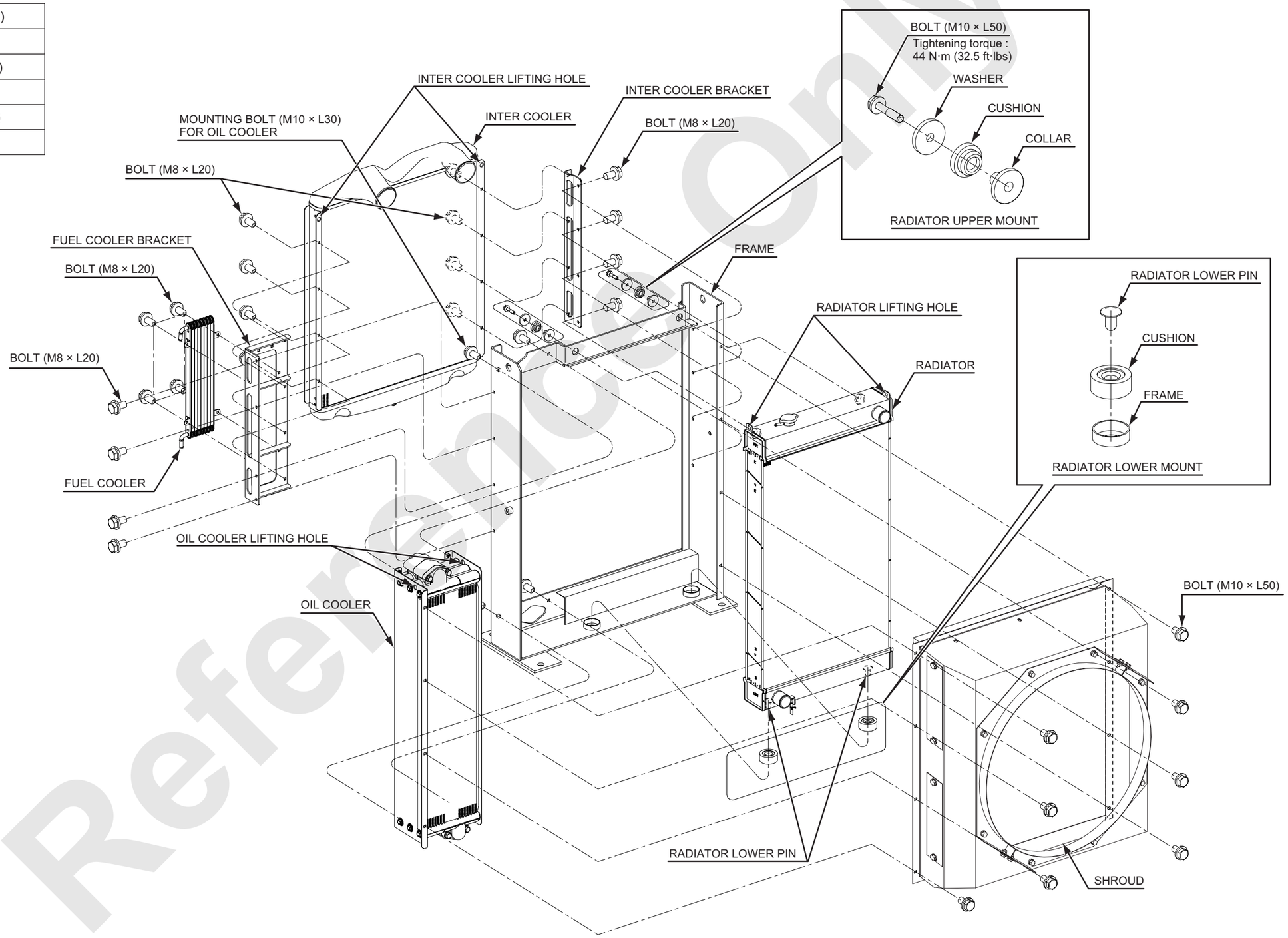

Reference Only

4.4.2 REPLACEMENT ORDER OF RADIATOR CORE

Note

Removal of the oil cooler is not required.

CAUTION

All the cores are made of aluminum.
Ensure not to apply any nicks or gouges.

1. Remove the shroud and the inter-cooler.
   Lift and hold the inter-cooler when removing it's mounting blots.

2. Remove the bolts (2 pcs) for radiator mount.

3. Hooking to the lifting holes provided at both end of the radiator and lift up the core to right above direction.
   In case of removal of the fuel cooler and oil cooler, remove the bolts (4 pcs) and pull them up.

4. Align the radiator lower pin and the lower cushion and insert the radiator core.

5. Fix the radiator upper mount portion as described in the drawings while lifting the radiator core.
   The female thread for the mounting bolt is helicoid insert, take extreme care of tightening torque when the bolting up.
   M10 bolt (for helicoid insert) tightening torque : 44 N·m (32.5 ft·lbs)

6. Install the shroud and the inter-cooler.

7. The tightening torque for each bolts, see following table.

Size	Tightening torque
M8	16 to 34 N·m (11.8 to 25.1 ft·lbs)
M10	34 to 74 N·m (25.1 to 54.6 ft·lbs)
M12	55 to 123 N·m (40.6 to 90.7 ft·lbs)

Reference Only

4.5 DEF/AdBlue® SCR SYSTEM

DEF/AdBlue® SCR system is a system for emission control.
The emission from diesel engine creates NOx due to oxidize of nitrogen in the air.
DEF/AdBlue® system is to split poisonous NOx into nitrogen and water by injection with DEF/AdBlue® in the muffler and purify exhaust gas.

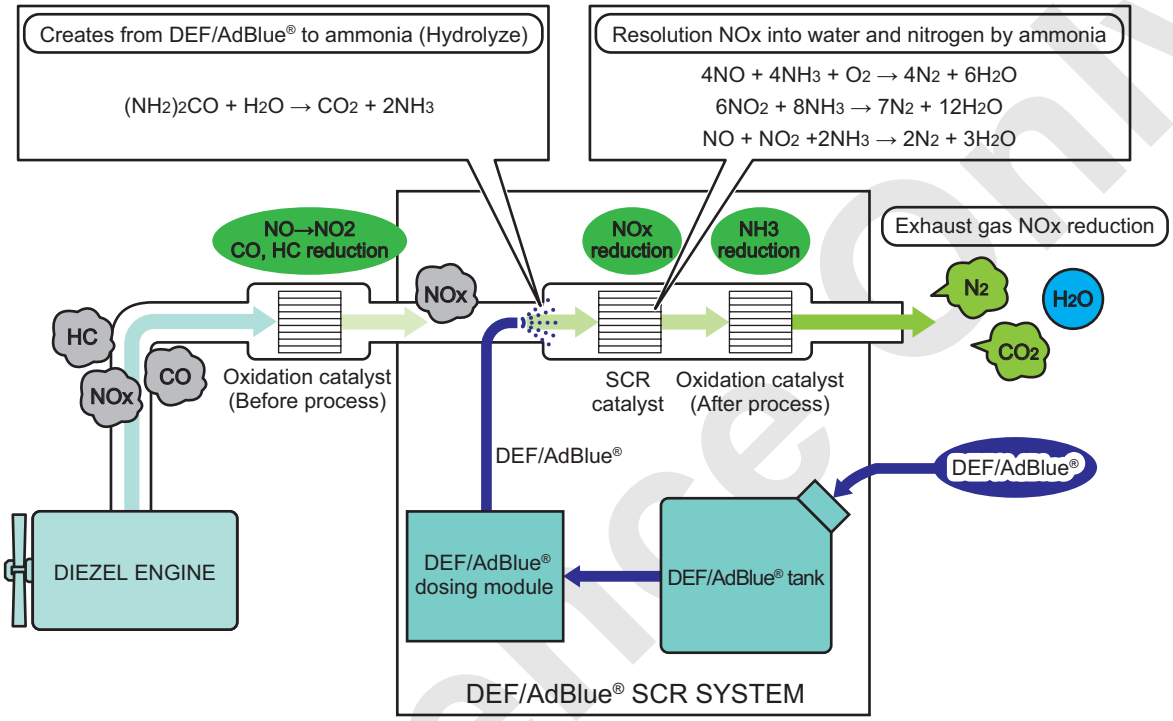

Reference only

Handling of DEF/AdBlue®

- DEF/AdBlue® is the product from the industrial urea solution is dissolved with the pure water of which is colorless and transparent 32.5% urea solution.
  Urea solution is colorless and harmless liquid and widely used for cosmetics, pharmaceuticals and fertilizers.
  DEF/AdBlue® is the safe and harmless product, not require any official qualification to handle it.
- DEF/AdBlue® is not specified as dangerous article and/or poison and powerful drugs.
  It is possible to store the goods under the general climate in the world for long period.
  However, should not be exposed to direct sunlight and keep in well ventilated place.
- DEF/AdBlue® is frozen at -11°C (12°F) with urea solution temperature.
- The pot life of DEF/AdBlue® is differ with stored temperature as shown below.

Stored Temperature °C (°F)	Pot Life
0 (32)	∞
10 (50)	75 years
20 (68)	11 years
30 (86)	23 months
40 (104)	4 months
50 (122)	1 month
60 (140)	1 week

⚠ WARNING

Use the DEF/AdBlue® only.
Use other than specified DEF/AdBlue® or dilute with water, not only degradation in processing performance but also may resulted in damage the engine internal parts and other components.
In case of replenished other than DEF/AdBlue® in mistake, contact authorized Manitowoc distributor immediately.

Reference Only

After run control of DEF/AdBlue®

- When dosing of DEF/AdBlue® is stopped due to stop the engine, there is a control system to sucking back the DEF/AdBlue® from remaining DEF/AdBlue® in the lines.
  If the DEF/AdBlue® is remains in the lines may be it frozen at cold or crystallized by dryness and may lead to malfunction.
- The pumping sound can be hear after stop the engine but it is not the failure.
- When removing battery lines or disconnect wire harness/connectors at maintenance, wait until after run control is completed.
  If disconnect the battery line before completion of the after run, lead to the engine output limitation may be functioned.

As to frozen of DEF/AdBlue®

- DEF/AdBlue® is frozen at -11°C (12°F) with urea solution temperature.
- When judged as frozen by the respective temperature sensor, circulate the engine cooling water to the DEF/AdBlue® tank, DEF/AdBlue® supply module and DEF/AdBlue® lines as defreeze function is activate and melting the frozen DEF/AdBlue®.
- When frozen DEF/AdBlue® is judged as melt, inject DEF/AdBlue® when the injection condition is satisfied.
- Even when the DEF/AdBlue® is above -11°C (12°F), start the thermal function to the DEF/AdBlue® tank and DEF/AdBlue® lines if the DEF/AdBlue® is cold enough.

When disconnect the DEF/AdBlue® lines

- When remove the heat insulation on the DEF/AdBlue® lines, ensure to furnish in proper position for avoid frozen of DEF/AdBlue®.
- When disconnect the DEF/AdBlue® lines, install them without breaking, bending and kinking.
- When disconnect the DEF/AdBlue® lines, start the engine within 10 seconds after the key on for test run and confirm no engine cooling water leakage.
  Due to the length of DEF/AdBlue® lines, repeat this task 2 to 3 times.
  The cooling water shut valve opens 20 seconds after the key on regardless of ambient temperature and the cooling water flows as defreeze.

Reference Only

When dismantle the DEF/AdBlue® dosing module, DEF/AdBlue® supply module and DEF/AdBlue® sensor

When dismantle the DEF/AdBlue® dosing module, DEF/AdBlue® supply module and DEF/AdBlue® sensor, confirm engine cooling water level. If it is diminish in quantity, replenish the engine cooling water to FULL position and start the engine within 10 seconds and repeat 2 to 3 times.

FLOW WHEN THE AMBIENT TEMPERATURE IS HIGH

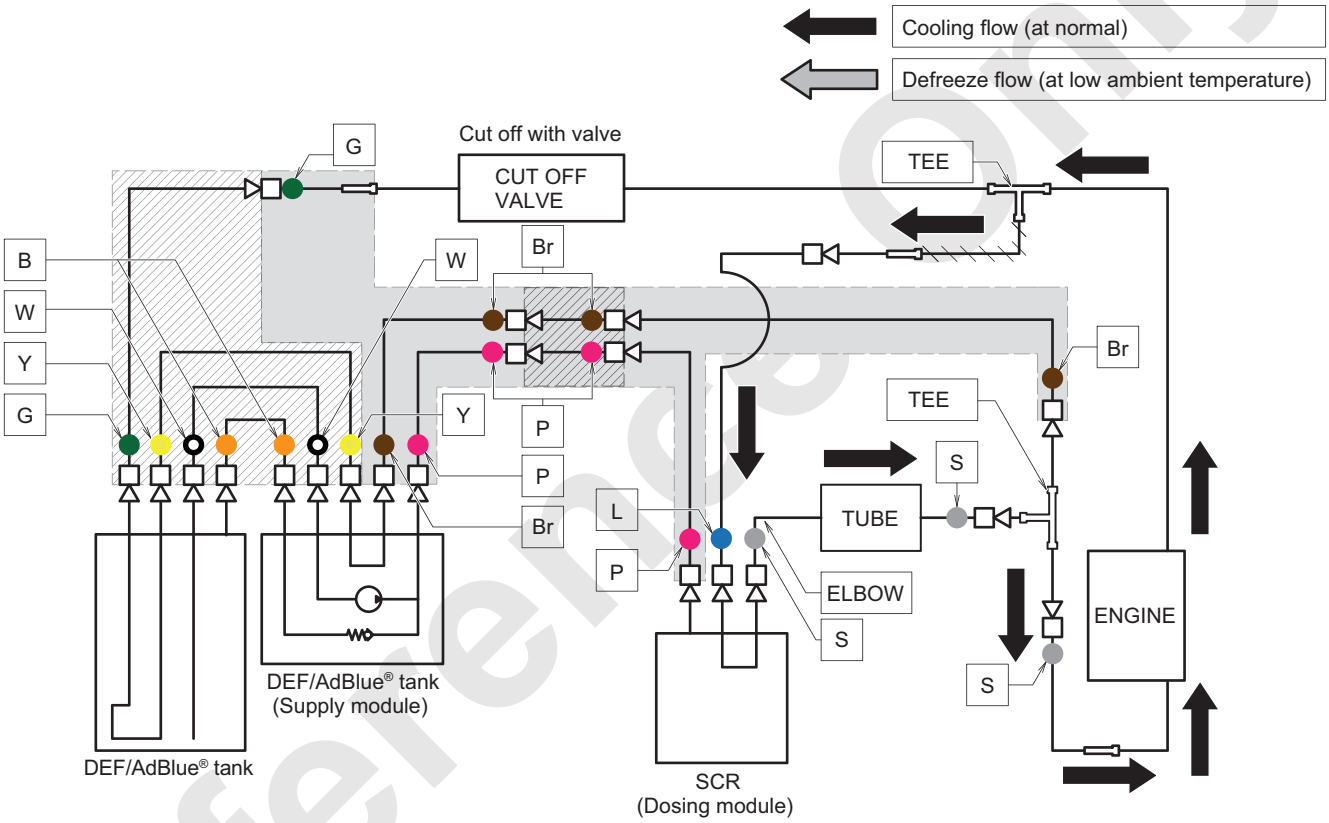

P	W	Y	G	L	Br	B	S
Pink	White	Yellow	Green	Blue	Brown	Black*	Silver

*Without ID. tape

Reference Only

FLOW WHEN THE AMBIENT TEMPERATURE IS LOW

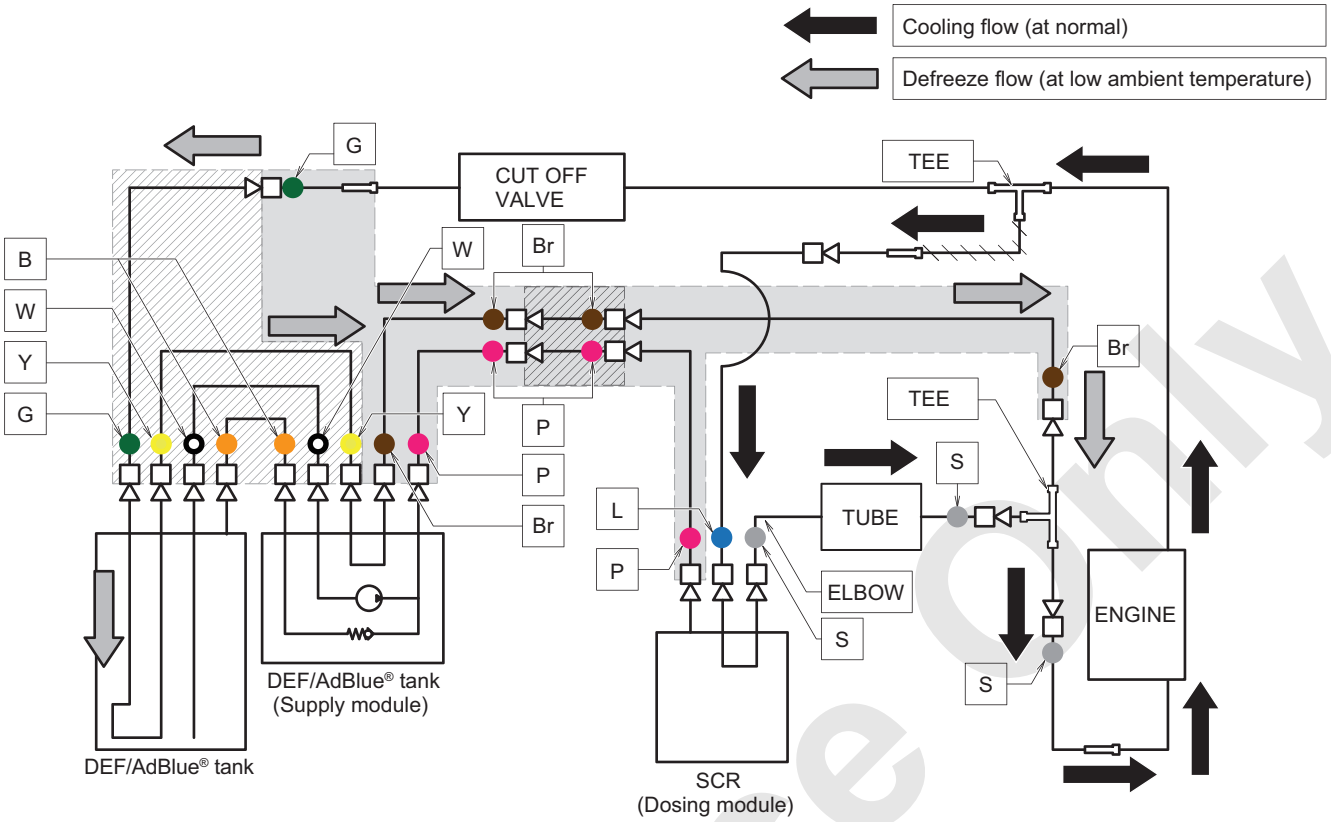

P	W	Y	G	L	Br	B	S
Pink	White	Yellow	Green	Blue	Brown	Black*	Silver

*Without ID. tape

Reference Only

4.5.1 DEF/AdBlue® TANK

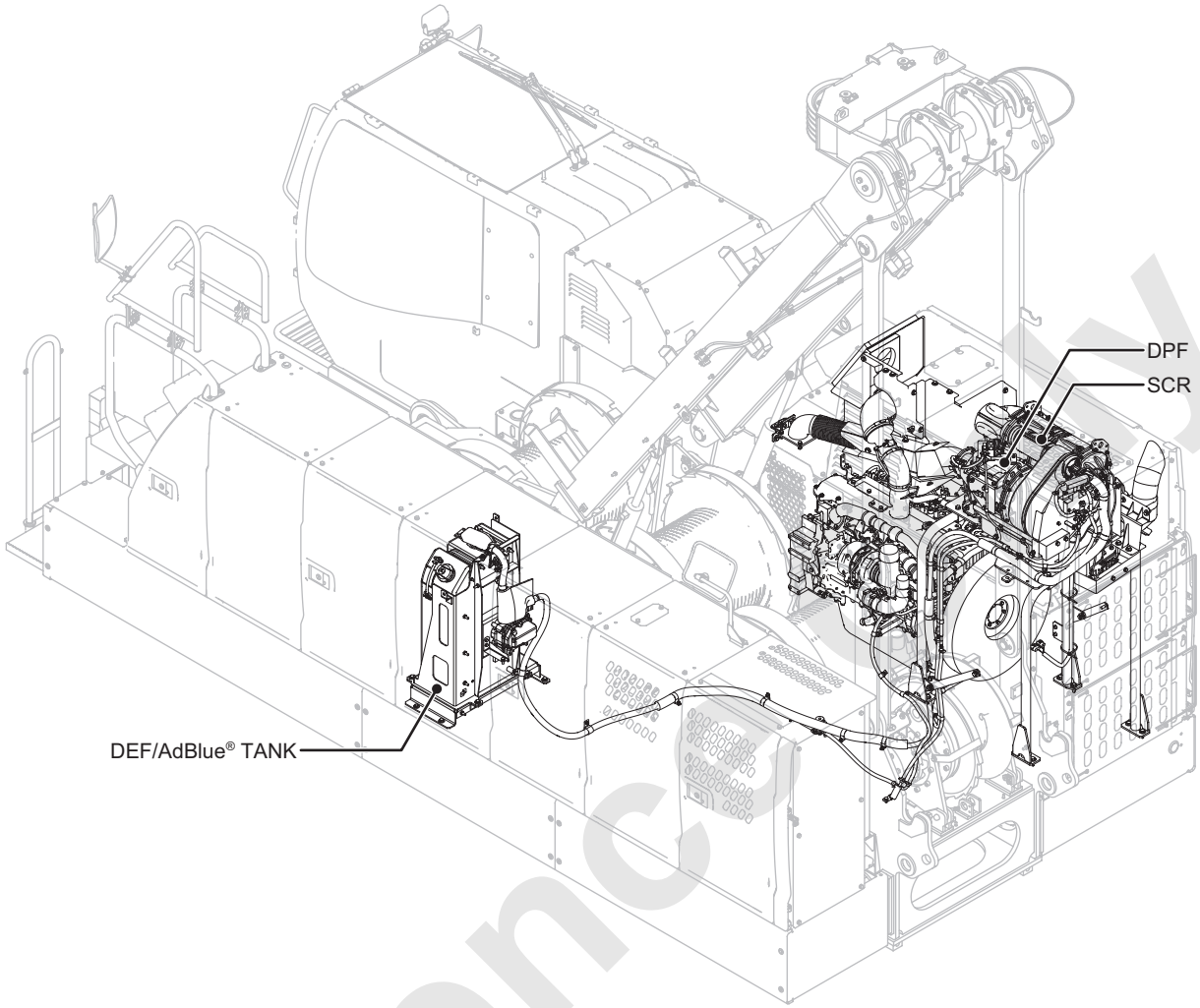

Reference Only

1. DEF/AdBlue® tank removal

Discharge contents in the DEF/AdBlue® tank and clean inside of DEF/AdBlue® tank and DEF/AdBlue® sensor.
To discharge the contents in the DEF/AdBlue® tank, suck up contents with a siphon pump which available in the market from the fill port.
Residual quantity of the contents is to be discharge from the drain port by removing the drain plug.
Use 10 mm hexagon head socket wrench for removing the drain plug.
When reinstalling it, attach a O-ring on the plug.

DEF/AdBlue® Tank	Mass	Approx. 72 kg (159 lbs)
	Volume	Approx. 60 L (15.9 gal)

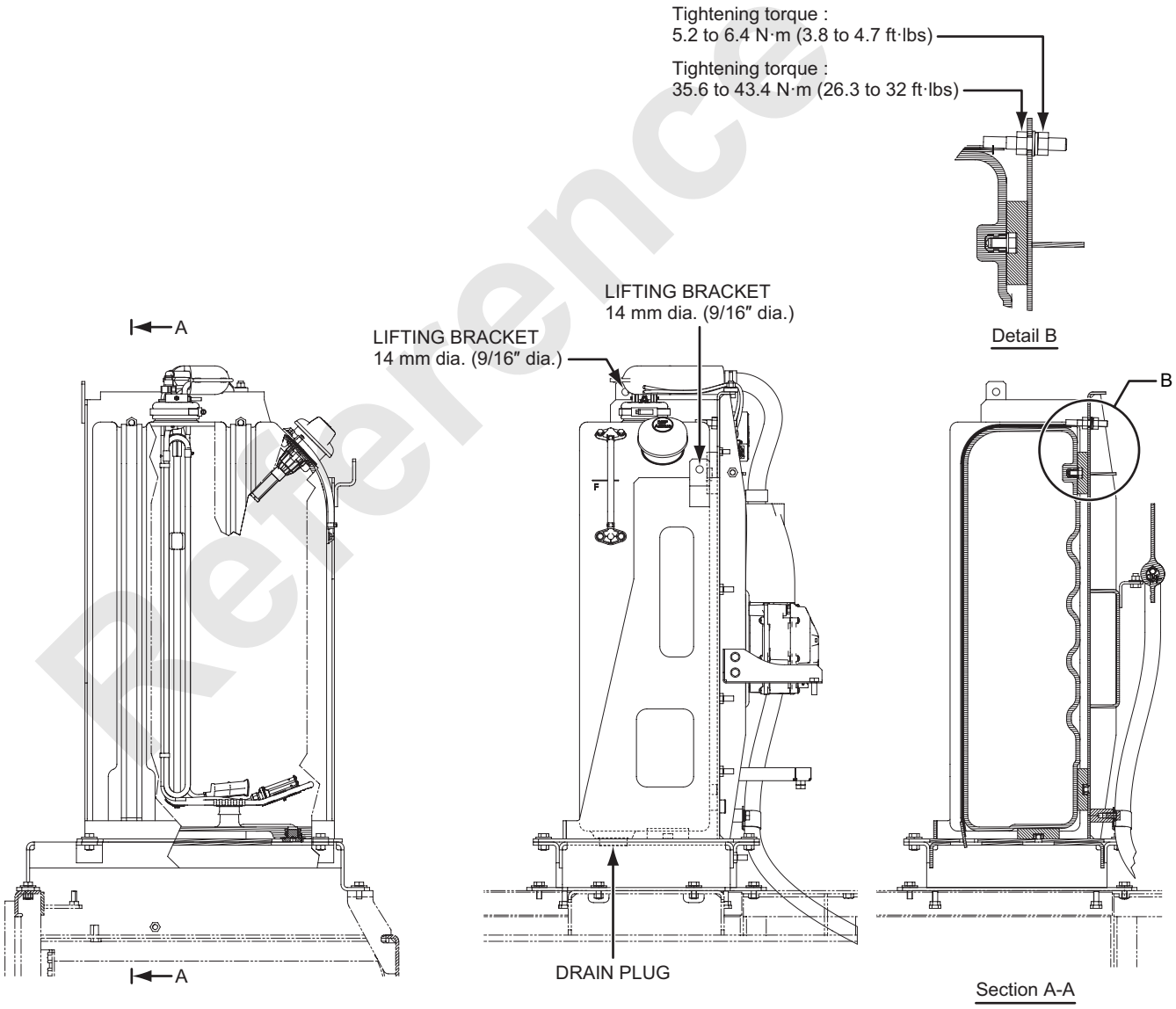

Reference Only

2. Sensor installation

(1) Insert a DEF/AdBlue® sensor cap to the protrude part of the tank bottom.
(2) Apply LOCTITE #243 to the mounting bolts for sensor controller and tighten with 7.3 to 8.9 N·m (5.4 to 6.6 ft·lbs).
(3) Tighten the clamp on the sensor installation part with 5.3 to 6.5 N·m (3.9 to 4.8 ft·lbs).

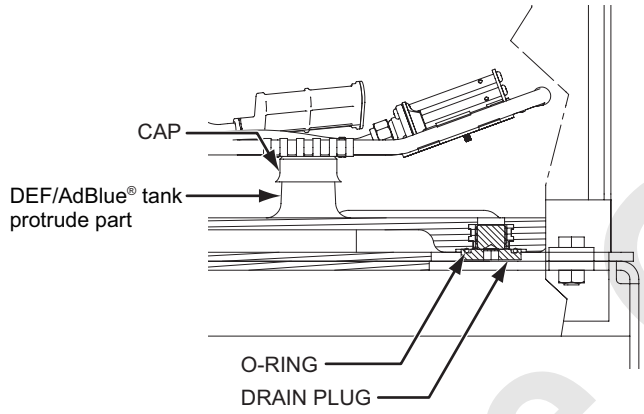

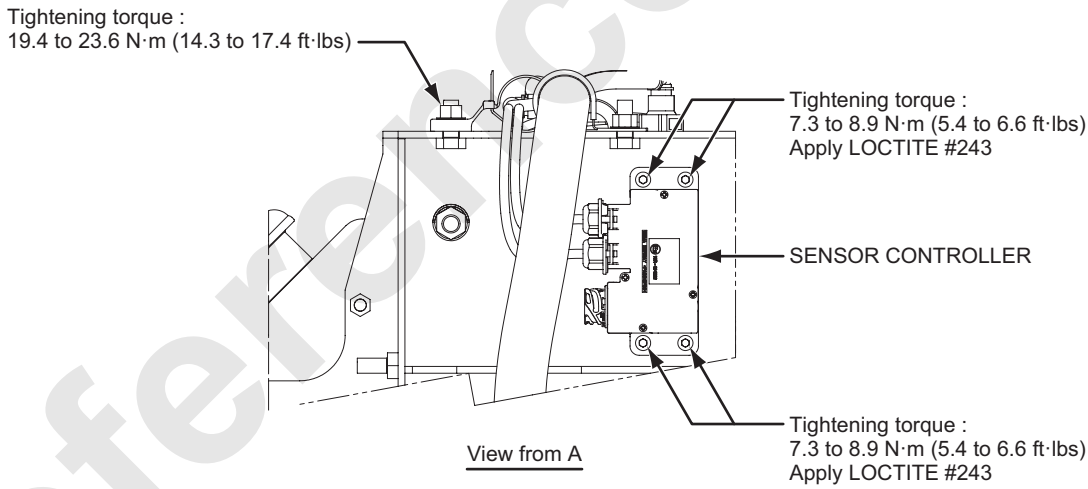

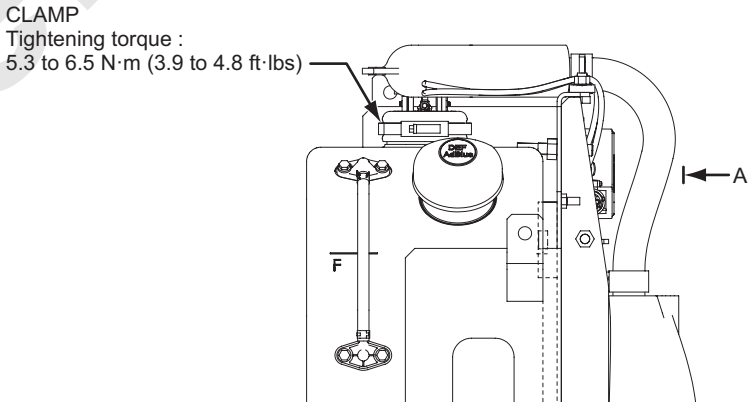

Reference Only

4.5.2 INDUCEMENT CONTROL SYSTEM

An inducement control is to be issued a warning display, alarming and decreasing machine output when the emission control is not functioned properly or possibility of malfunction.
And this control system urges to return to the normal condition.
The engine output decreases depending on the contents of occurrence and become difficult to operate as normal work.

The engine output will be limited by the inducement control when faced following conditions.

- DEF/AdBlue® level becomes lower.
- DEF/AdBlue® quality becomes deteriorated.
- Parts of SCR system failure.

Reference Only

The engine output limitation differs depend on respective conditions.

J08E

1	DEF/AdBlue® tank level warning	Conditions		Normal	RL1	RL2	RL3	RL4
				–	Warnig	Warning	Severe inducement	Final inducement
		Engine speed	At max. torque (rpm)	2,100	2,100	2,100	1,680	800
		Engine loading ratio	Max. load ratio at limitation (%)	100	100	100	50	0
2	DEF/AdBlue® quality abnormal warning	Conditions		Normal	RQ1	–	RQ3	RQ4
				–	Warning	–	Severe inducement	Final inducement
		Engine speed	At max. torque (rpm)	2,100	2,100	–	1,680	800
		Engine loading ratio	Max. load ratio at limitation (%)	100	100	–	50	0
3	DEF/AdBlue® SCR failure warning · SCR system failure · EGR system failure · NOx control abnormal	Conditions		Normal	–	TF2	TF3	TF4
				–	–	Warning	Severe inducement	Final inducement
		Engine speed	At max. torque (rpm)	2,100	–	2,100	1,680	800
		Engine loading ratio	Max. load ratio at limitation (%)	100	–	75	50	0

Reference Only

1. DEF/AdBlue® tank level lower

The output limitation will be limited step by step as follows.
Replenish with specified DEF/AdBlue® immediately.

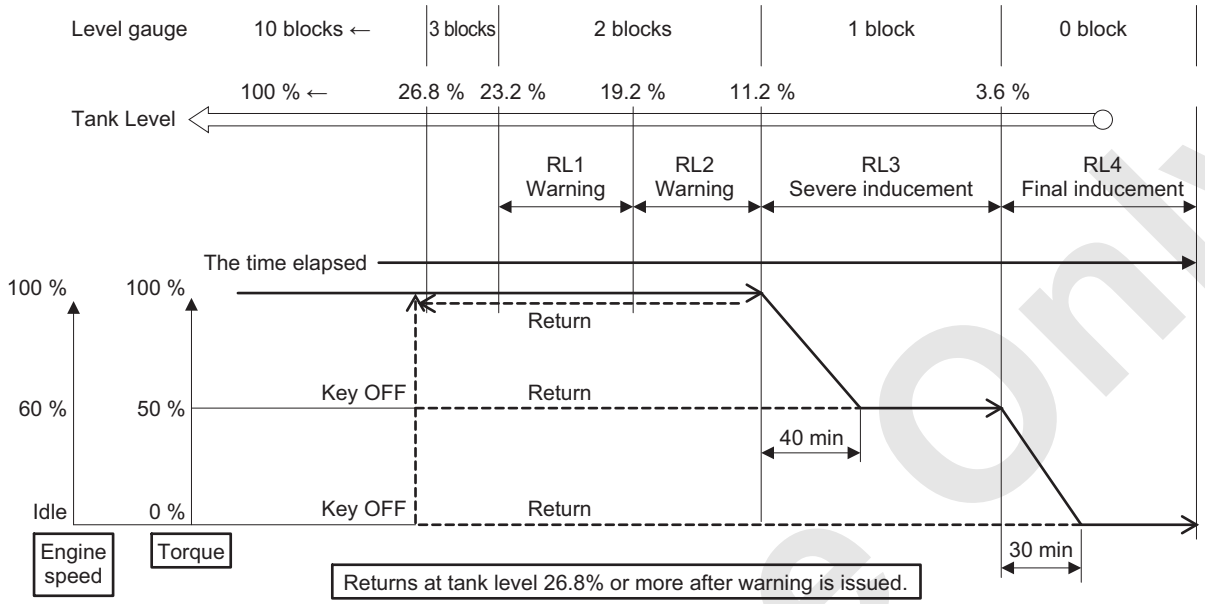

(1) DEF/AdBlue® tank level lower
(The method of release when display RL1 or RL2 on the monitor)

When warning is displayed, follow the instruction below in order.

(A) Turn a key switch to OFF position.
(B) Replenish the DEF/AdBlue® (20 L [5.3 gal] or more)
(C) Turn the key to ON position and confirm if the warning has been released.
(After replenish the DEF/AdBlue® of which reflects to the monitor may be required few minutes)
If in case the warning is still existed, confirm the residual DEF/AdBlue® is more than 3 blocks and repeat the above steps (A) to (C)

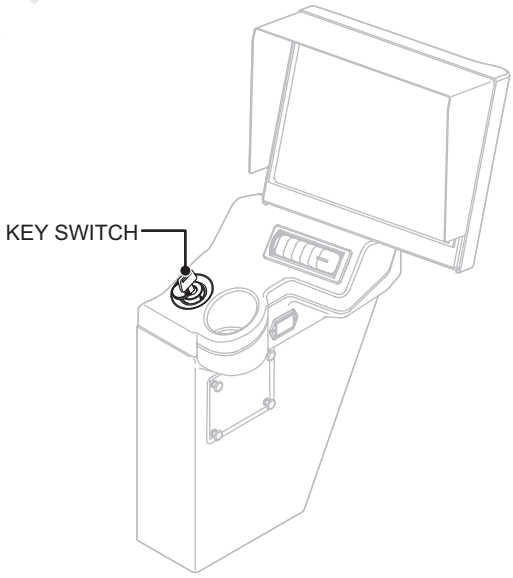

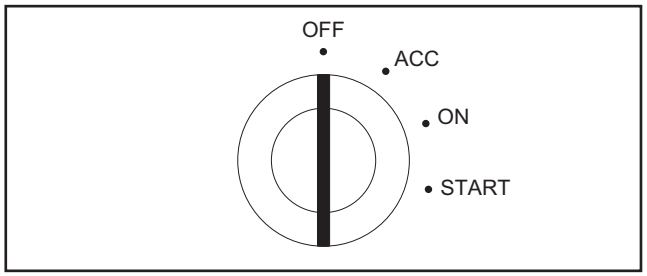

Reference Only

(2) DEF/AdBlue® tank level lower
(The method of release when display RL3 or RL4 on the monitor)

When warning is displayed, follow the instruction below in order.

(A) Turn a key switch to OFF position.
(B) Replenish the DEF/AdBlue® (20 L [5.3 gal] or more)
(C) Turn the key to ON position and confirm if the warning has been released.
(After replenish the DEF/AdBlue® of which reflects to the monitor may be required few minutes)
If in case the warning is still existed, confirm the residual DEF/AdBlue® is more than 3 blocks and turn the key switch to OFF again.
(D) Confirm the acceleration grip is in low idle and control levers are in neutral position.
If in case of the G engine mode is selected, change to power mode.
(As for the G engine mode, refer to the article 2 “HOOK HOISTING / LOWERING OPERATION” of the operator’s manual.)
(E) Start the engine and confirm if the engine speed limit has been released.
(Turn the acceleration grip and the engine speed correspond with the grip.)
(F) If no warning is issued and the engine output limitation is released at step (E), normal returned already.
If in case the engine output is not released, turn the key switch to OFF position once, repeat the steps (D) and (E).

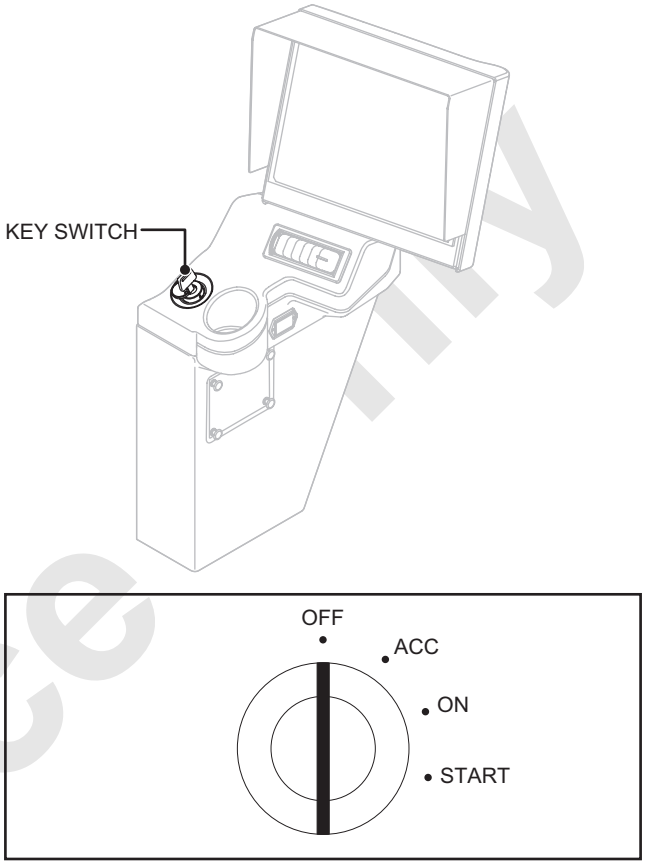

		J08E
Conditions		Normal
		–
Engine speed	At max. torque (rpm)	2,100
Engine loading ratio	Max. load ratio at limitation (%)	100

Reference only

2. Deteriorate the DEF/AdBlue® quality

The output limitation will be limited step by step as follows.
Replace with specified DEF/AdBlue® immediately.

- First time and at 40 hours elapsed after normal return

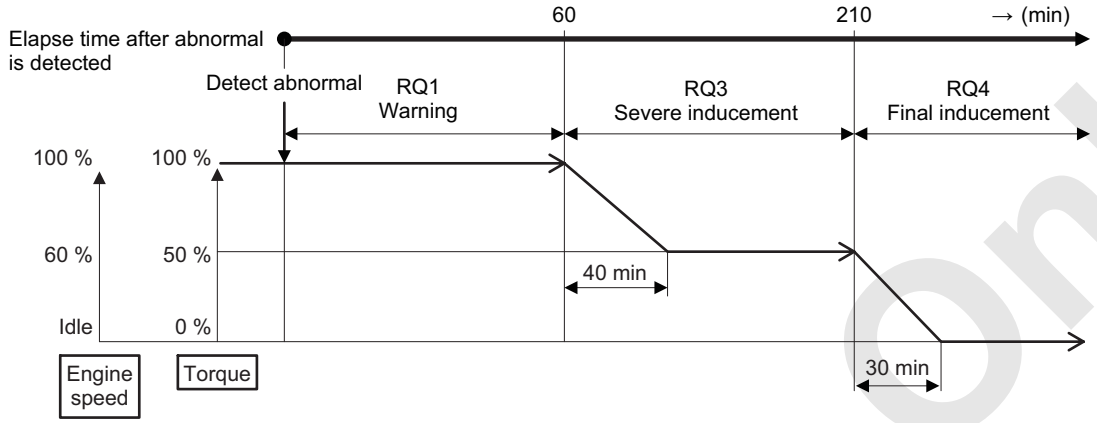

- Redetect within 40 hours elapsed after normal return

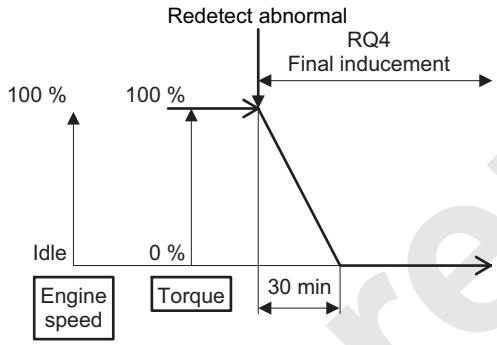

Reference Only

(1) Deteriorate the DEF/AdBlue® quality
(The method of release when display RQ1 on the monitor)

When warning is displayed, follow the instruction below in order.

(A) Turn the key switch to OFF position.
(B) Drain the DEF/AdBlue® from the tank and fill the specified DEF/AdBlue® 20 L (5.3 gal) or more.
(C) Turn the key to ON position and confirm if the warning has been released.
(Require to release the warning approx. 5 to 10 minutes)
If in case the warning is still existed, confirm the residual DEF/AdBlue® is more than 3 blocks and repeat the above steps (A) to (C).

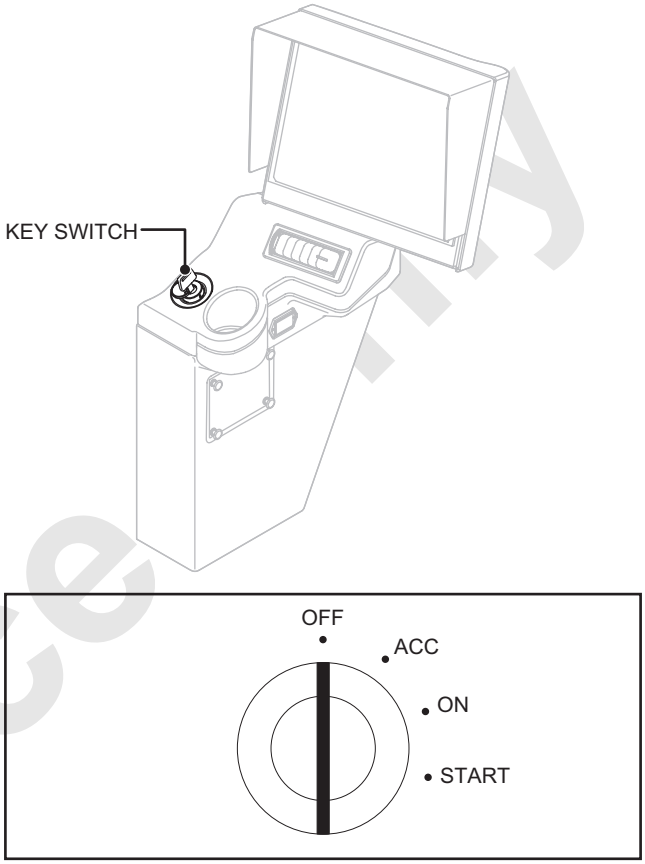

Reference only

(2) Deteriorate the DEF/AdBlue® quality
(The method of release when display RQ3 or RQ4 on the monitor)

When warning is displayed, follow the instruction below in order.

(A) Turn the key switch to OFF position.
(B) Drain the DEF/AdBlue® from the tank and fill the specified DEF/AdBlue® 20 L (5.3 gal) or more.
(C) Turn the key to ON position and confirm if the warning has been released.
(Require to release the warning approx. 5 to 10 minutes)
If in case the warning is still existed, confirm the residual DEF/AdBlue® is more than 3 blocks and repeat the above steps (A) to (C).
(D) Turn the key switch to OFF position again.
(E) Confirm the acceleration grip is in low idle and control levers are in neutral position.
If in case of the G engine mode is selected, change to power mode.
(As for the G engine mode, refer to the article 2 “HOOK HOISTING / LOWERING OPERATION” of the operator’s manual.)
(F) Start the engine and confirm if the engine speed limit has been released.
(Turn the acceleration grip and the engine speed correspond with the grip.)
(G) If no warning is issued and the engine output limitation is released at step (F), normal returned already.
If in case the engine output is not released, turn the key switch to OFF position once, repeat the steps (E) and (F).

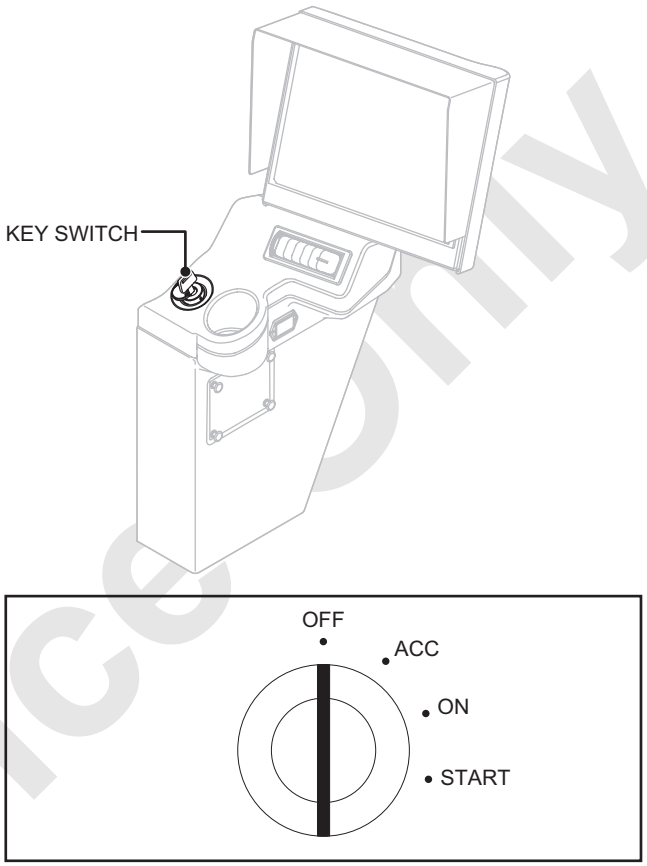

		J08E
Conditions		Normal
		–
Engine speed	At max. torque (rpm)	2,100
Engine loading ratio	Max. load ratio at limitation (%)	100

Reference Only

3. SCR system parts failure

The output limitation will be limited step by step as follows.
Contact authorized Manitowoc distributor immediately for repair.

- First time and at 40 hours elapsed after normal return

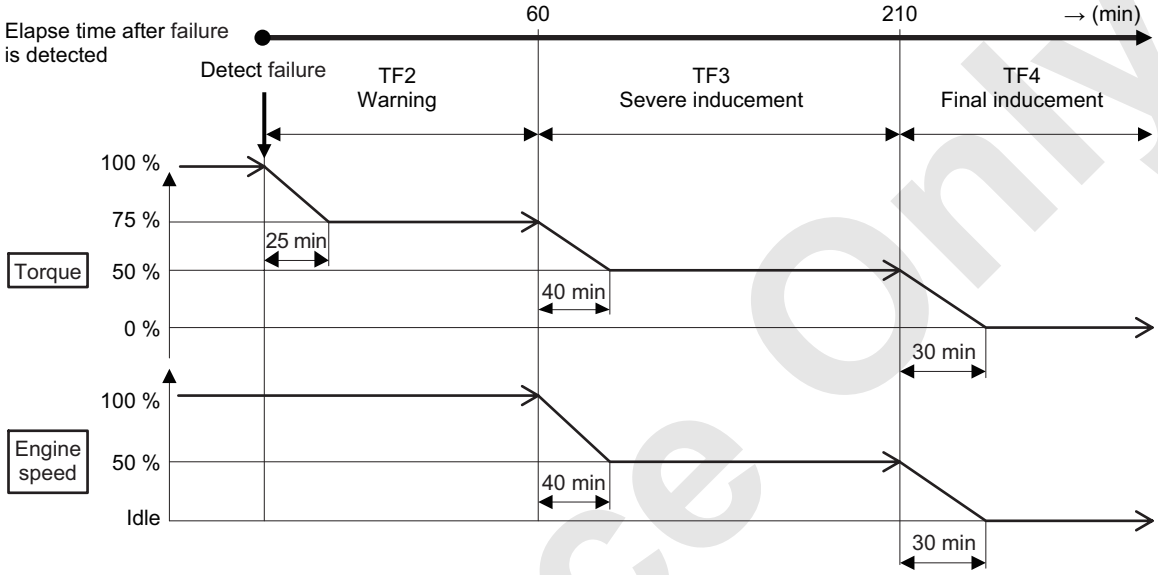

- Redetect within 40 hours elapsed after normal return

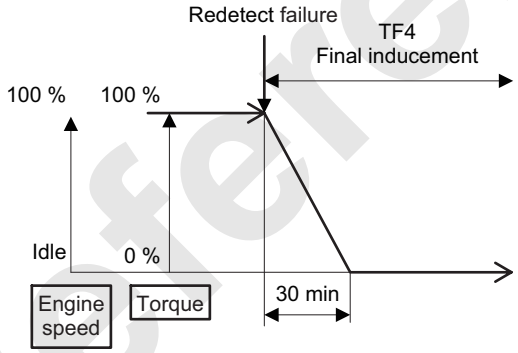

Reference Only

(1) SCR system parts failure
(The method of release when display TF2, TF3 or TF4 on the monitor)

When warning is displayed, follow the instruction below in order.

(A) Turn the key switch to OFF position.
(B) Specify the failure location and repair it.
(C) Turn the key to ON position and confirm if the warning has been released.
(D) Turn the key switch to OFF position again.
(E) Confirm the acceleration grip is in low idle and control levers are in neutral position.
If in case of the G engine mode is selected, change to power mode.
(As for the G engine mode, refer to the article 2 “HOOK HOISTING / LOWERING OPERATION” of the operator’s manual.)
(F) Start the engine and confirm if the engine speed limit has been released.
(Turn the acceleration grip and the engine speed correspond with the grip.)
(G) If no warning is issued and the engine output limitation is released at step (F), normal returned already.
If in case the engine output is not released, turn the key switch to OFF position once, repeat the steps (E) and (F).

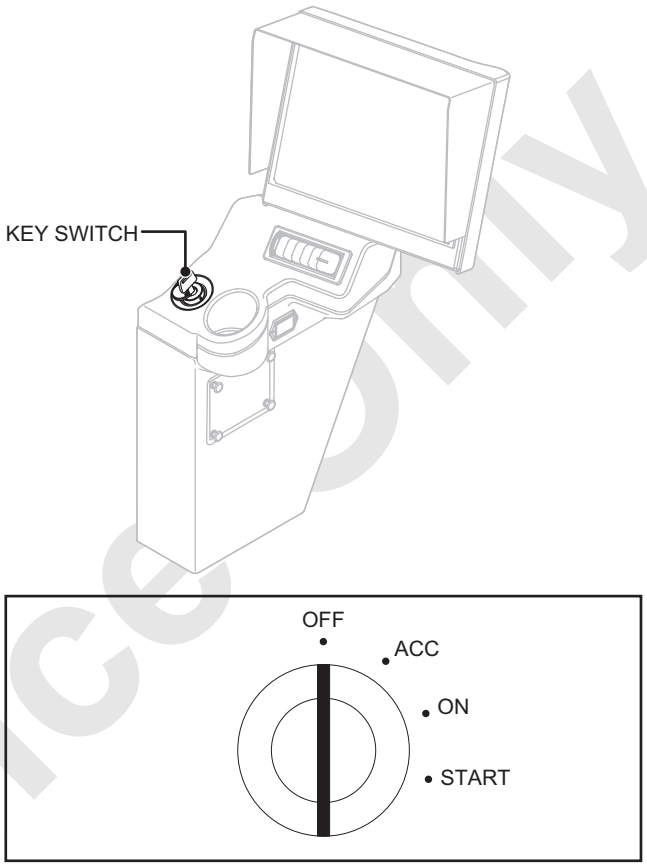

		J08E
Conditions		Normal
		–
Engine speed	At max. torque (rpm)	2,100
Engine loading ratio	Max. load ratio at limitation (%)	100

Reference Only

(2) SCR system parts failure
(Method of release with DST-i)

When the following P codes are displayed on the monitor with reaching the TF4 condition, refer to the engine workshop manual.

	SAE code	Function
P code (ECU side)	P0106	Boost pressure sensor - rationality
	P0401	EGR low flow
	P0101	Air flow sensor - rationality
	P204F	Reductant system performance
	P0096	Intake air temperature sensor (intake manifold) - rationality
P code (DCU side)	P203B	DEF/AdBlue® tank level sensor failure
	P2201	SCR upstream NOx sensor - Performance and Monitoring capability
	P2214	SCR downstream NOx sensor - Performance and Monitoring capability
	P2483	SCR upstream temperature sensor - rationality
	P204B	Abnormal DEF/AdBlue® pressure sensor
	P0667	Abnormal temperature sensor of the dosing control unit
	P2047	DEF/AdBlue® injector failure
	P20F4	DEF/AdBlue® consumption failure
	P208B	Abnormal DEF/AdBlue® pump motor
	P20E8	Abnormal DEF/AdBlue® piping pressure (Low)
	P20E9	Abnormal DEF/AdBlue® piping pressure (High)

Reference Only

4. Inducement final limitation recovery mode

Under the final limitation, the crane operation is not possible.

Display following warning and enter to the final limitation and “FINAL LIMIT RECOVERY ICON” is pop up.
When press this icon, the crane can be able to operate temporally for evacuation purpose.

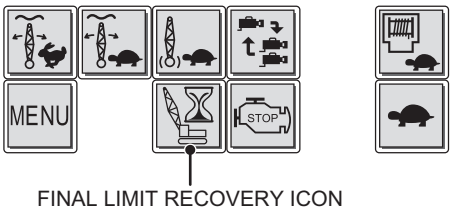

Residual quantity final limit (RL4)	DEF/AdBlue® bar gauge 0 block
Quality final limit (RQ4)	210 minutes after quality abnormal detect
SCR system parts final limit (TF4)	210 minutes after SCR parts failure detect

CAUTION

- **The final limit recovery icon use only at the evacuation purpose.**
- **The crane can be able to operate temporally but the motion is very slow.**
- **The crane operation may be difficult depending on the work load.**
- **There is a possibility of stalling the engine at evacuation when perform the combined controls.**

WARNING

- **Under the final limitation, the crane operation is not possible.**
  Before entering to the final limitation, contact authorized Manitowoc distributor.
- **There is a possibility of not restating the engine if stop the engine under the final limitation.**

WARNING

- **If operated the machine continuously with the warning of inducement control indicated may result in the engine or related component damage.**
- **Perform the action to normal return as soon as possible after evacuation.**

Reference Only

5. HYDRAULIC SYSTEM

5.1 LOCATION OF MAIN HYDRAULIC COMPONENTS 5-2
5.1.1 COMPONENTS LOCATION ON THE HYDRAULIC SCHEMATIC 5-2
5.1.2 HYDRAULIC COMPONENTS LIST 5-7
5.1.3 LAYOUT OF HYDRAULIC COMPONENTS 5-11
5.2 CONSTRUCTION AND FUNCTION 5-18
5.2.1 OIL FLOW FROM No.1 AND No.2 PUMPS 5-18
5.2.2 OIL FLOW FROM No.3 PUMP 5-20
5.2.3 OIL FLOW FROM No.4 AND No.5 PUMPS (FRONT, REAR DRUM BRAKE COOLING) 5-22
5.2.4 OIL FLOW FROM No.6 PUMP 5-24
5.2.5 OIL FLOW FROM No.7 PUMP 5-28
5.3 VALVE 5-36

Reference Only

Reference Only

5. HYDRAULIC SYSTEM

This chapter provides a general outline of the overall hydraulic system.

The pressurized oil in this circuit is supplied by the 3 variable displacement pumps driven with the power divider directly connected to the engine and 2 section gear pumps connected to them.
2 pumps (2 section) out of these 3 variable displacement pumps are for front drum, rear drum, boom drum and travel and one other pump is for swing.
Inner side pump out of 2 section gear pumps directly connected to the swing pump is for control purpose and outer side one is for auxiliary units such as gantry cylinder, crawler extending and other optional circuit.
2 gear pumps directly connected with power divider are for front and rear drum brake cooling.

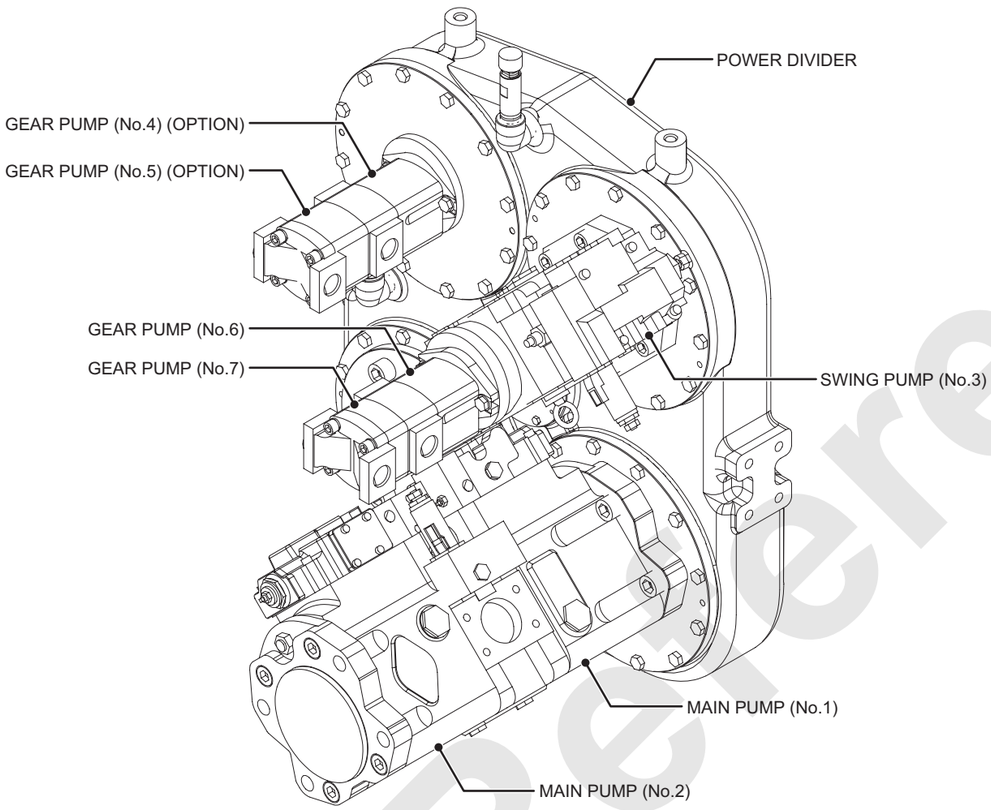

Reference Only

5.1 LOCATION OF MAIN HYDRAULIC COMPONENTS

5.1.1 COMPONENTS LOCATION ON THE HYDRAULIC SCHEMATIC

WITHOUT FREE FALL

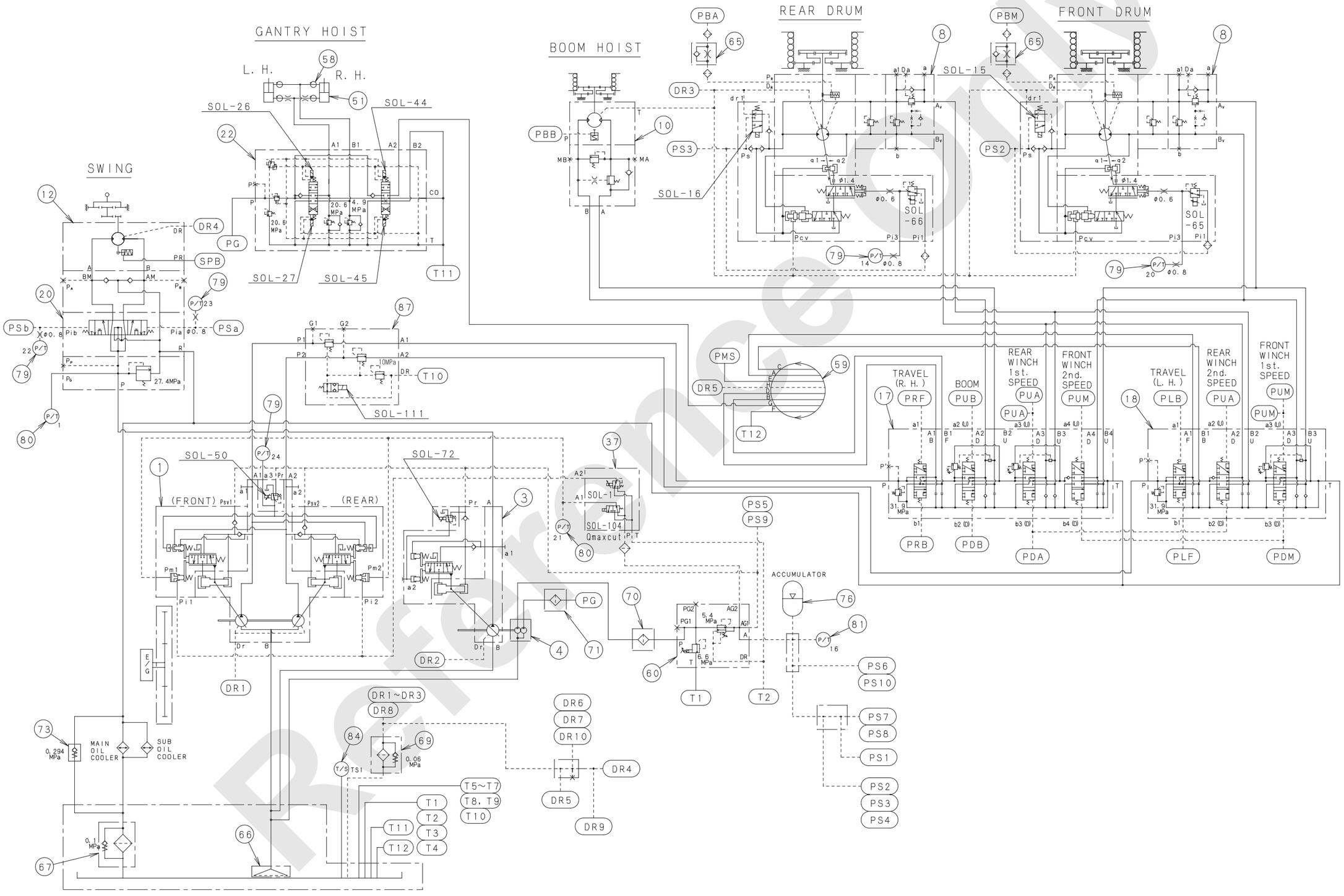

Reference Only

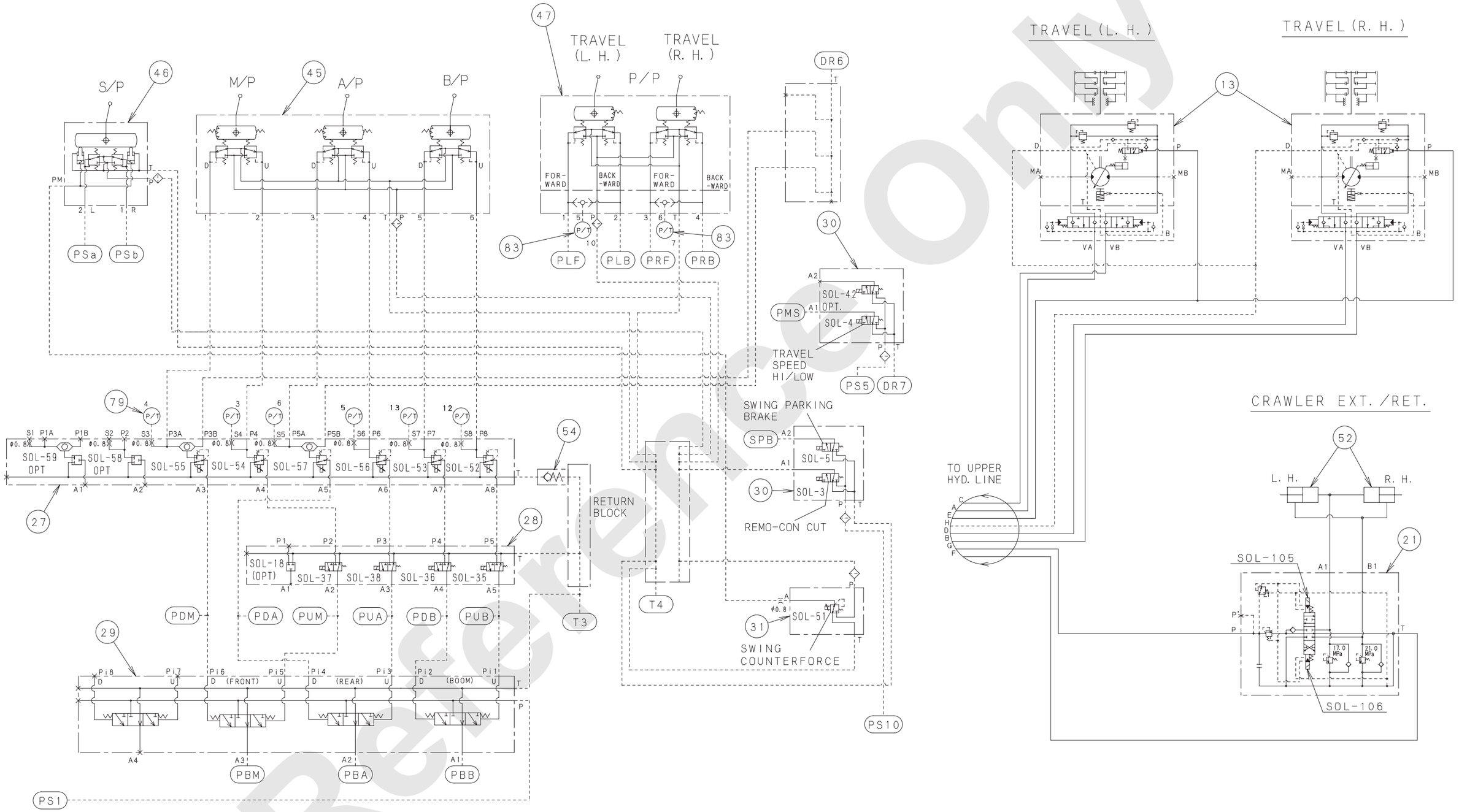

Reference only

WITH FREE FALL

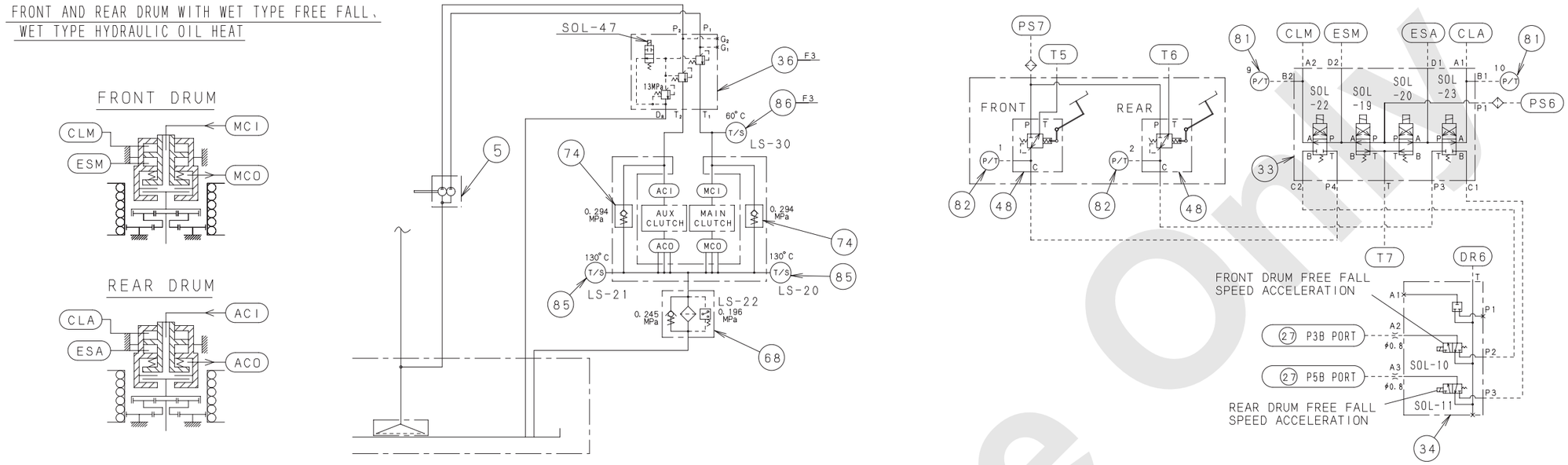

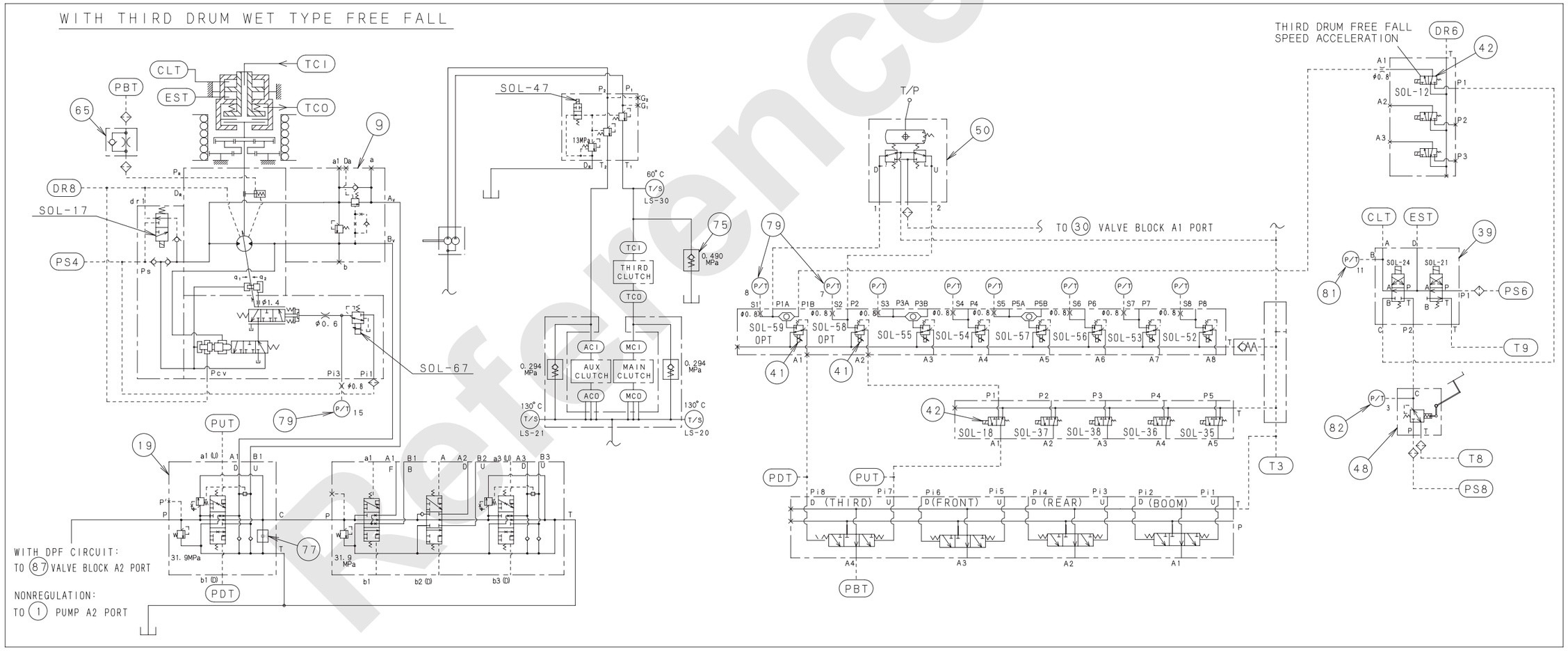

Reference Only

10000A-1

COUNTERWEIGHT SELF REMOVAL

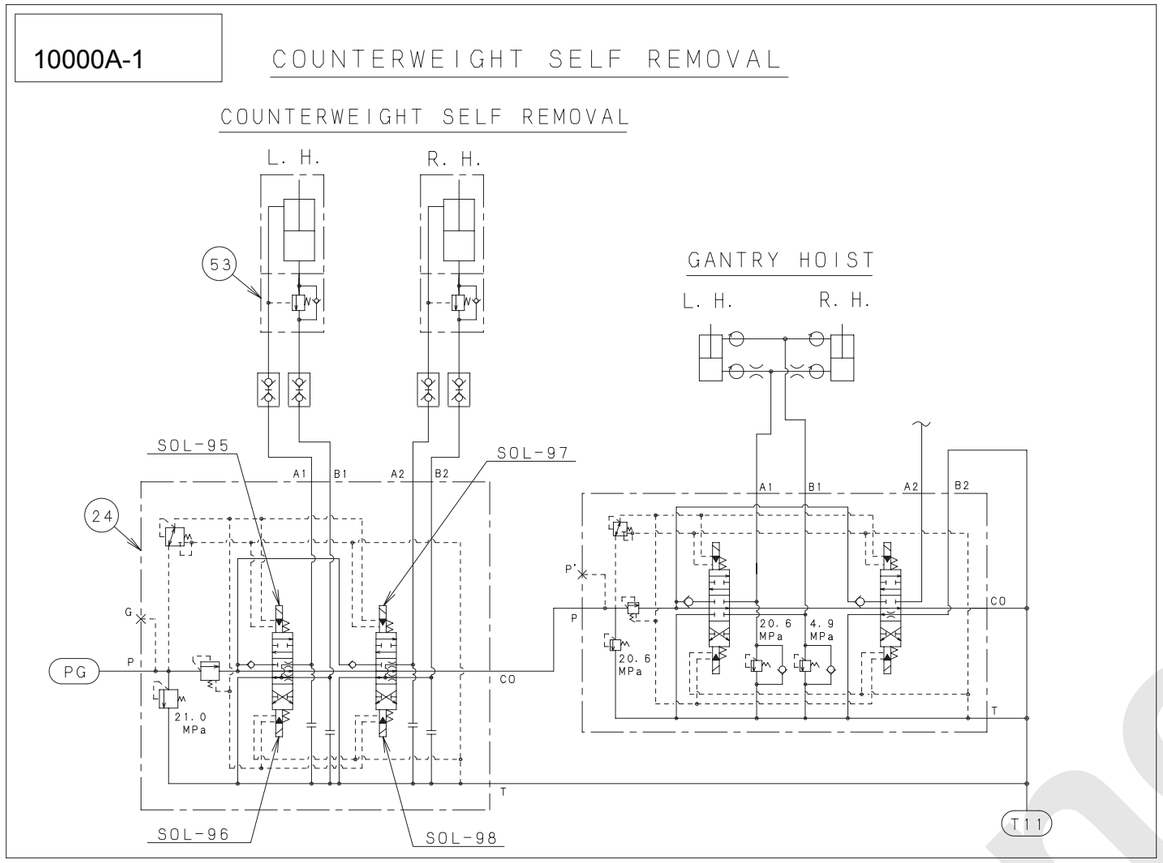

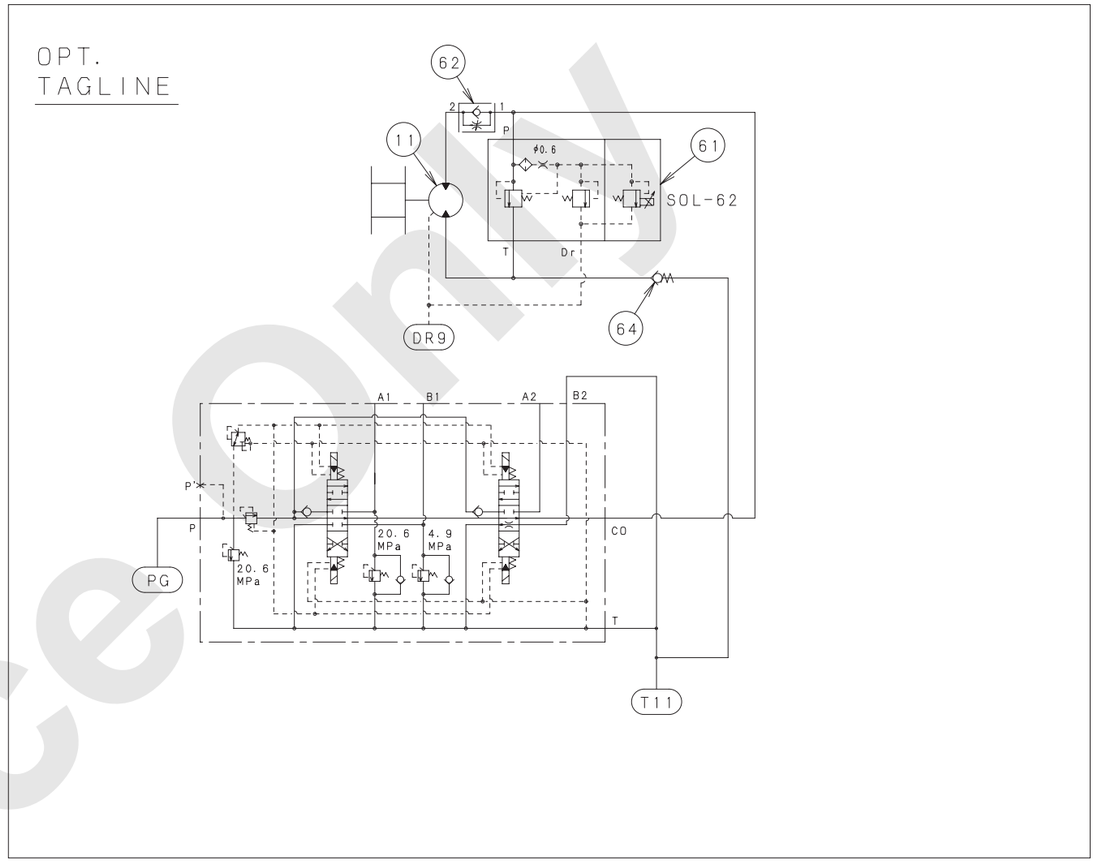

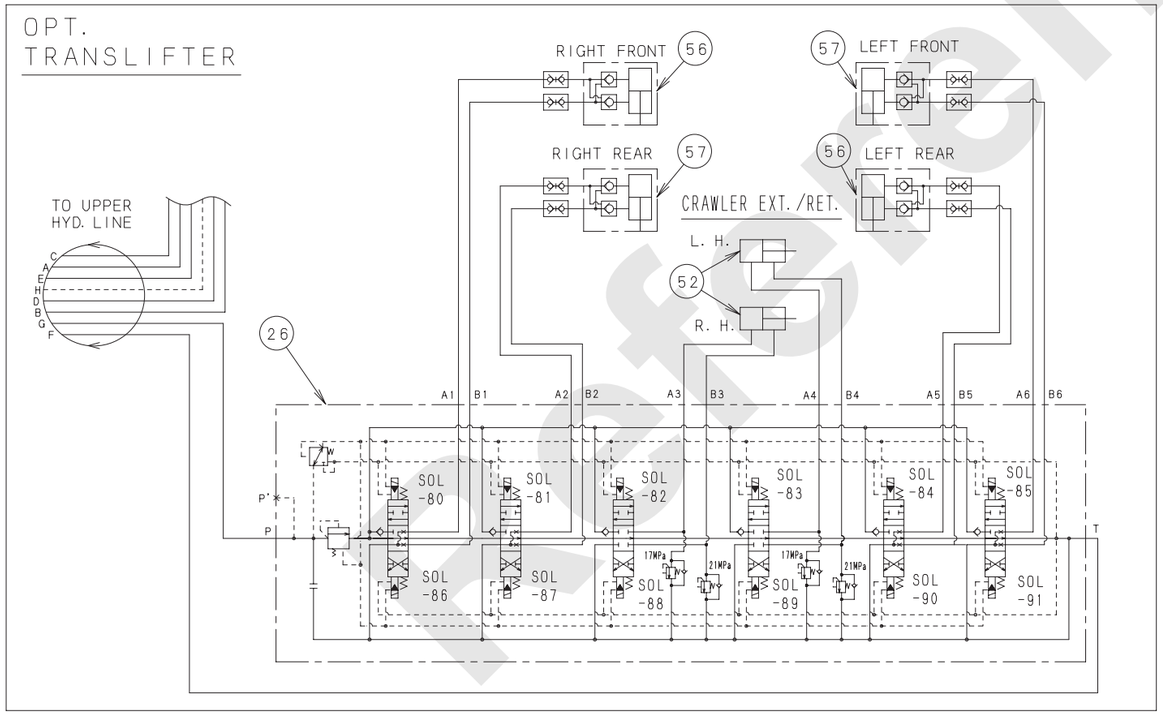

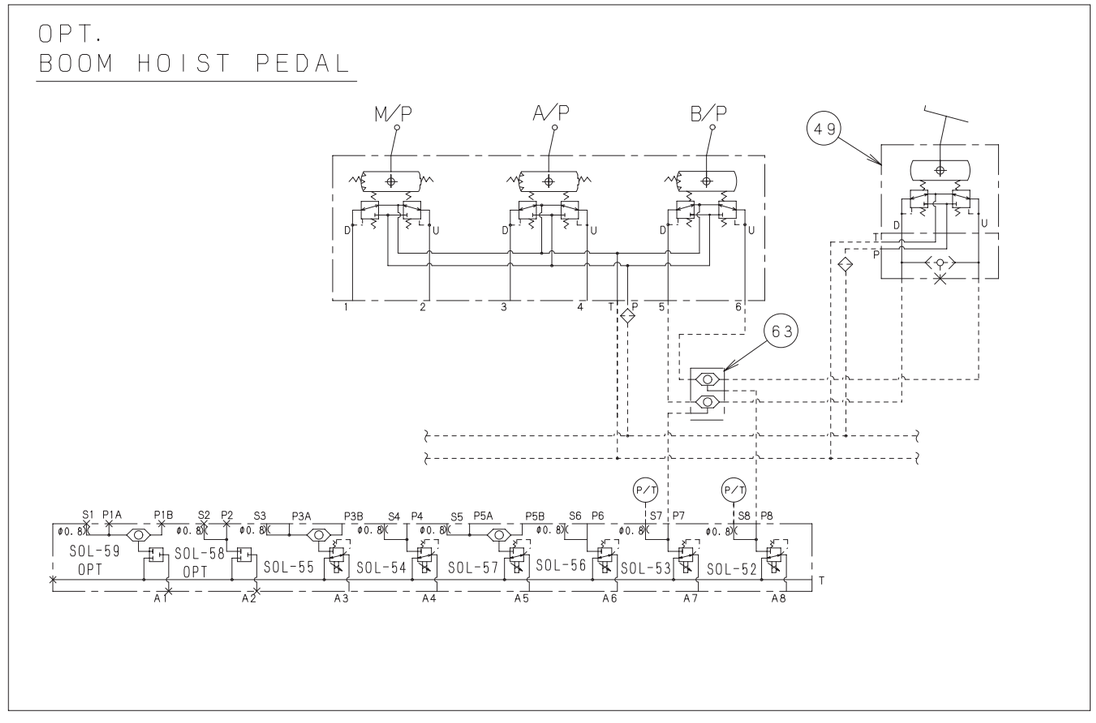

Reference Only

OPT.
BRAKE, SWING ANGLE LIMIT

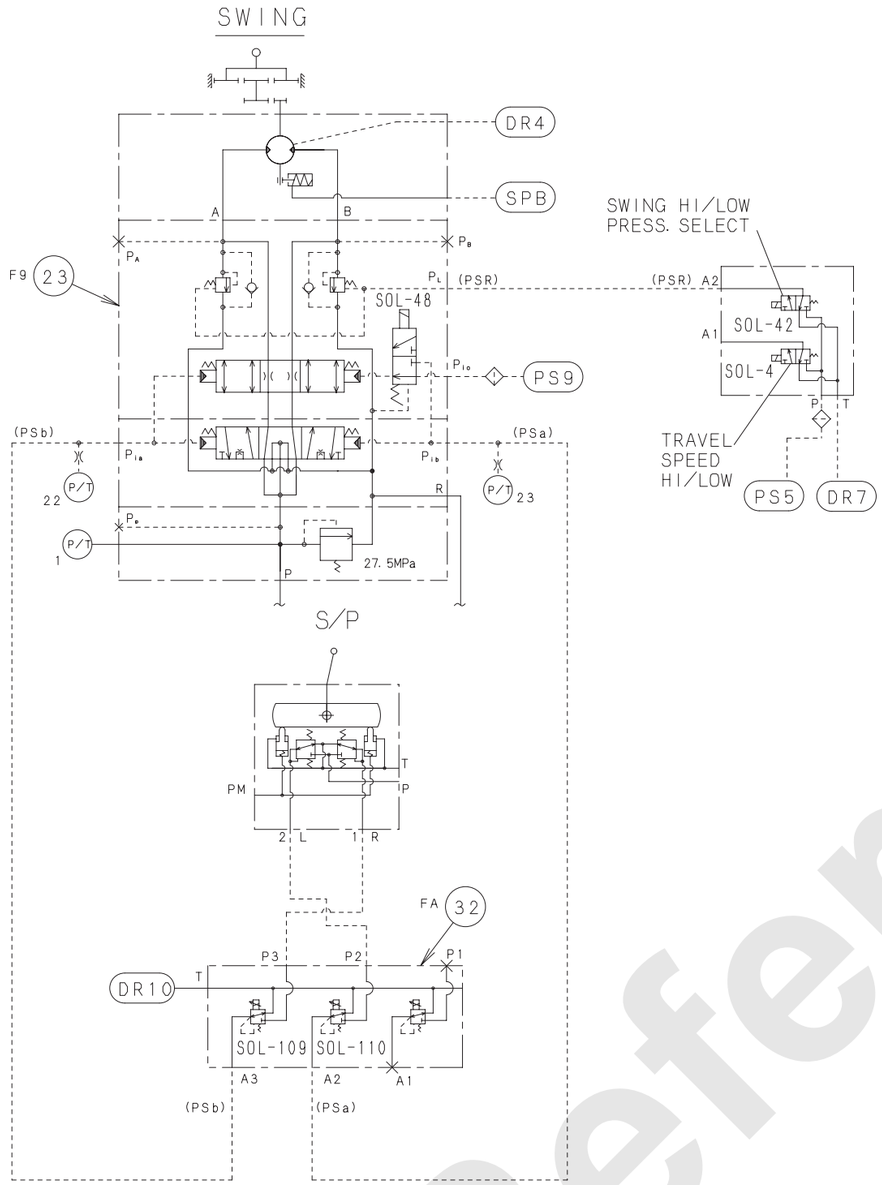

OPT.
CRAWLER SELF REMOVAL

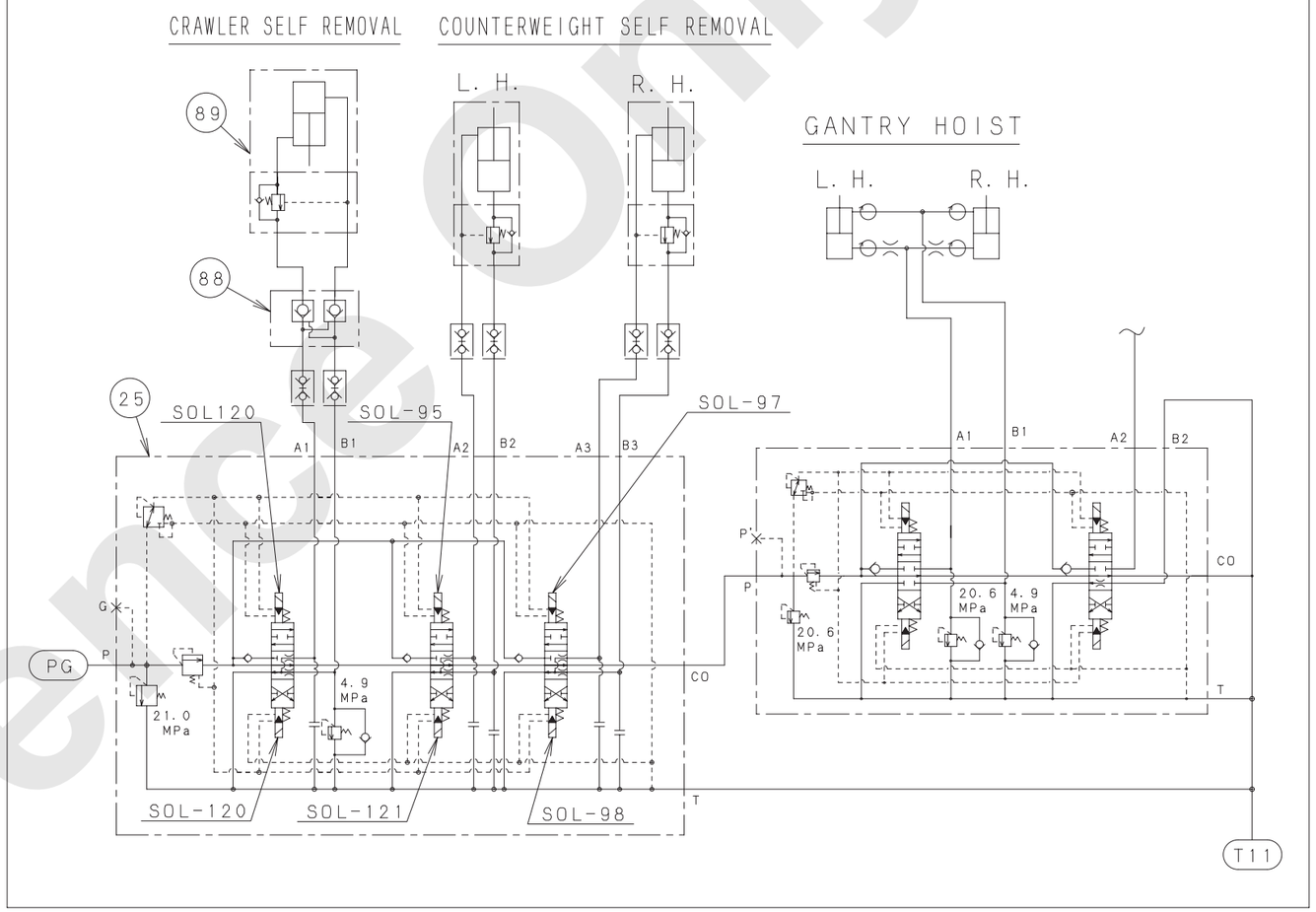

Reference Only

5.1.2 HYDRAULIC COMPONENTS LIST

Name of component	Use for	Specification
1. Main pump (No.1)	• Front, rear drum • Third drum (option) • Boom drum • Travel	Swash plate type, variable displacement Max. delivery : 255 L/min (67.4 gal/min) Max. working press. : 31.9 MPa (4,627 psi)
1. Main pump (No.2)		
3. Swing pump (No.3)	• Swing	Swash plate type, variable displacement Max. delivery : 177 L/min (46.8 gal/min) Max. working press. : 27.5 MPa (3,989 psi)
4. Gear pump (No.6)	• Control	Max. delivery : 61 L/min (16.1 gal/min) Max. working press. : 7.0 MPa (1,015 psi)
4. Gear pump (No.7)	• Gantry • Crawler • Tagline (option)	Max. delivery : 40 L/min (10.6 gal/min) Max. working press. : 20.6 MPa (2,988 psi)
5. Gear pump (No.4) (option)	• Front, rear drum brake cooling	Max. delivery : 73 L/min (19.3 gal/min) Max. working press. : 1.0 MPa (145 psi)
5. Gear pump (No.5) (option)		
8. Motor	• Front, rear drum	Swash plate type, variable displacement Max. delivery : 255 L/min (67.4 gal/min) Max. working press. : 31.9 MPa (4,627 psi)
9. Motor (option)	• Third drum (option)	
10. Motor	• Boom	Bent axis type, fixed displacement Max. delivery : 255 L/min (67.4 gal/min) Max. working press. : 31.9 MPa (4,627 psi)
11. Motor (option)	• Tagline (option)	Max. delivery : 40 L/min (10.6 gal/min) Relief press. : 13.7 Mpa (1,987 psi)
12. Motor	• Swing	Swash plate type, variable displacement Max. delivery : 177 L/min (46.8 gal/min) Max. working press. : 27.5 MPa (3,989 psi)
13. Motor	• Travel	Swash plate type, 2 speed motor Max. delivery : 255 L/min (67.4 gal/min) Max. working press. : 31.9 MPa (4,627 psi)
17. Control valve	• Travel R.H. • Boom drum • Main2, aux.1	Max. delivery : 255 L/min (67.4 gal/min) Max. working press. : 31.9 MPa (4,627 psi)
18. Control valve	• Travel L.H. • Main1, aux.2	Max. delivery : 255 L/min (67.4 gal/min) Max. working press. : 31.9 MPa (4,627 psi)
19. Control valve (option)	• Third drum (option)	Max. delivery : 255 L/min (67.4 gal/min) Max. working press. : 31.9 MPa (4,627 psi)
20. Control valve	• Swing	Max. working press. : 27.5 MPa (3,989 psi)
21. Control valve	• Crawler ext. / ret.	Crawler extending Press. push : 17.0 MPa (2,466 psi) Press. pull : 21.0 Mpa (4,627 psi)
22. Control valve	• Gantry	Set press. : 20.6 MPa / 4.9 Mpa (2,988 psi / 711 psi)
23. Control valve (option)	• Swing free / brake	Max. working press. : 27.5 MPa (3,989 psi)
24. Control valve	• Counterweight self removal	Max. delivery : 40 L/min (10.6 gal/min) Max. working press. : 21.0 MPa (3,046 psi)

Reference Only

Name of component	Use for	Specification
25. Control valve 10000A-1	• Crawler self removal • Counterweight self removal	Set press. : 21.0 / 4.9 MPa (3,046 / 711 psi)
26. Control valve (option)	• Translifter • Crawler ext. / ret.	Set press. : 17.0 / 21.0 MPa (2,466 / 3,046 psi)
27. Valve block (8-section)	• Automatic stop and speed control	• Front drum hoist remote control pressure • Front drum lowering remote control pressure • Rear drum hoist remote control pressure • Rear drum lowering remote control pressure • Boom raise remote control pressure • Boom lowering remote control pressure • Third drum hoist remote control pressure (option) • Third drum lowering remote control pressure (option)
28. Valve block (5-section)	• Limit stop	• Boom raise stop • Boom lower stop • Rear drum hoist stop • Front drum lower stop • Third drum hoist stop (option)
29. Valve block (4-section)	• Motor brake	• Front drum motor parking brake • Rear drum motor parking brake • Boom drum motor parking brake • Third drum motor parking brake (option)
30. Valve block (2-section)	• Remo-con press. source cut etc	• Remo-con cut • Swing parking brake
		• Travel speed Hi / Low select • Swing Hi / Low pressure select
31. Valve block (1-section)	• Swing counterforce	• Swing counterforce
32. Valve block (3-section) (option)	• Sol prop valve	• Swing angle limit
33. Valve block (4-section)	• Wet type free fall	• Rear drum clutch • Rear drum emergency clutch • Front drum emergency clutch • Front drum clutch
34. Valve block (3-section)	• Wet type free fall speed acceleration	• Front drum free fall speed acceleration • Rear drum free fall speed acceleration
36. Valve block (option)	• For hyd. oil heat	• Hydraulic oil heat
37. Valve block (2-section)	• Feathering, Qmax cut	
39. Valve block (2-section) (option)	• Third wet type free fall	• Third drum clutch • Third drum emergency clutch engage
41. Solenoid valve (option)	• Third drum (option)	• Third drum automatic stop
42. Solenoid valve (option)	• Third drum (option)	• Third drum limit stop
45. Remote control valve	• Front, rear drum	Press. : 2.65 to 2.94 Mpa (384 to 426 psi)
	• Boom drum	Press. : 2.50 to 2.79 Mpa (363 to 405 psi)
46. Remote control valve	• Swing	Press. : 1.62 to 1.92 Mpa (235 to 278 psi)
47. Remote control valve	• Travel	Press. : 1.42 to 1.62 MPa (206 to 235 psi)

Reference Only

Name of component	Use for	Specification
48. Control valve (option)	• Brake	
49. Remote control valve (option)	• Boom drum control pedal	
50. Remote control valve (option)	• Third drum (option)	Press. : 2.65 to 2.94 Mpa (384 to 426 psi)
51. Cylinder	• Gantry hoist	Tube I.D : 75 mm dia. (2-15/16″ dia.) Rod O.D : 40 mm dia. (1-9/16″ dia.) Stroke : 304 mm (11-31/32″) Press. push : 20.6 MPa (2,988 psi) Press. pull : 4.9 Mpa (711 psi)
52. Cylinder	• Crawler ext. / ret.	Tube I.D : 150 mm dia. (5-29/32″ dia.) Rod O.D : 70 mm dia. (2-3/4″ dia.) Stroke : 1,111 mm (43-3/4″) Press. push : 17.0 MPa (2,466 psi) Press. pull : 21.0 Mpa (4,627 psi)
53. Cylinder 10000A-1	• Counterweight self removal	Tube I.D : 110 mm dia. (4-11/32″ dia.) Rod O.D : 85 mm dia. (3-11/32″ dia.) Stroke : 1,330 mm (52-3/8″)
54. Check valve		For valve block
56. Cylinder (option) 57. Cylinder (option)	• Translifter	Tube I.D : 115 mm dia. (4-17/32″ dia.) Rod O.D : 80 mm dia. (3-5/32″ dia.) Stroke : 700 mm (27-9/16″) Press. push : 20.6 MPa (2,988 psi) Press. pull : 20.6 Mpa (2,988 psi)
58. Swivel joint		
59. Swivel joint (8 port)		A, B, C, D : Travel E : Travel speed select F : Tank G : Crawler H : Drain
60. Relief valve / reducing valve	• Control	Relief press. : 7.0 Mpa (1.015 psi) Reducing sec. press. : 5.4 Mpa (783 psi)
61. Sol. prop relief valve (option)	• Tagline (option)	Mechanical relief press. setting : 14.7 Mpa (2,132 psi) Proportional relief press. setting : 13.7 MPa (1,987 psi) (at 0.25 Amp.)
62. Flow control valve (option)	• Tagline (option)	
63. Shuttle valve (option)		
64. Slow return check valve (option)	• Tagline (option)	
65. Slow return check valve	• Motor brake	0.8 mm dia. (0.032″ dia.)
66. Suction strainer		80 Mesh
67. Return filter		$\beta_{10} \geq 8$
68. Return filter (option)	• Wet type clutch	10 μm
69. Drain filter		10 μm
70. Line filter	• Control	100 Mesh (149 μm)
71. Line filter	• Aux. actuator	100 Mesh (149 μm)
73. Bypass check valve	• Oil cooler	0.294 MPa (43 psi)

Reference Only

Name of component	Use for	Specification
74. Bypass check valve (option)	• Front, rear drum brake cooling	0.294 MPa (43 psi)
75. Bypass check valve (option)	• Third drum (option)	0.490 MPa (71 psi)
76. Accumulator		N_2 Gas 2,900 cm^3
77. Plug (option)		
79. Pressure sensor	• Remo-con press. detect	3.0 MPa (435 psi)
80. Pressure sensor	• Swing	50.0 MPa (7,252 psi)
81. Pressure sensor	• Clutch	19.6 MPa (2,843 psi)
82. Pressure switch (option)	• Control	
83. Pressure switch	• Travel remo-con press. detect	
84. Hyd. oil temperature sensor	• Hyd. oil tank	
85. Hyd. oil temperature switch (option)		130 °C (266 °F)
86. Hyd. oil temperature switch (option)		60 °C (140 °F)
87. Valve block		DPF re-generation
88. Double pilot check valve (option)		
89. Cylinder (option)	• Crawler self removal	

Reference Only

5.1.3 LAYOUT OF HYDRAULIC COMPONENTS

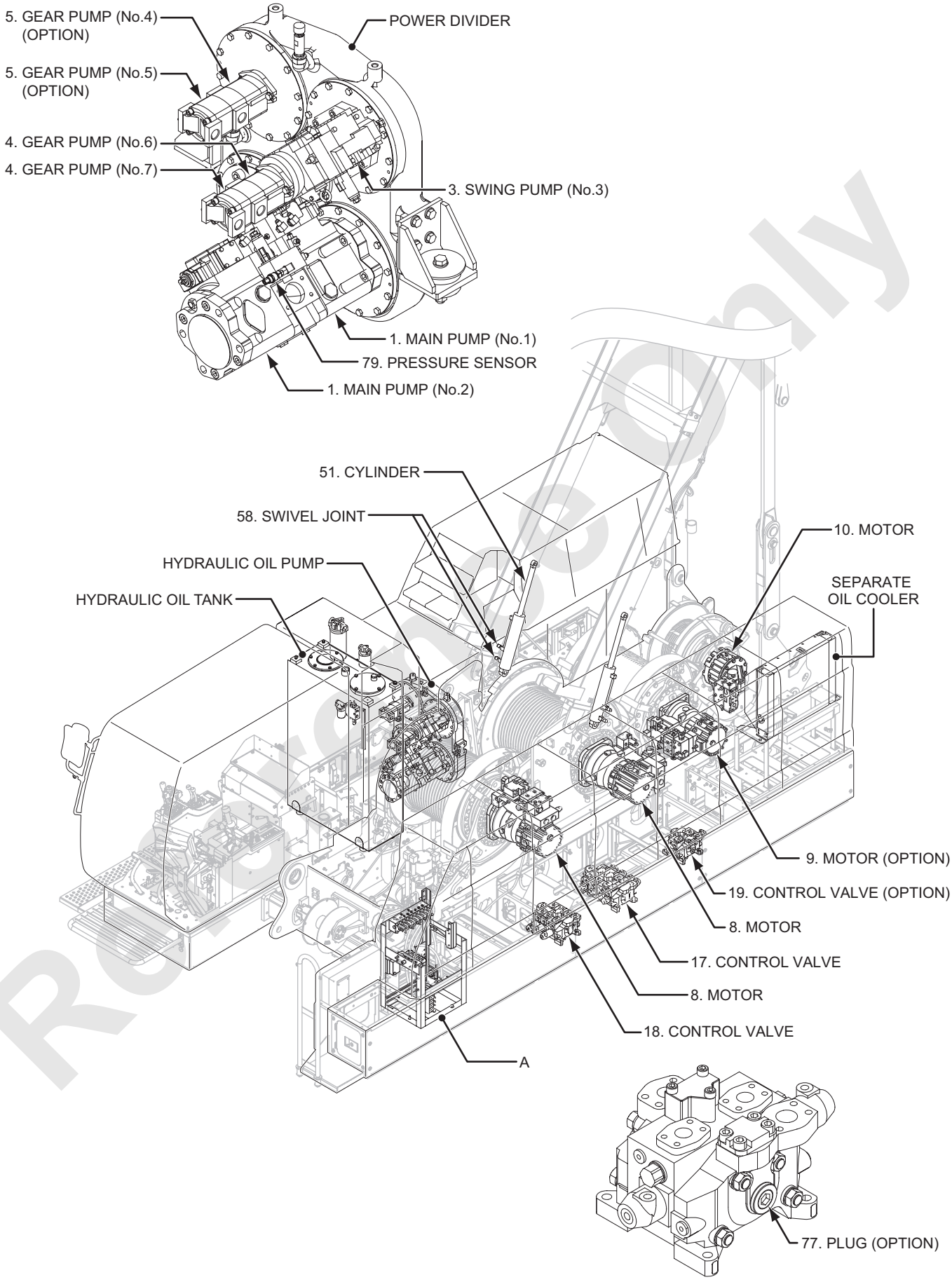

Reference Only

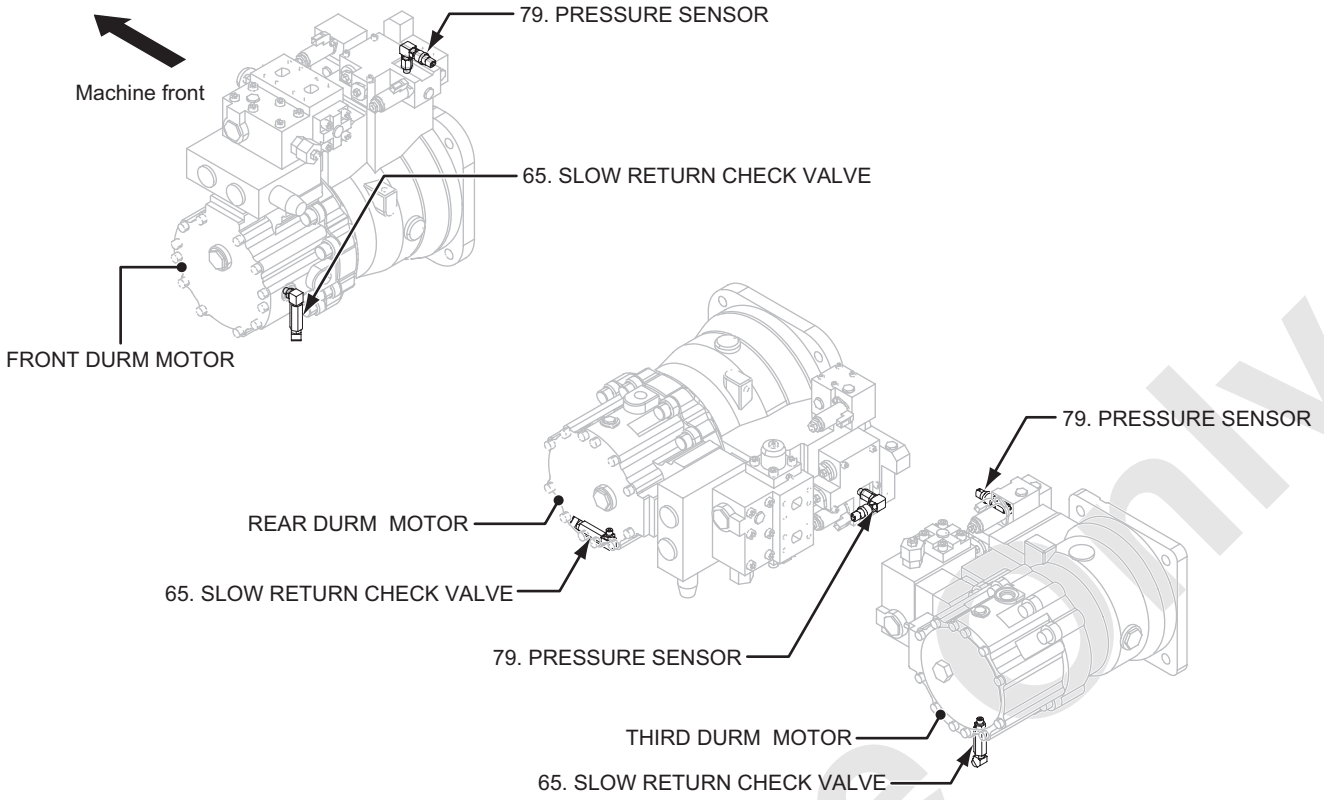

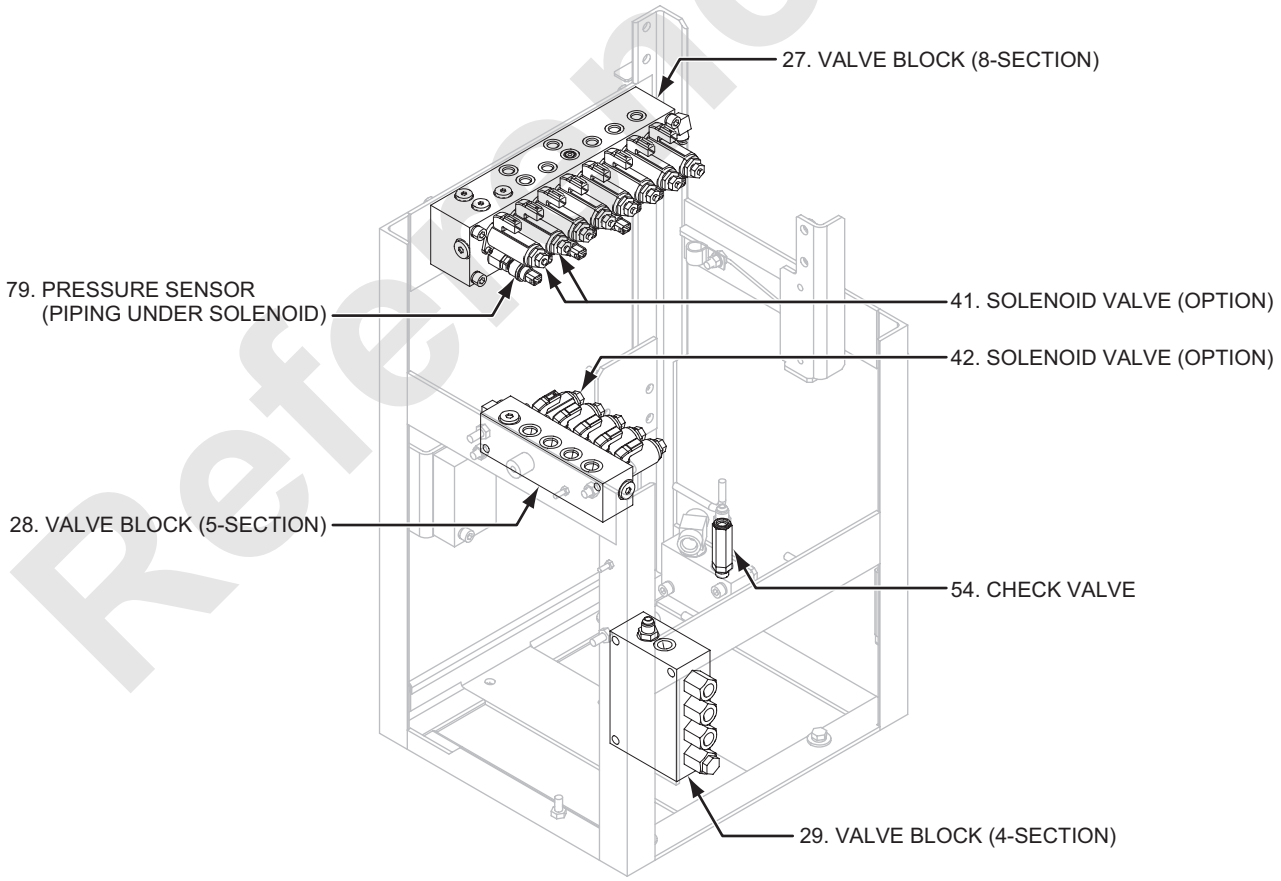

Detail A

Reference Only

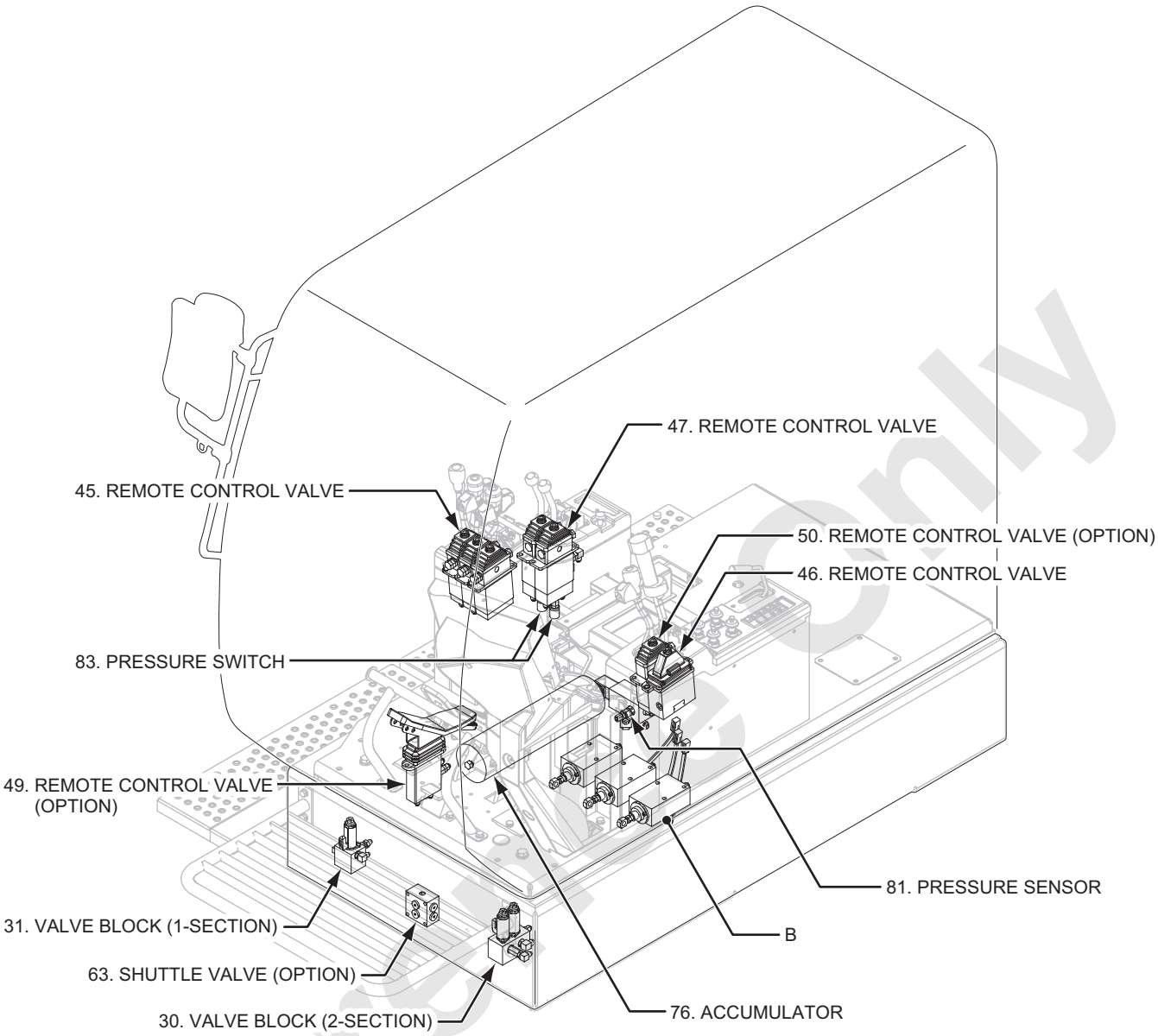

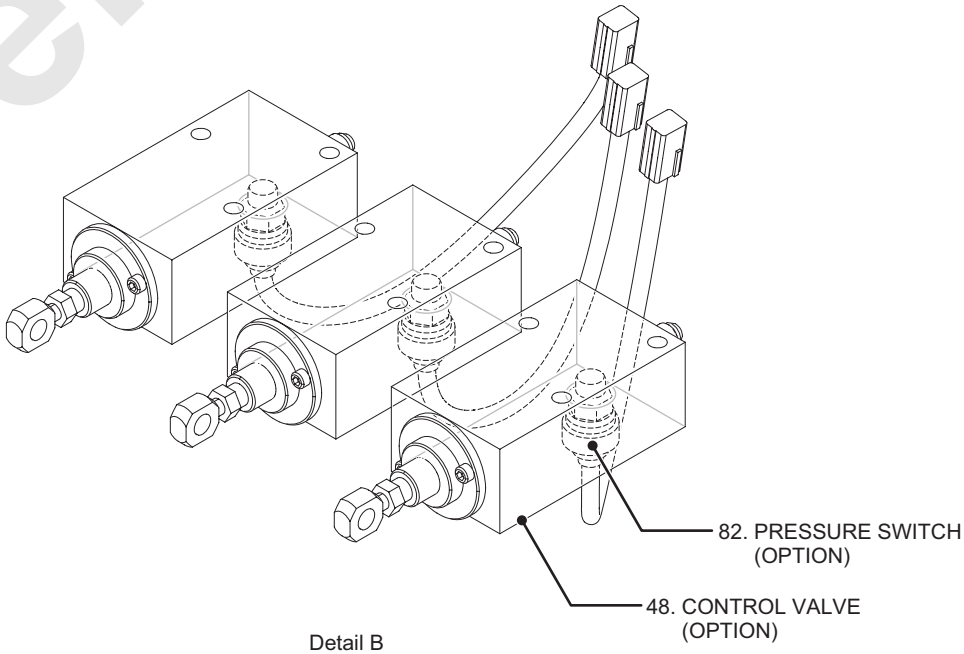

Detail B

Reference Only

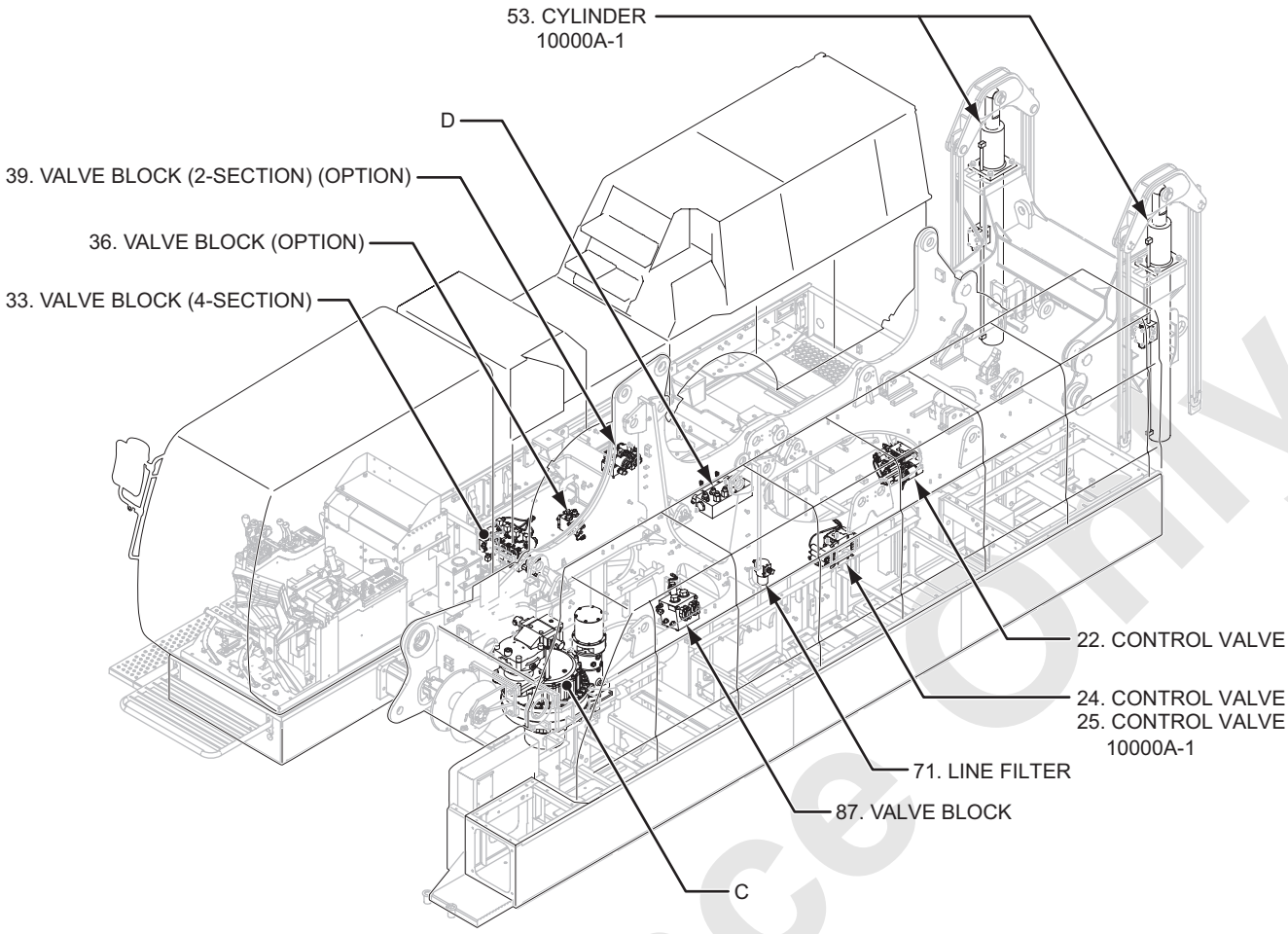

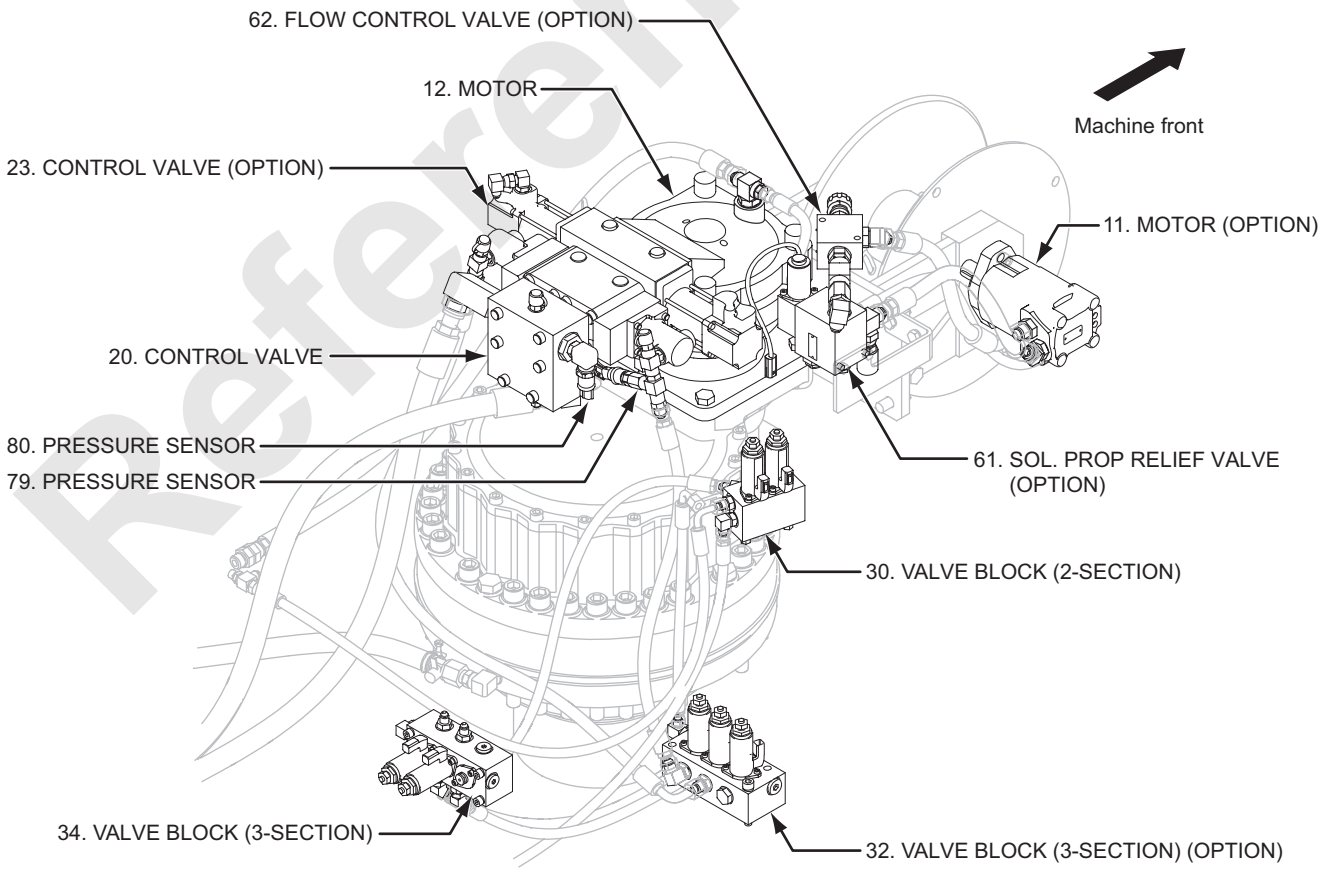

Detail C

Reference Only

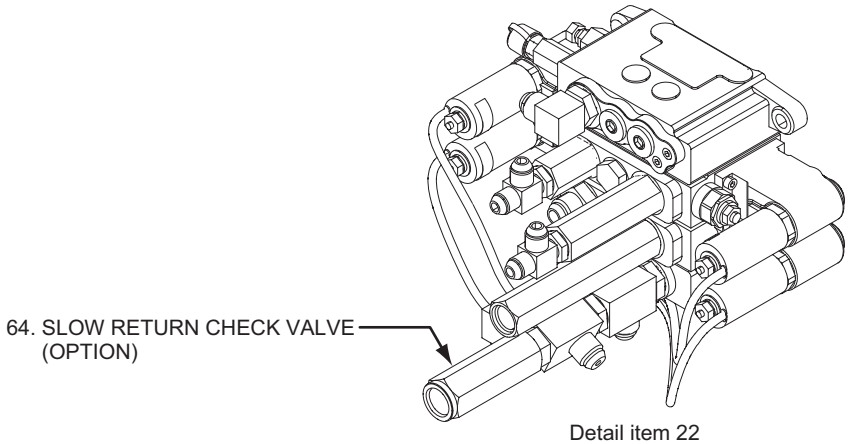

Detail item 22

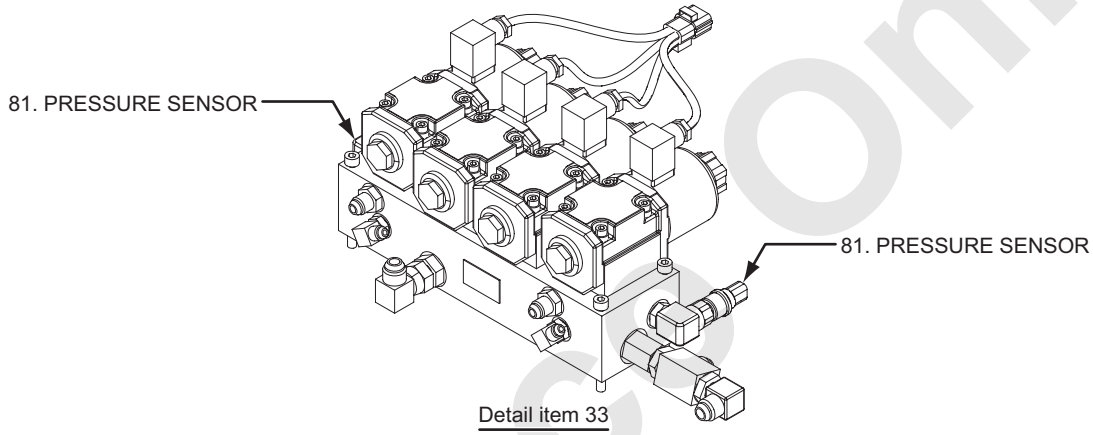

Detail item 33

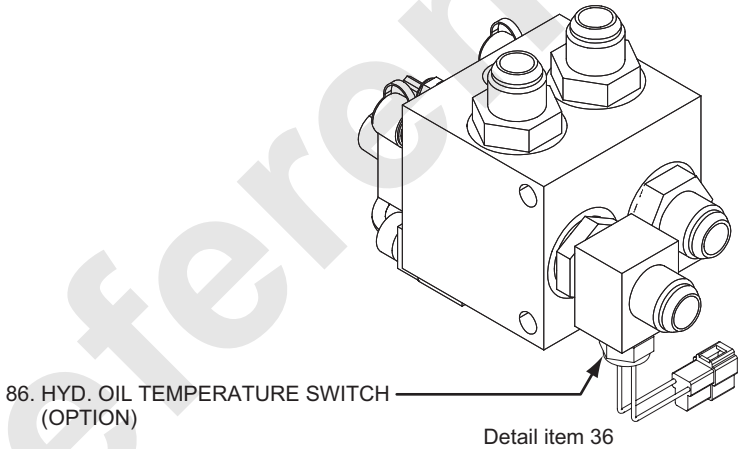

Detail item 36

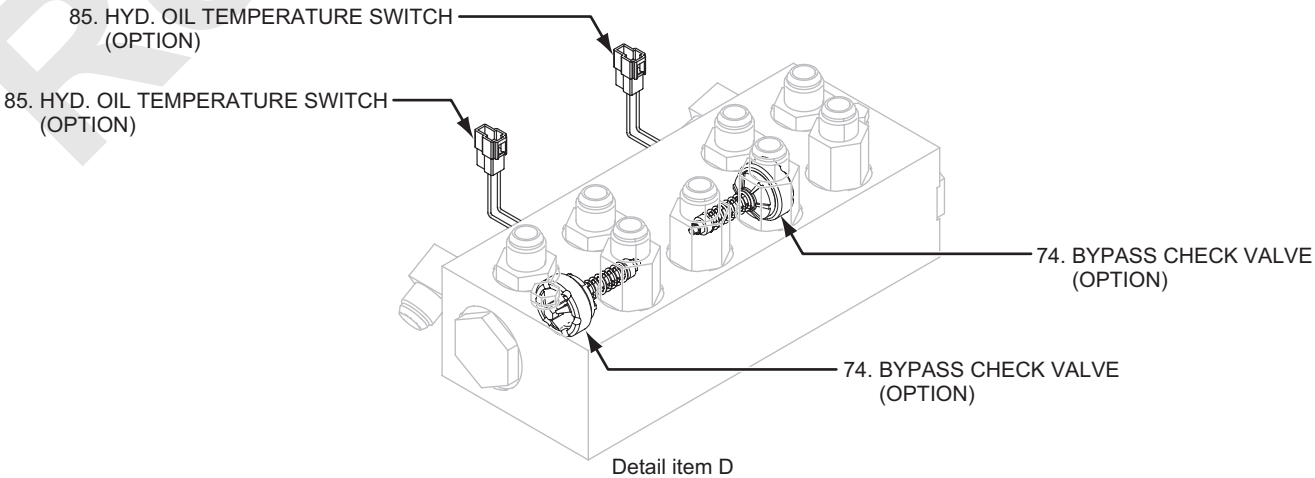

Detail item D

Reference Only

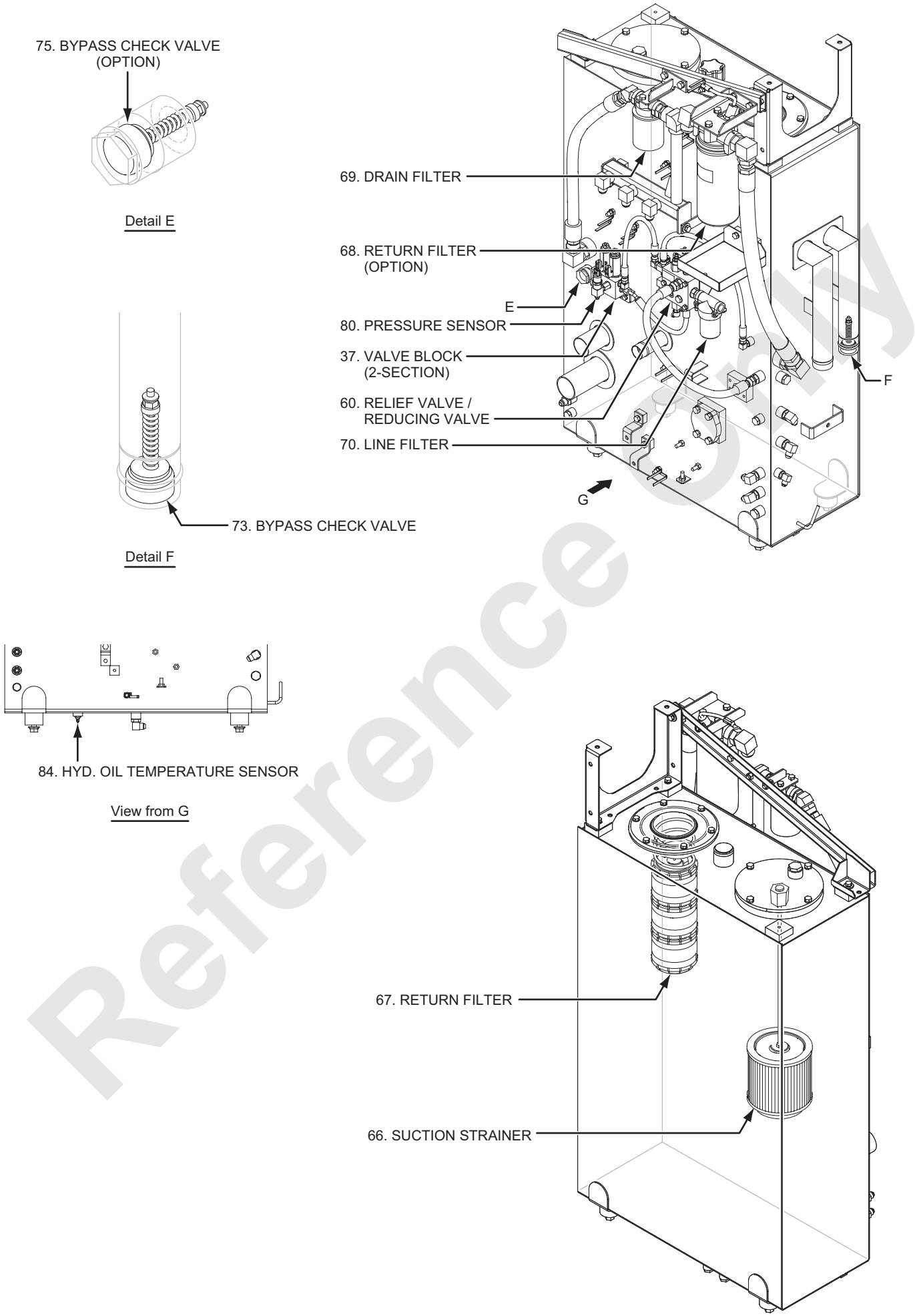

Reference Only

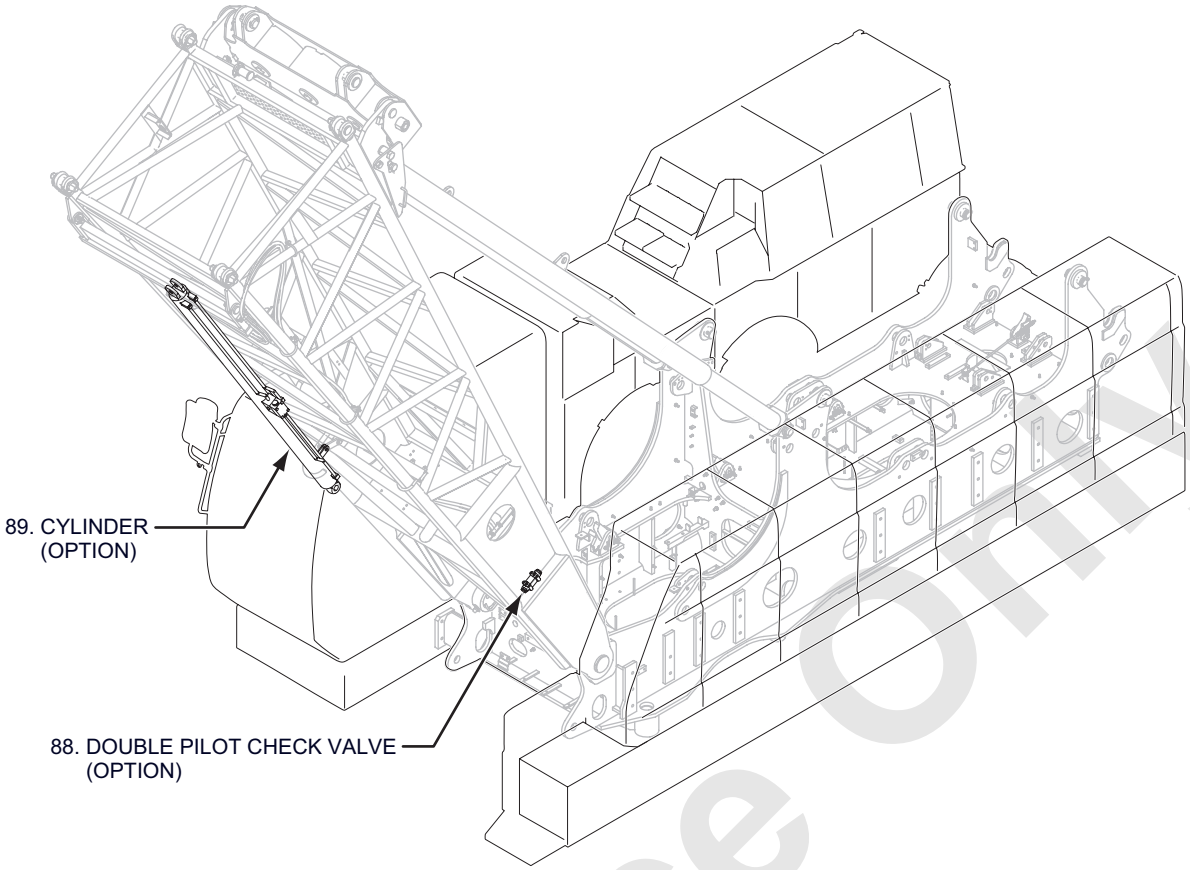

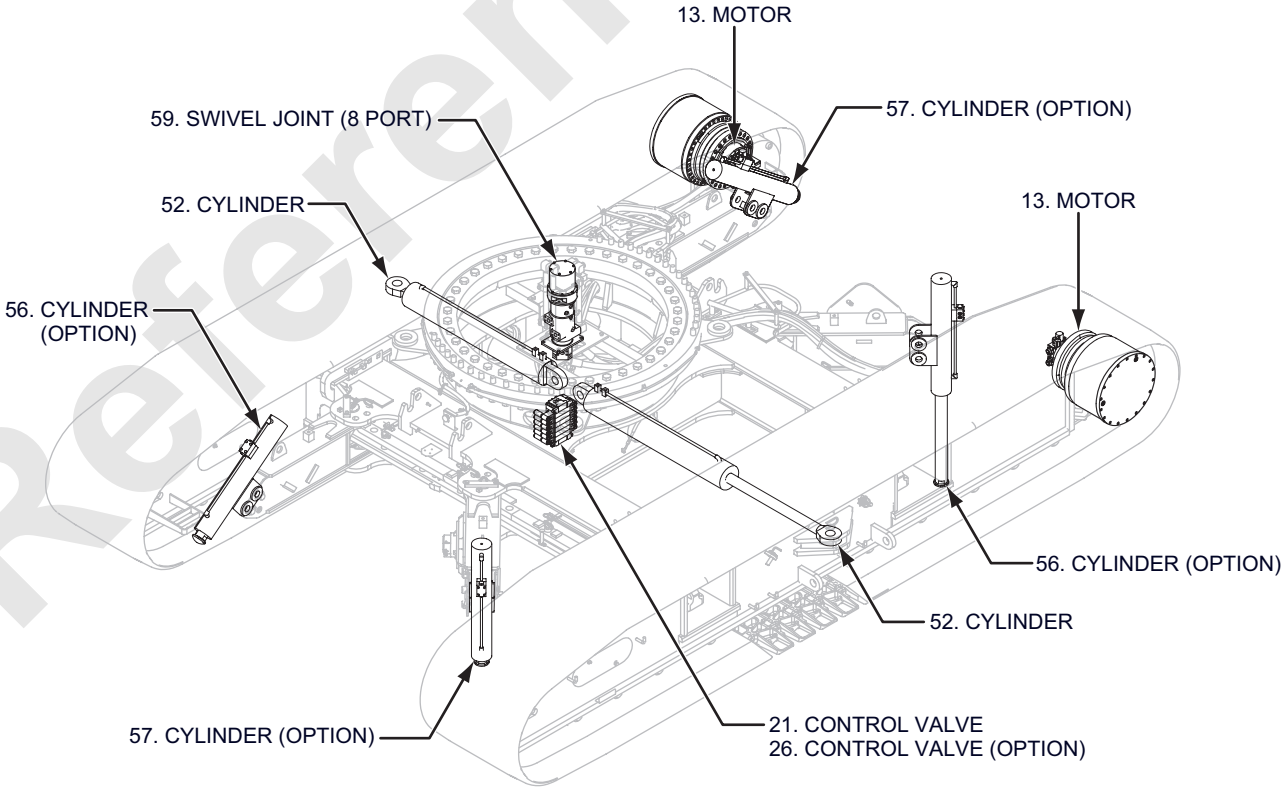

Reference Only

5.2 CONSTRUCTION AND FUNCTION

5.2.1 OIL FLOW FROM No.1 AND No.2 PUMPS

No.1 and No.2 pumps are main pumps and are tandem connected variable displacement double pumps.
At neutral, pressurized oil from No.1 pump flows into 4 section side control valve circuit (front / rear drum / right travel / boom).
At the same time, pressurized oil from No.2 pump flows into 3 section side control valve circuit (front / rear drum / left travel) and passes through each control valve and return to the oil tank without load.
When any of control valve spools is moved by pressurized control oil from the remote control valve, pressurized main pump oil is led to each actuator.
When the inching speed switch is handled, inching speed solenoid becomes energized to actuate the pump regulator and minimize oil delivery from the main pump.

Reference Only

OIL FLOW FROM No.1 AND No.2 PUMPS

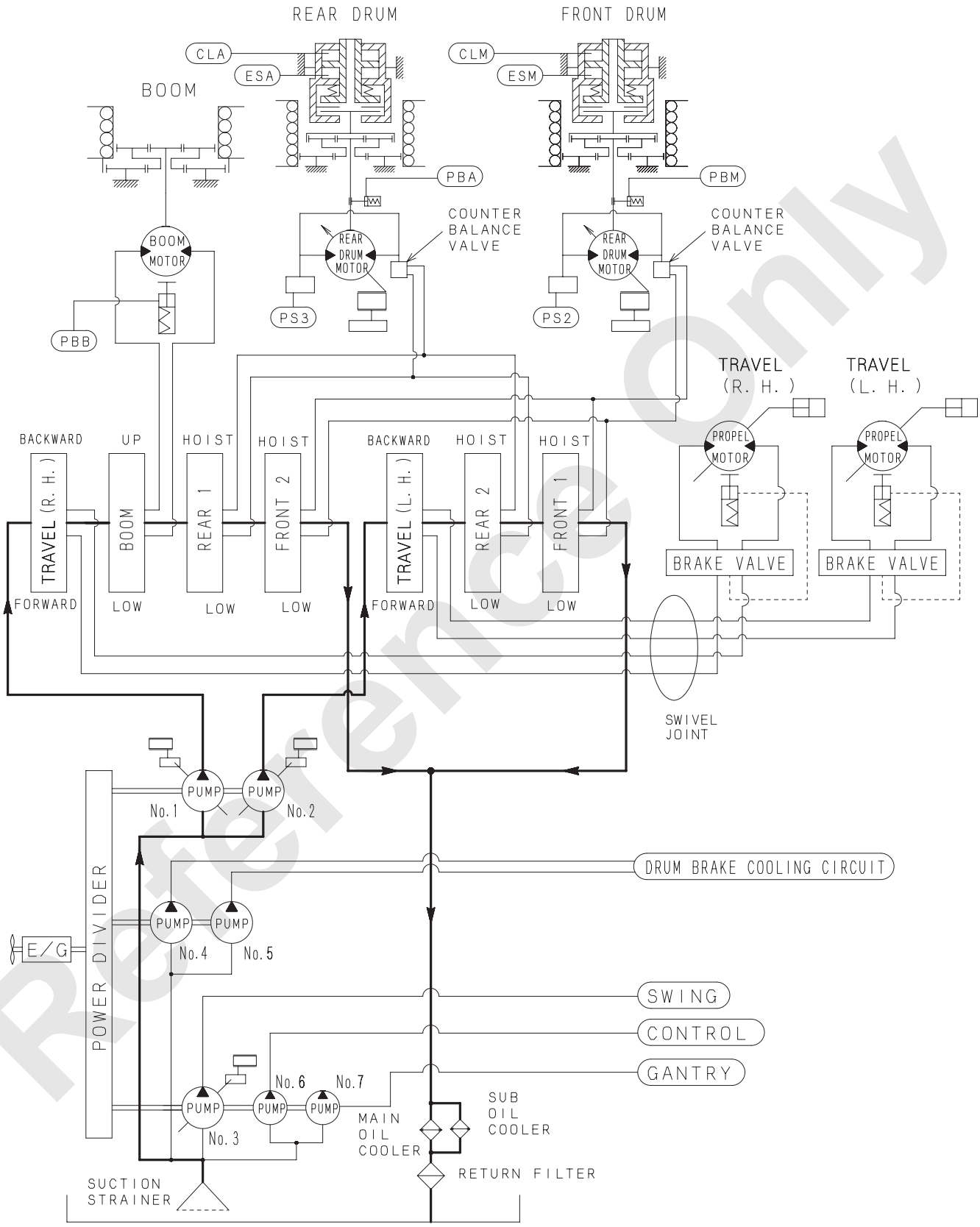

Reference Only

5.2.2 OIL FLOW FROM No.3 PUMP

No.3 pump is swing pump and is variable displacement pump.
When the swing remote control valve is in neutral, pressurized oil from No.3 pump flows into the swing control valve and returns to oil tank without load.
When the swing control valve is actuated with the pressurized oil from the remote control valve, pressurized oil from the swing pump flows into the swing motor to swing the upper machinery.

Reference Only

OIL FLOW FROM No.3 PUMP

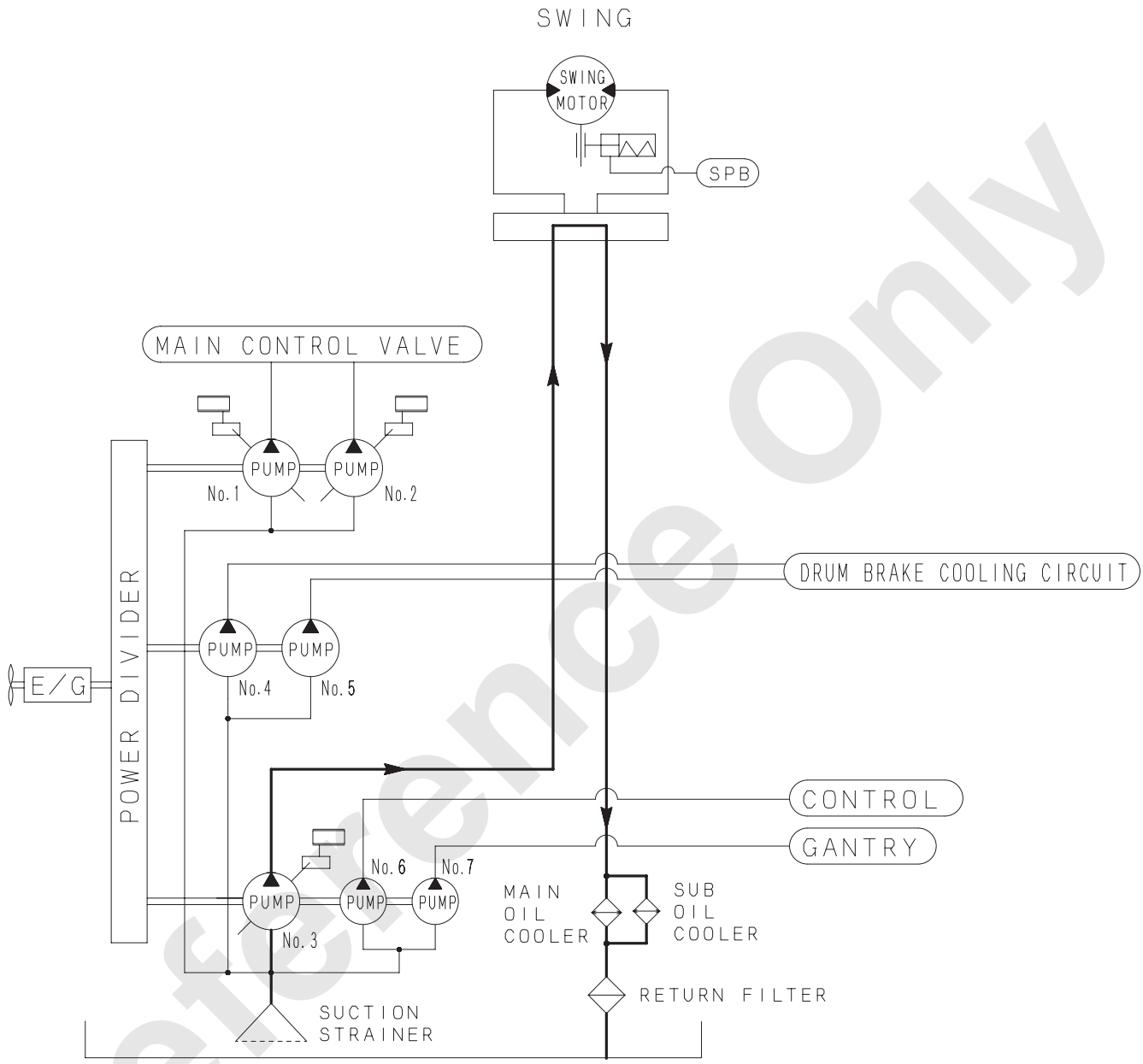

Reference Only

5.2.3 OIL FLOW FROM No.4 AND No.5 PUMPS (FRONT, REAR DRUM BRAKE COOLING)

No.4 and No.5 pumps are gear pumps and are used for cooling of front and rear drum brake (clutch).
The pressurized oil from both pumps passes through the front and rear drum brake (clutch) and returns to the tank through the filter.

Reference Only

OIL FLOW FROM No.4 AND No.5 PUMPS (FRONT, REAR DRUM BRAKE COOLING)

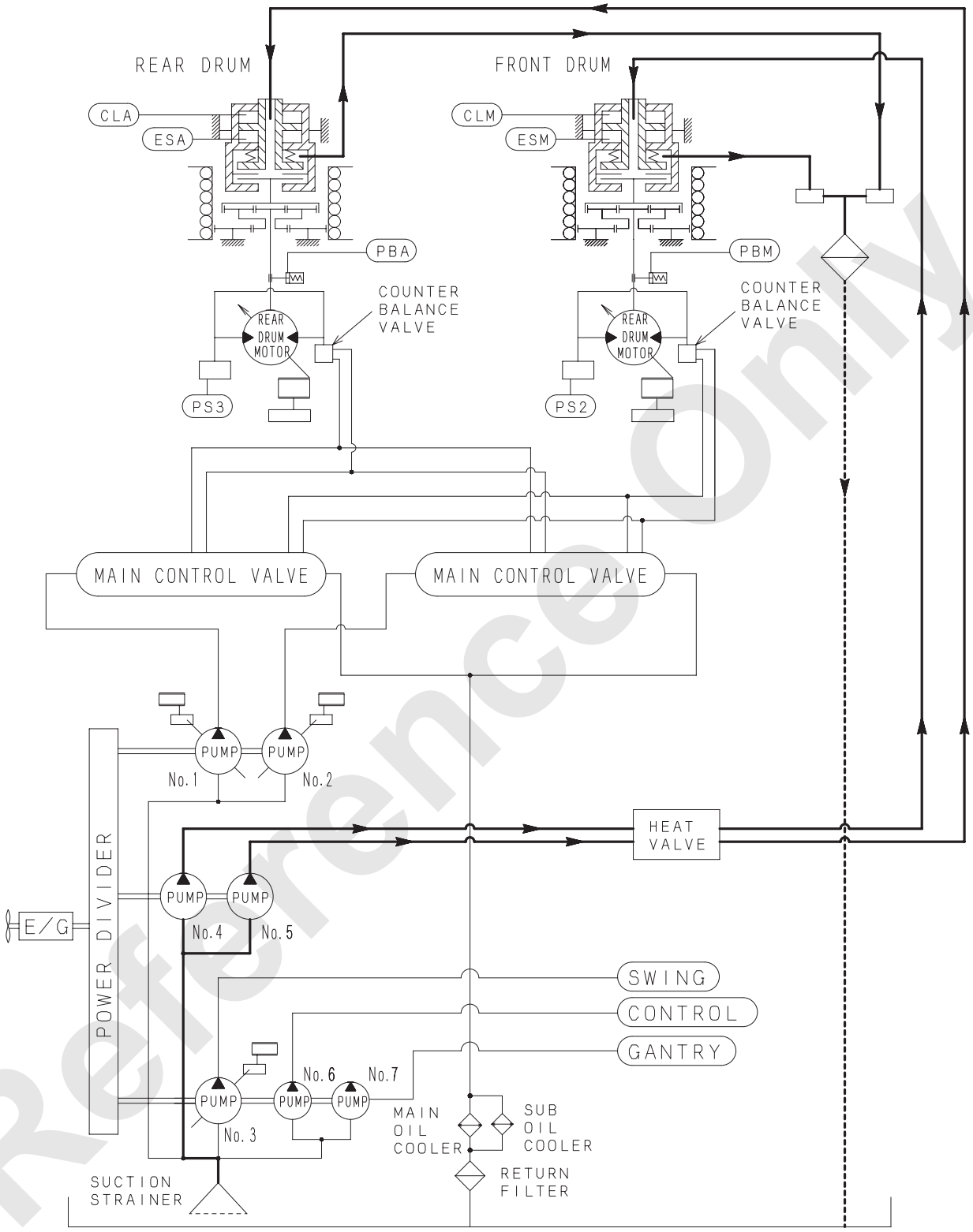

Reference Only

5.2.4 OIL FLOW FROM No.6 PUMP

No.6 pump is gear pump and is used for control.
Pressurized oil from the pump passes through the line filter and is pressure-reduced to 5.4 MPa and flows into the accumulator and then flows into 2 4-section valves and 2 2-section valves and the foot brake valve.

1. When function lock lever is in “LOCK” position

   When the function lock lever is in “LOCK” position, pressurized oil sent to 2-section valve which is shut off with the function lock (Remo-con cut) solenoid valve (SOL-3) and is not sent to the remote control valve.
   Therefore under this condition, even when the control lever is operated, control pressure will not be generated and the machine will not move.

Reference Only

OIL FLOW FROM No.6 PUMP (WHEN FUNCTION LOCK LEVER IS IN “LOCK” POSITION)

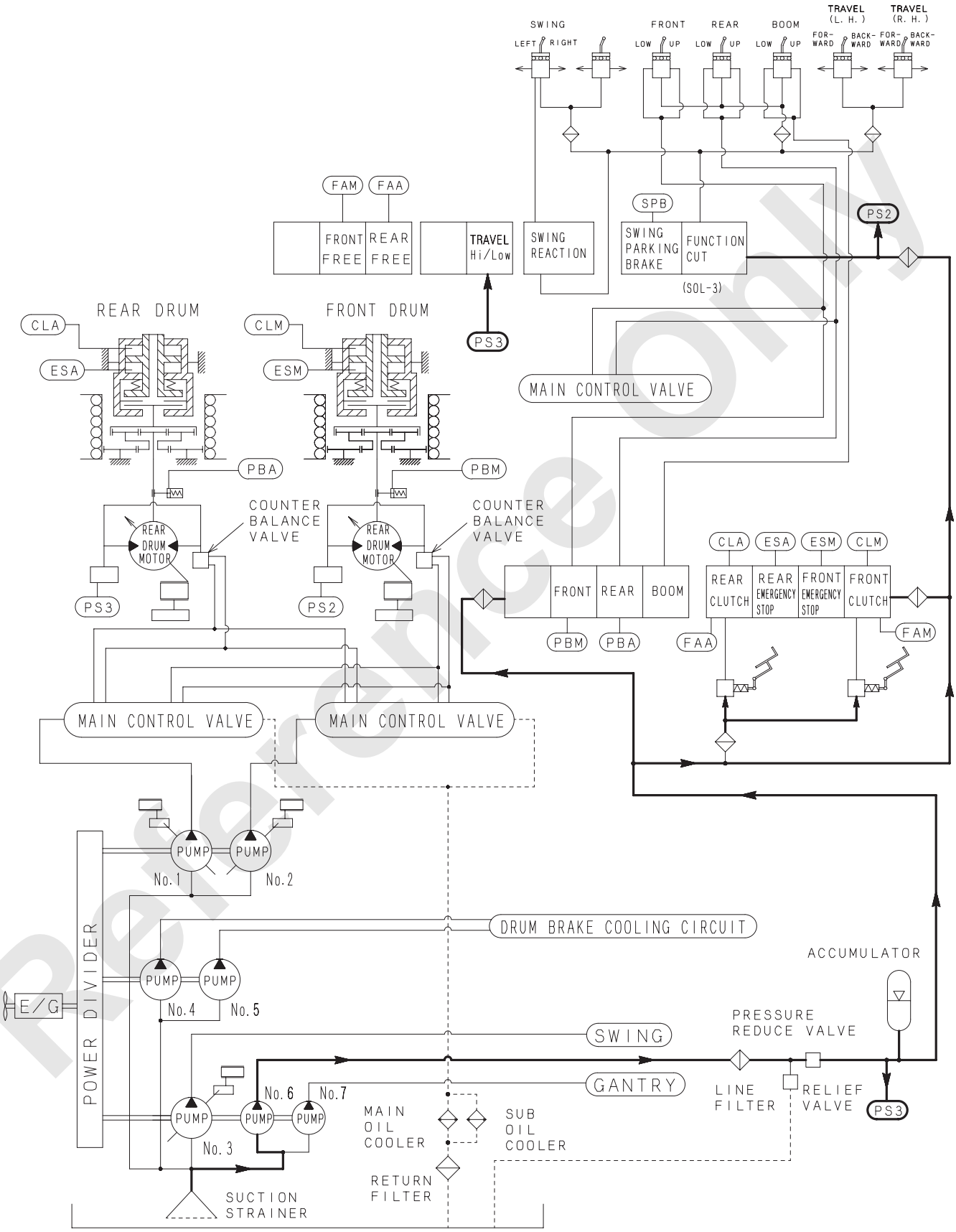

Reference Only

2. When function lock lever is in “WORK” position

When the function lock lever is in “WORK” position, pressurized oil sent to 2-section valve passes through the function lock (Remo-con cut) solenoid valve (SOL-3) and flows into the remote control valve.
Under this condition, when the control lever is operated, remote control pressure is sent to the main control valve and make each actuator functioned.

Reference Only

OIL FLOW FROM No.6 PUMP (WHEN FUNCTION LOCK LEVER IS IN “WORK” POSITION)

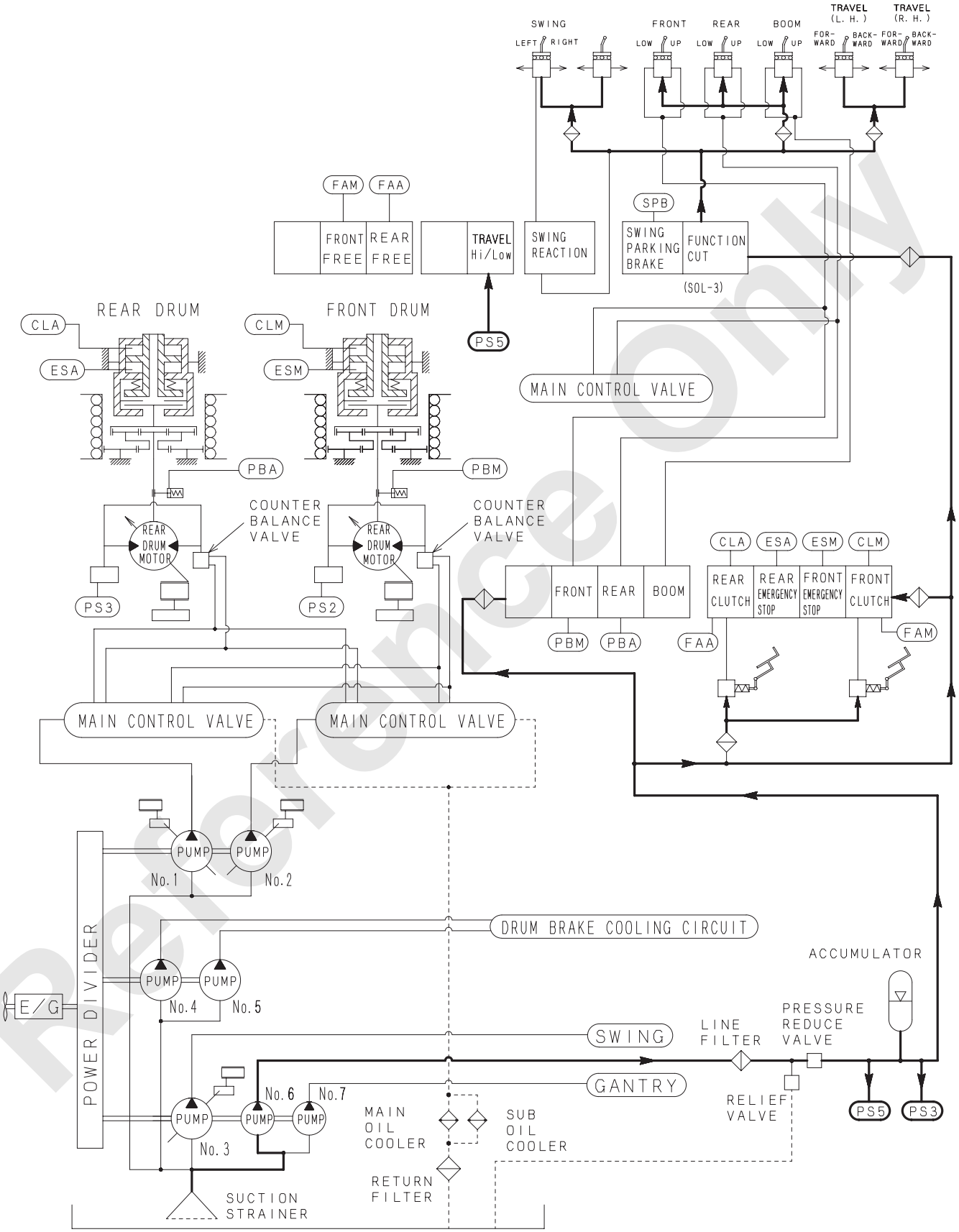

Reference Only

5.2.5 OIL FLOW FROM No.7 PUMP

1. Crawler extending cylinder

   No.7 pump (Aux. device pump) is fixed displacement gear pump and is used for crawler extending cylinder.
   When the lower pressure source valve located in the downstream side of the gantry raise control valve is operated, the pressurized oil from the pump passes through the swivel joint and flows into the crawler extending valve.
   When the crawler extending cylinder is being operated, return oil from the cylinder passes through the swivel joint and returns to the tank.

Reference Only

OIL FLOW FROM No.7 PUMP (CRAWLER EXTENDING CYLINDER)

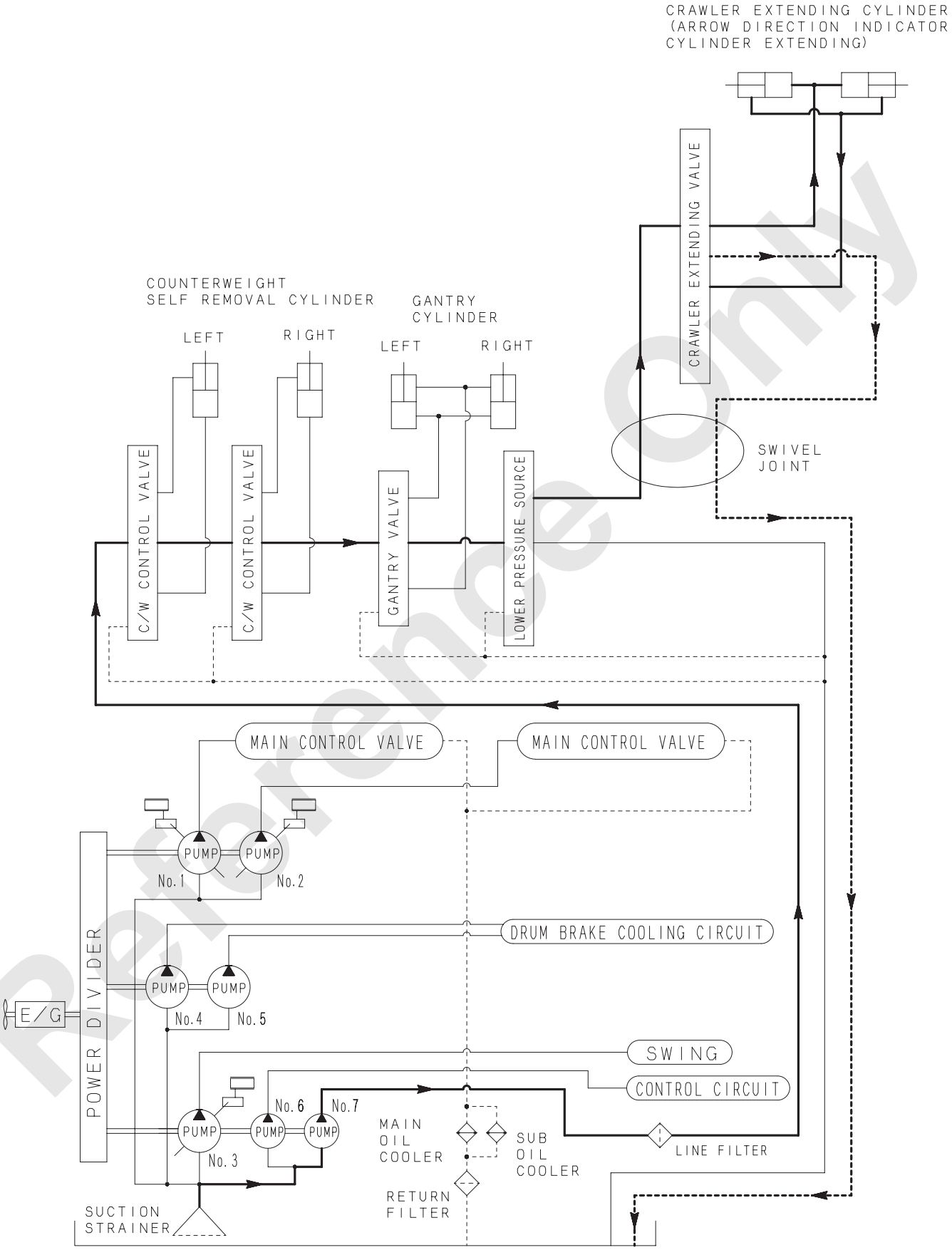

Reference Only

2. Translifter

No.7 pump (Aux. device pump) is fixed displacement gear pump and is used for the translifter cylinder.
When the lower pressure source valve located in the downstream side of the gantry raise control valve is operated, the pressurized oil from the pump passes through the swivel joint and flows into the translifter valve.
When the translifter cylinder is being operated, return oil from the cylinder passes through the swivel joint and returns to the tank.

Reference Only

OIL FLOW FROM No.7 PUMP (TRANSLIFTER)

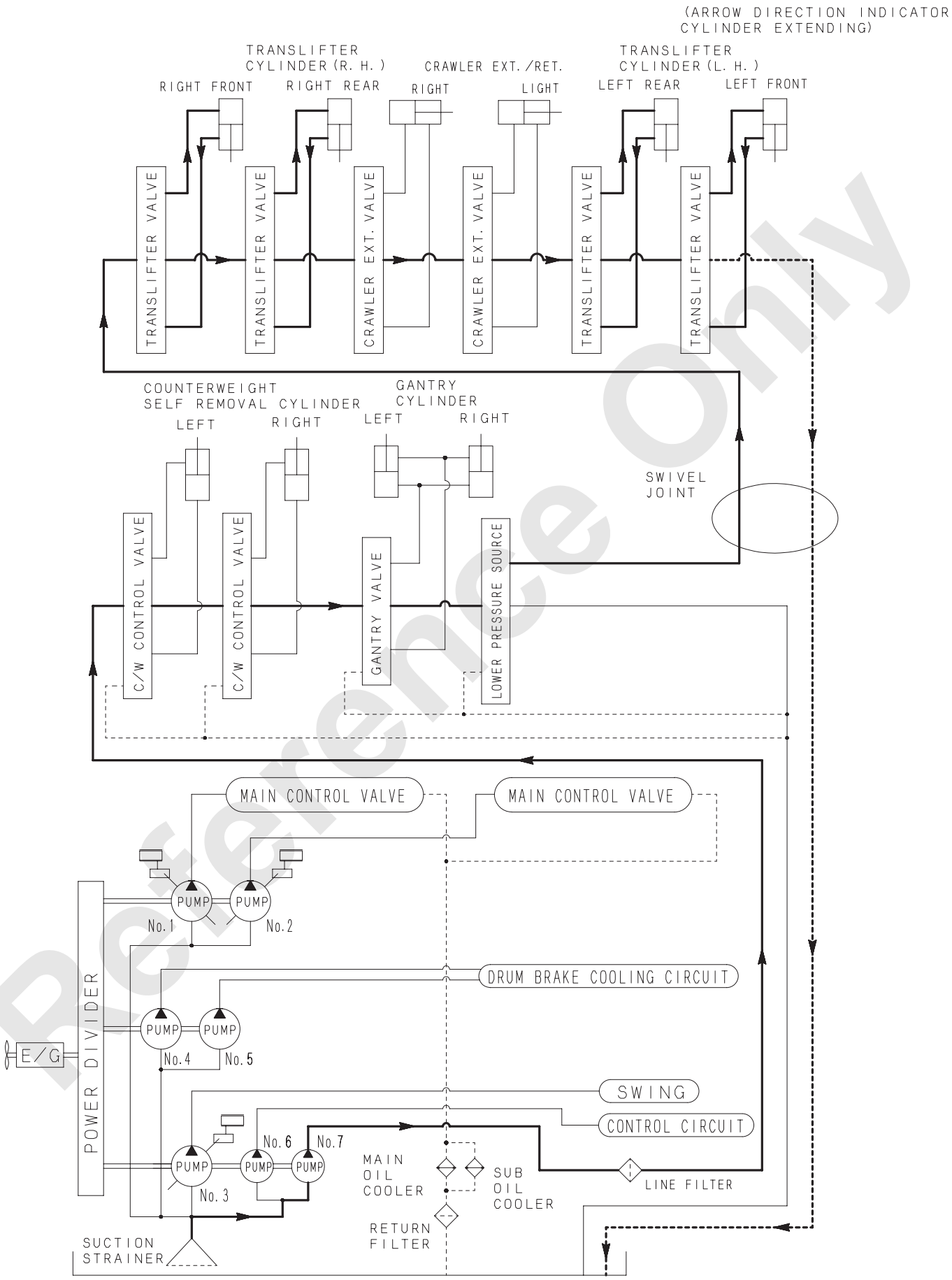

Reference Only

3. Gantry raise cylinder

No.7 pump (Aux. device pump) is fixed displacement gear pump and is used for gantry raise.
The pressurized oil from the pump flows into the gantry raise control valve.
When the gantry raise control valve is in neutral, the pressurized oil passes through the valve and returns to the tank without load.

Reference Only

OIL FLOW FROM No.7 PUMP (GANTRY HOIST CYLINDER)

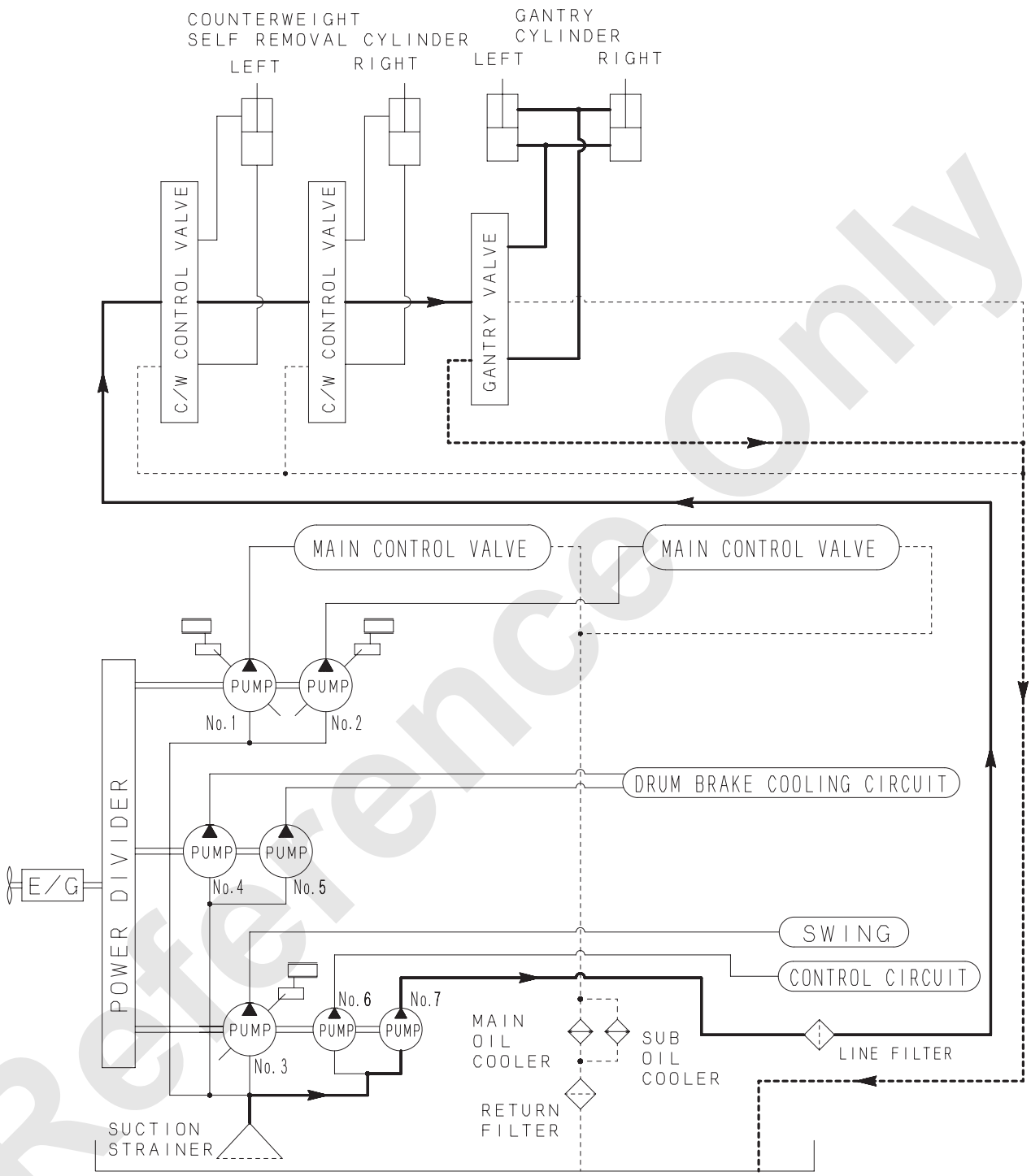

Reference Only

4. Counterweight self removal cylinder

No.7 pump (Aux. device pump) is fixed displacement gear pump and is used for counterweight self removal.
The pressurized oil from the pump flows into the counterweight self removal control valve.
When the counterweight self removal control valve is in neutral, the pressurized oil passes through the valve and returns to the tank without load.

Reference Only

OIL FLOW FROM No.7 PUMP (COUNTERWEIGHT SELF REMOVAL CYLINDER)

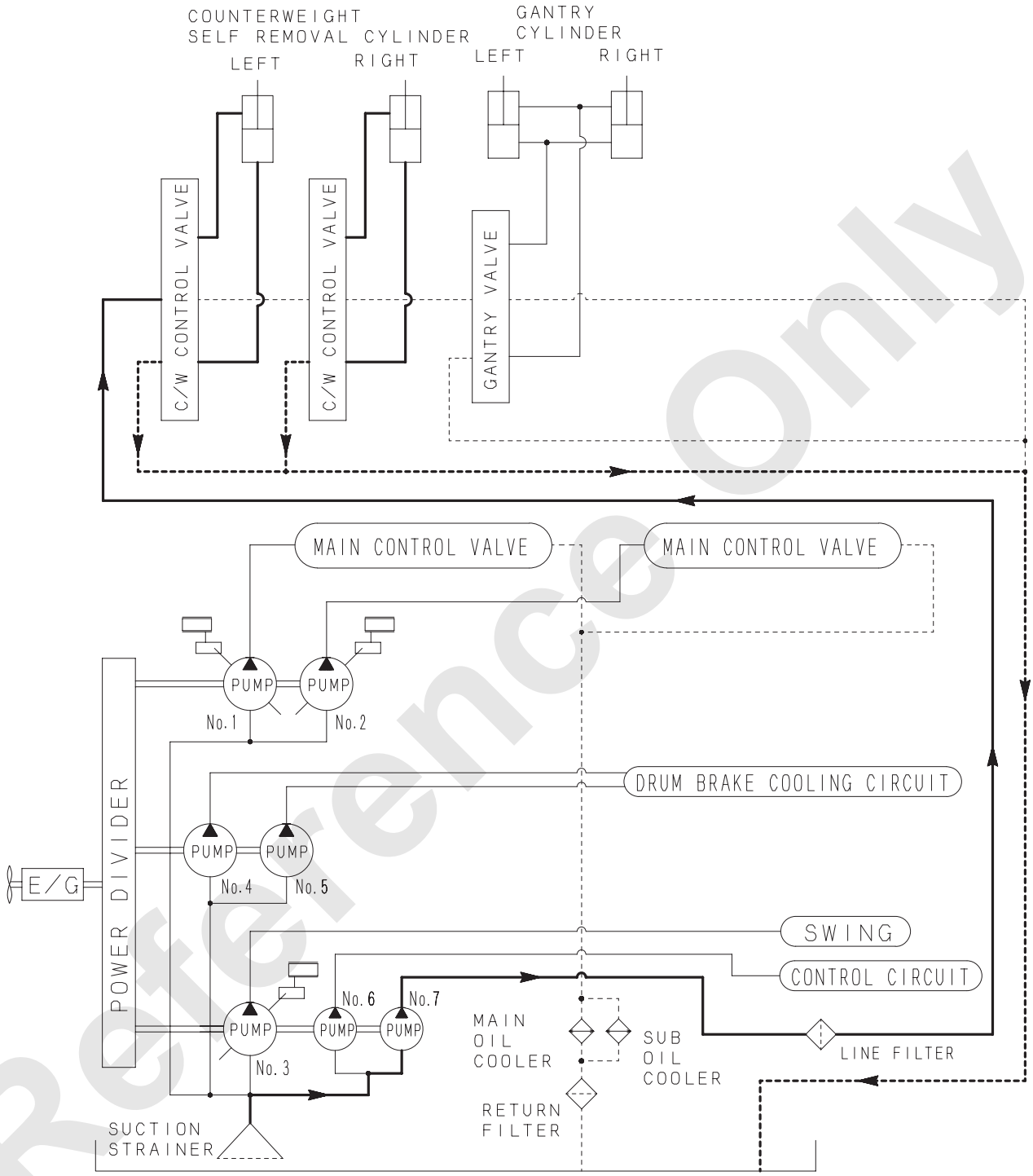

Reference Only

5.3 VALVE

4-SECTION VALVE

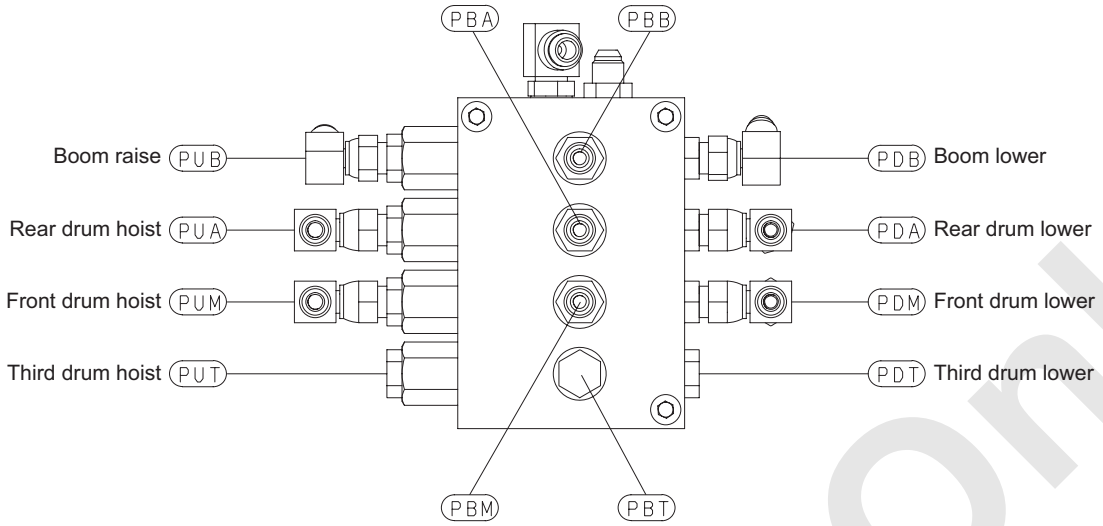

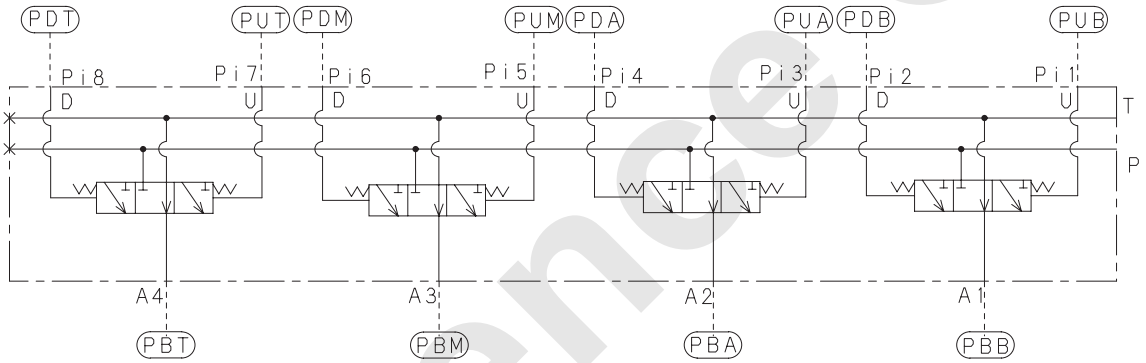

Reference Only

8-SECTION VALVE (WITH SHUTTLE VALVE)

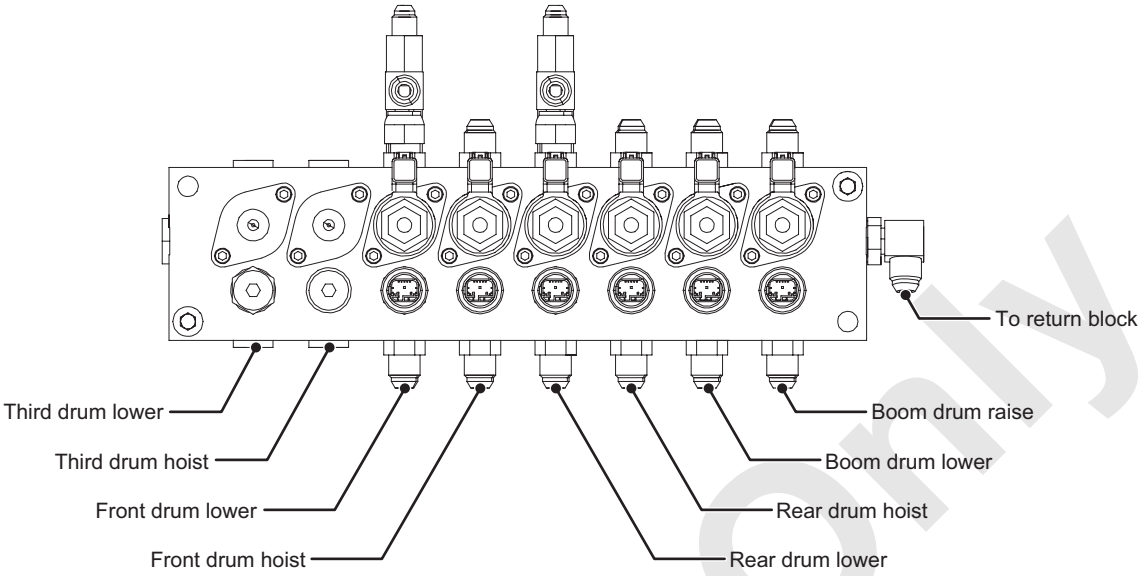

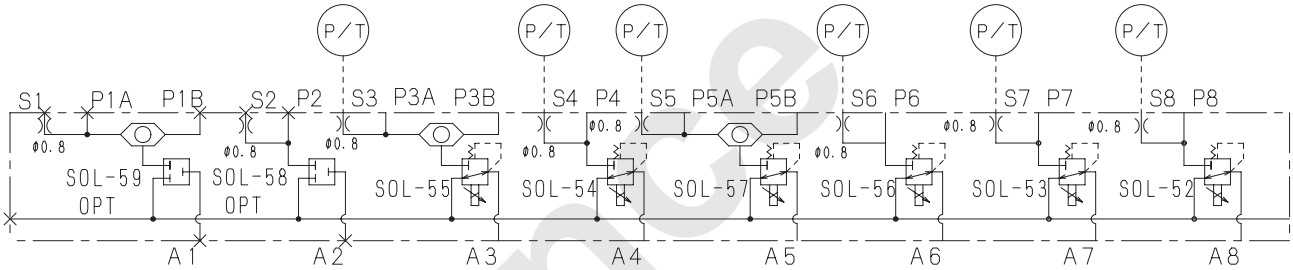

Reference Only

4-SECTION VALVE

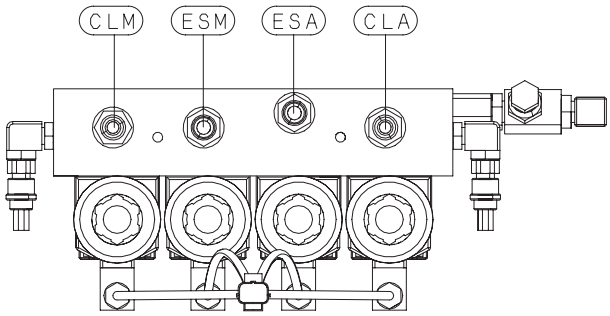

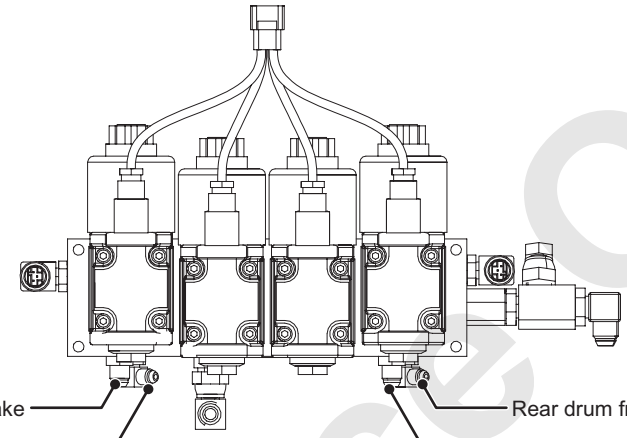

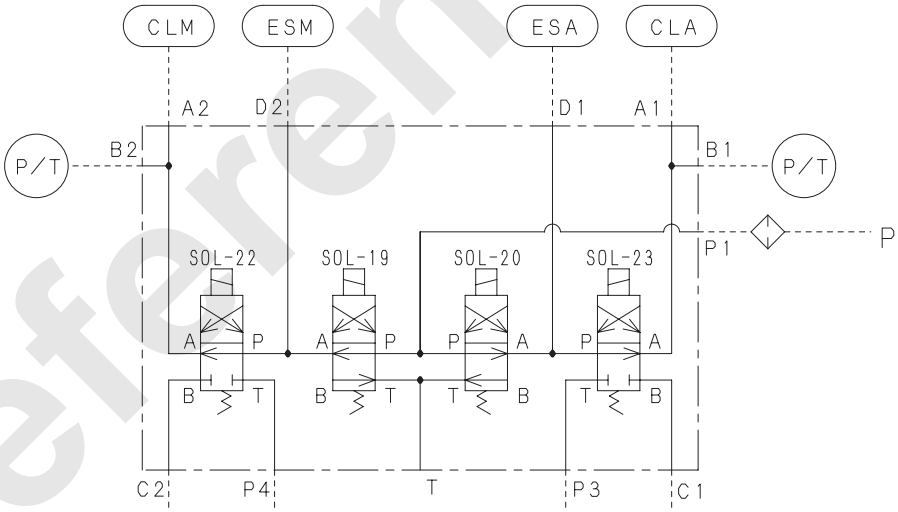

Reference Only

3-SECTION VALVE

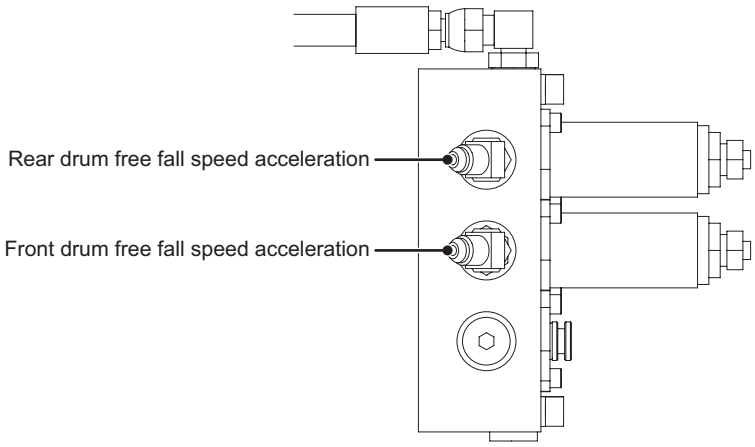

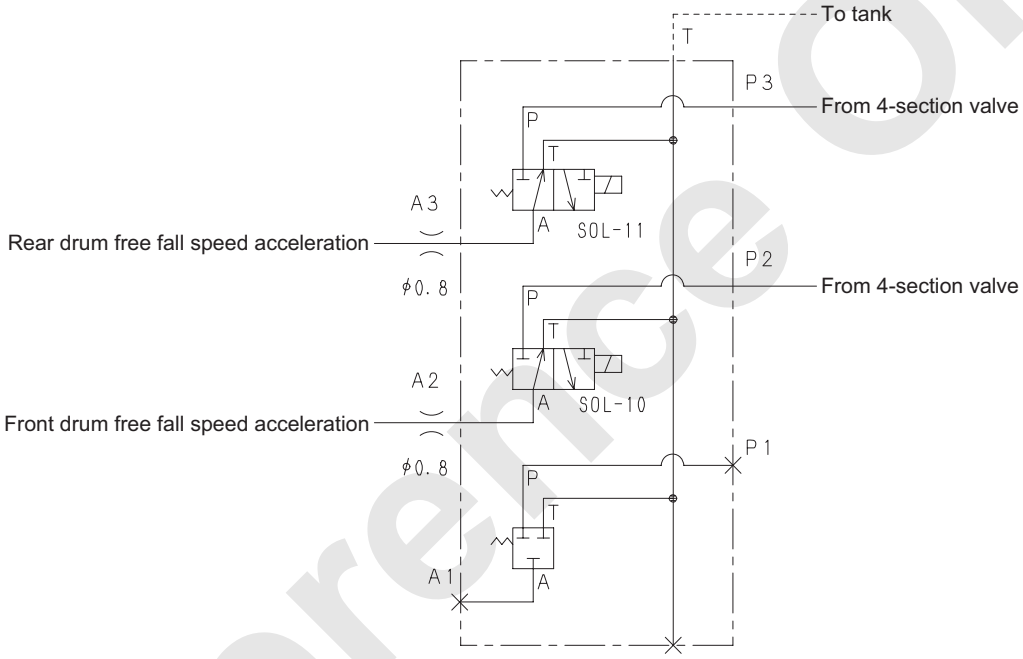

Reference Only

5-SECTION VALVE

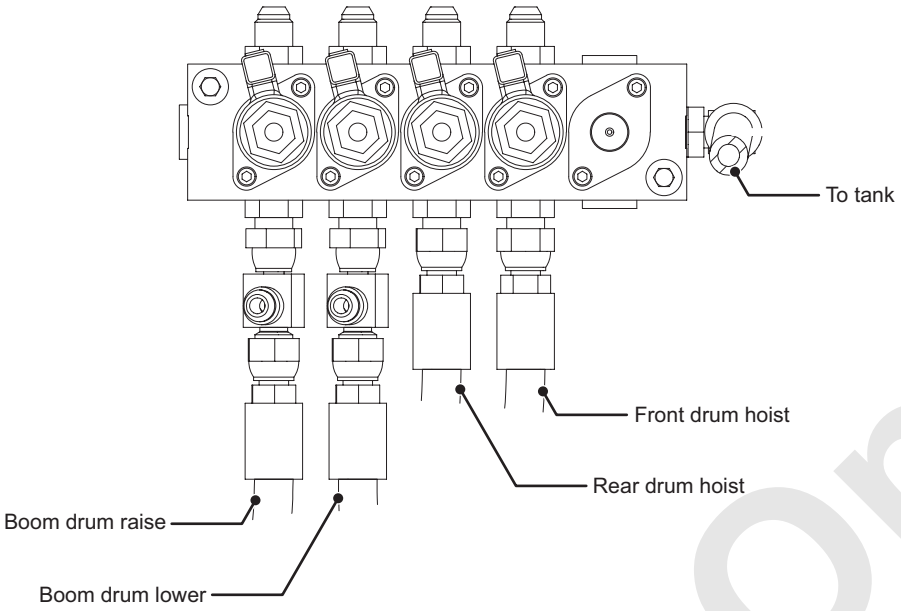

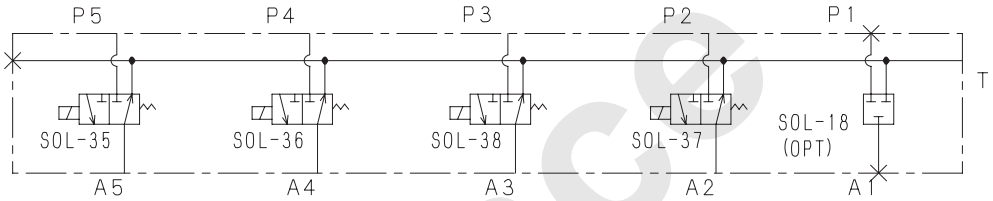

Reference Only

2-SECTION VALVE

- Beside of swing motor

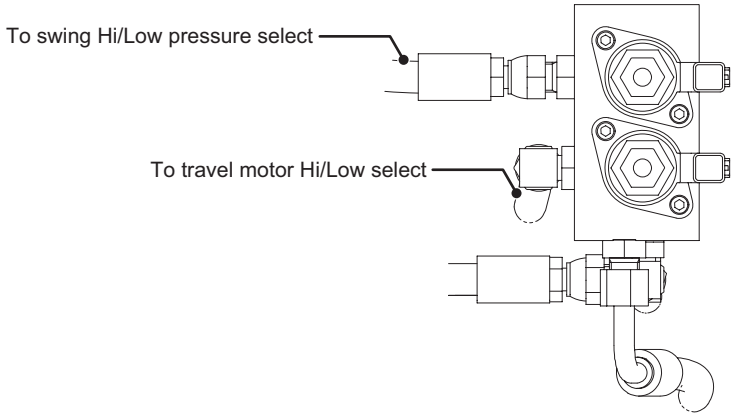

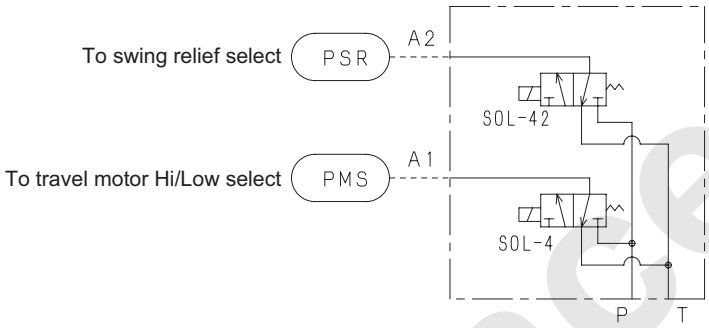

- In the cab deck

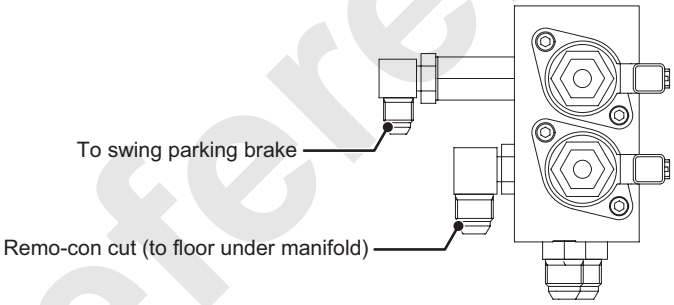

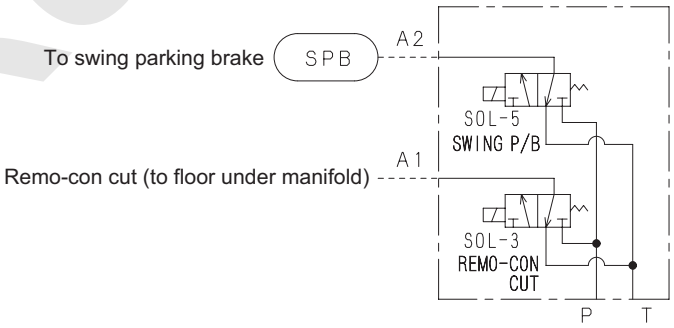

Reference Only

1-SECTION VALVE

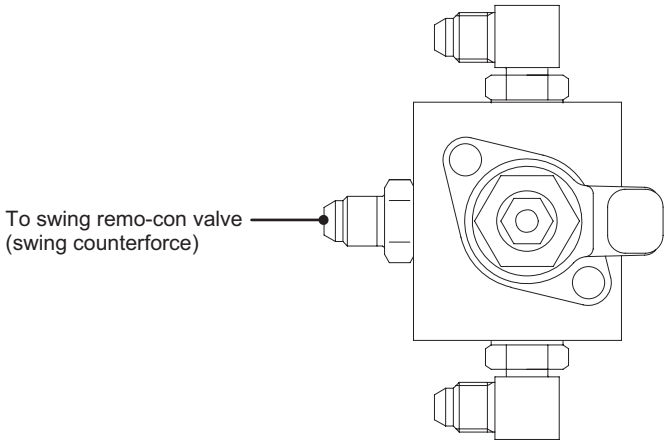

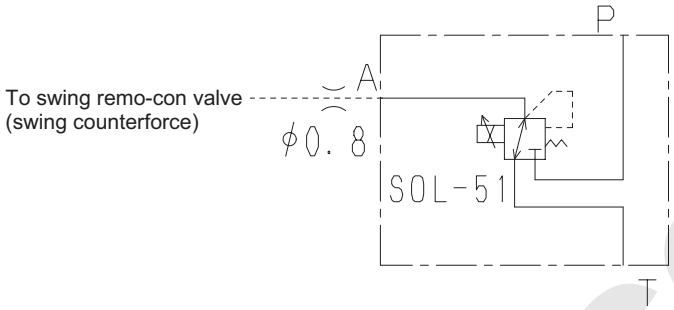

Reference Only

MAIN CONTROL VALVE (4-SECTION)

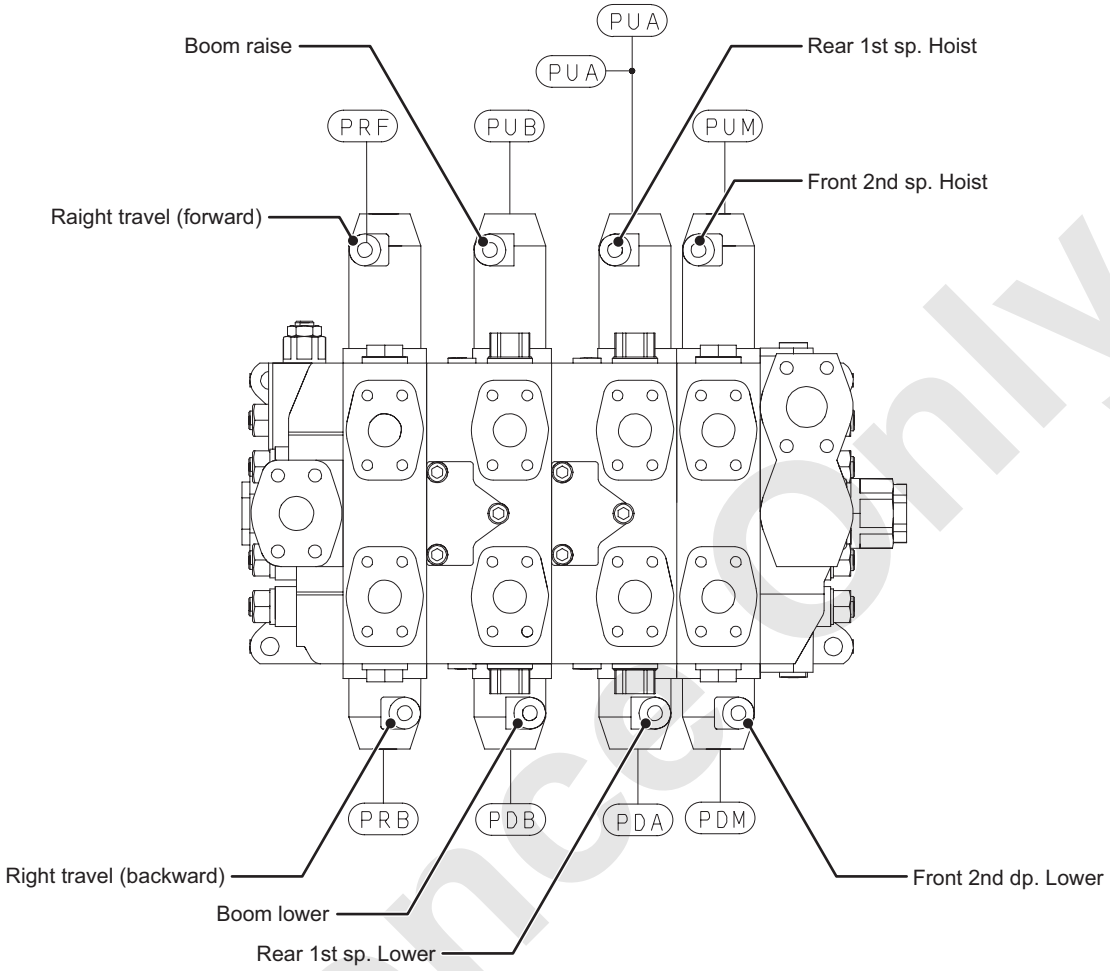

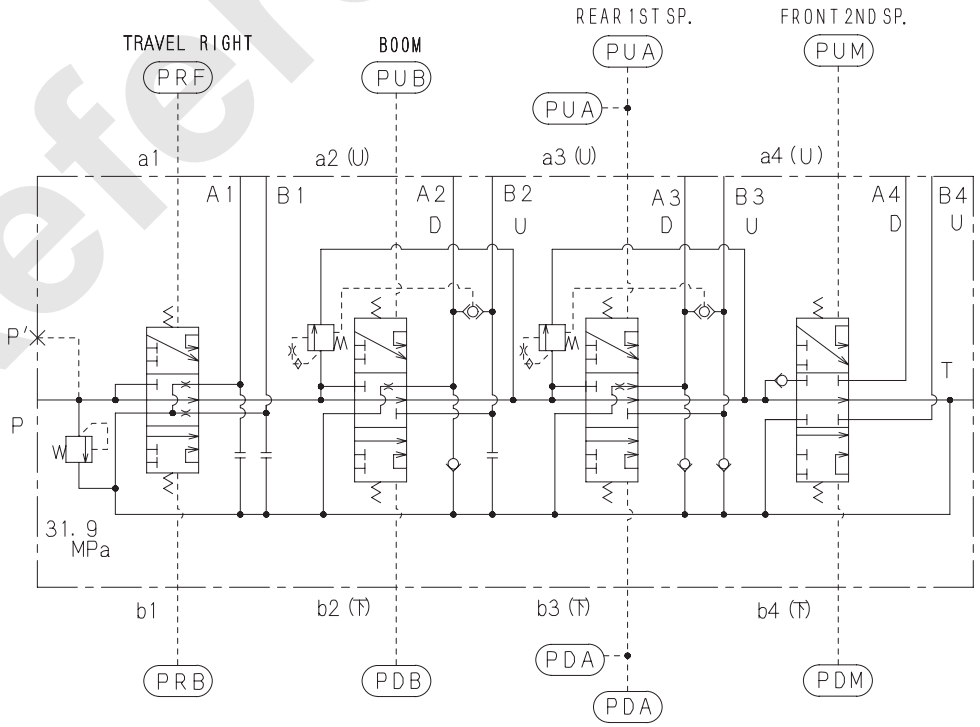

Reference Only

MAIN CONTROL VALVE (3-SECTION)

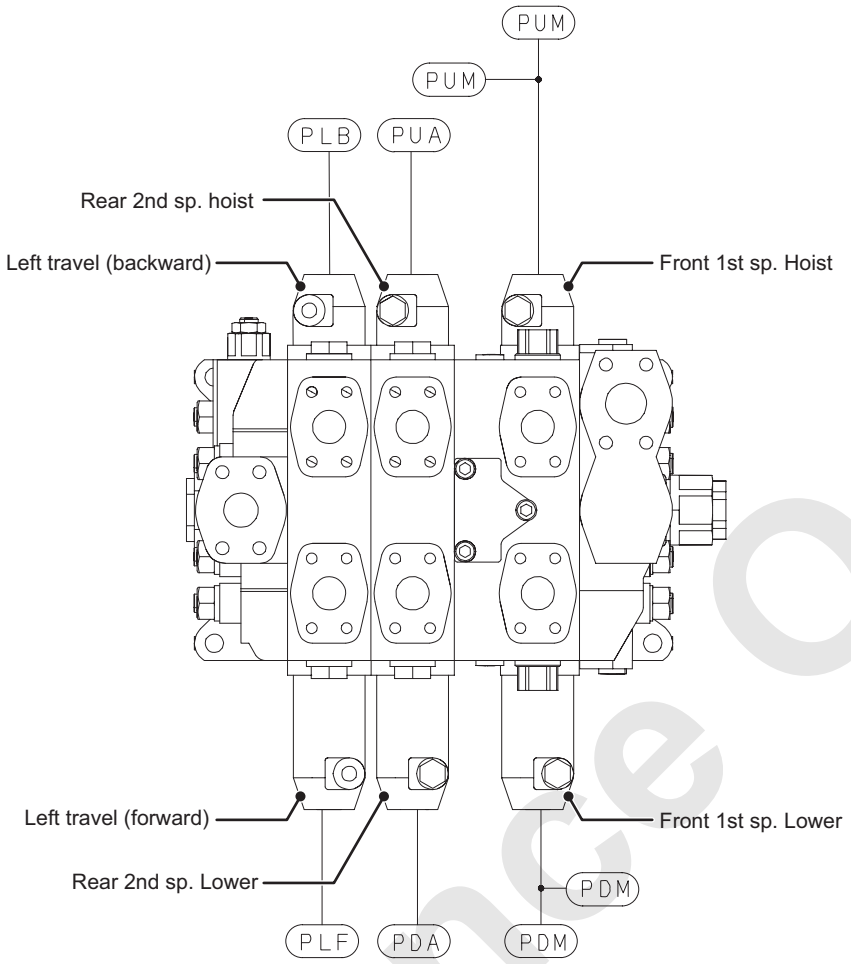

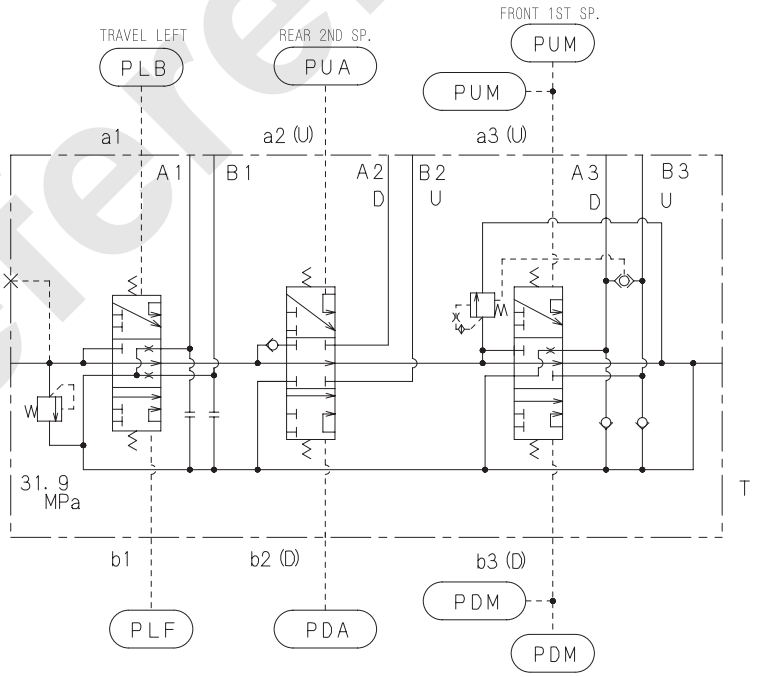

Reference Only

MAIN CONTROL VALVE (THIRD 1-SECTION)

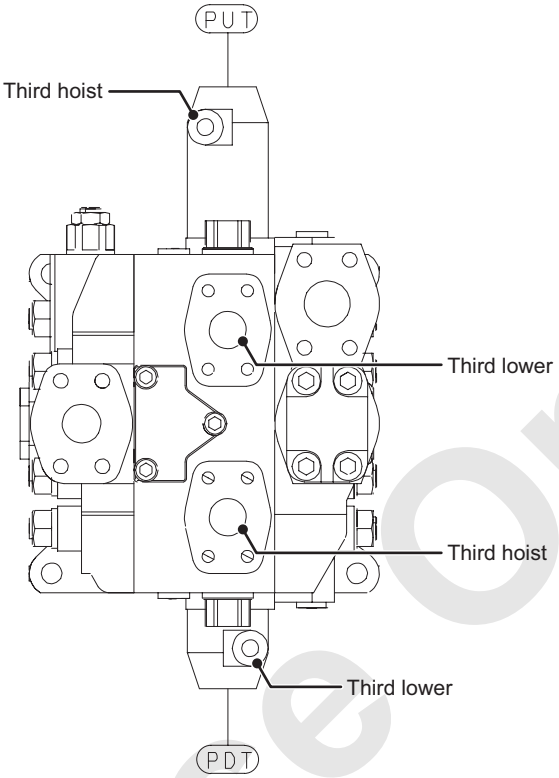

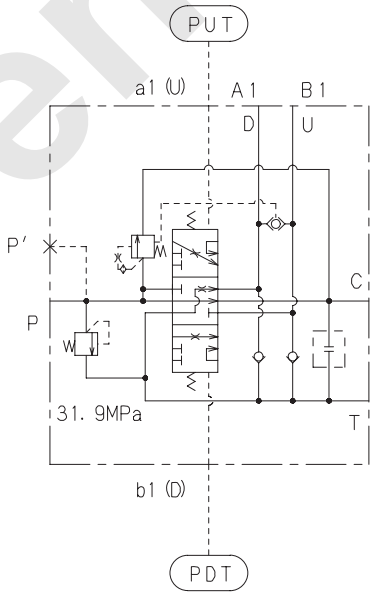

Reference Only

Reference Only

6. HOIST SYSTEM

6.1 APPARATUS AND LOCATION OF COMPONENTS 6-2
6.2 CONSTRUCTION AND FUNCTION 6-6
6.2.1 HYDRAULIC SCHEMATIC 6-6
6.2.2 LIFTING A LOAD 6-8
6.2.3 HOLDING A HOISTED LOAD 6-10
6.2.4 LOWERING A LOAD (POWER LOWERING) 6-12
6.2.5 FREE FALL OPERATION 6-14
6.2.6 G WINCH MODE LIFTING 6-22
6.2.7 G WINCH MODE LOWERING 6-23
6.3 WINCH 6-24
6.3.1 WINCH INSTALLATION 6-24
6.3.2 WINCH ASSEMBLY 6-25
6.3.3 REDUCTION UNIT ASSEMBLY 6-26
6.3.4 ADJUSTMENT OF DRUM LOCK 6-28
6.4 BRAKE PEDAL 6-30
6.4.1 ASSEMBLY DRAWING 6-30
6.4.2 ADJUSTING THE BRAKE PEDAL 6-32
6.4.3 BLEEDING AIR FROM BRAKE CIRCUIT 6-33

Reference Only

Reference Only

6. HOIST SYSTEM

The hoist system consists of the front drum and rear drum assembly.
Each drum assy. consists of hoist motor (brake built in), reduction unit, drum clutch (common to free fall brake) and drum lock.
The pressurized oil delivered from 2 main pumps (No.1, No.2) is controlled by the control valve and flows into each motors.

Reference Only

6.1 APPARATUS AND LOCATION OF COMPONENTS

Note

Refer to the article "6.2 CONSTRUCTION AND FUNCTION" for circuit diagram and function.

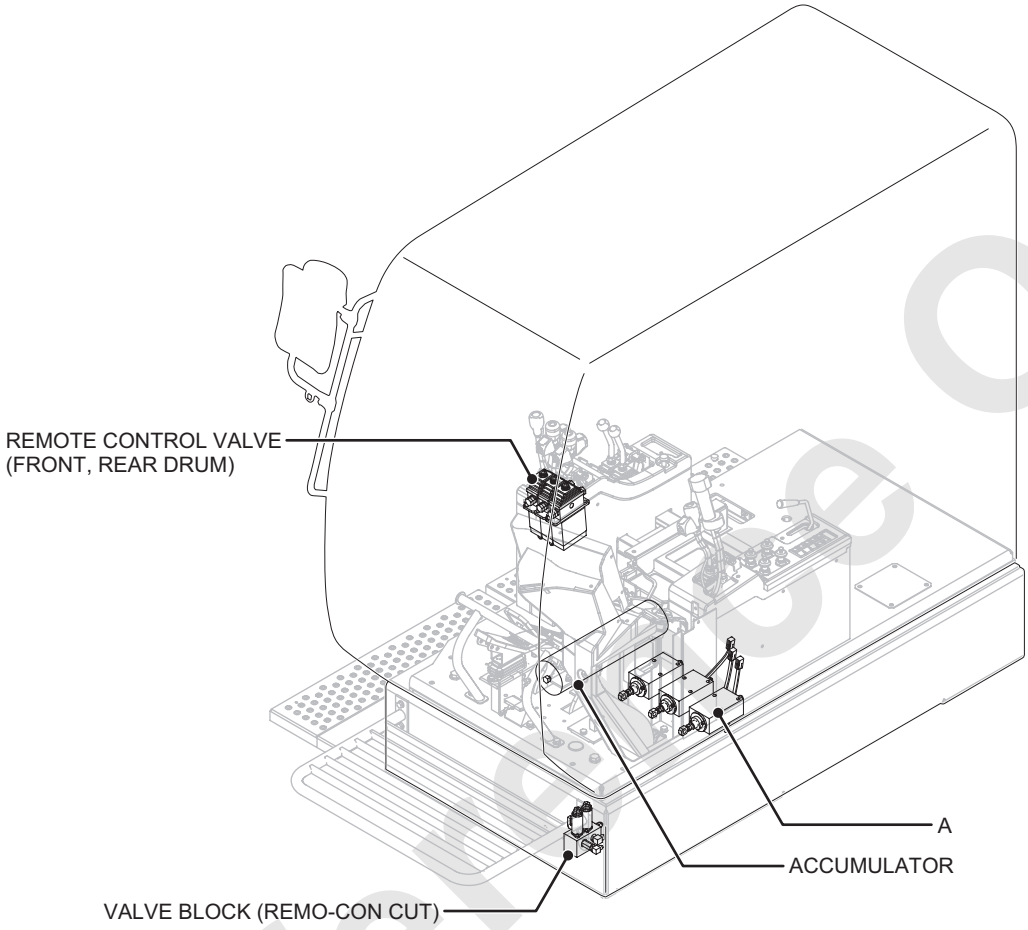

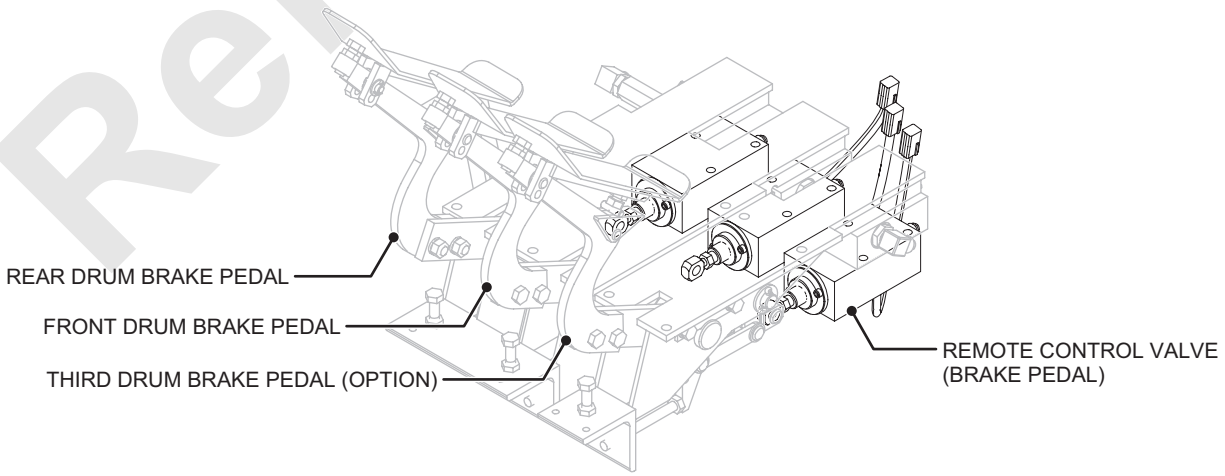

Detail A

Reference Only

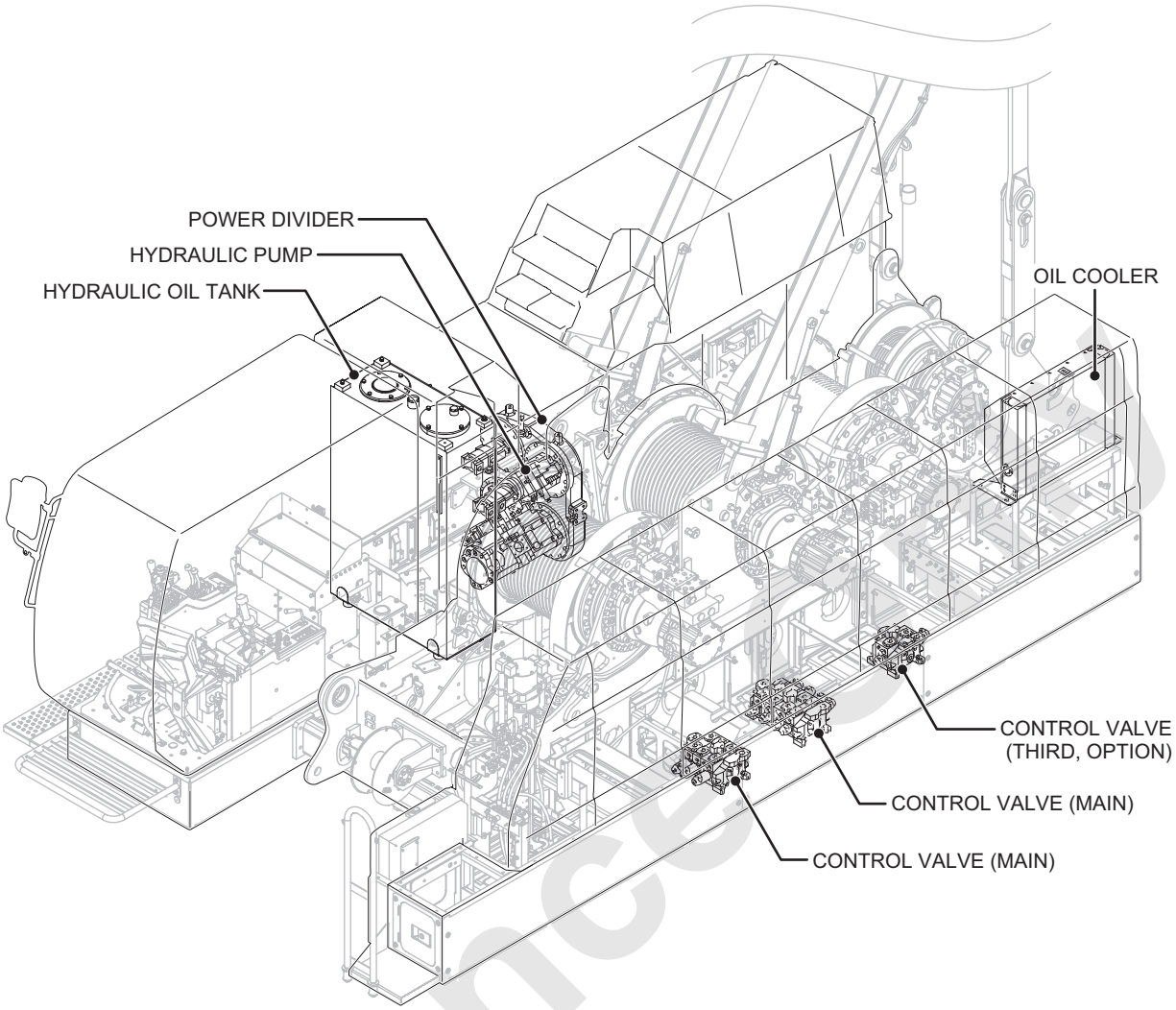
POWER DIVIDER
HYDRAULIC PUMP
HYDRAULIC OIL TANK
OIL COOLER
CONTROL VALVE
(THIRD, OPTION)
CONTROL VALVE (MAIN)
CONTROL VALVE (MAIN)

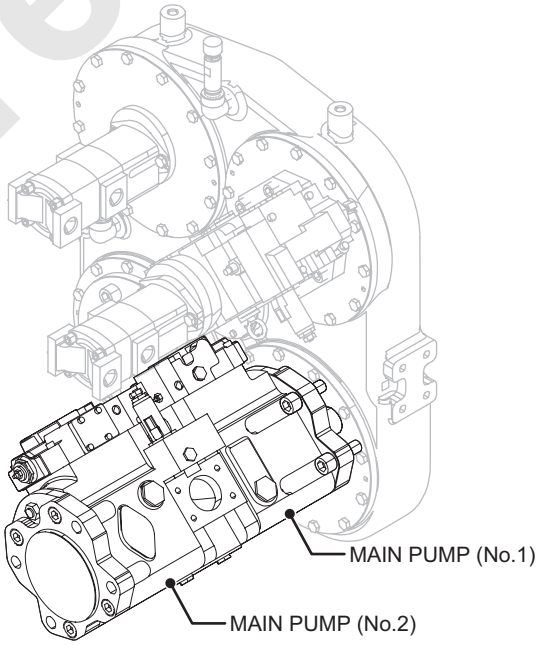
MAIN PUMP (No.1)
MAIN PUMP (No.2)

Reference

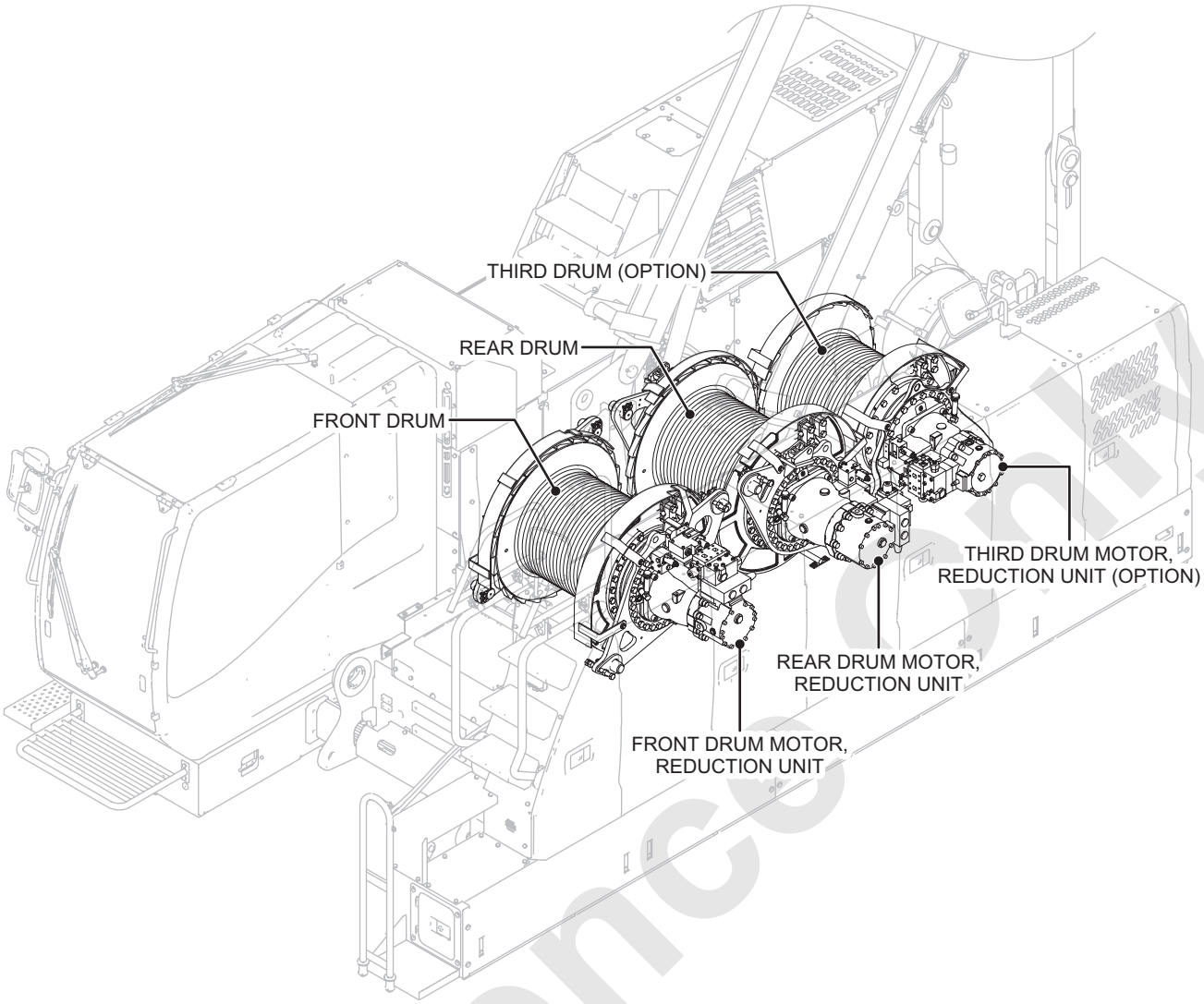

Reference Only

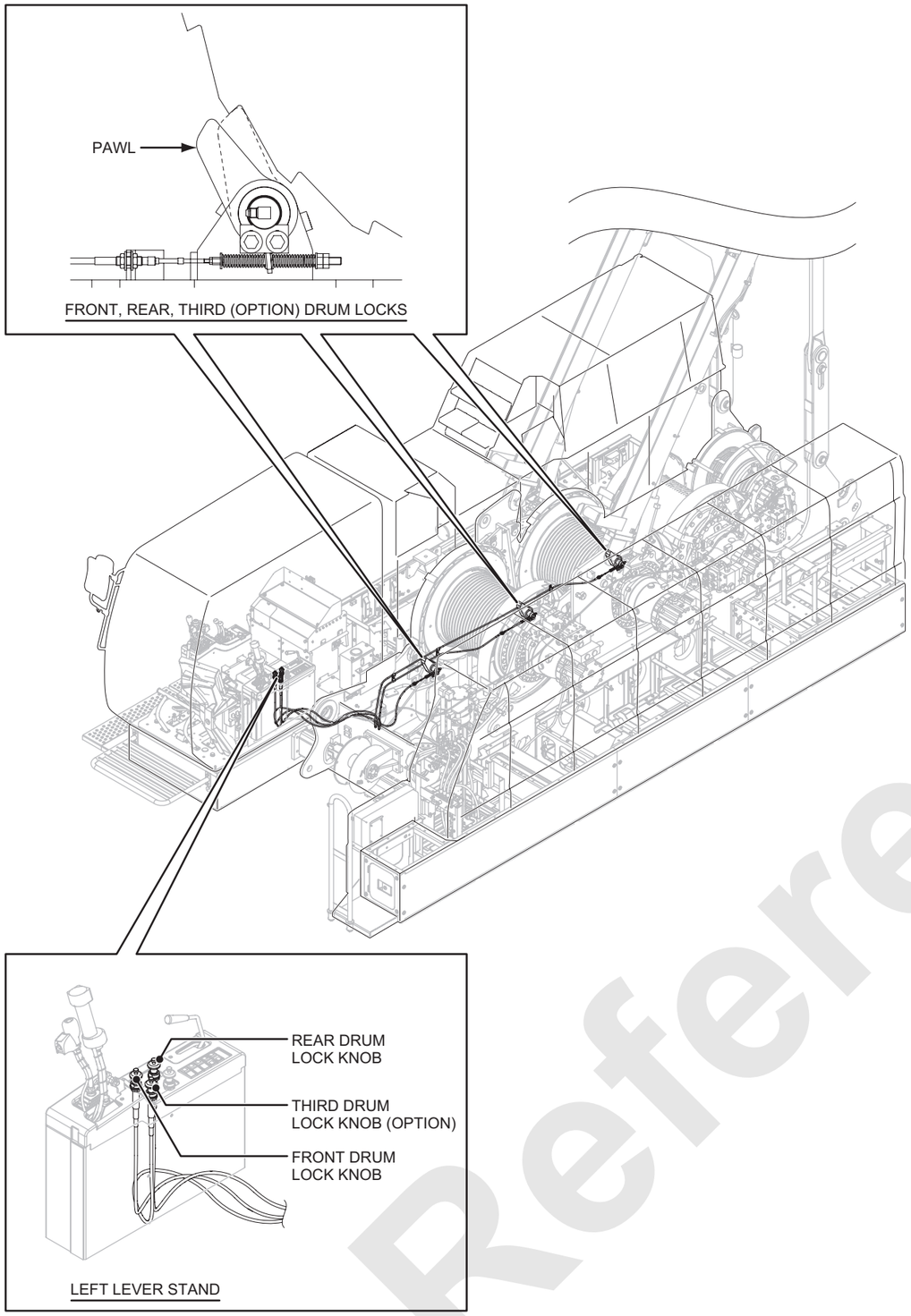

Reference Only

6.2 CONSTRUCTION AND FUNCTION

6.2.1 HYDRAULIC SCHEMATIC

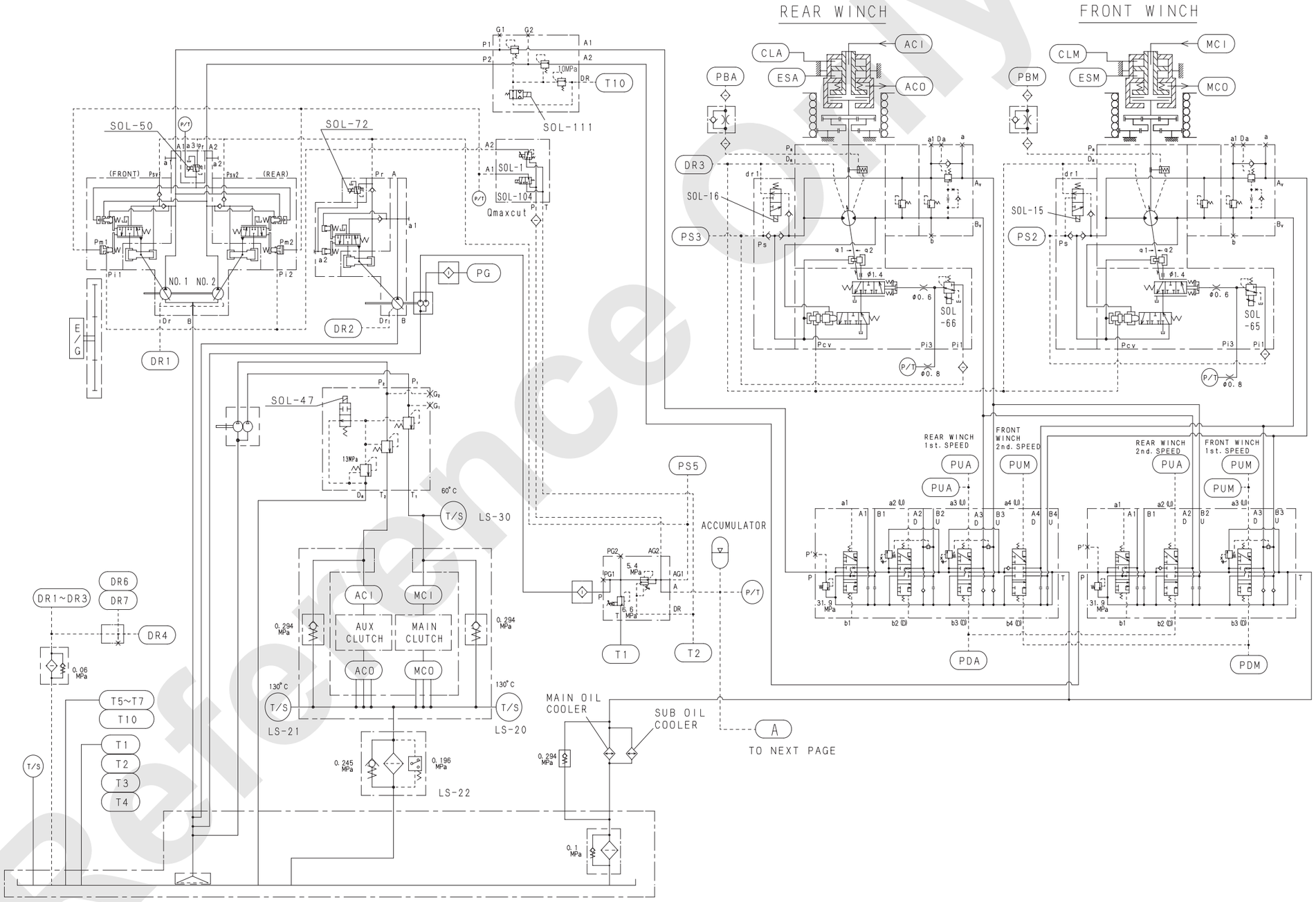

Reference Only

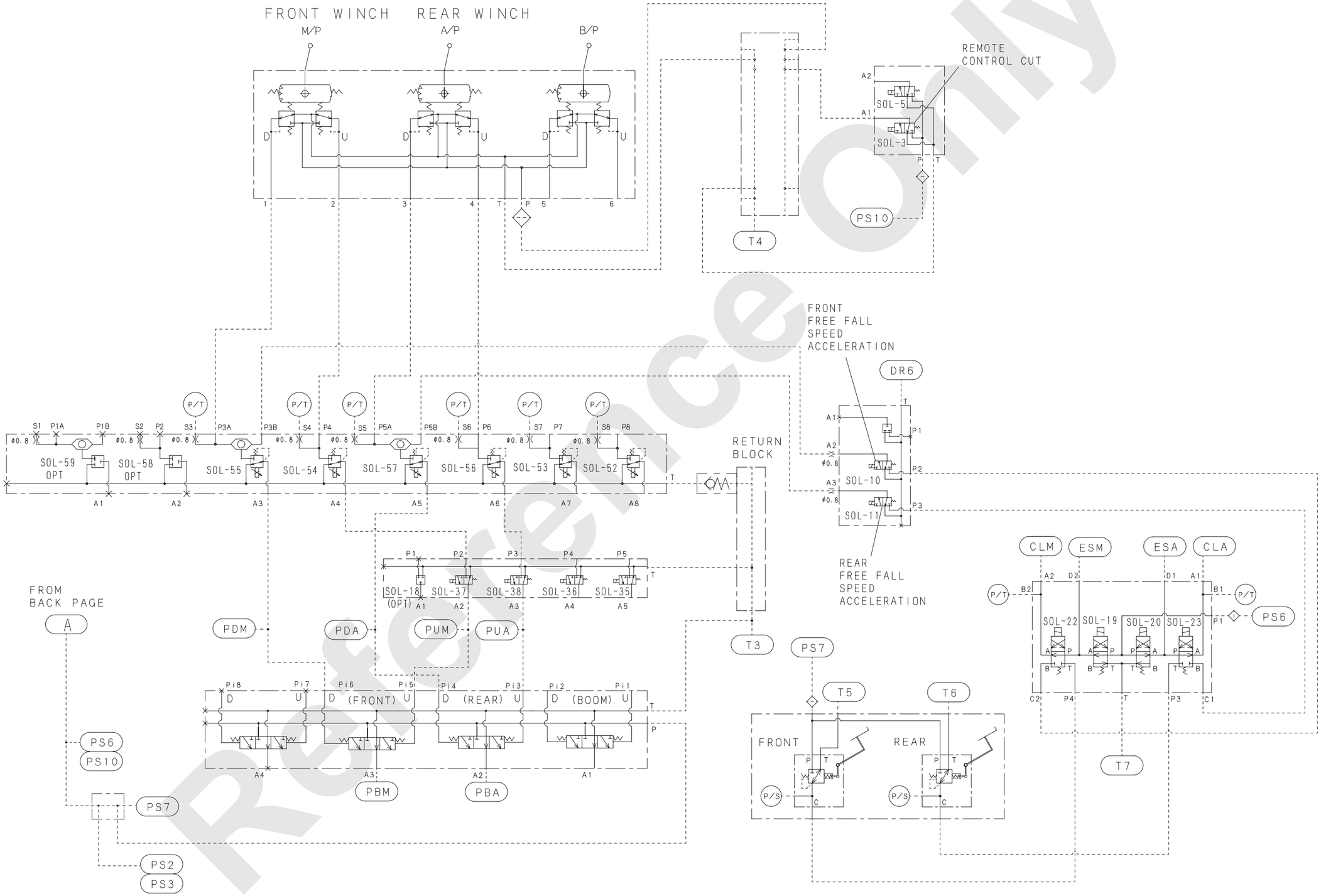

Reference Only

6.2.2 LIFTING A LOAD

Function of the front drum and the rear drum are exactly same.
The front drum is explained here as an example.

Pressurized oil from the main pump (No.1, No.2) flows through the main control valve, and transmitting the power to the hoist system.
While the function lock lever is in the “WORK” position (SOL-3 : “ON” position), oil pressure from the control pump flows to the accumulator and into the foot brake valve block, the clutch valve block, brake valve block (4-section pilot operated valve) and through the valve block (2-section solenoid valves) and into the remote control valve.
The pressurized oil is also fed to the both sides oil chambers of the front drum clutch cylinder (“CLM”, “ESM”) via the clutch valve block (4-section solenoid valves).
Since the cylinder thrust force by the pressurized oil is not generated, the clutch is connected with the spring.
When the front drum control lever is operated in the “hoist load” direction, it directs control pressure oil through the remote control valve and into the “PUM” and “PUM2” ports of the main control valve where it moves the spool.

At the same time, the control pressurized oil flows into the “PBM” port of the brake cylinder built in the winch motor via the brake valve block (4-section pilot operated valves), and the motor brake is released.
As directed by the position of the spool, the main pump (No.1, No.2) oil flowing into the control valve is sent to the hoist side of the hoist motor to drive the front drum and thereby hoist the load.

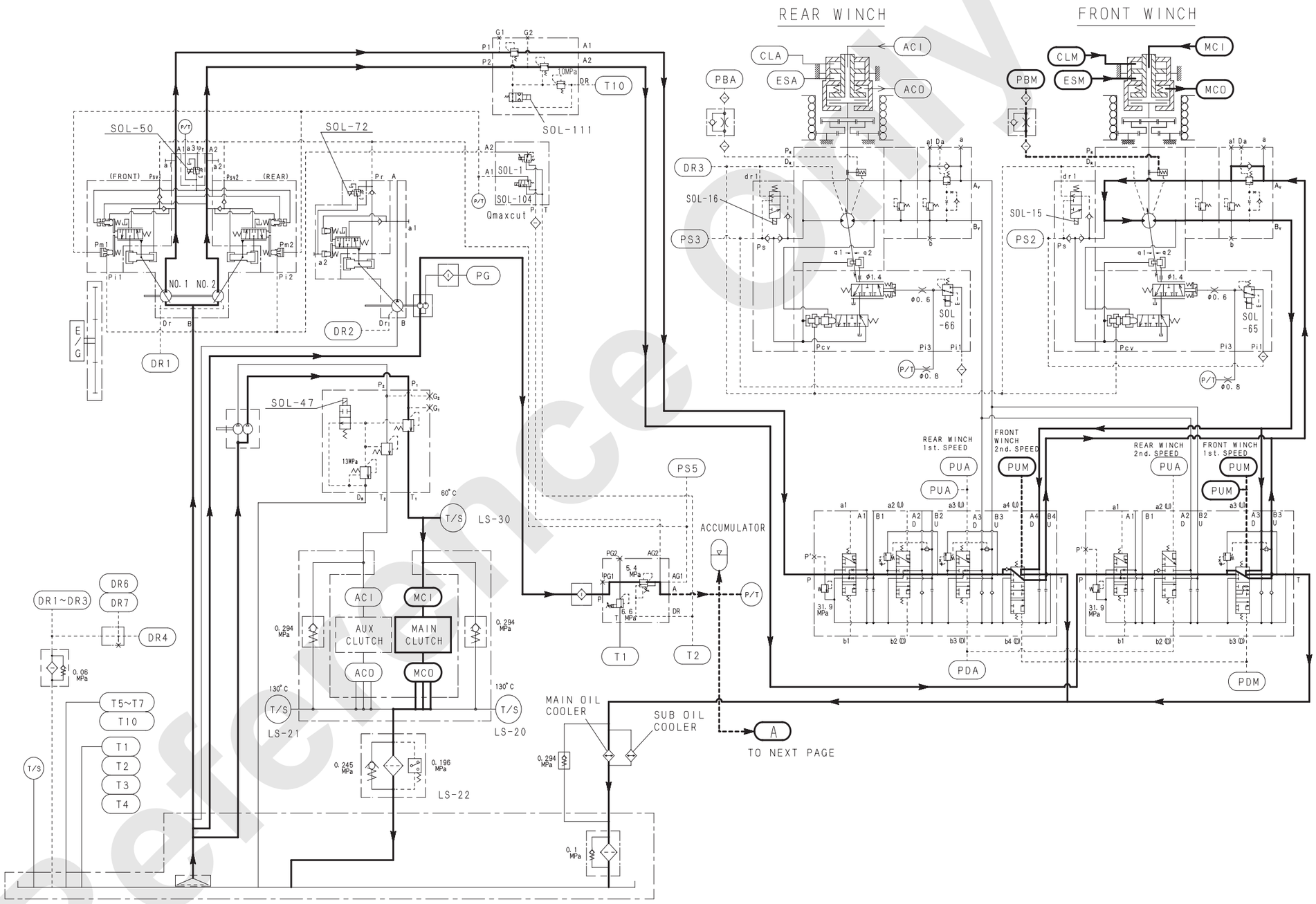

Reference Only

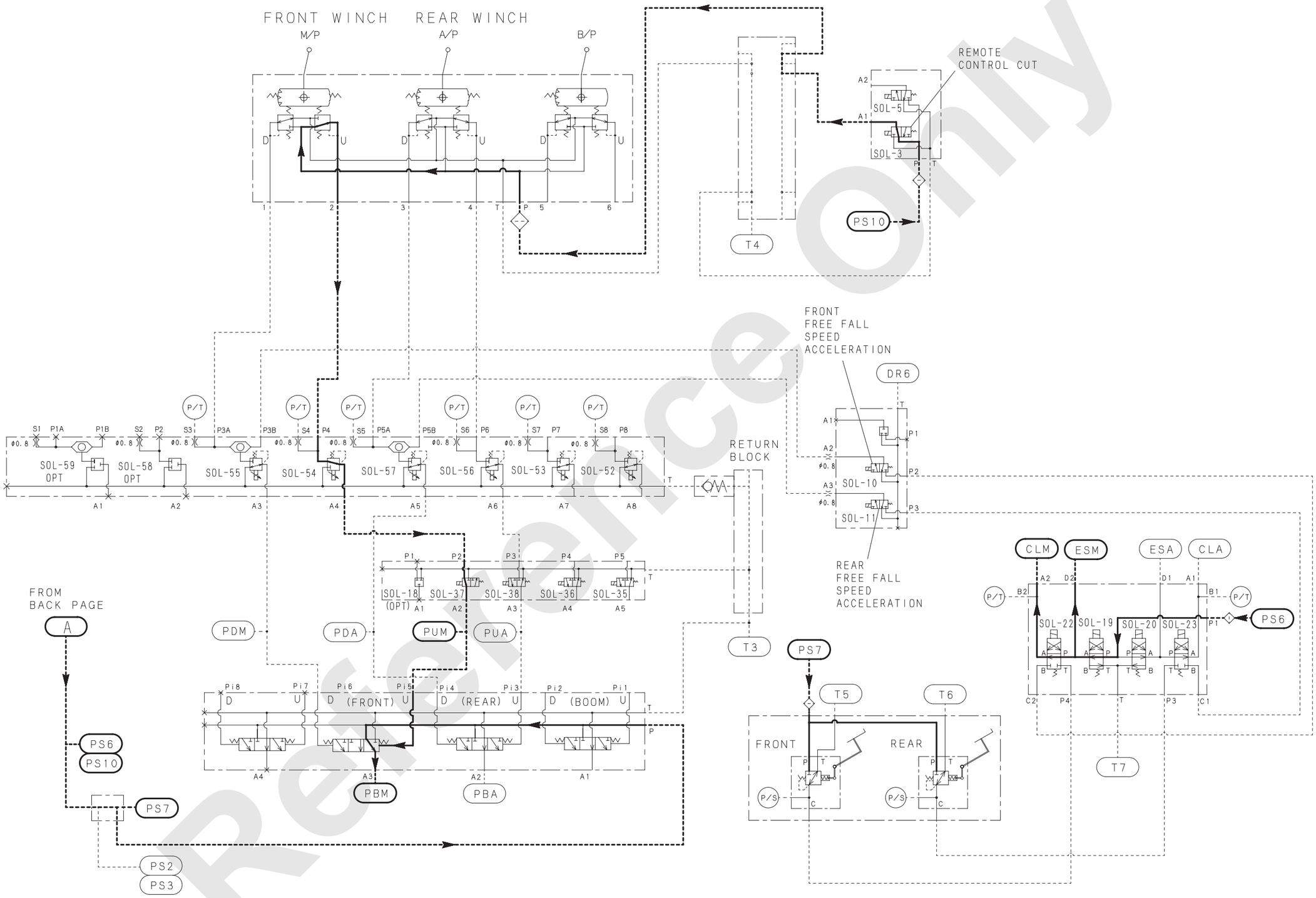

Reference Only

6.2.3 HOLDING A HOISTED LOAD

With the main control lever turned back to its neutral position, the control pressure coming from the remote control valve is cut and the spool in the main control valve returns to its neutral position.
When the spool returns to neutral, the pressurized oil to the main motor is cut off and the motor stops.
Now, although the weight of the suspended load continues to pull on the drum, further rotation of the drum is prevented by a motor counterbalance valve that blocks the return of oil to the hydraulic tank.

At the same time, the control oil pressure in the motor brake cylinder is directed back to the hydraulic tank and the motor brake (nega-brake) actuates.
The pressurized oil is fed to the both sides oil chambers of the clutch cylinder (“CLM”, “ESM”), and the cylinder thrust force by the pressurized oil is not generated.
Therefore, the clutch remains engaged with the spring.
The load is now held in suspension by the combined effects of the motor counterbalance valve, the motor brake and the clutch.

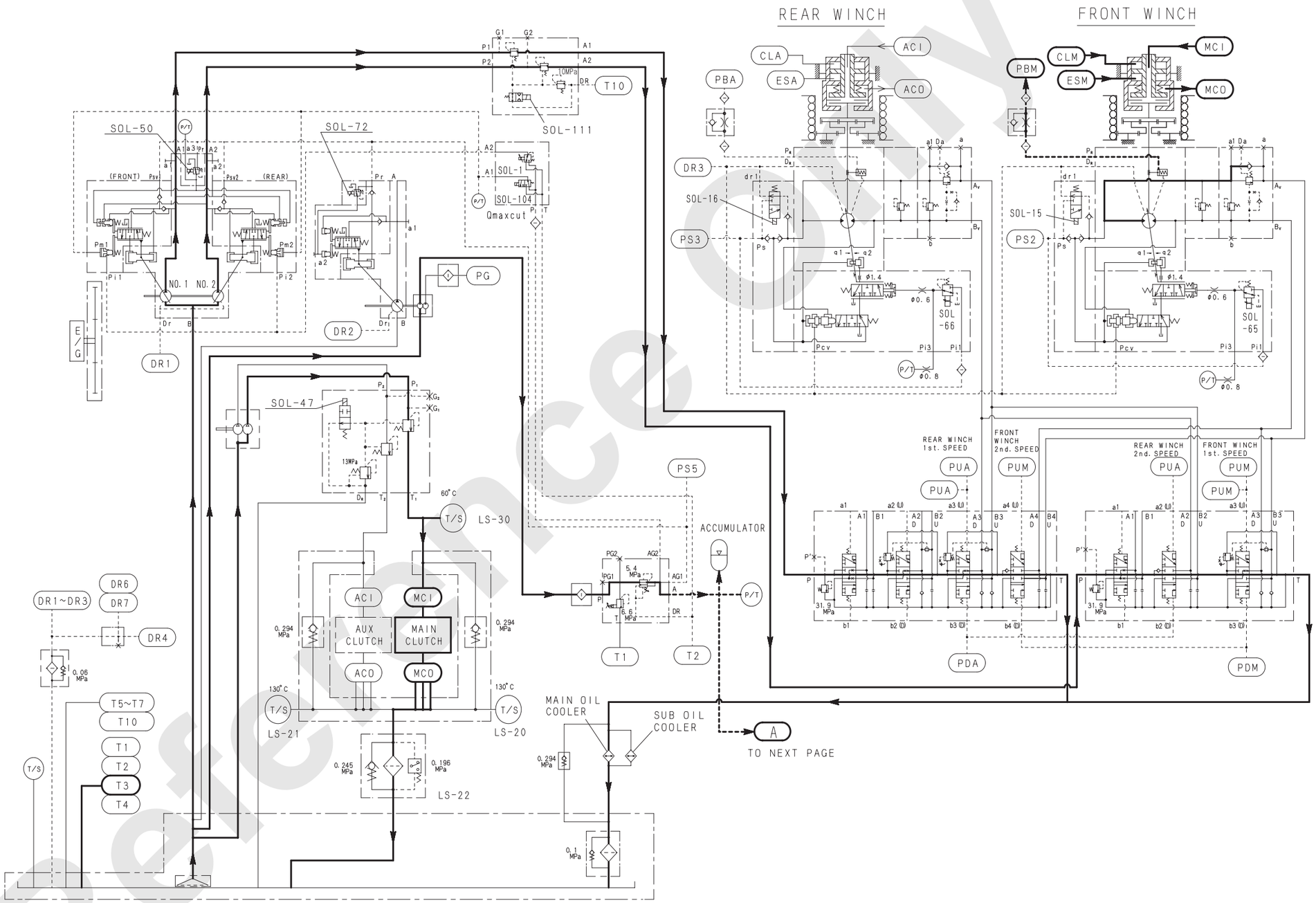

Reference Only

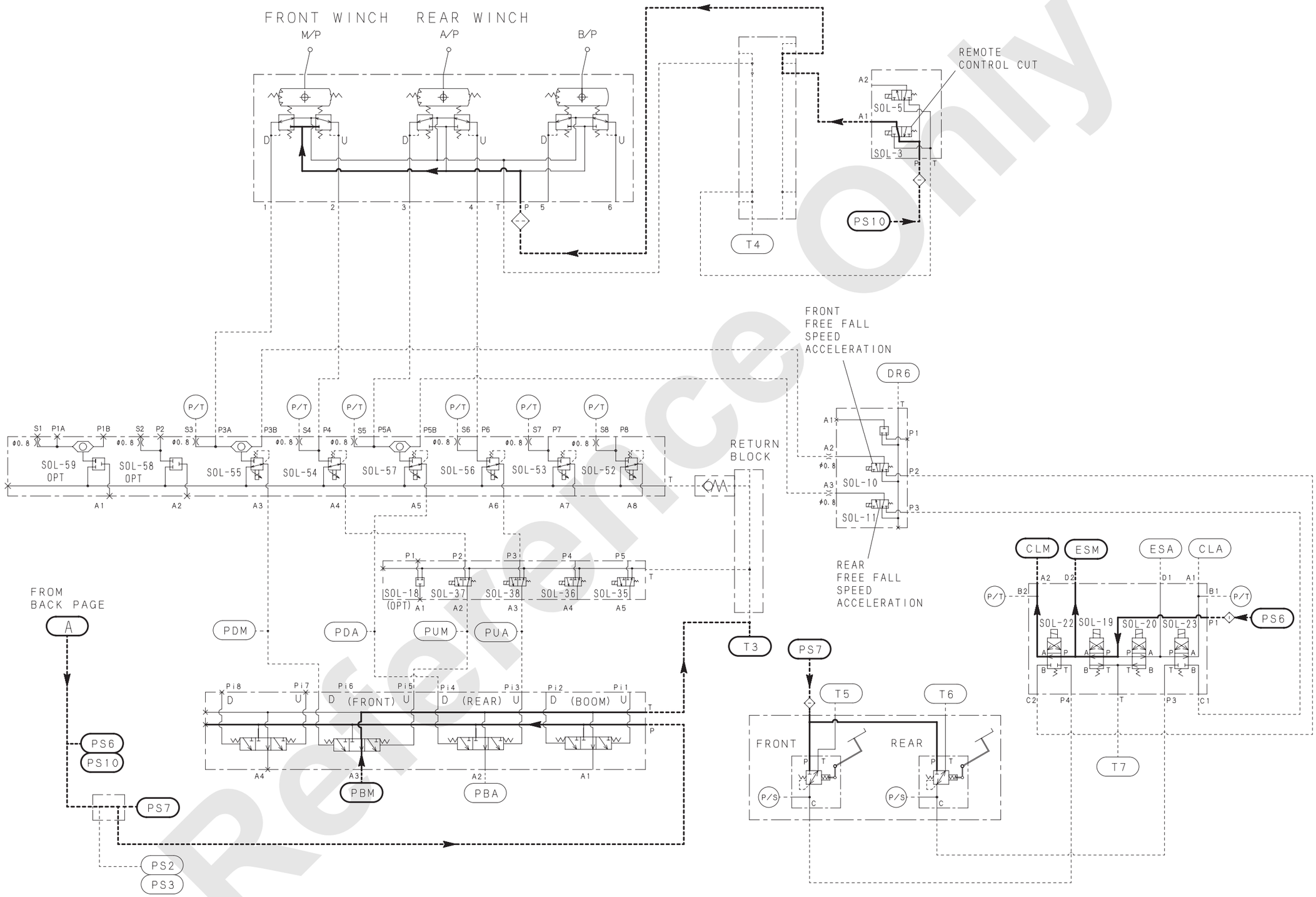

Reference Only

6.2.4 LOWERING A LOAD (POWER LOWERING)

Pressurized oil from the main pump (No.1, No.2) flows through the main control valve and transmitting the power to the front drum lowering system.

When the function lock lever is in the “WORK” position (SOL-3 : “ON” position), oil pressure from the control pump flows to the accumulator and into the foot brake valve block, the clutch valve block, brake valve block (4-section pilot operated valve) and flows through the valve block (2-section solenoid valves) and into the remote control valve.
The pressurized oil is fed to the both sides oil chambers of the clutch cylinder (“CLM”, “ESM”) via the clutch valve block (4-section solenoid valves).
Since the cylinder thrust force by the pressurized oil is not generated, the clutch is engaged with the spring.
When the main control lever is operated to the “lower load” direction, this control oil pressure is directed by the remote control valve to flow into the port “PDM” of the main control valve and it moves the spool.

At the same time, control pressure is also directed through the brake valve block (4-section pilot operated valve) to the “PBM” port of the motor brake cylinder.
It causes the motor brake to disengage.
Now the main pump (No.1, No.2) oil flowing into the control valve, as directed by the position of the spool, activates the hoist motor to drive the drum and thereby lower the load.
The counterbalance valve is opened by pilot pressure from the “running in” side to allow the main motor to rotate and lower the load.

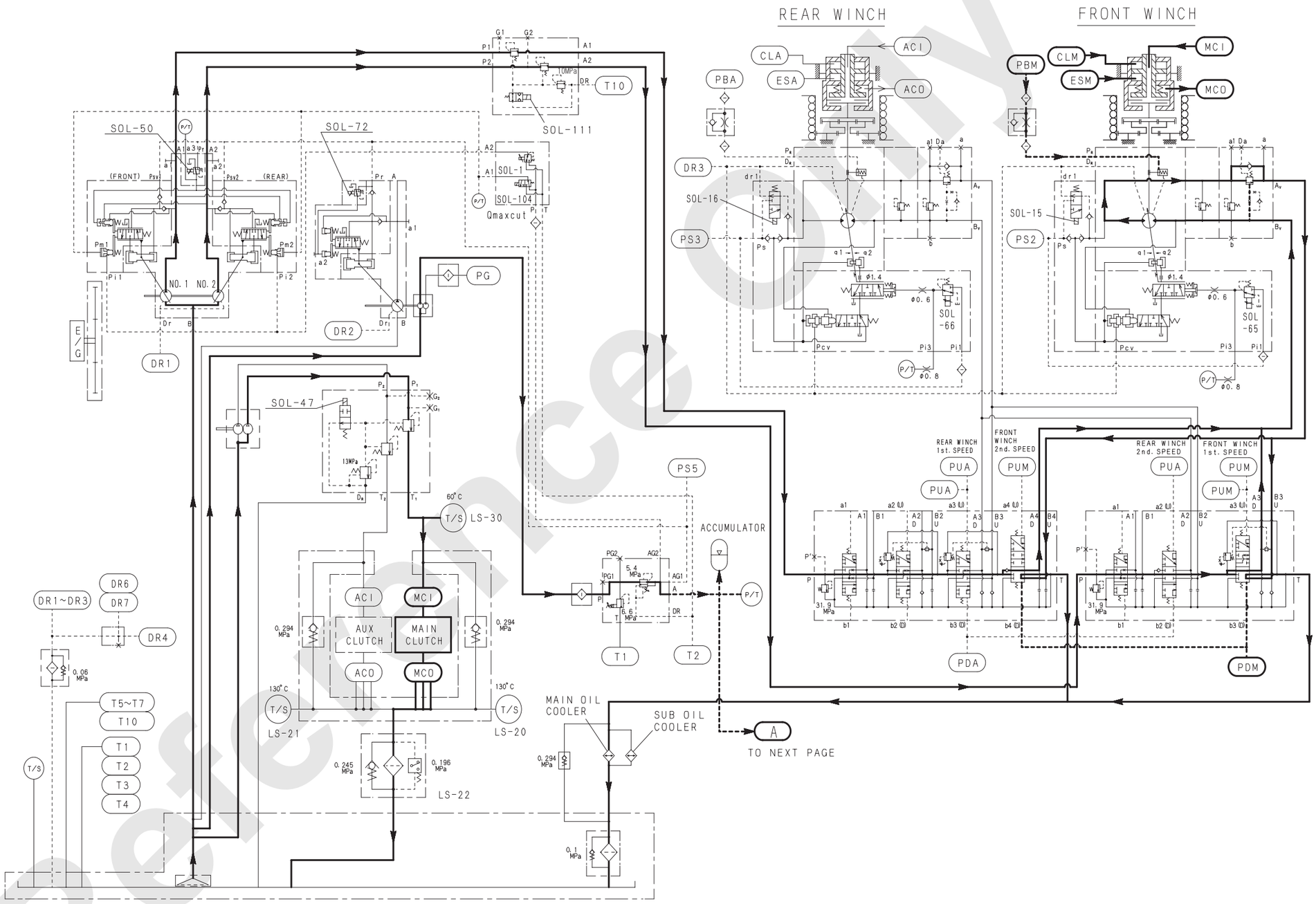

Reference Only

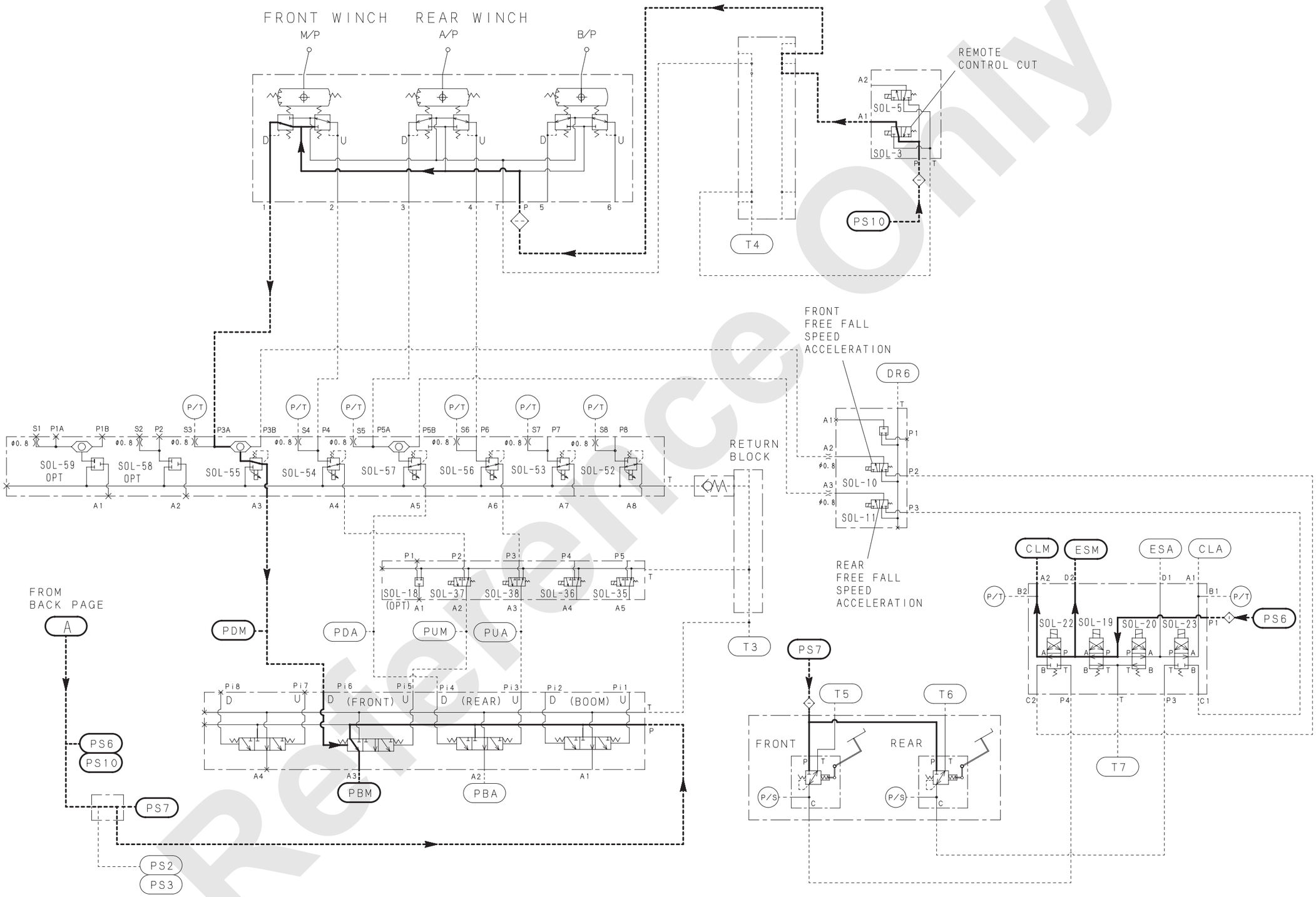

Reference Only

6.2.5 FREE FALL OPERATION

FREE FALL

When the brake select switch for front drum is set to the “FREE FALL” side, the solenoid valve (SOL-22) in the clutch valve block (4-section solenoid valves) is switched over.
When the solenoid valve is switched over and the front drum foot brake is released, the pressurized oil in the “CLM” side oil chamber of the front drum clutch cylinder returns to the tank, and the cylinder thrust force is generated against the spring to release the clutch.
As a result, the load falls freely (free fall), and the brake can be applied with the foot brake.

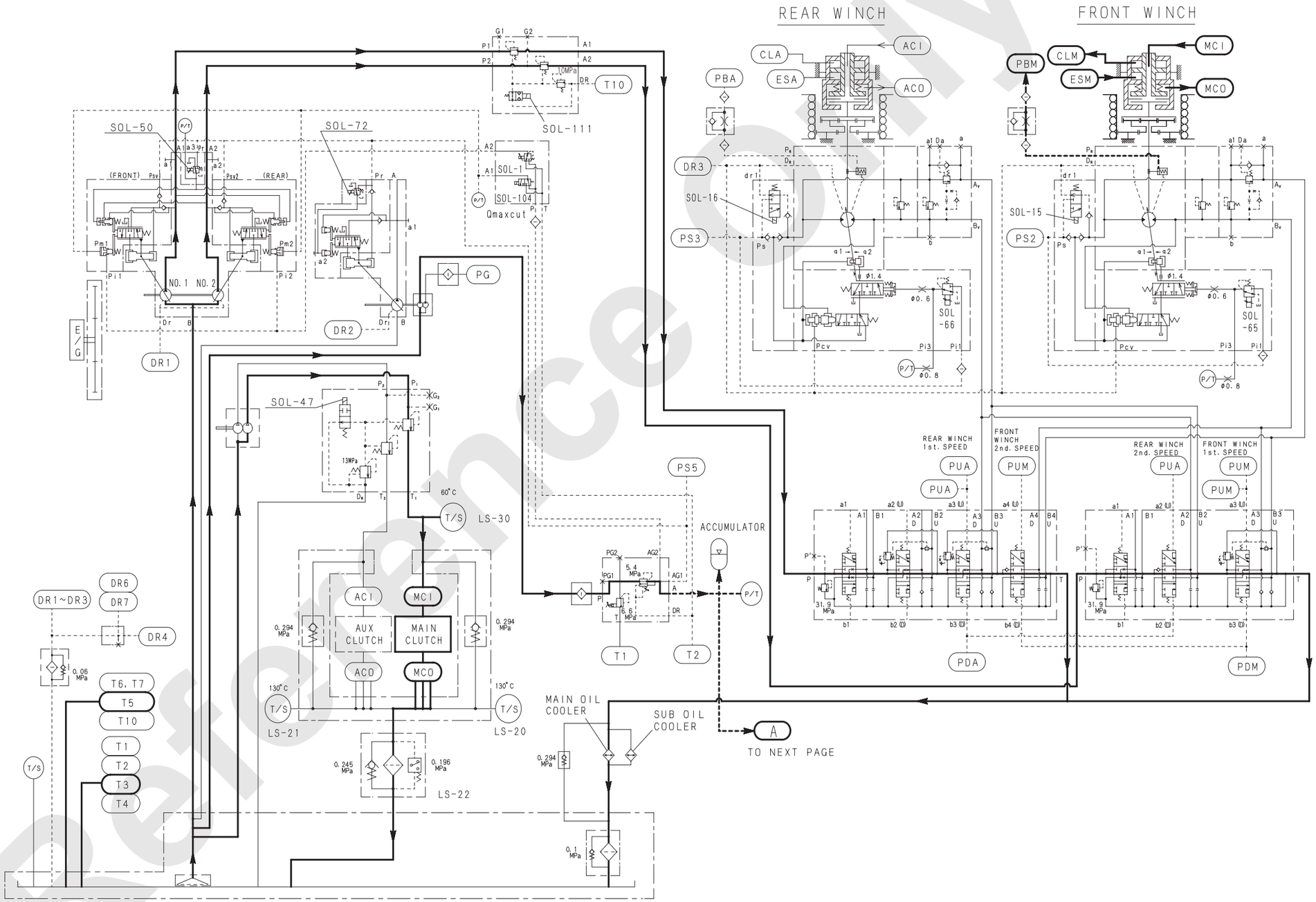

Reference Only

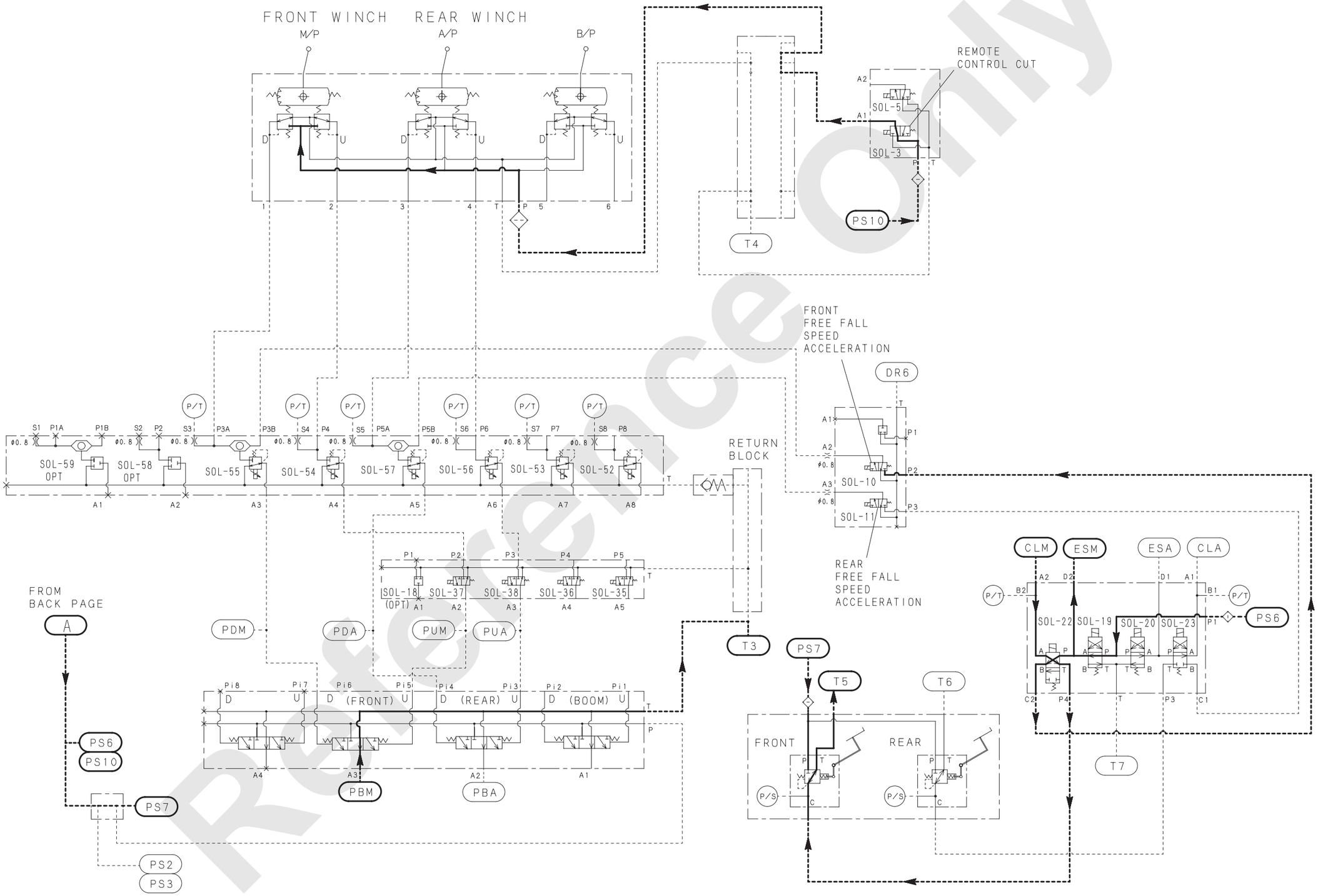

Reference Only

BRAKING

When the brake pedal is operated, the control pressurized oil flows into the “CLM” side oil chamber of the clutch cylinder through the front drum foot brake valve, and the cylinder thrust force is increased to actuate the brake (braking with the clutch).

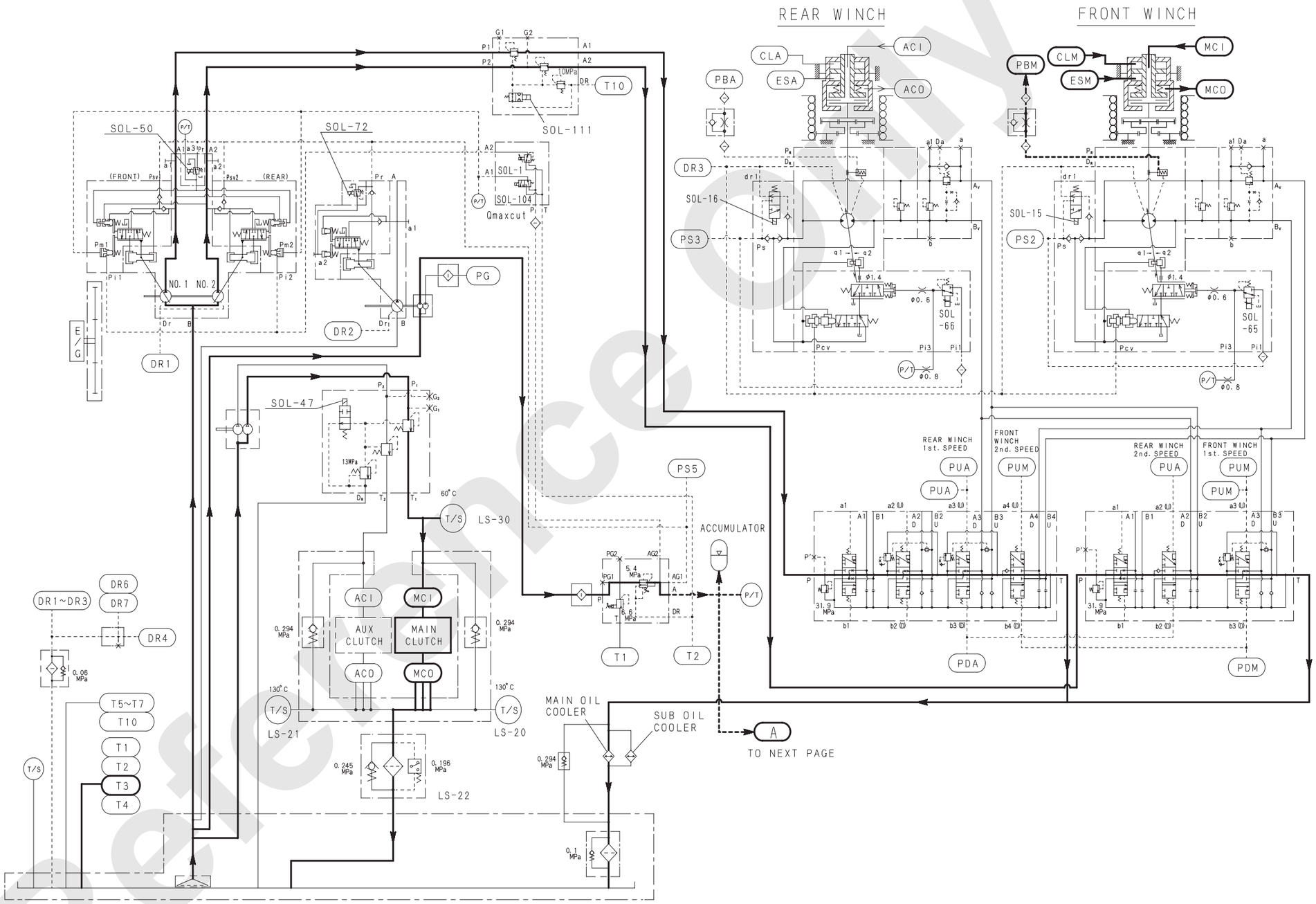

Reference Only

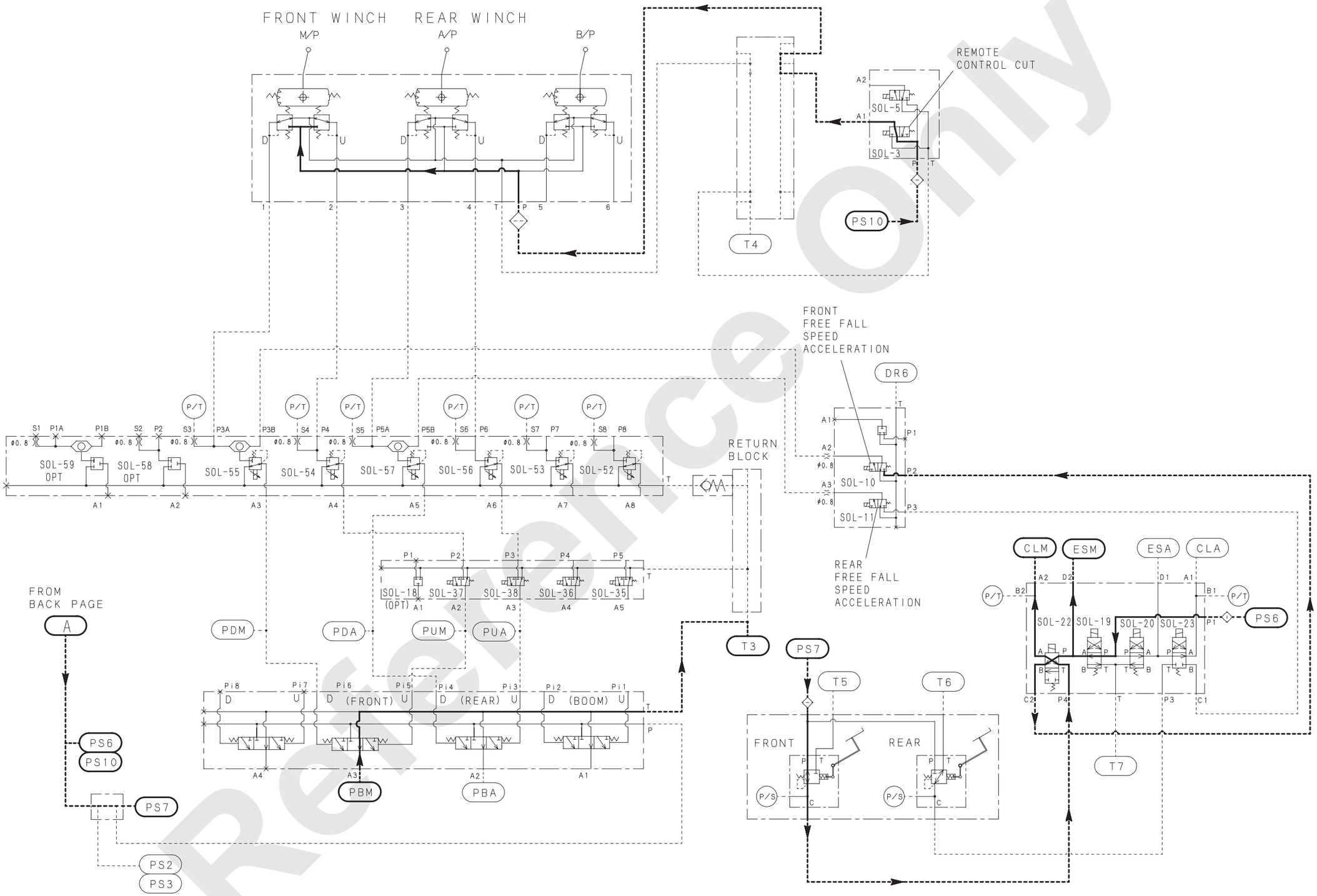

Reference Only

FREE FALL ACCELERATION

Free fall with the “FREE FALL SPEED SELECT SWITCH” on the left upper switch panel set to the “HIGH” position.

When the free fall speed select switch is turned to HIGH, the solenoid valve (SOL-10) is switched over, and pressurized oil from the clutch valve block (4-section SOL) flows into the “PDM” port of the main control valve through the shuttle valve and solenoid proportional valve (SOL-55) to move the spool.

At the same time, the oil also goes into the brake cylinder “PBM” port of the winch motor through the brake valve block (4-section pilot operated valves) to release the motor brake.
Then, the motor rotates to the lowering direction.
Though the clutch is released while the “FREE FALL” mode is selected and the foot brake is released, the rotation of the winch motor is transmitted to the drum, and the free fall speed is increased by the power lowering, because the rotation resistance of the clutch is larger than that of the drum.
In this status, the drum can rotate without any load.

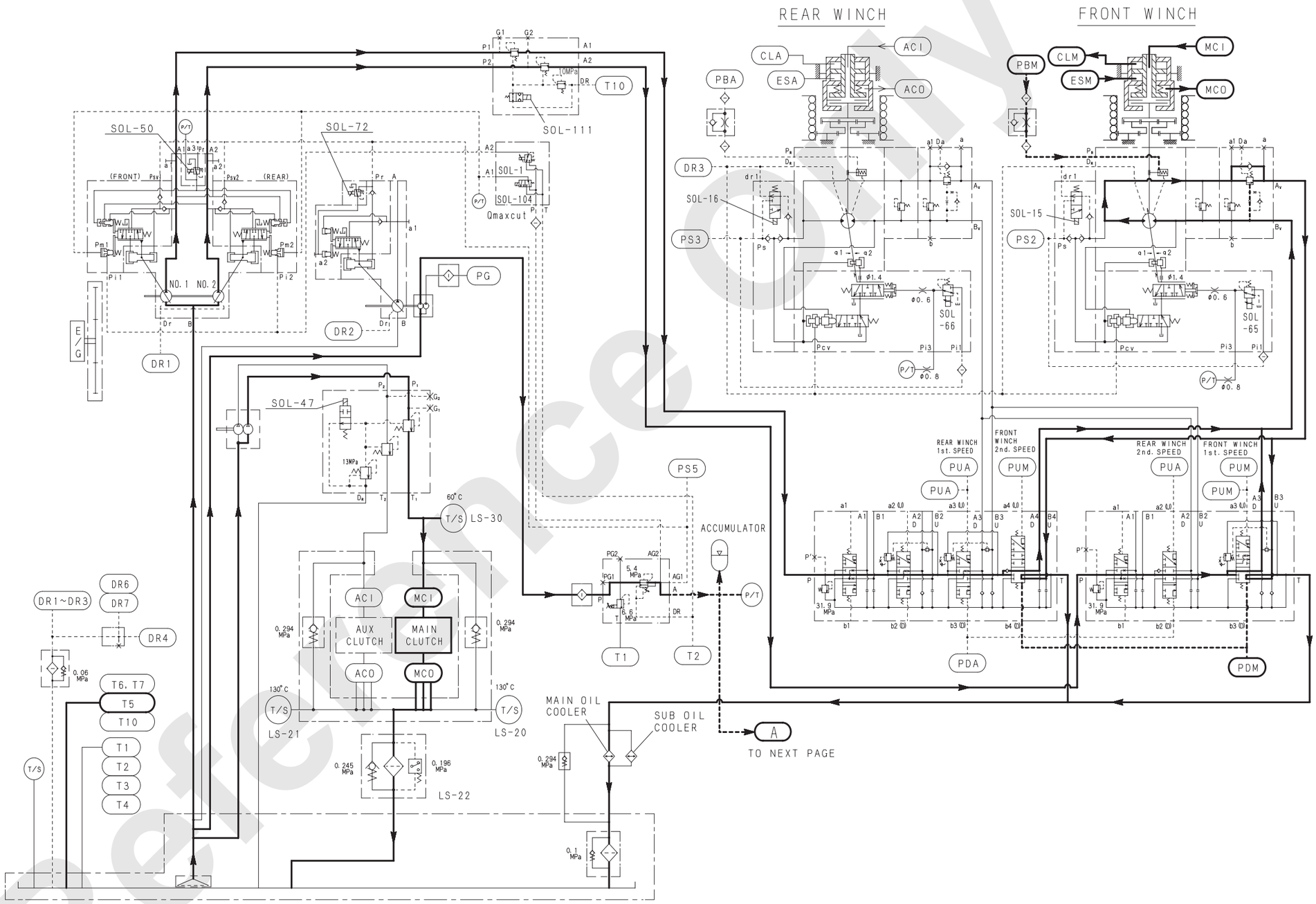

Reference Only

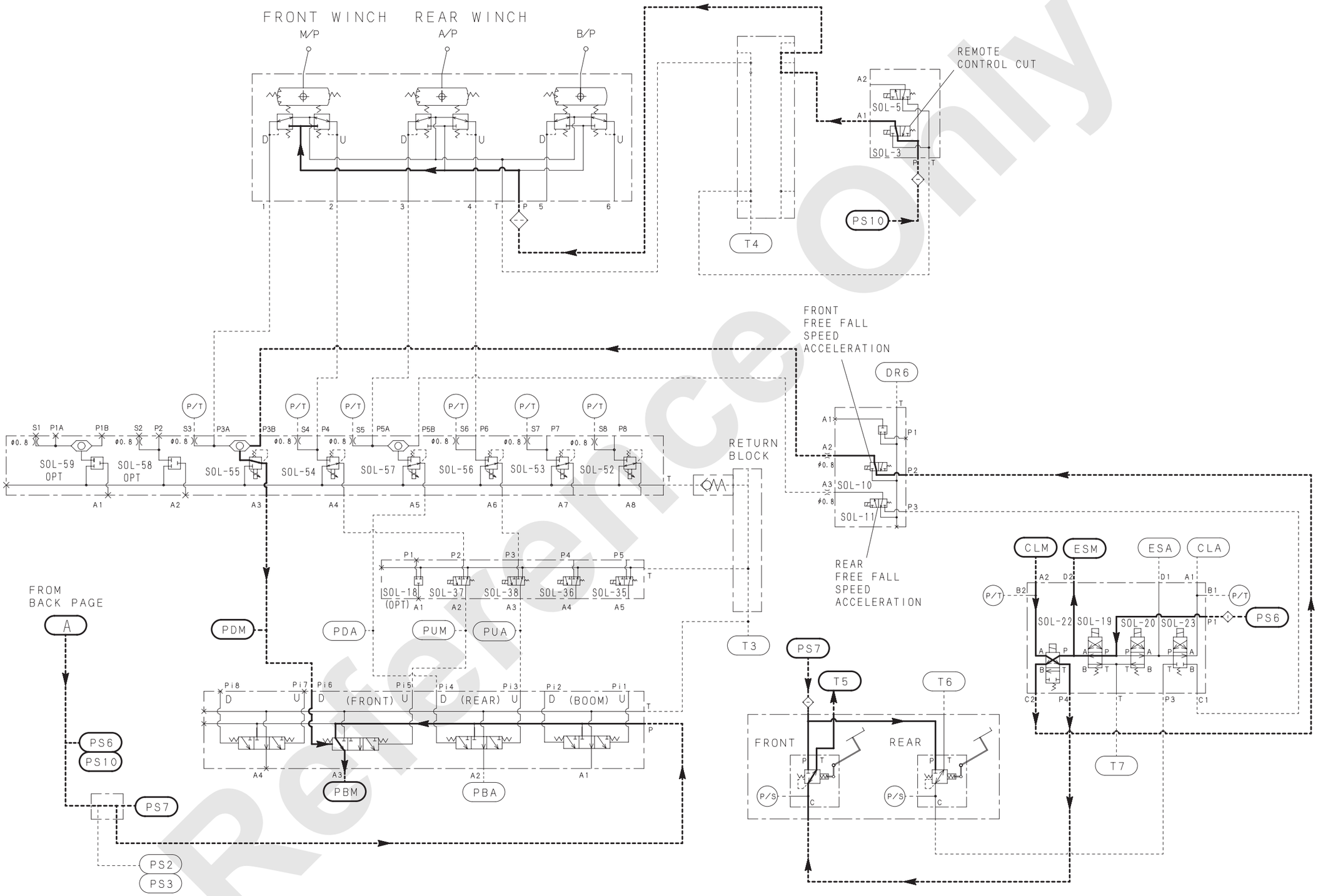

Reference Only

BRAKING WHILE FREE FALL ACCELERATION

When the brake pedal is depressed, pressurized oil is fed to the “CLM” side of the clutch cylinder through the front drum foot brake valve.
Then, the cylinder thrust force is decreased to slow down the free fall speed, and the control pressure from the solenoid valve (SOL-10) in the 3-section valve block is also decreased by the proportional valve (SOL-55) and the solenoid valve (SOL-10) to return the main control valve spool to the neutral position.
When the spool is returned to the neutral position, pressurized oil to the motor is shut off, and the main motor stops rotating.

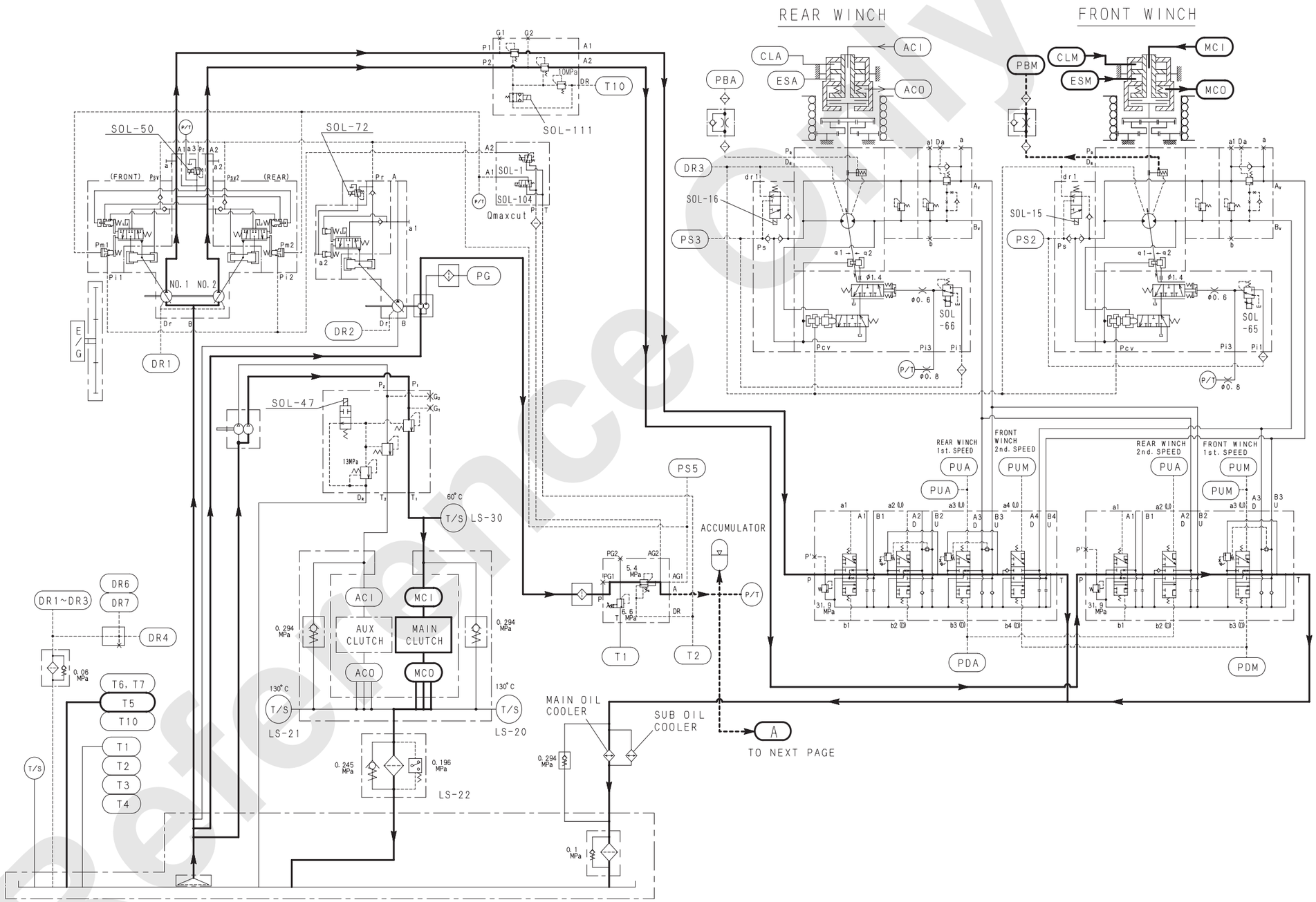

Reference Only

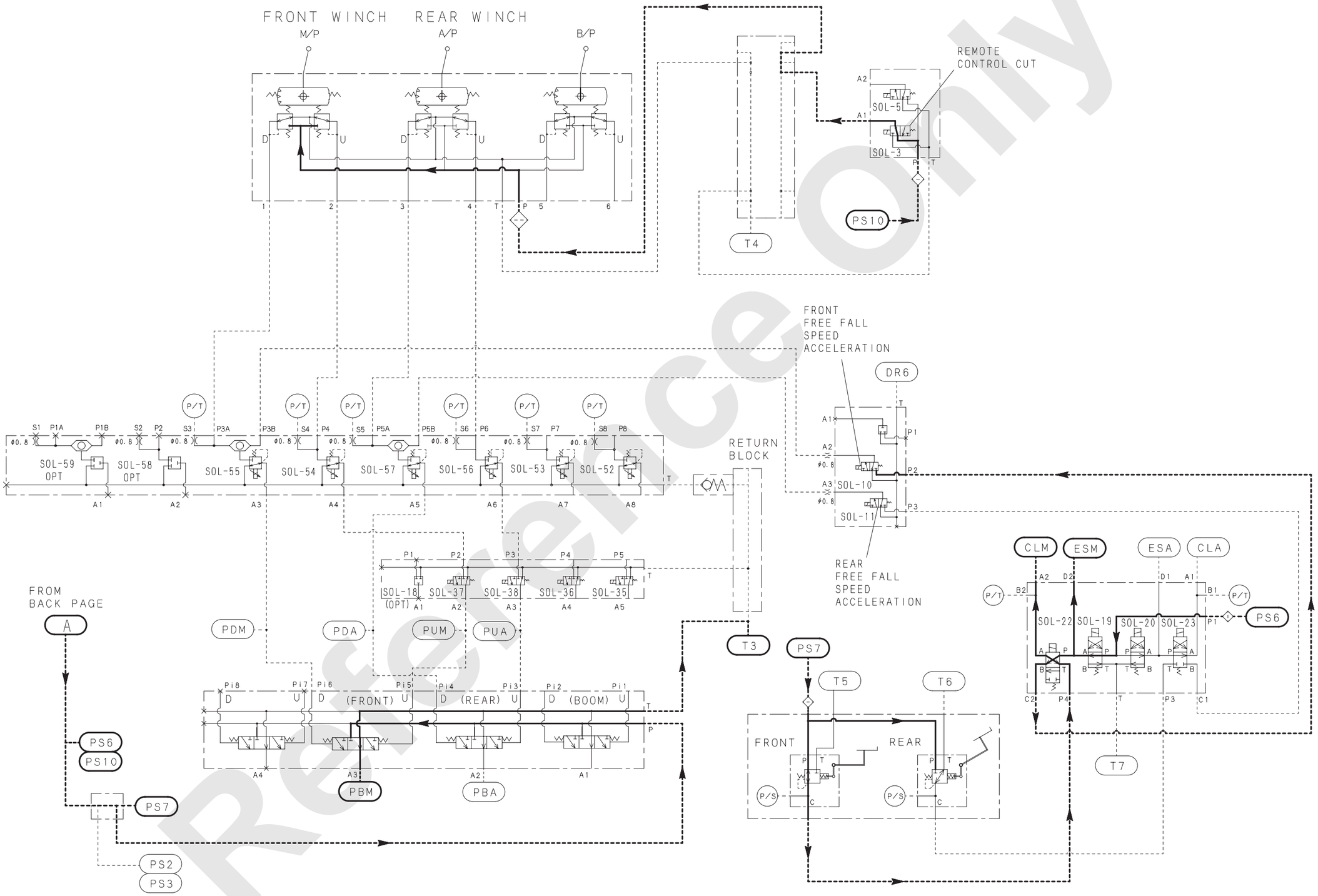

Reference Only

6.2.6 G WINCH MODE LIFTING

Refer to “ELECTRIC CONTROL” for condition of switching over to G winch mode.
Function of the front drum and the rear drum are exactly same.
The front drum is explained here as an example.

The function of respective parts for G winch mode is same as “6.2.2 LIFTING A LOAD”.
In addition to these, the control pressure from a proportional solenoid valve SOL-65 will be output to the motor for minimum capacity (Minimum displacement for G winch) to create the G winch mode.

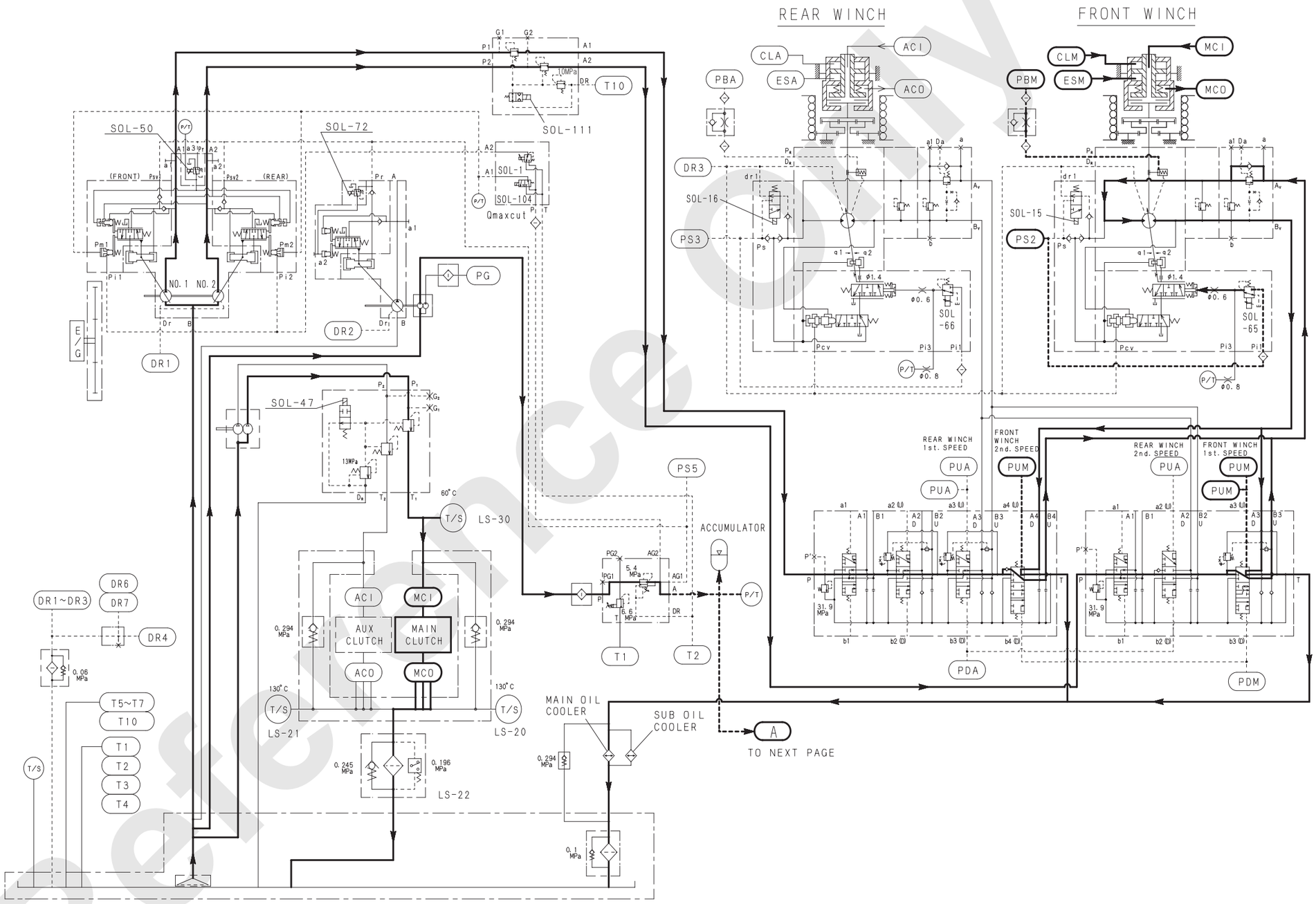

Reference Only

6.2.7 G WINCH MODE LOWERING

Refer to “ELECTRIC CONTROL” for condition of switching over to G winch mode.
Function of the front drum and the rear drum are exactly same.
The front drum is explained here as an example.

The function of respective parts for G winch mode is same as “6.2.4 LOWERING A LOAD (POWER LOWERING)”.
In addition to these, the control pressure from a proportional solenoid valve SOL-65 will be output to the motor for minimum capacity (Minimum displacement for G winch) to create the G winch mode.

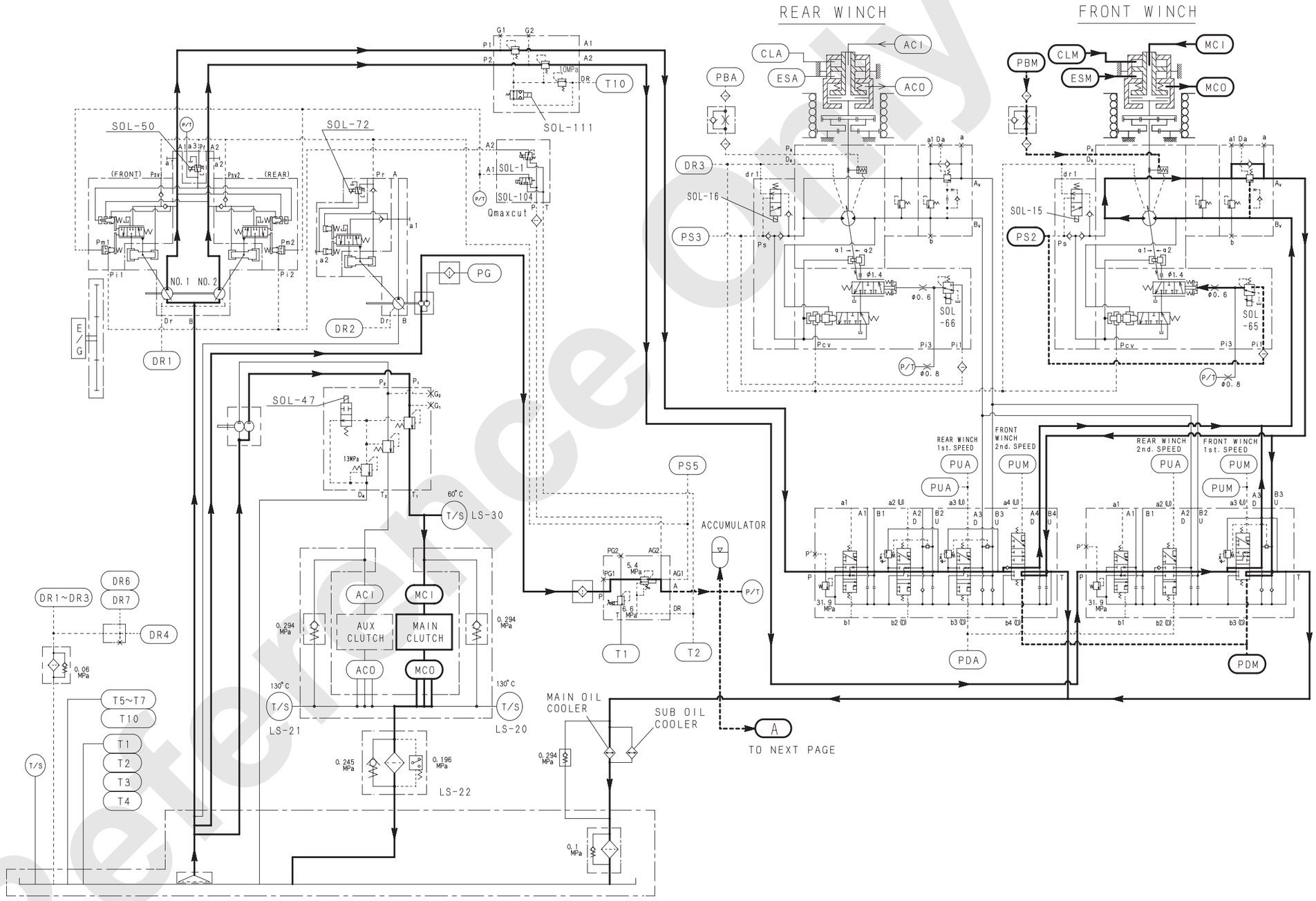

Reference Only

6.3 WINCH

6.3.1 WINCH INSTALLATION

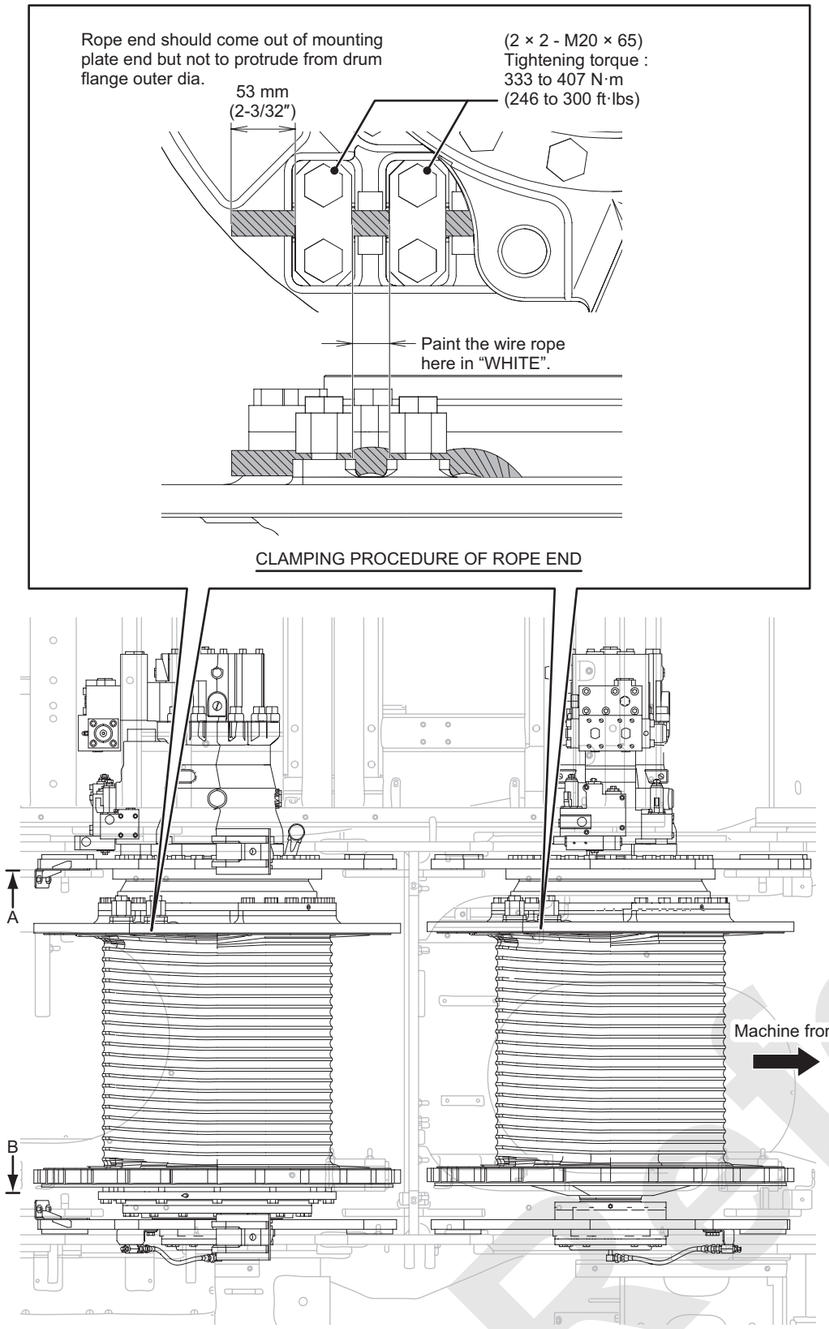

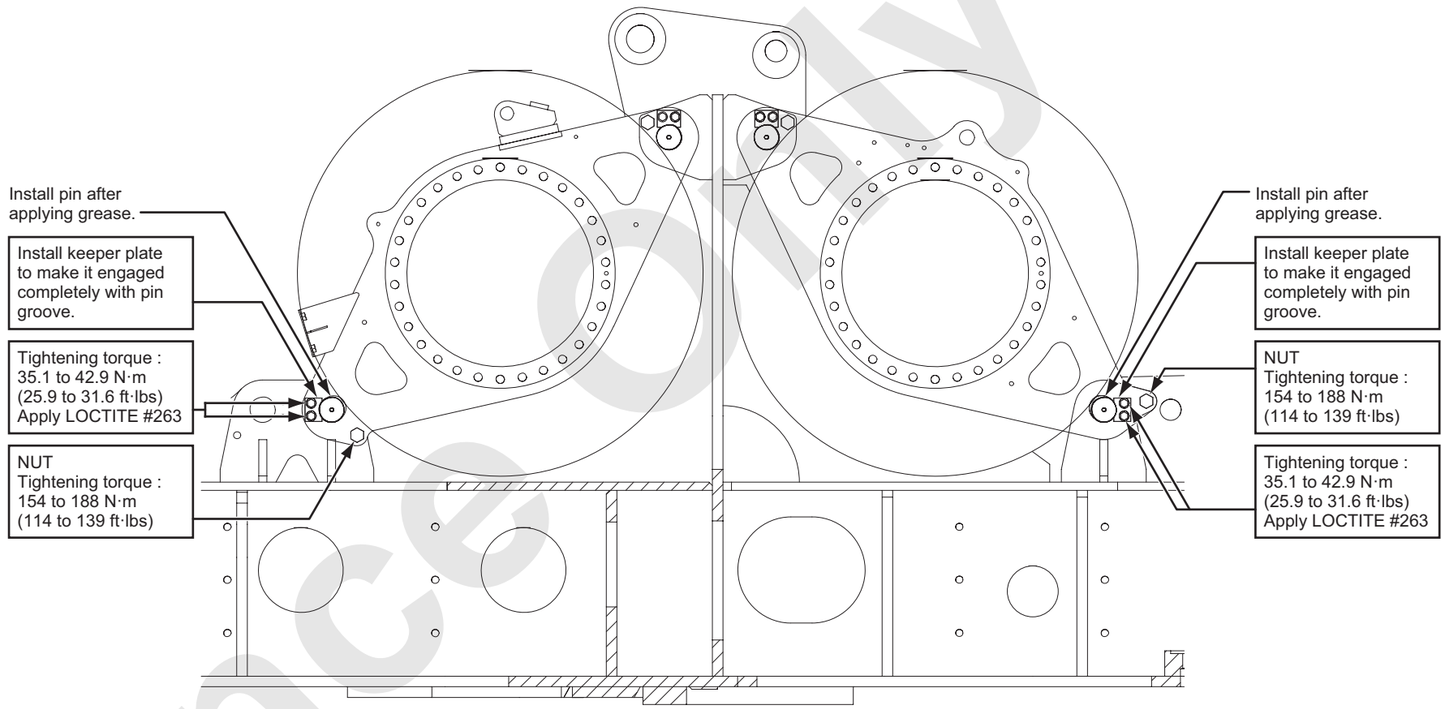

Section A-A

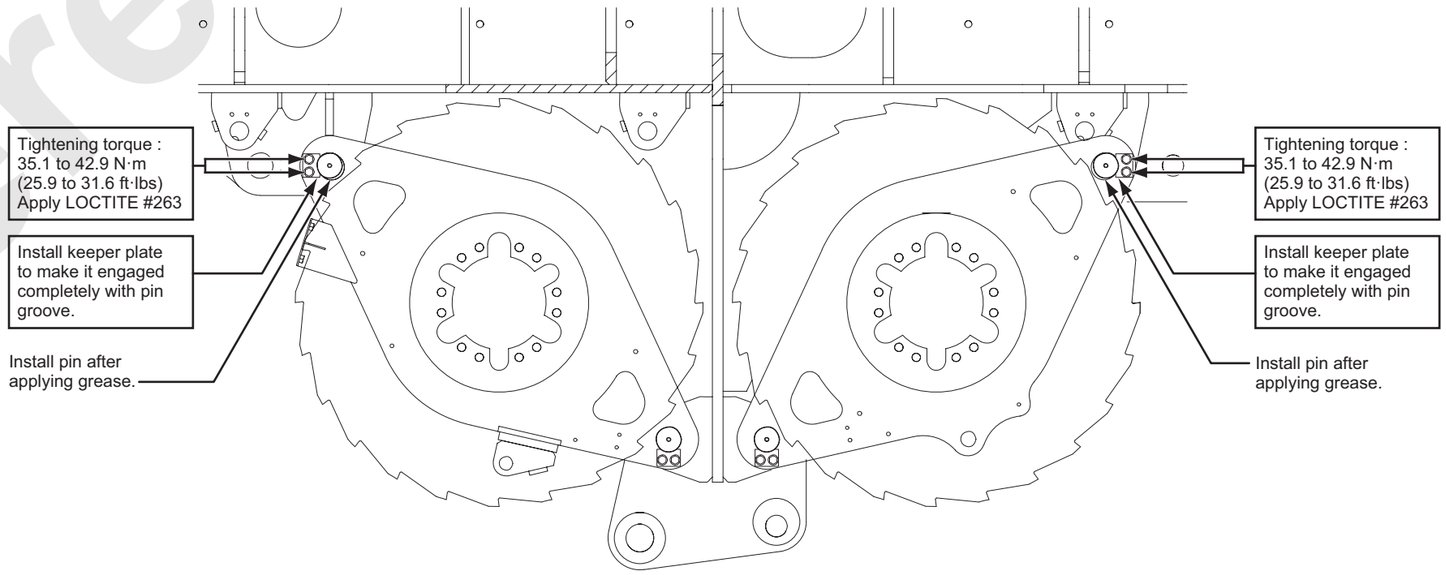

Section B-B

Reference only

6.3.2 WINCH ASSEMBLY

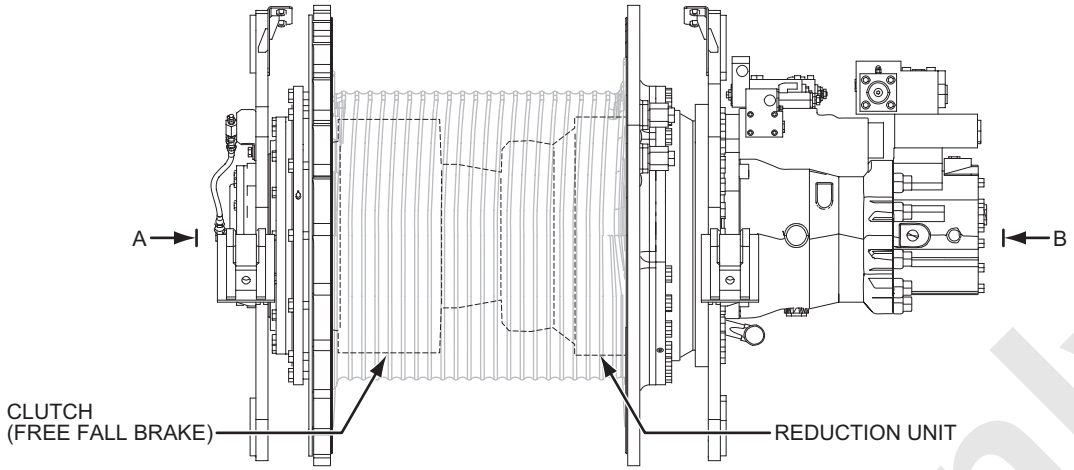

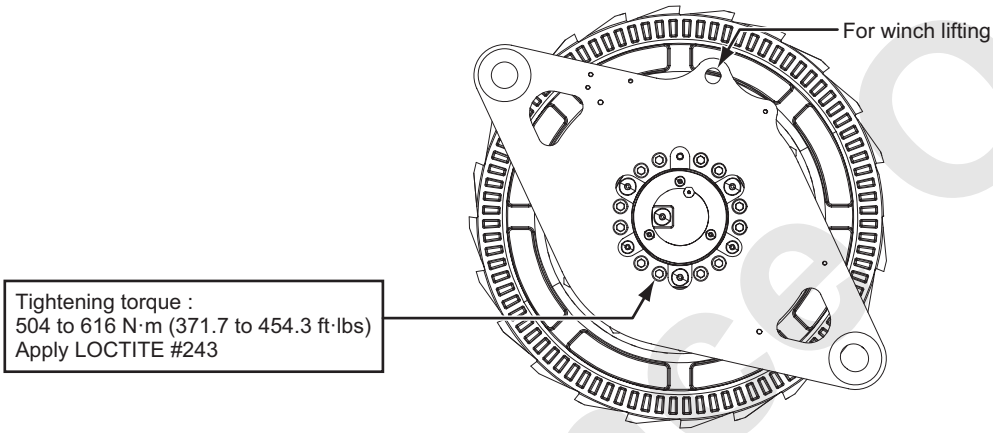

View from A

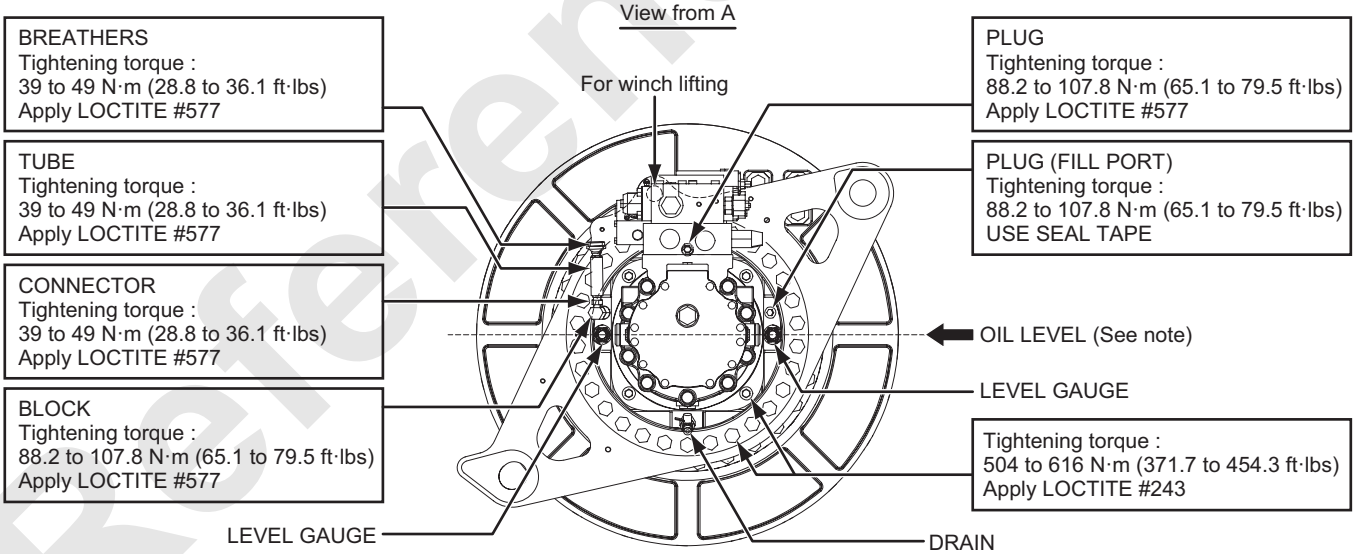

View from B

Note

After assembly, fill oil to the specified level. (Approx. 22 L [5.8 gal])
Higher than level gauge red point and within the oil.
Extreme pressure gear oil SAE #80W-90 (APOLOIL GEAR HE MULTI-SPECIAL).

Reference Only

6.3.3 REDUCTION UNIT ASSEMBLY

1. On mating surface, apply LOCTITE #515 on inner face of sleeve and both of outer periphery surfaces of the press fit in assembling.

2. Apply 1 coat painting before winch drum is installed.
   But except machining face.
   As for paint and film thickness, follow KSC00H50Z003.

   After assembling is completed, press the 1st sun gear into the reduction unit by tapping it lightly and confirm that it turns easily.

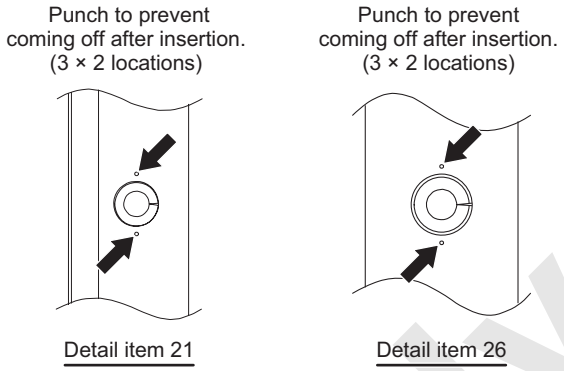

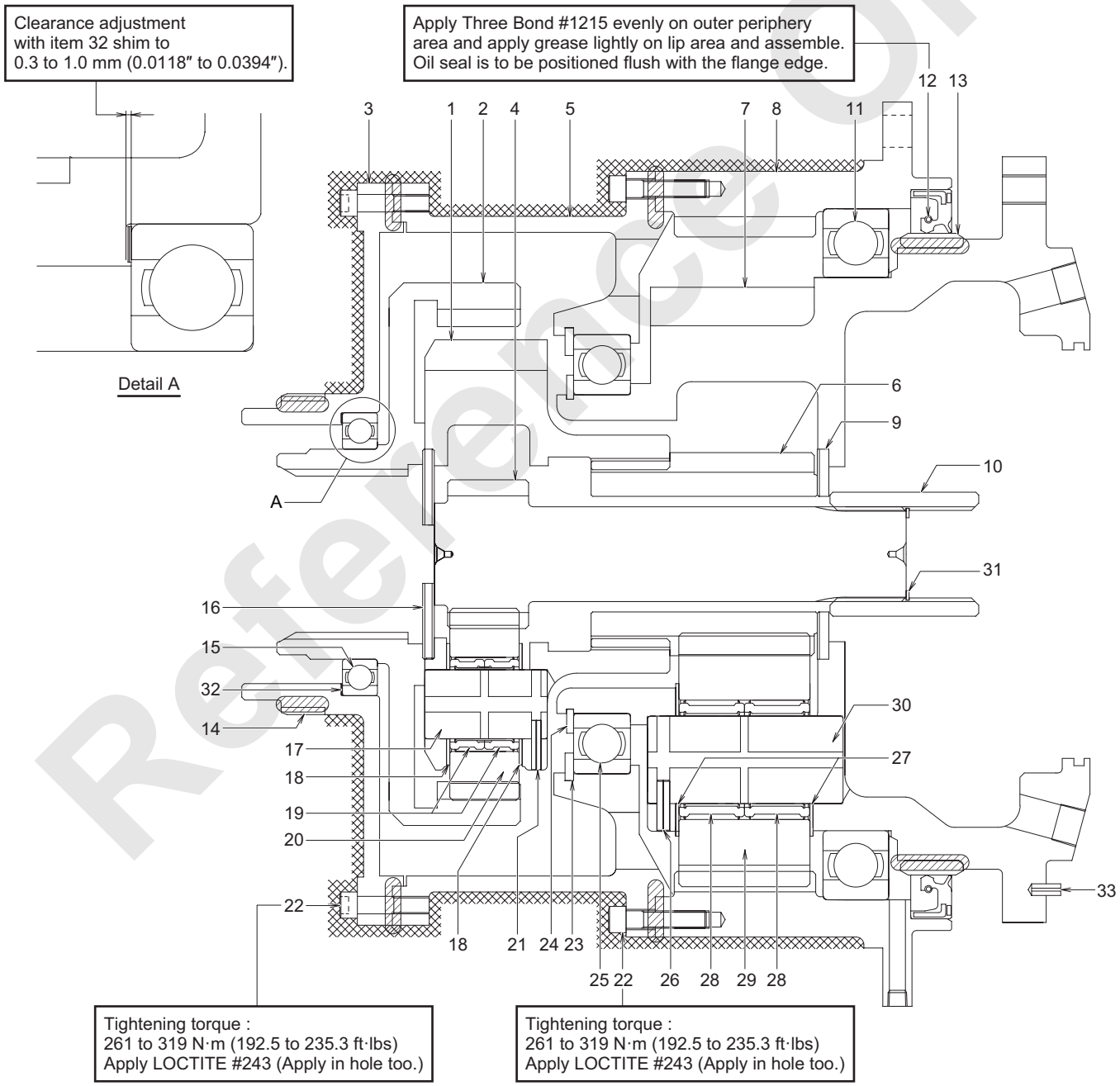

Reference Only

1. Spider
2. Gear ring
3. Retainer
4. Sun gear
5. Support housing
6. Sun gear
7. Support
8. Ring gear
9. Spacer
10. Collar
11. Bearing
12. Oil seal
13. Sleeve
14. Sleeve
15. Bearing
16. Spacer
17. Pin
18. Thrust washer
19. Bearing
20. Pinion
21. Spring pin
22. Bolt
23. Snap ring
24. Snap ring
25. Bearing
26. Spring pin
27. Thrust washer
28. Bearing
29. Pinion
30. Pin
31. Snap ring
32. Shim
33. Pin

Reference Only

6.3.4 ADJUSTMENT OF DRUM LOCK

WARNING

Do not adjust the drum locks until the boom and hook block have been lowered to the ground.
Failure to observe this precaution may result in a serious injury or loss of life.

1. Pull the drum lock knob in the lock position and check to see that the pawl is engaged in the bottom of the drum ratchet.
   If the pawl is not engaged in the bottom of the ratchet, adjust the spring length to allow the pawl to be engaged.

2. With the release position, adjust the respective dimension as shown in the figure to the right.

3. Push the drum lock knob in the release position and check to see that the pawl is clear of the ratchet by at least 20 mm (13/16 in.).

4. Operate the knob to the lock position, and to the release position and confirm that the pawl moves smoothly.

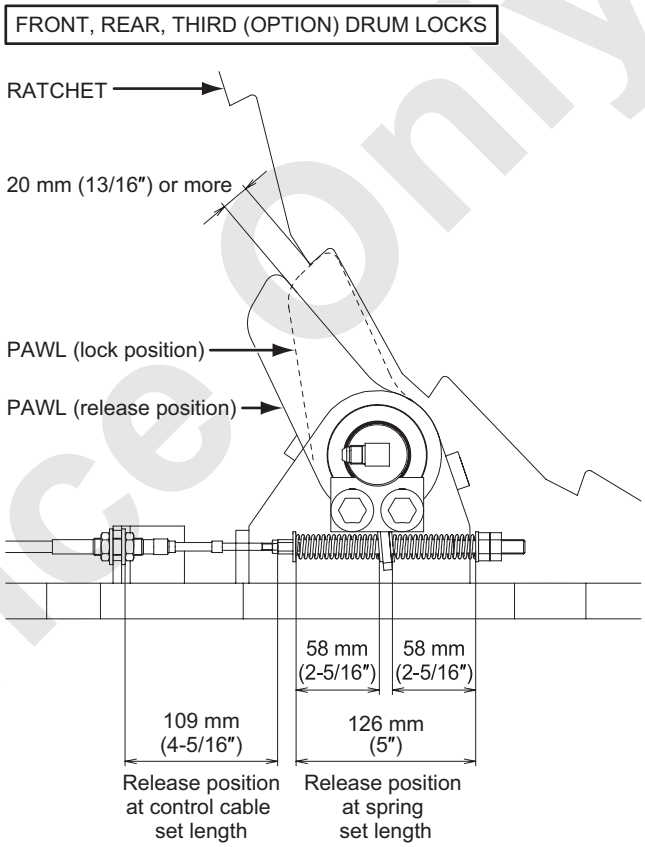

WARNING

Place a signal person to prevent accident from rotating drum.
Failure to observe this precaution may result in a serious injury.

Reference Only

This page is blank for editing convenience.

Reference Only

6.4 BRAKE PEDAL

6.4.1 ASSEMBLY DRAWING

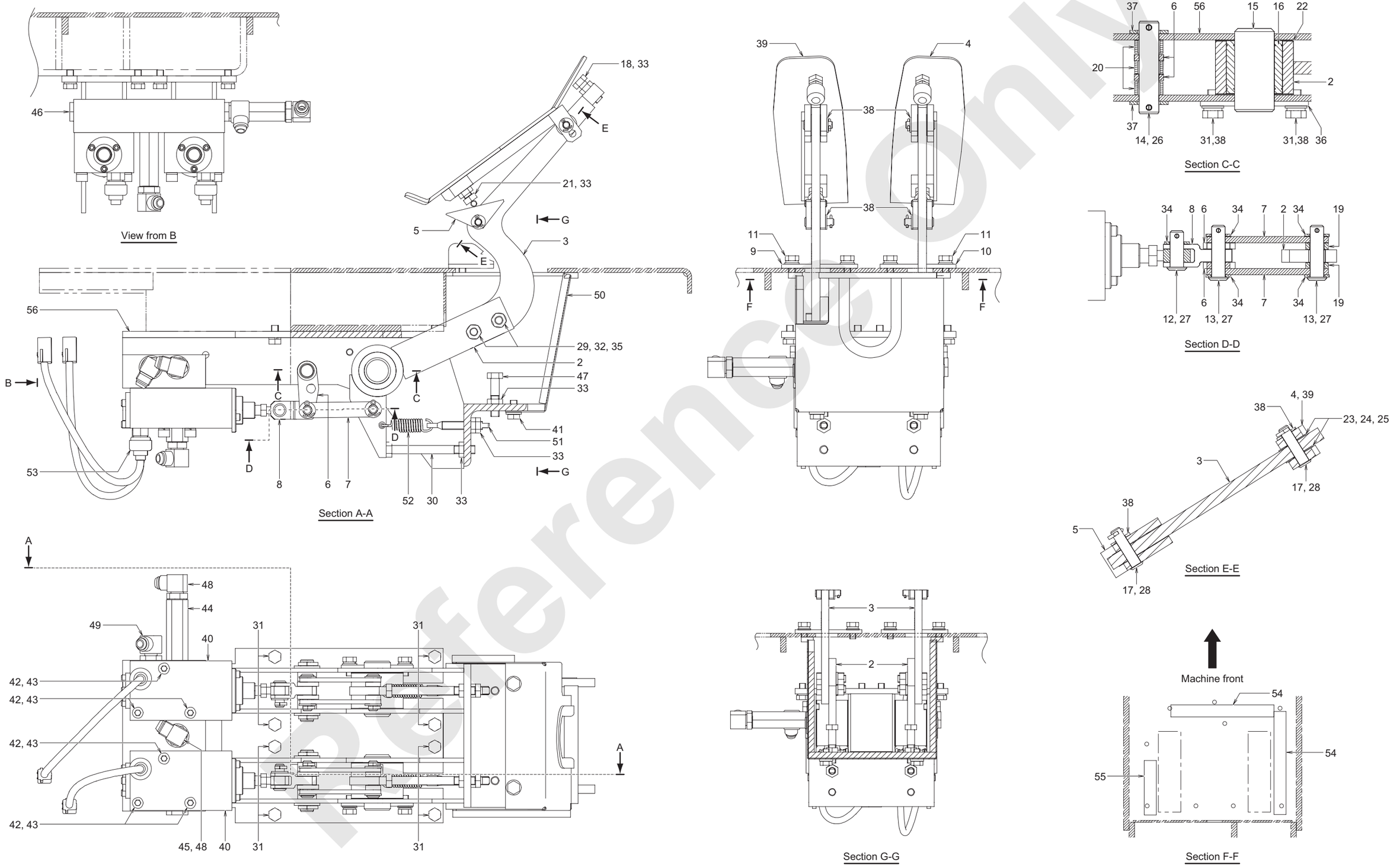

Reference Only

1. Bracket
2. Lever assembly
3. Link
4. Pedal
5. Pawl
6. Link
7. Link
8. Link
9. Bracket
10. Bracket
11. Sems bolt
12. Pin
13. Pin
14. Pin
15. Pin
16. Bearing
17. Pin
18. Bolt
19. Spacer
20. Spacer
21. Bolt
22. Spacer
23. Shim (0.4)
24. Shim (0.6)
25. Shim (0.9)
26. Cotter pin
27. Cotter pin
28. Cotter pin
29. Bolt
30. Bolt
31. Sems bolt
32. Nut
33. Nut
34. Washer
35. Lock washer
36. Plate
37. Washer
38. Washer
39. Pedal
40. Brake valve
41. Sems bolt
42. Capscrew
43. Lock washer
44. Connector
45. Connector
46. Plug
47. Capscrew
48. 90 degrees Elbow
49. 90 degrees Elbow
50. Cover assembly
51. Eye bolt
52. Spring
53. Pressure switch
54. Rubber
55. Rubber
56. Bracket

TIGHTENING TORQUE TABLE

Name	Size	Tightening Torque
29. Bolt	M12 × 40	37.3 to 45.1 N·m (27.5 to 33.2 ft·lbs)
42. Capscrew	M10 × 70	30.4 to 38.2 N·m (22.4 to 28.2 ft·lbs)

- When installing item 16. Bearing, fill in enough amount of grease.
- Apply MOLYKOTE on each rotating area.

Reference Only

6.4.2 ADJUSTING THE BRAKE PEDAL

Adjustment

1. Adjust the eye bolt until the dimension S is 53 mm (2-3/32 in.).

2. Depress the brake pedal until the valve spool reaches the stroke end.
   (Dimension S = 37.5 mm [1-8/16 in.])

3. Bring the (47) capscrew into contact with the (2) lever assembly in the status described in the 2 above, and loosen 3/4 turn (protrude upward) to adjust the dimension S until it is 38 mm (1-8/16 in.) to 38.3 mm (1-8/16 in.).
   Then, tighten the nut.

4. Raise the (2) lever assembly up, and return the valve spool to the neutral position.
   (Dimension S = 53 mm [2-3/32 in.])
   Bring the (30) bolt into contact with the (2) lever assembly, and loosen 3/4 turn (protrude left).
   Then, tighten the nut.
   (Dimension S =
   52.3 to 52.5 mm [2-3/32 to 2-1/16 in.])

5. Adjust the (52) spring until the dimension L is 70 mm (2-6/8 in.) in the status described in the 4 above.

6. Ensure that the effective stroke of the (40) valve from the time when the pedal is depressed to the time it is released is 15 mm (19/32 in.).

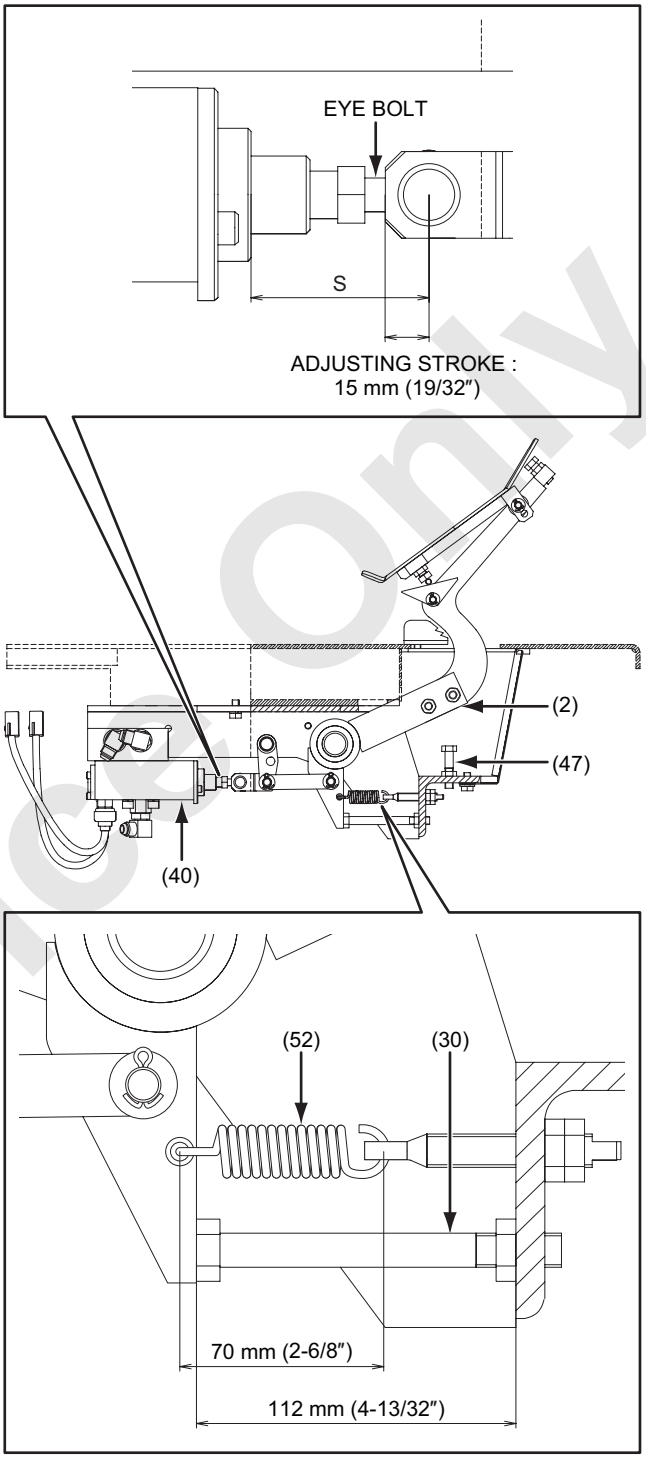

Reference Only

6.4.3 BLEEDING AIR FROM BRAKE CIRCUIT

If air remains in the piping from the brake valve to the cylinder built in the winch, the brake response becomes poor.
If the brake valve and piping are removed, bleed air by the following sequences shown below.

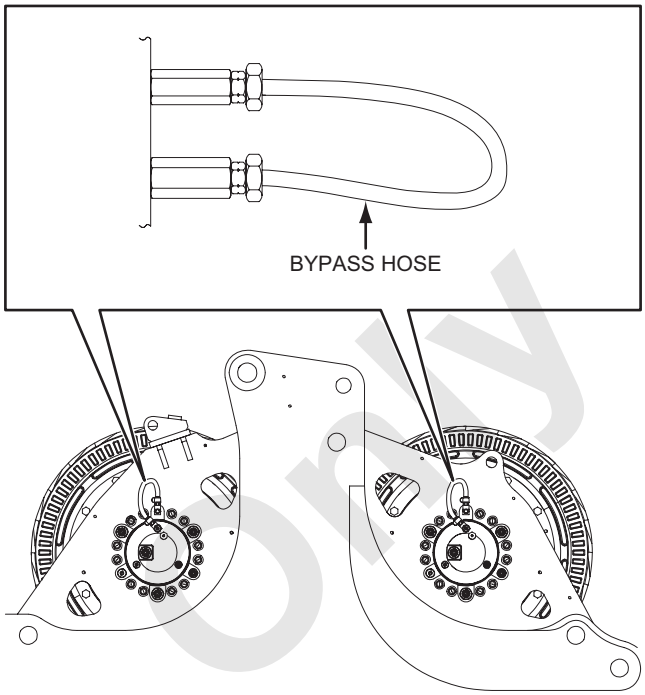

WARNING

When bleed the air from the brake circuit, be sure to lower the hook onto the ground, and select the "free fall" mode.
Then, ensure that the drum does not rotate even when you release your foot from the brake pedal.
Failure to observe this precaution may result in a serious injury or loss of life.

1. Bypass the quick coupler of the winch brake section with a hose, while the engine is stopped.

2. Start the engine, and set the engine speed to the high idling.

3. Fully depress the brake pedal, and press the brake select switch to enter the "Free fall mode".
   * The free fall indicator lamp lights up.

4. Release your foot from the brake pedal, and wait for approx. 1 minute.
   At this time, air bleed.

5. Return to the "Neutral brake mode", and stop the engine.
   After the engine is stopped, wait until the control pressure is released (approx. 1 minute), and then, remove the bypass hose.

Reference Only

Reference Only

7. BOOM HOIST SYSTEM

7.1 APPARATUS AND COMPONENTS LOCATION 7-2
7.2 CONSTRUCTION AND FUNCTION 7-4
7.2.1 HYDRAULIC SCHEMATIC 7-4
7.2.2 RAISING BOOM 7-5
7.2.3 NEUTRAL (HOLDING BOOM) 7-6
7.2.4 LOWERING BOOM 7-7
7.3 BOOM HOIST WINCH 7-9
7.3.1 BOOM HOIST WINCH INSTALLATION 7-9
7.3.2 REDUCTION UNIT ASSEMBLY 7-10
7.3.3 BOOM DRUM LOCK ASSEMBLY 7-12
7.3.4 ADJUSTMENT OF BOOM DRUM LOCK 7-13

Reference Only

Reference Only

7. BOOM HOIST SYSTEM

The boom hoist system consists of the main pump (No.1), the main control valve, the boom drum motor, the reduction unit, the boom drum and the drum lock mechanism.
The pressurized oil for the boom hoist system is supplied by the main pump (No.1) installed on the engine's power divider.
From this pump, the oil flows through the 4 section side control valve to drive the motor of the boom drum.

Reference Only

7.1 APPARATUS AND COMPONENTS LOCATION

Note

Refer to the article "7.2 CONSTRUCTION AND FUNCTION" for circuit diagram and function.

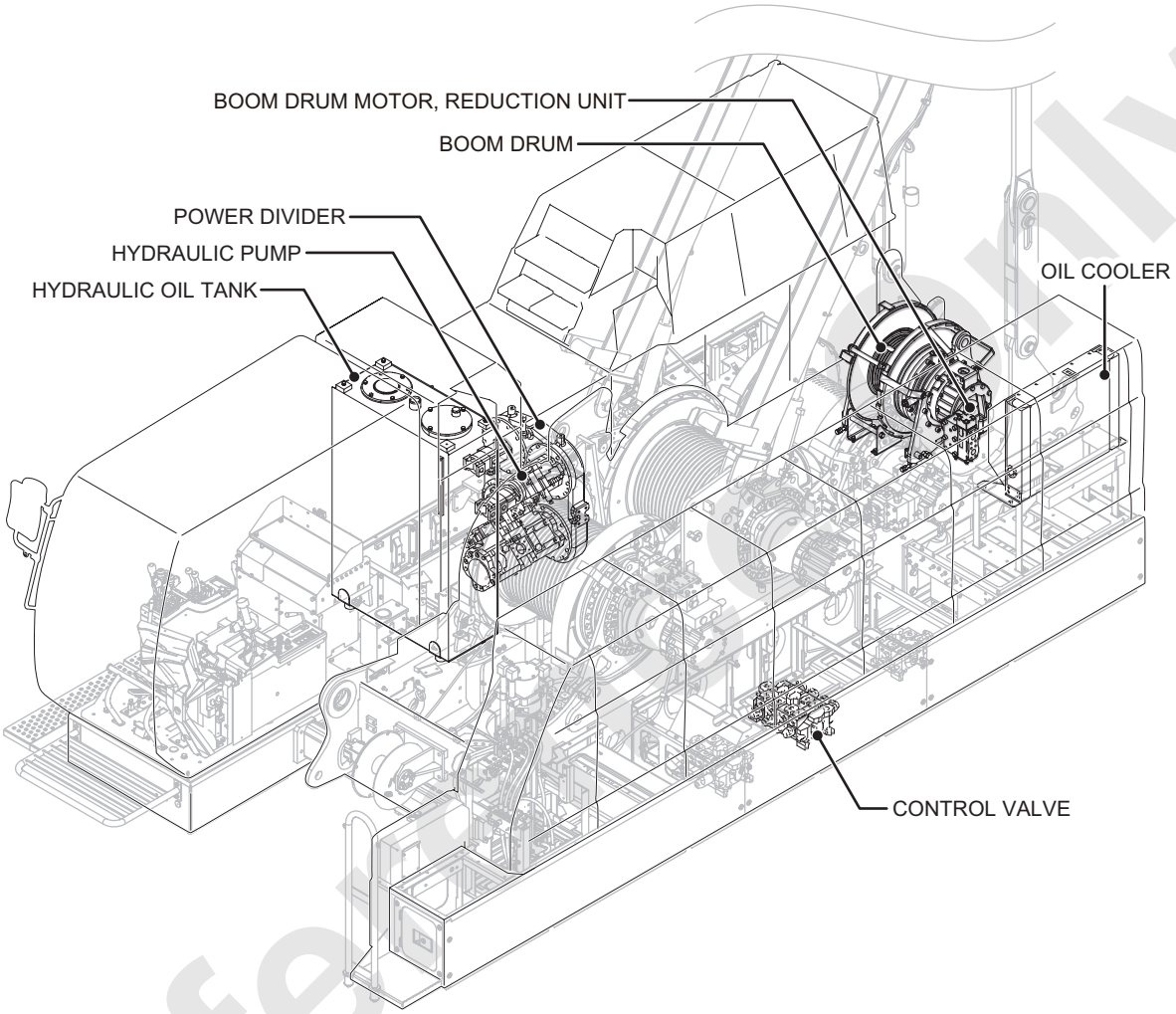

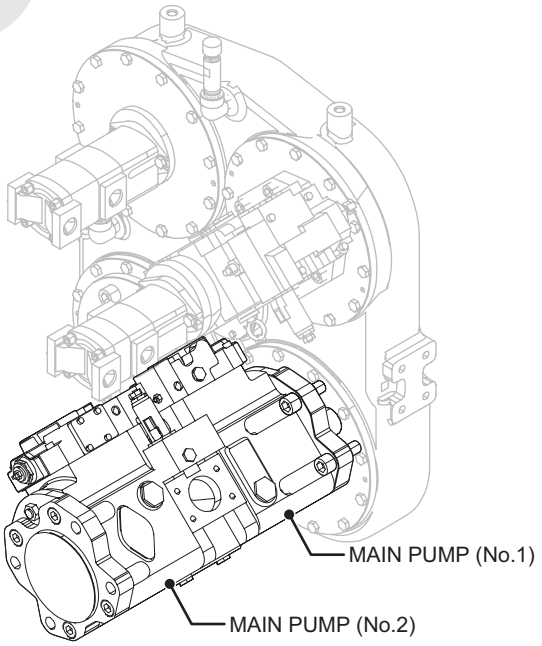

Reference Only

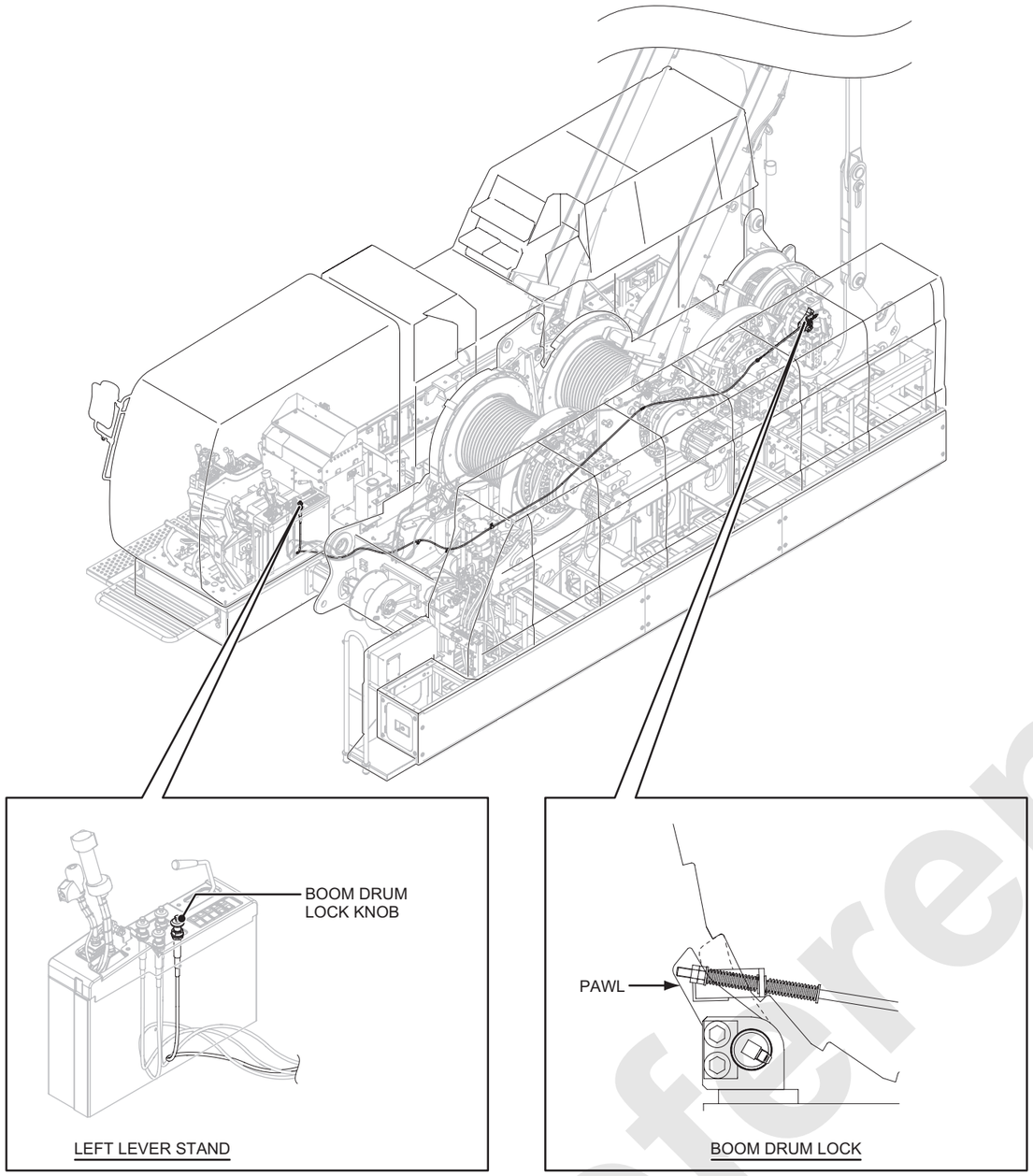

Reference Only

7.2 CONSTRUCTION AND FUNCTION

7.2.1 HYDRAULIC SCHEMATIC

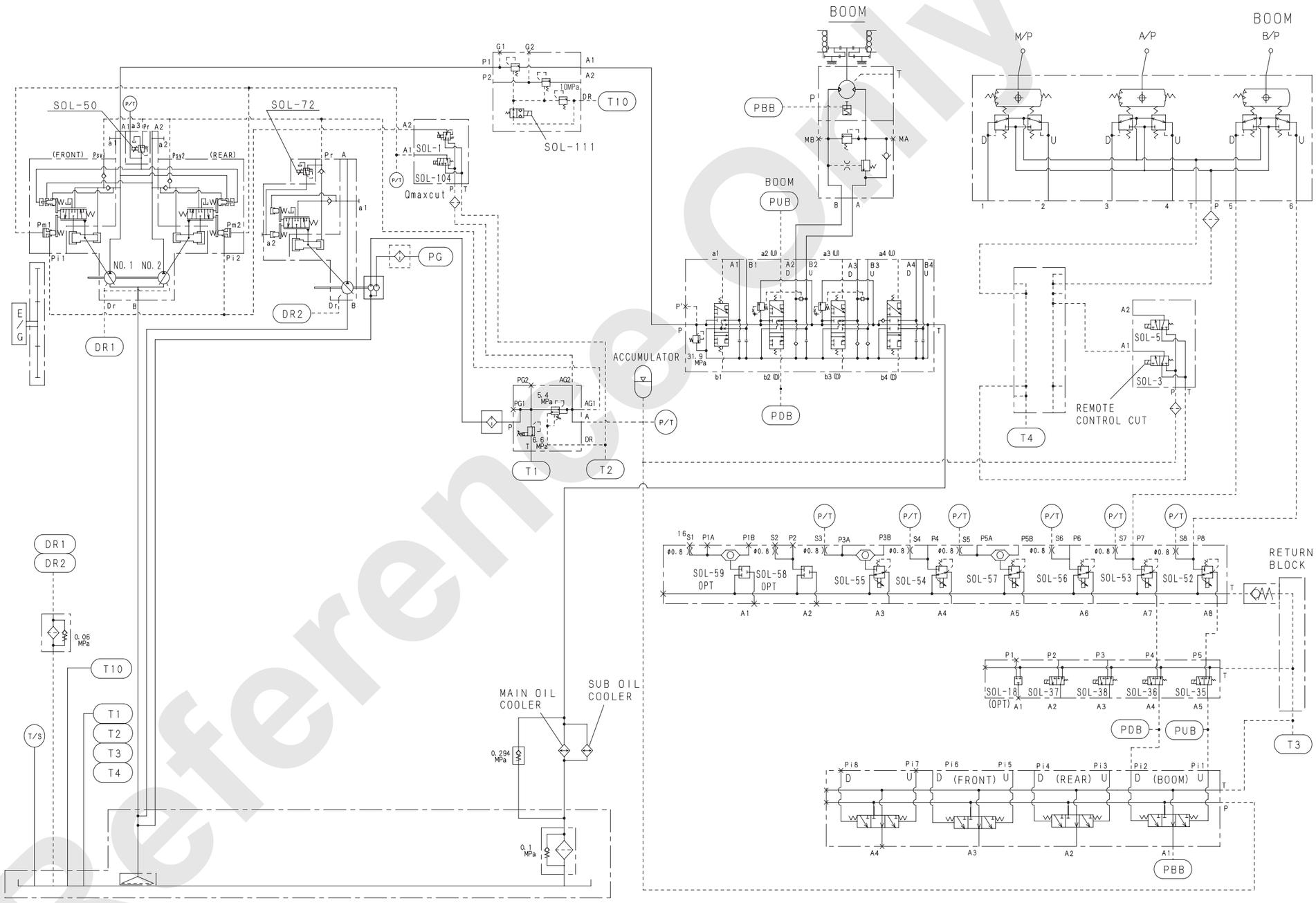

Reference Only

7.2.2 RAISING BOOM

Pressurized hydraulic oil from the No.1 pump flows into 4 section side of the main control valve.
The pressurized oil from the pump for control flows into the valve block and remote control valve through the accumulator.
(Function lock lever is in “WORK” position : 2 section valve block SOL-3 is “CHANGING” position)
At this time, turning the control lever to raising side, make the control pressured oil pass through the remote control valve, 8 section valve, 5 section valve and 4 section valve and enter into the [PUB] port of the control valve to move the boom section spool.
At the same time, control pressured oil also enters into the negative brake cylinder through the valve block (4 section hyd. selecting valve) and the motor brake is released.

Main pressured oil flows into the control valve enters into the raising side of the boom drum motor by the boom section spool and the boom is raised.

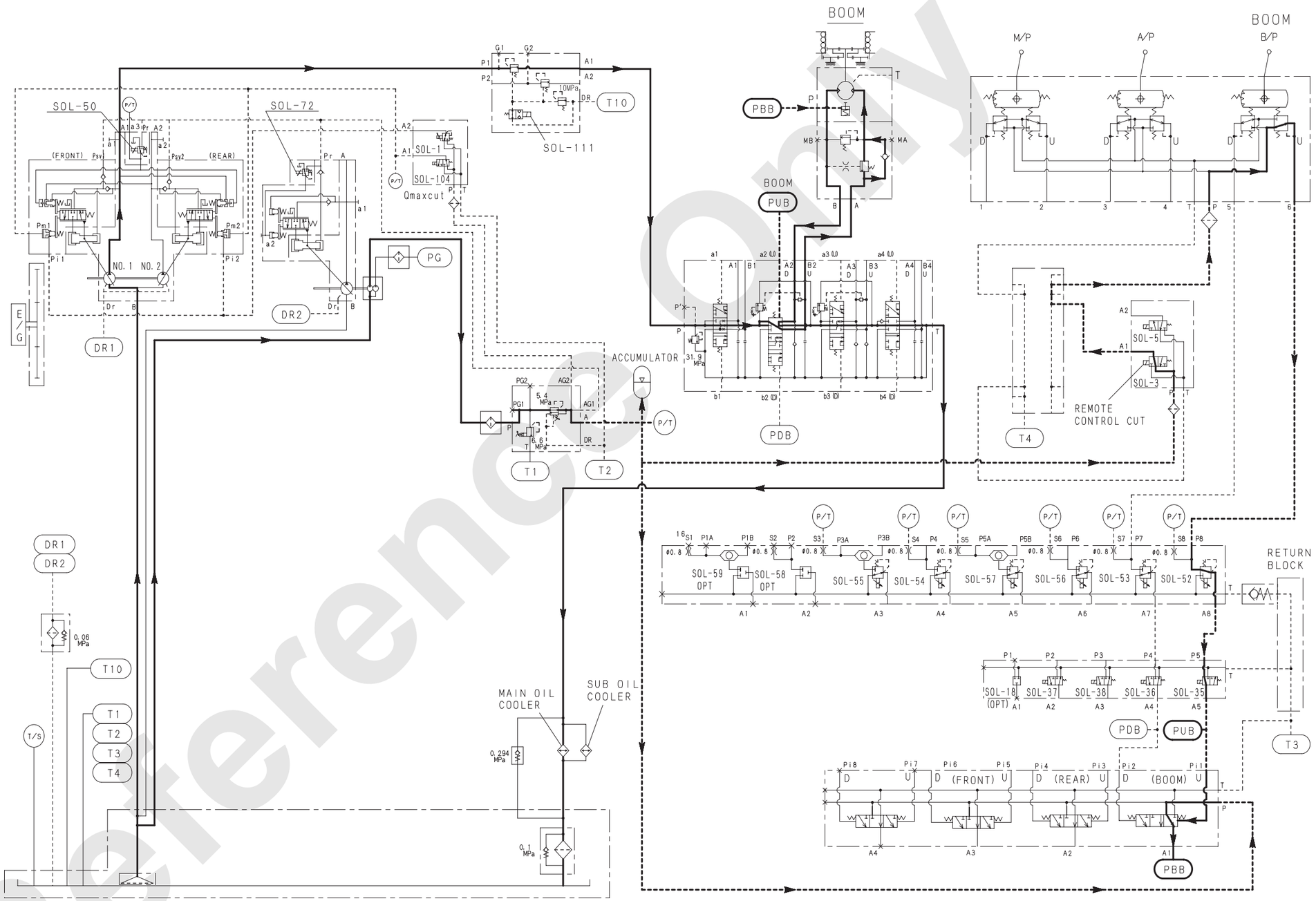

Reference Only

7.2.3 NEUTRAL (HOLDING BOOM)

When the control lever is returned to neutral, control pressure from the remote control valve is shut off and main control valve spool returns to neutral and pressured oil from the No.1 pump passes through the control valve and returns to the tank without load.

The stopped motor tends to rotate toward lowering side by boom weight.

But the return oil flow is shut off by the counterbalance valve and motor does not rotate.

At the same time, pressured oil flows into the boom drum motor brake cylinder returns to the tank through the valve block (4 section hyd. selecting valve) and the motor brake becomes actuated.

(Negative brake)

Therefore the boom is held by the counterbalance valve and motor brake.

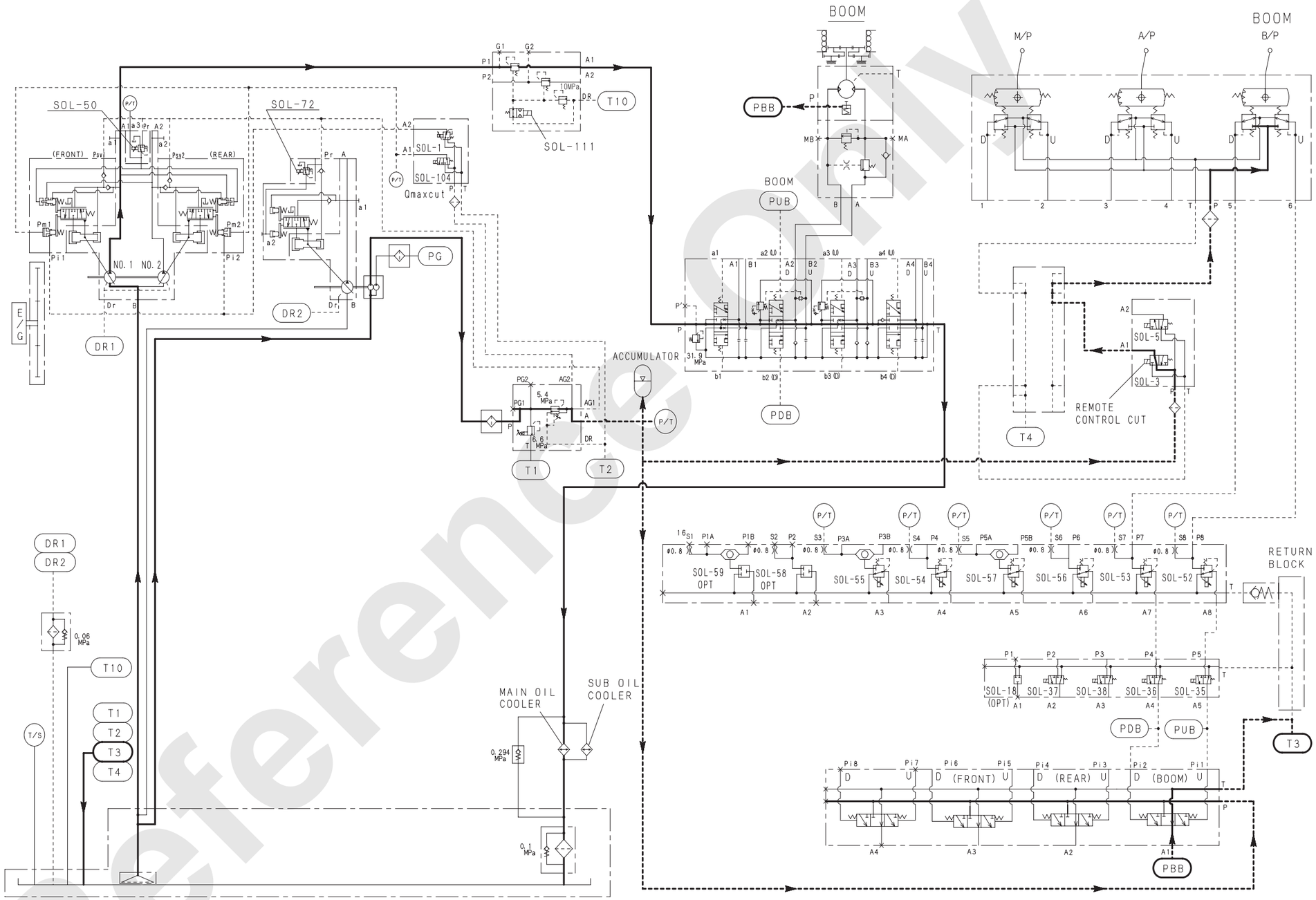

Reference Only

7.2.4 LOWERING BOOM

The pressured oil from the No.1 pump flows into the 4 section side main control valve.
The pressurized oil from the pump for control flows into the valve block and remote control valve through the accumulator.
(Function lock lever is in “WORK” position : 2 section valve block SOL-3 is “CHANGING” position)
At this time, turning the control lever to lowering side, to make the pressurized oil for control pass through the remote control valve, 8 section valve, 5 section valve and 4 section valve and enter into the [PDB] port of the control valve to move the boom section spool.
At the same time, pressurized oil for control also enters into the built in motor brake in the boom drum motor and the motor brake is released.

Main pressured oil flows into the control valve enters into the lowering side of the boom drum motor by the control valve and open the return counterbalance valve and the boom is lowered.

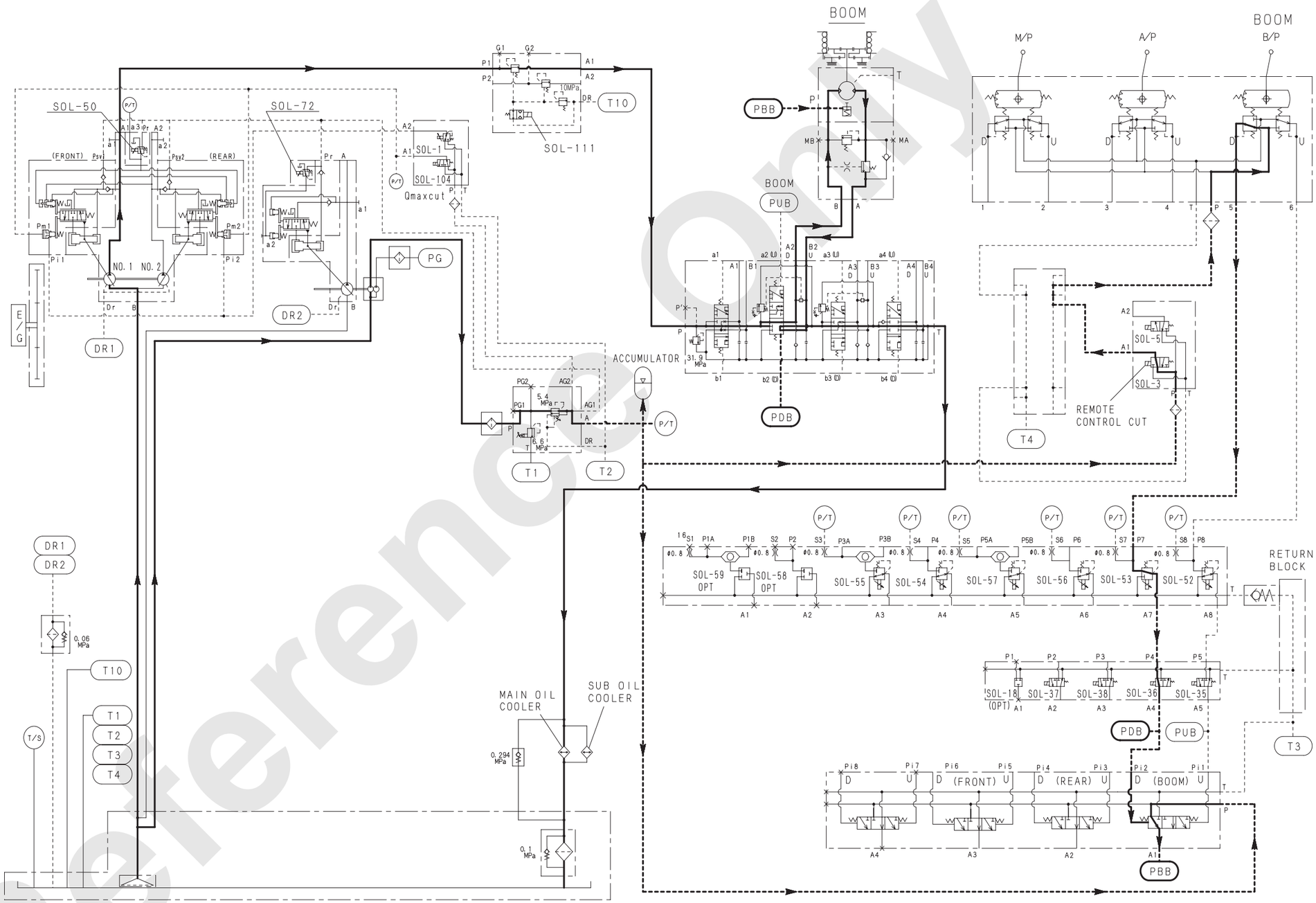

Reference Only

This page is blank for editing convenience.

Reference Only

7.3 BOOM HOIST WINCH

7.3.1 BOOM HOIST WINCH INSTALLATION

When boom hoist winch is to be installed or removed, perform work observing the following tightening torque and note.

Note

After assembly, fill oil to the specified level. (Approx. 5 L [1.3 gal])
Higher than level gauge red point and within the oil.
Extreme pressure gear oil SAE#90 (API-GL4) or SAE#80W-90.

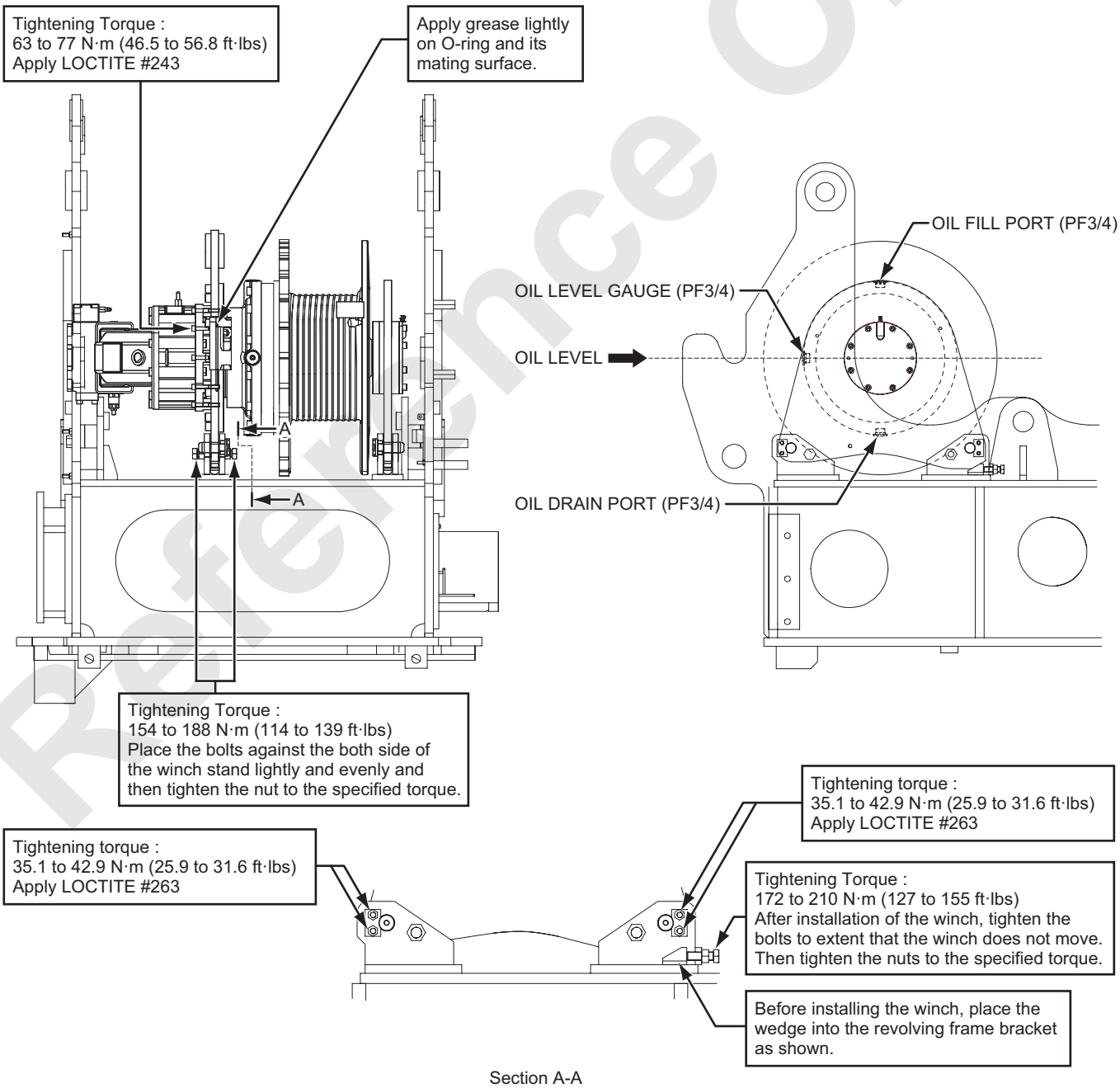

Section A-A

Reference Only

7.3.2 REDUCTION UNIT ASSEMBLY

* Apply LOCTITE #515 on the mating surface as shown

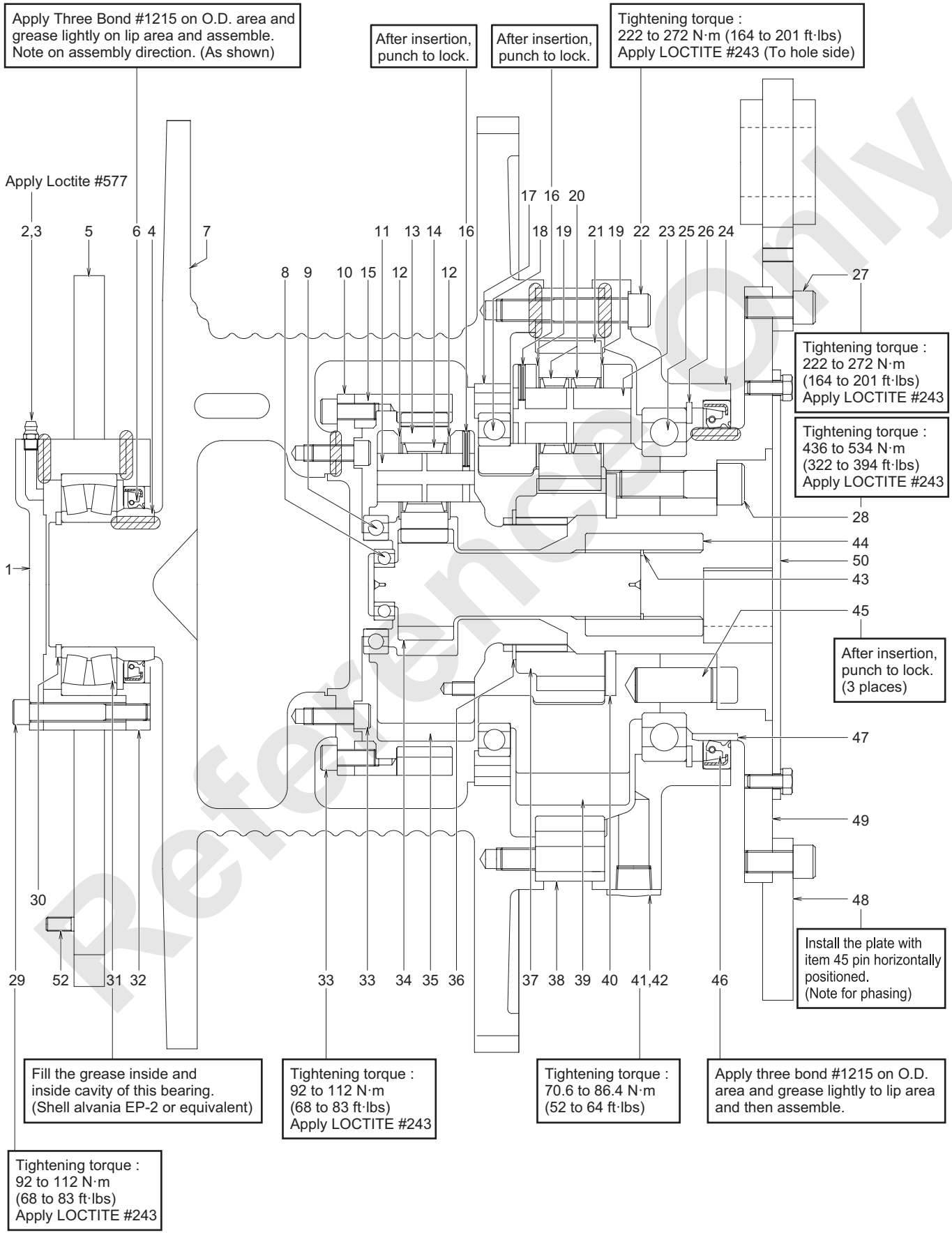

Reference Only

1. Cover
2. Grease fitting
3. Cap
4. Sleeve
5. Plate
6. Oil seal
7. Drum
8. Bearing
9. Bearing
10. Cover
11. Pin
12. Thrust washer
13. Pinion
14. Needle bearing
15. Ring gear
16. Spring pin
17. Spacer
18. Bearing
19. Thrust washer
20. Needle bearing
21. Pinion
22. Hex. set screw
23. Pin
24. Sleeve bearing
25. Bearing
26. Snap ring
27. Hex. set screw
28. Hex. set screw
29. Hex. set screw
30. Snap ring
31. Bearing
32. Plate
33. Hex. set screw
34. Sun gear
35. Carrier
36. Snap ring
37. Sun gear
38. Ring gear
39. Carrier
40. Spacer
41. Plug
42. O-ring
43. Snap ring
44. Collar
45. Pin
46. Oil seal
47. Sleeve
48. Plate
49. Retainer
50. Plate
51. Plate
52. Stud bolt

TIGHTENING TORQUE TABLE

Name	Size	Tightening Torque : N·m (ft·lbs)
22. Hex. set screw	M16 × 90	222 to 272 (164 to 201)
27. Hex. set screw	M16 × 35	222 to 272 (164 to 201)
28. Hex. set screw	M20 × 70	436 to 534 (322 to 394)
29. Hex. set screw	M12 × 85	92 to 112 (68 to 83)
33. Hex. set screw	M12 × 25	92 to 112 (68 to 83)
41. Plug		70.6 to 86.4 (52 to 64)

Reference Only

7.3.3 BOOM DRUM LOCK ASSEMBLY

When the assembly is complete, fill grease until it is squeezed out from the clearances of the pawl.

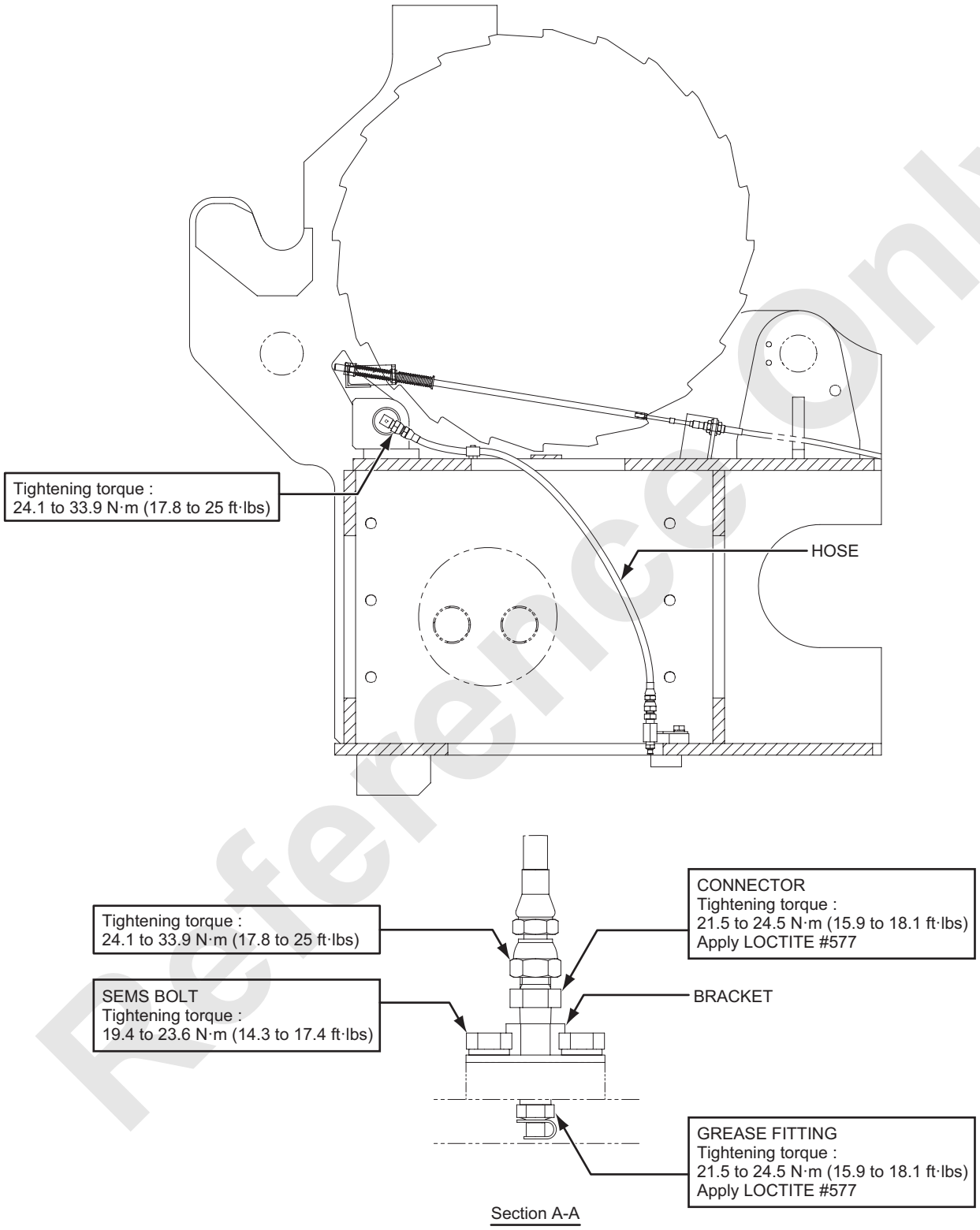

Reference Only

7.3.4 ADJUSTMENT OF BOOM DRUM LOCK

WARNING

Do not adjust the drum locks until the boom and hook block have been lowered to the ground.
Failure to observe this precaution may result in a serious injury or loss of life.

1. Pull the drum lock knob in the lock position and check to see that the pawl is engaged in the bottom of the drum ratchet.
   If the pawl is not engaged in the bottom of the ratchet, adjust the spring length to allow the pawl to be engaged.

2. With the release position of drum lock, adjust the respective dimension as shown in the figure to the below.

BOOM DRUM LOCK

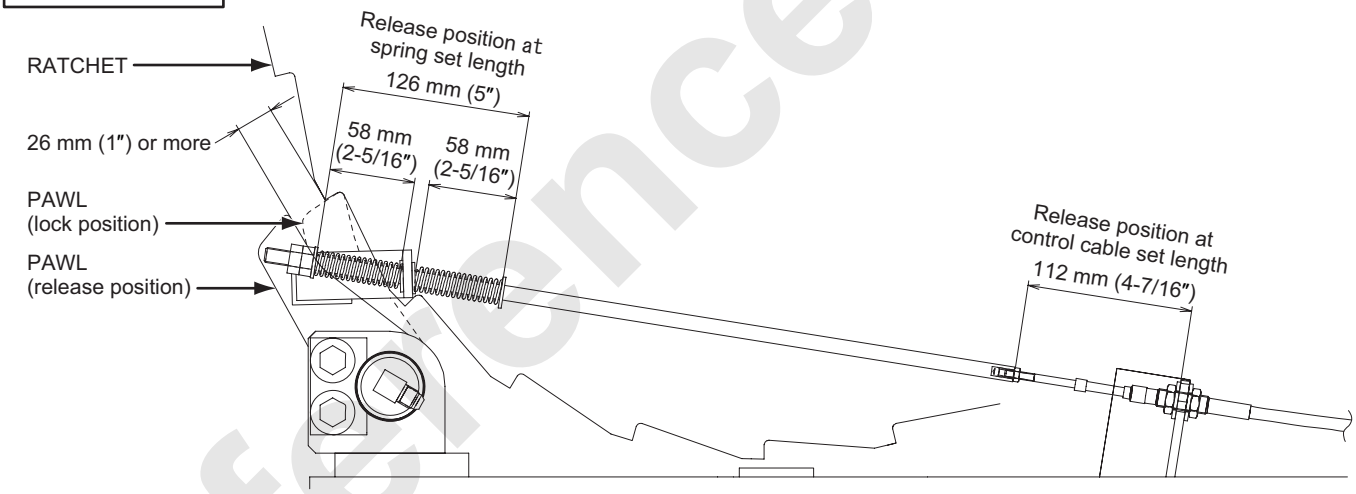

3. Push the drum lock knob in the release position and check to see that the pawl is clear of the ratchet by at least 26 mm (1 in.).

4. Operate the knob to the lock position, and to the release position and confirm that the pawl moves smoothly.

WARNING

Place a signal person to prevent accident from rotating drum.
Failure to observe this precaution may result in a serious injury.

Reference Only

Reference Only

8. SWING SYSTEM

8.1 APPARATUS AND COMPONENTS LOCATION 8-1
8.2 CONSTRUCTION AND FUNCTION 8-3
8.2.1 HYDRAULIC SCHEMATIC 8-3
8.2.2 SWING (NEUTRAL FREE) 8-5
8.2.3 STOPPING (NEUTRAL FREE) 8-6
8.2.4 SWING (NEUTRAL FREE/BRAKE MODE SELECT) 8-7
8.2.5 STOPPING (NEUTRAL FREE/BRAKE MODE SELECT) 8-9
8.3 CONSTRUCTION OF THE SWING SYSTEM 8-11
8.3.1 SWING REDUCTION UNIT 8-11
8.3.2 REDUCTION UNIT ASSEMBLY 8-12
8.3.3 SWING BEARING 8-13
8.3.4 SWING LOCK 8-14

Reference Only

Reference Only

8. SWING SYSTEM

8.1 APPARATUS AND COMPONENTS LOCATION

The swing system consists of the swing pump (No.3), the swing motor (built in swing brake), the swing control valve, the reduction unit, the swing bearing ring, the swivel joint, the swing gear and the swing lock.

To swing the upper machinery, pressurized oil from the swing pump (No.3) mounted on the power divider is sent to the swing motor by way of the control valve which is directly mounted on the swing motor.

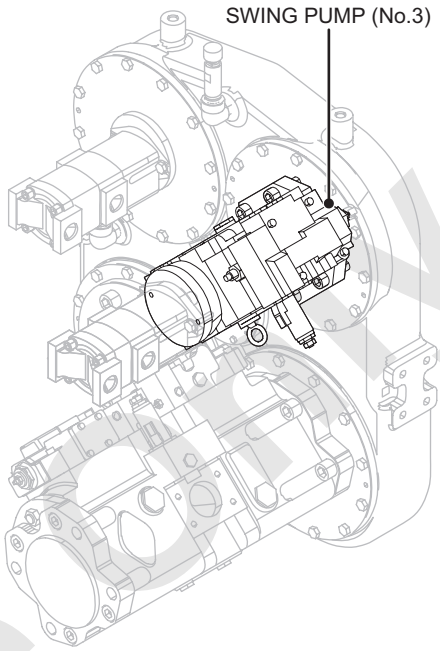

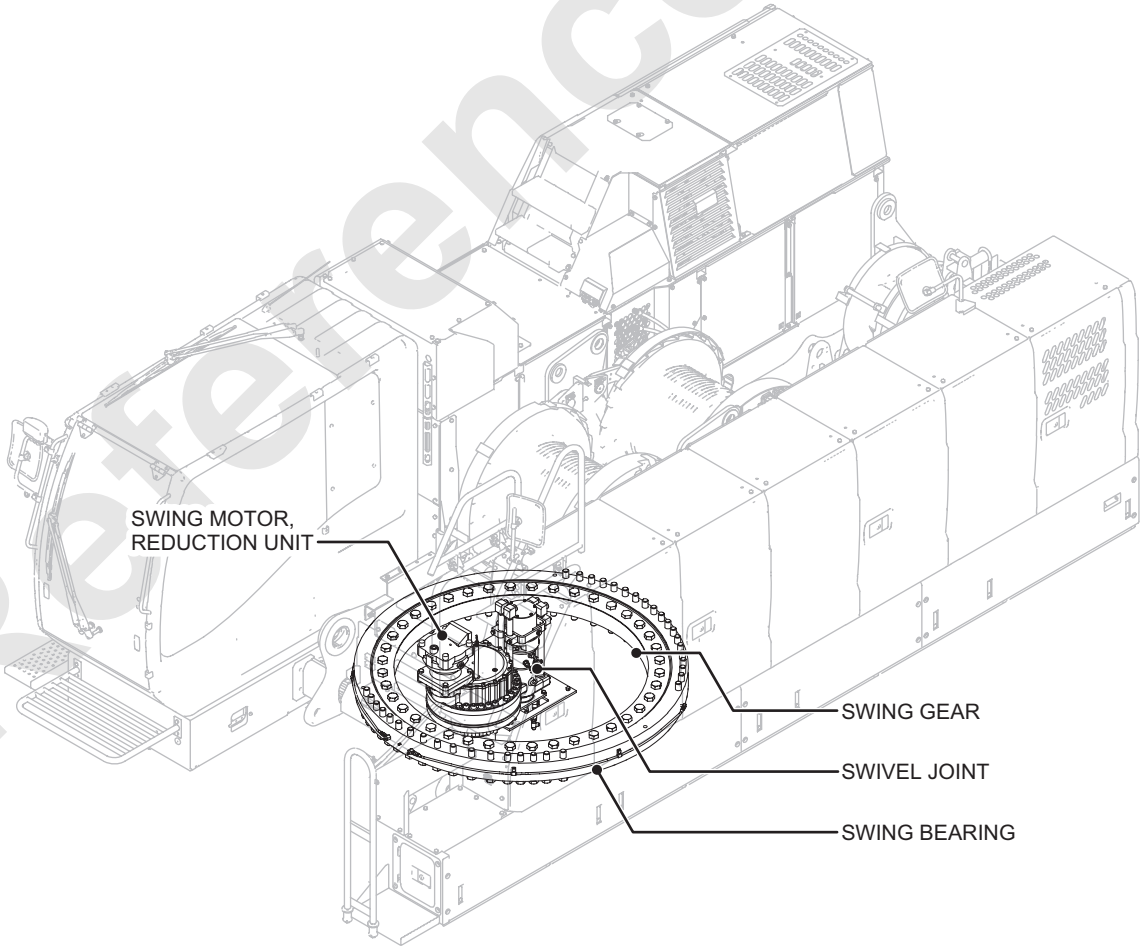

Reference only

This page is blank for editing convenience.

Reference Only

8.2 CONSTRUCTION AND FUNCTION

8.2.1 HYDRAULIC SCHEMATIC

1. Swing neutral free circuit

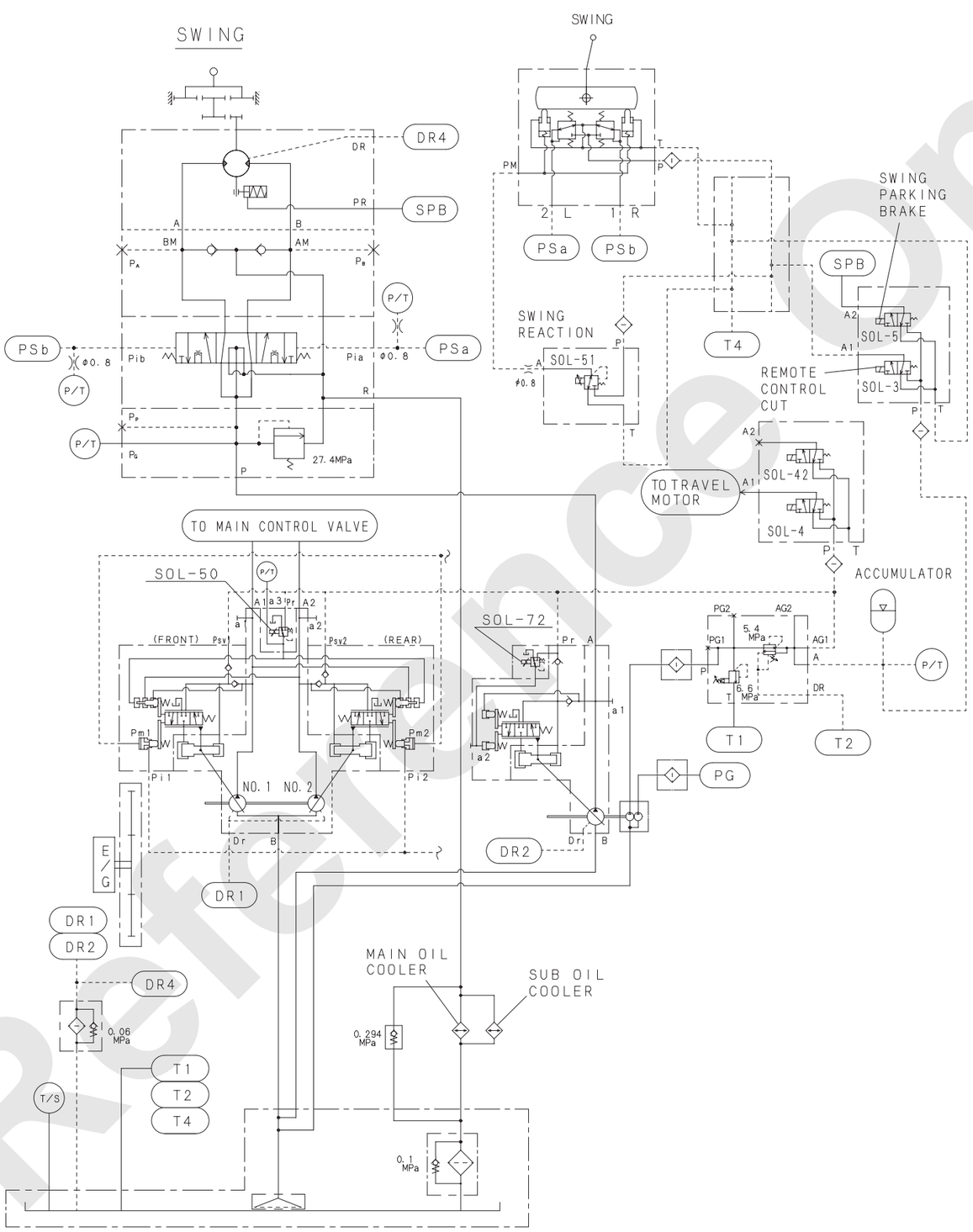

Reference Only

2. Swing neutral free/brake, swing angle limit (Option)

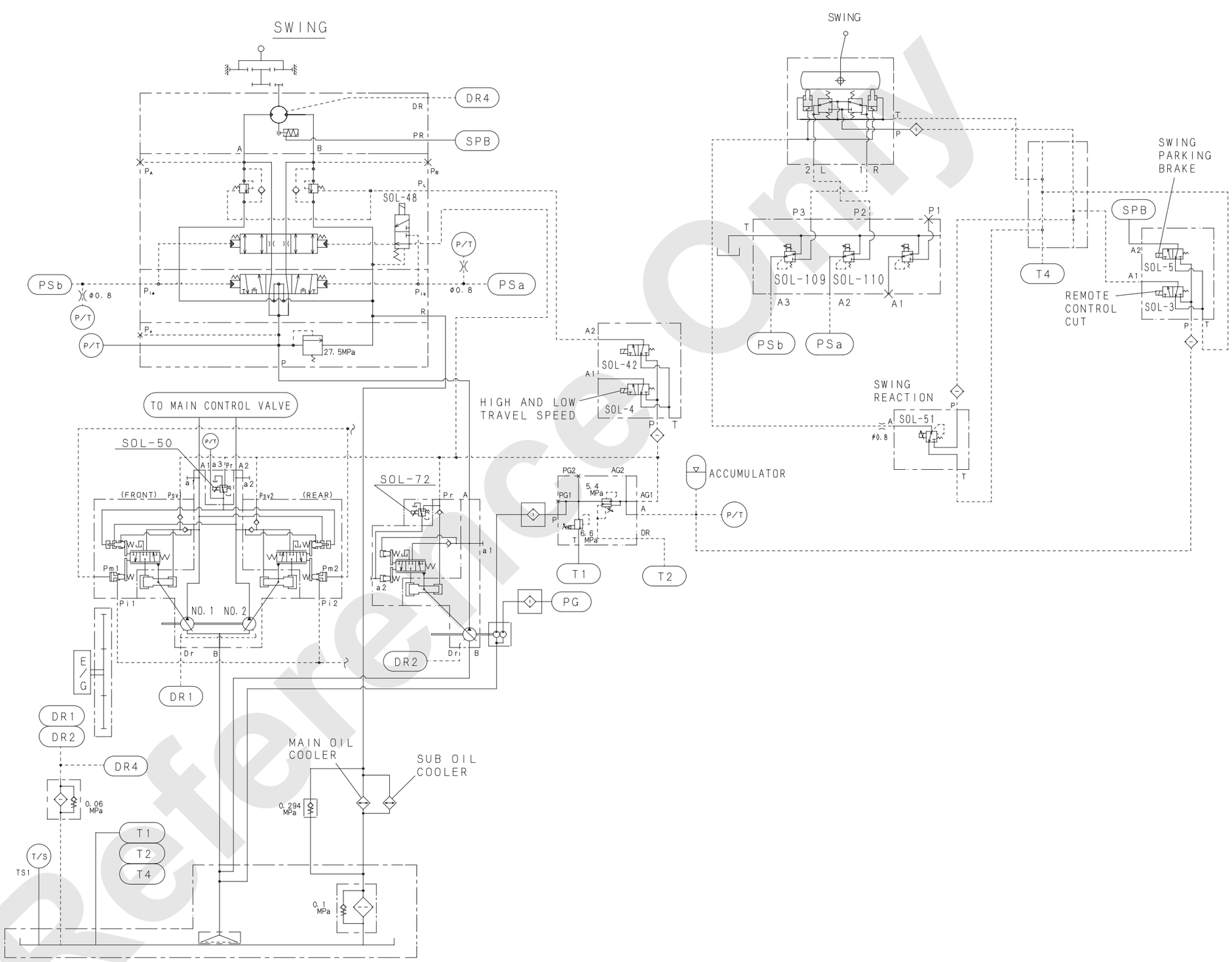

Reference Only

8.2.2 SWING (NEUTRAL FREE)

The working principle of right swing, and left swing are identical.
The right swing is explained here.

[The swing brake is released (“SPB” SOL-5 is actuated).]

The pressurized oil from the swing pump (No.3) is led to the swing control valve.
On the other hand, the control pressurized oil from the control pump flows through the accumulator, and into the valve block, swing remote control valve.
[The function lock lever is in the “WORK” position (SOL-3 is actuated).]

When the swing control lever is turned to right swing (toward to the operator), control oil pass through the remote control valve and flows into the (PSb) port of the control valve and move the spool (A).
The main pressurized oil control by the control valve is fed the swing motor to run the swing motor.

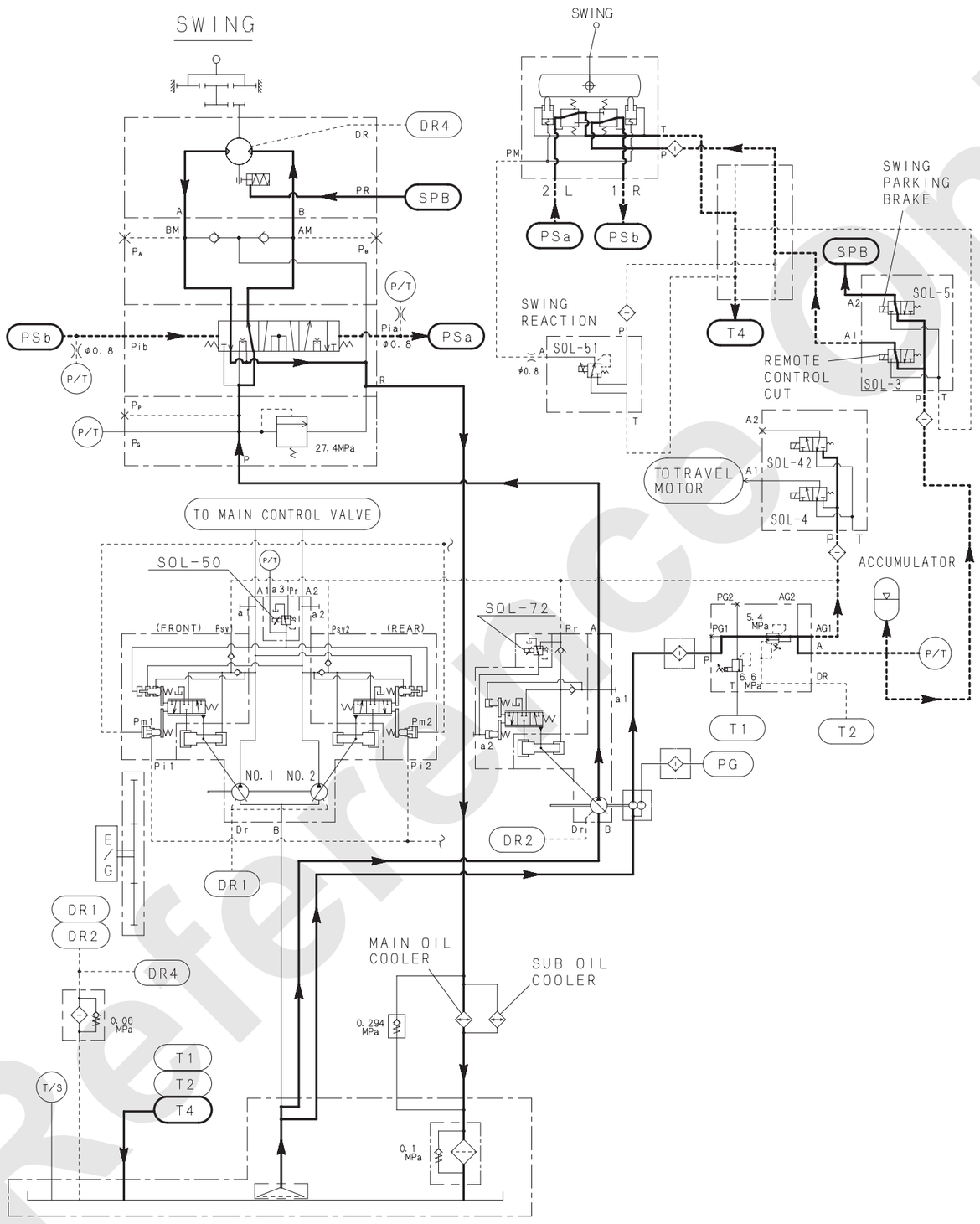

Reference only

8.2.3 STOPPING (NEUTRAL FREE)

When the swing control lever is returned from the swing position to the neutral position, the control pressure from the remote control valve is shut off, and the control valve spool (A) returns to neutral.
As a result, the main pressurized oil from the swing pump (No.3) returns to the tank with no load.

Although oil supply to the swing motor is cut off, but the return oil circulates within the motor and valve.
Therefore motor continues to rotate with its inertia.
(When the swing brake released position selected.)
To stop the swing motion, turn the swing control lever gently to the opposite direction to generate the brake pressure at the swing motor outlet port by the pump pressure.

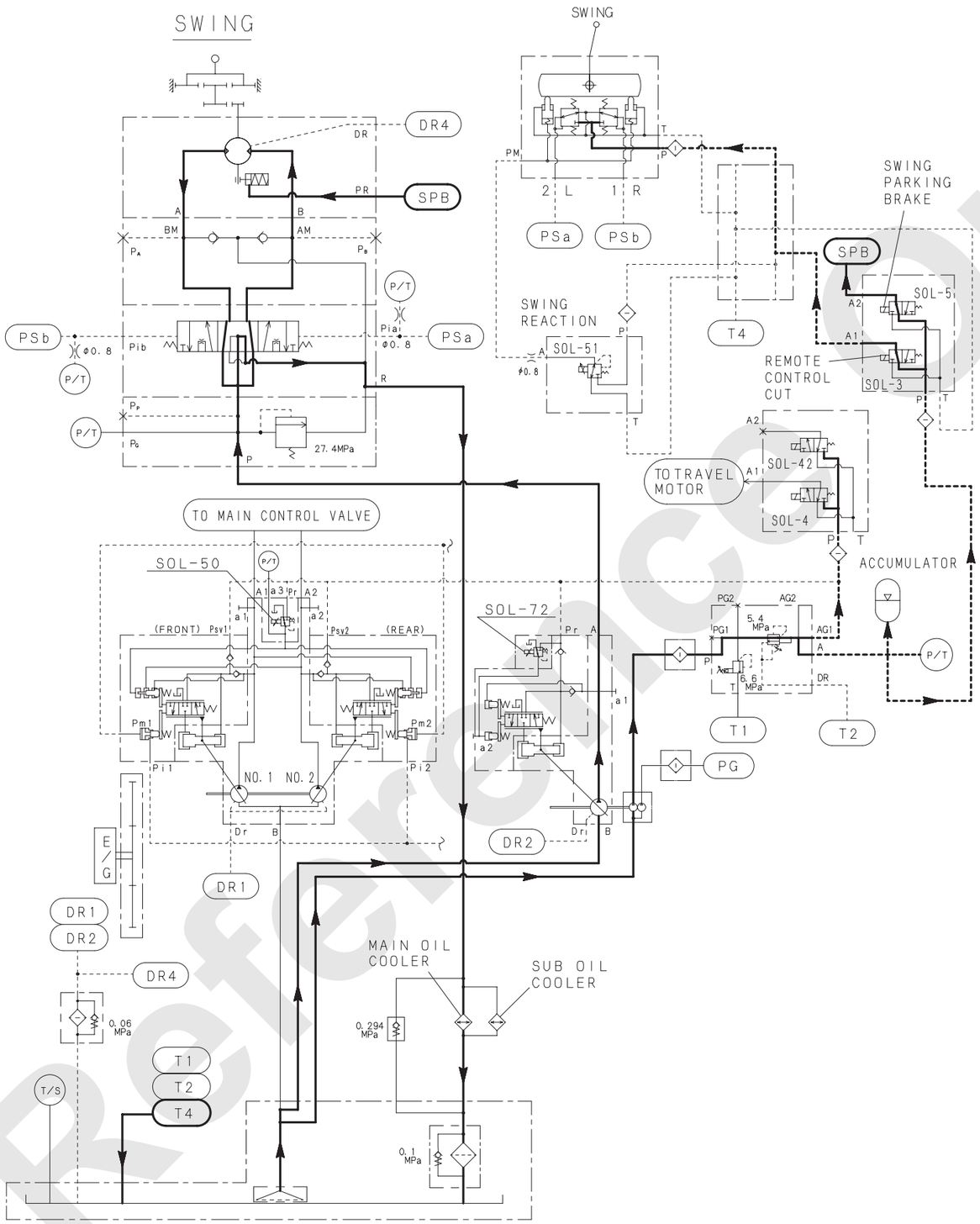

Reference Only

8.2.4 SWING (NEUTRAL FREE/BRAKE MODE SELECT)

The working principle of the rightward swing, identical to that of the leftward swing, is shown below.[The swing brake is released (“SPB” SOL-5 is actuated).]The pressurized oil from the swing pump is led to the swing control valve. On the other hand, the control pressurized oil from the control pump flows into the valve block, swing remote control valve, and brake mode select solenoid valve (SOL-48) built in the swing control valve through the accumulator. [The function lock lever is at the “Work” position (SOL-3 is actuated).]

1. Neutral free mode

   When the swing mode selector switch on the monitor in the operator’s cab is set to the “free” side, the control pressurized oil flows through the solenoid valve (SOL-48) to move the spool (B) of the swing control valve to the full stroke.
   In this status, when the swing control lever is swung down to the right swing side (back ward), the control oil flows through the remote control valve, and is led to the (PSb) port of the control valve to move the spool (A).
   The main pressurized oil controlled by the control valve is fed to the swing motor to run the motor.

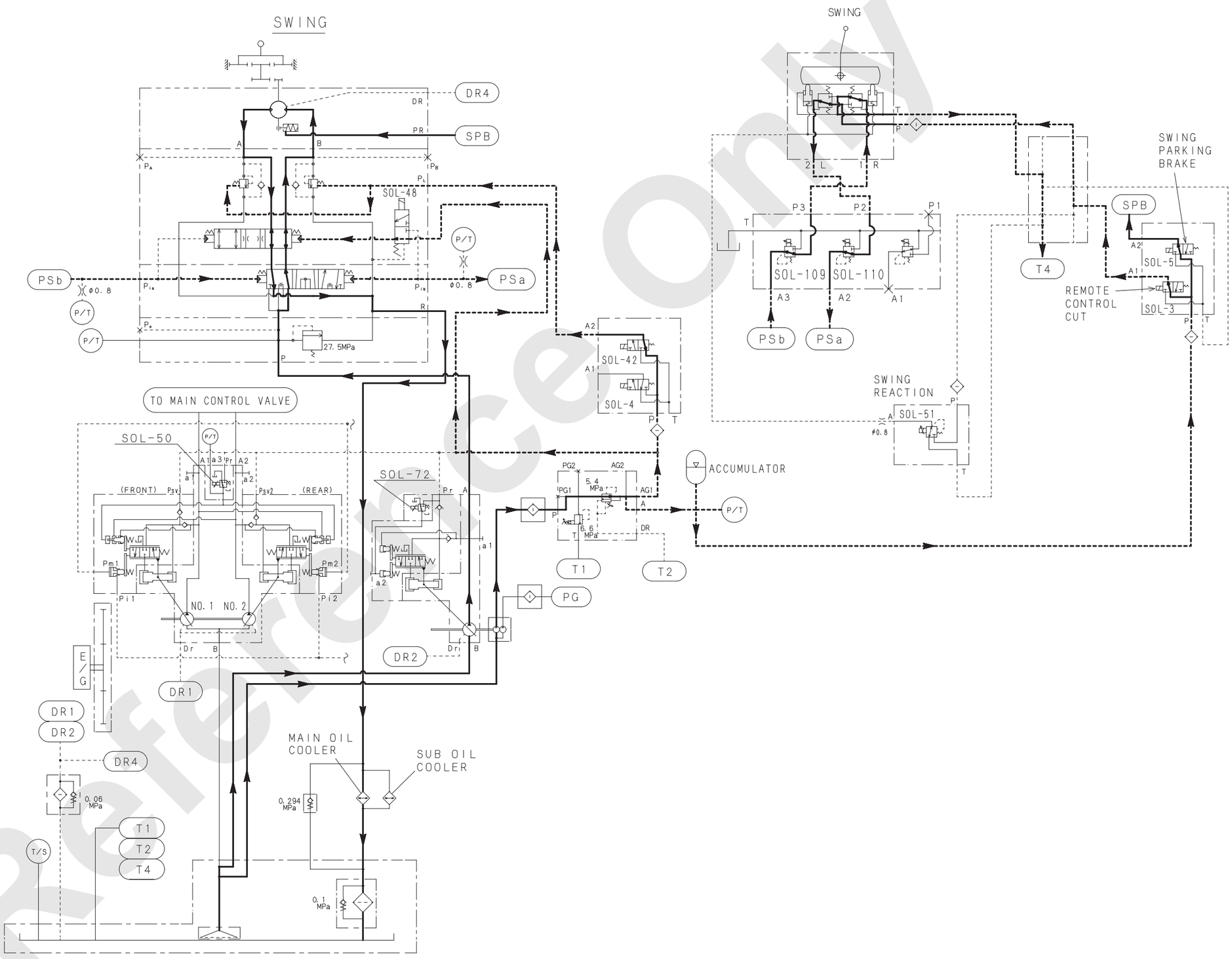

Reference Only

2. Neutral brake mode

When the swing mode selector switch on the monitor in the operator's cab is set to the "brake" side, the solenoid valve (SOL-48) is actuated to connect the both pilot ports, the swing control valve spool (A) and (B).
In this status, when the swing control lever is swung down to the right swing side (back ward), the control oil flows is led to the (PSb) port of the control valve to move the spools (A) and (B) at the same time.
The main pressurized oil controlled by the control valve is fed to the swing motor to run the motor.

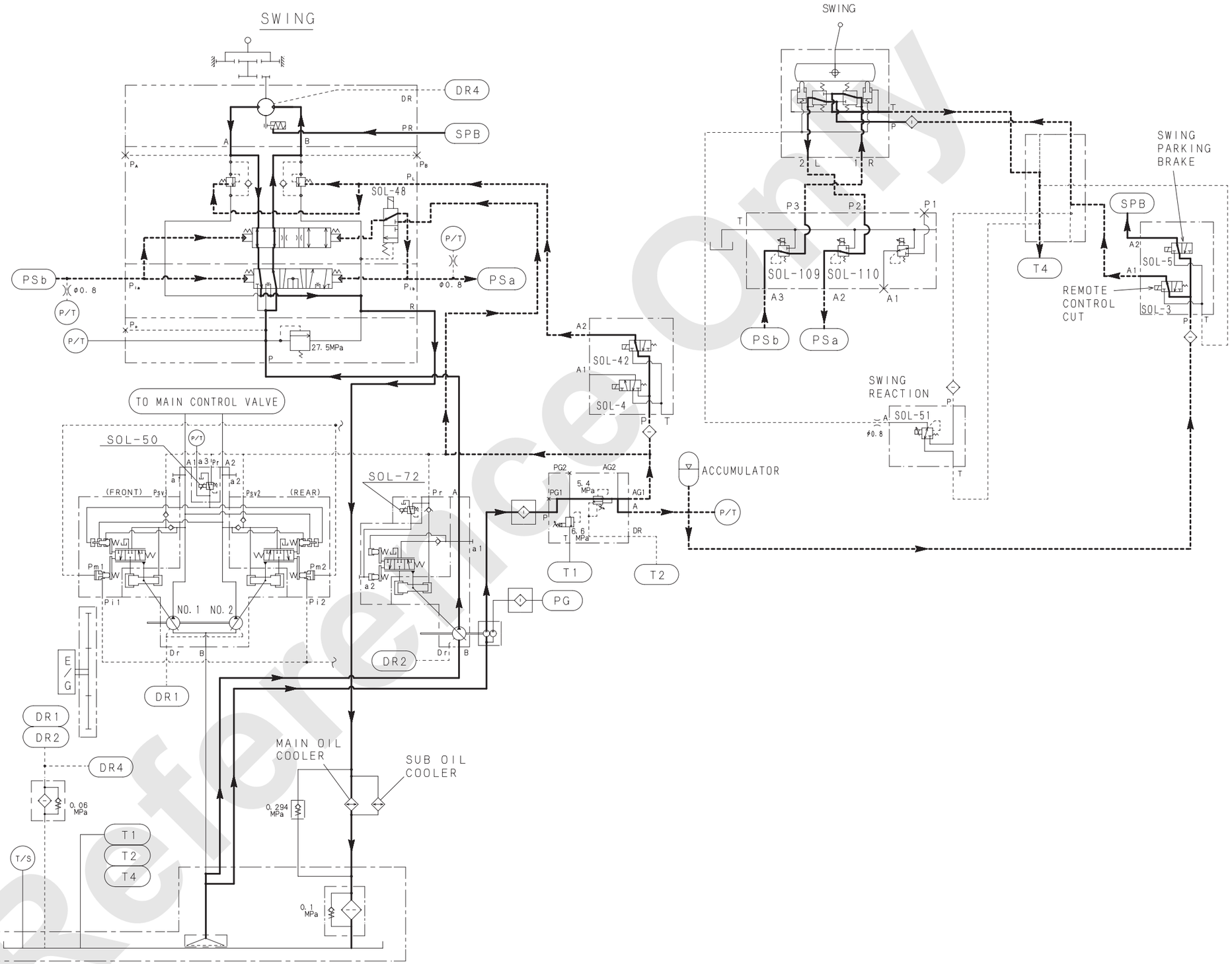

Reference Only

8.2.5 STOPPING (NEUTRAL FREE/BRAKE MODE SELECT)

When the swing control lever is returned from the swing mode to the neutral mode, the control pressure from the remote control valve is lost, and the control valve spool (A) returns to neutral.
Thus, the main pressurized oil returns to the tank with no load.

1. Neutral free mode

   Although the pressurized oil flow to the swing motor is shut down, the returned oil circulates in the motor and valves, since the spool (B) has been moved to the full stroke by the pilot pressure.
   Thus, the motor continues rotating by inertia. (The swing brake is released.)
   To stop the swing motion, carefully swing down the swing control lever to the opposite side.

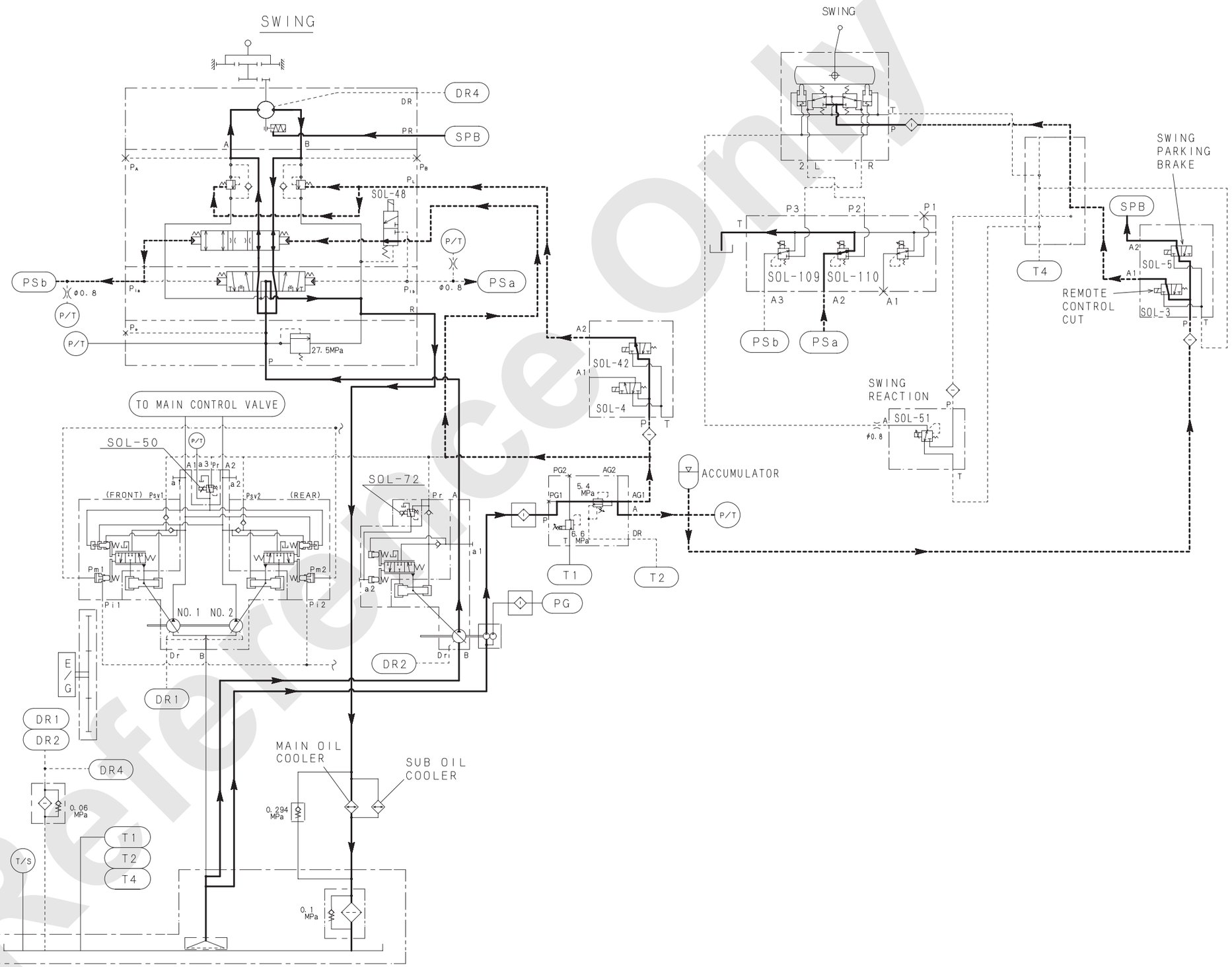

Reference Only

2. Neutral brake mode

The brake mode select solenoid valve (SOL-48) is actuated, and the spool (B) returns to neutral.
The brake pressure is generated at the exit port of the swing motor by the oil returned from the swing motor passing the restrict or section of the control valve spool (B).
The swing motor is decelerated by the brake pressure until the motor is stopped smoothly.
(The swing brake is released.)
The main pressurized oil returned from the swing motor is interrupted by the orifice of the spool (B), then the swing stops.
If an unusually high pressure occurs, the overload valve is actuated to protect the circuit from damage.
(At the neutral brake mode, the overload valve relief set is Low side.)
However, remember that the motor will not be stopped completely when external forces are always applied, including the operation on a slope or on windy days.

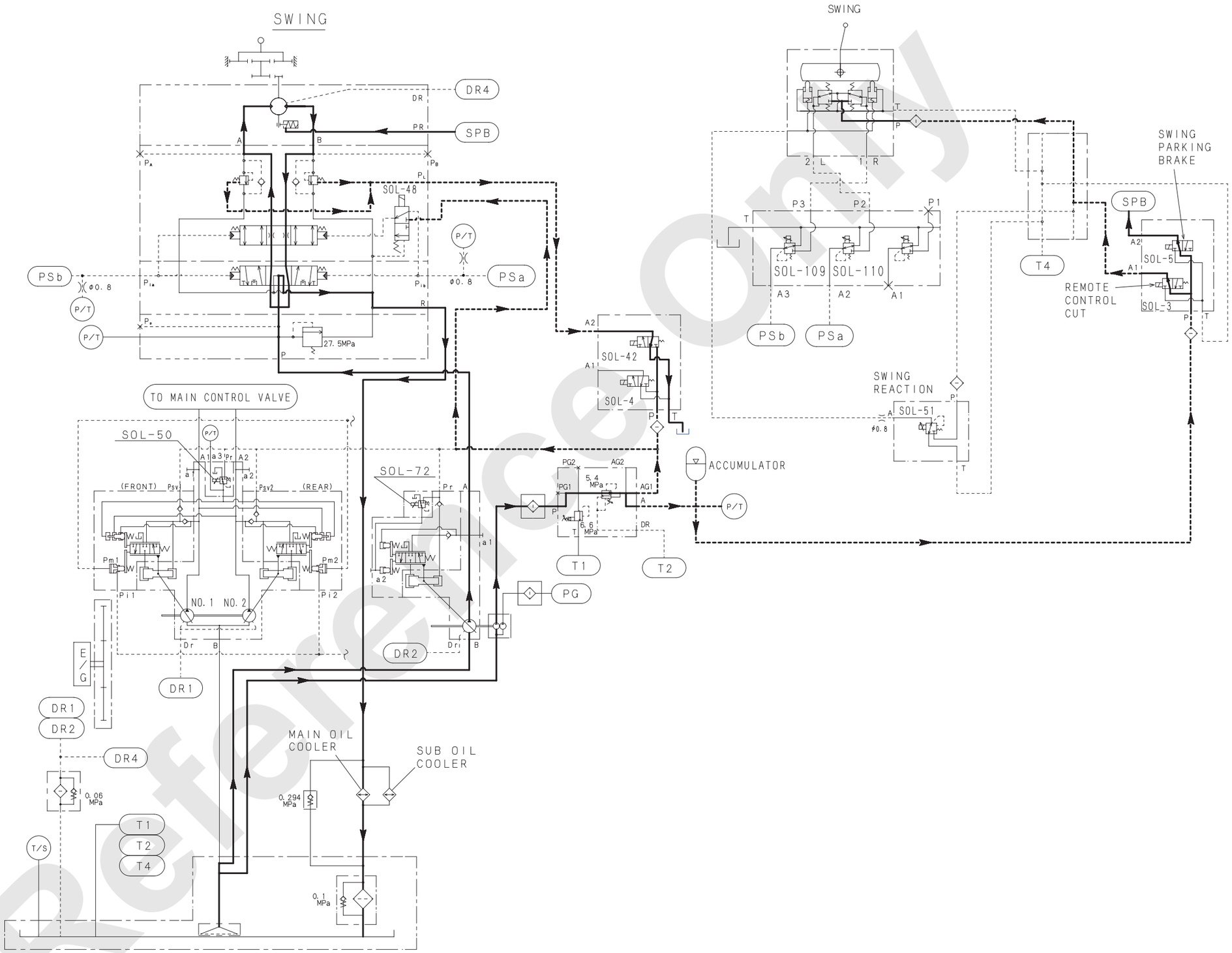

Reference Only

8.3 CONSTRUCTION OF THE SWING SYSTEM

8.3.1 SWING REDUCTION UNIT

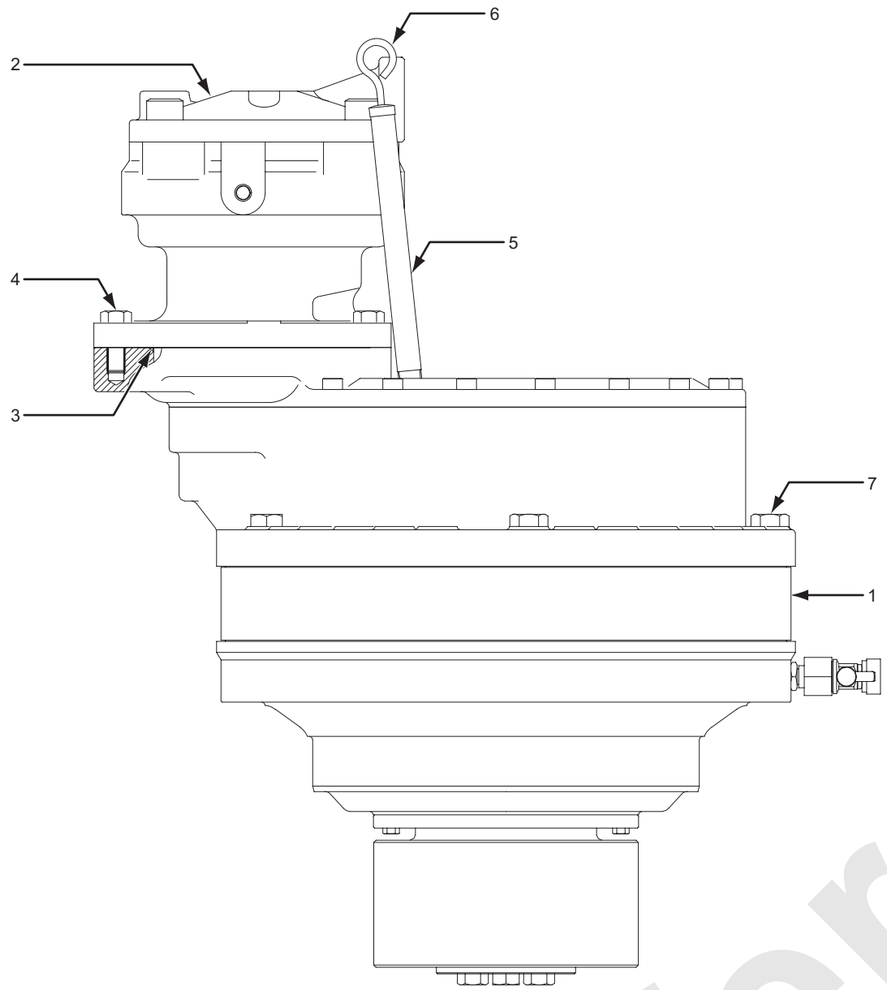

Name	Tightening Torque	Weight
1. Reduction unit	–	395 kg (875 lbs)
2. Motor	–	64 kg (141 lbs)
3. O-Ring	–	–
4. Bolt	M16×45 mm / 145 to 177 N·m (107 to 131 ft·lbs)	–
5. Tube	–	–
6. Level gauge	–	–
7. Bolt	M20×140 mm / 500 to 618 N·m (369 to 456 ft·lbs)	–

Reference Only

8.3.2 REDUCTION UNIT ASSEMBLY

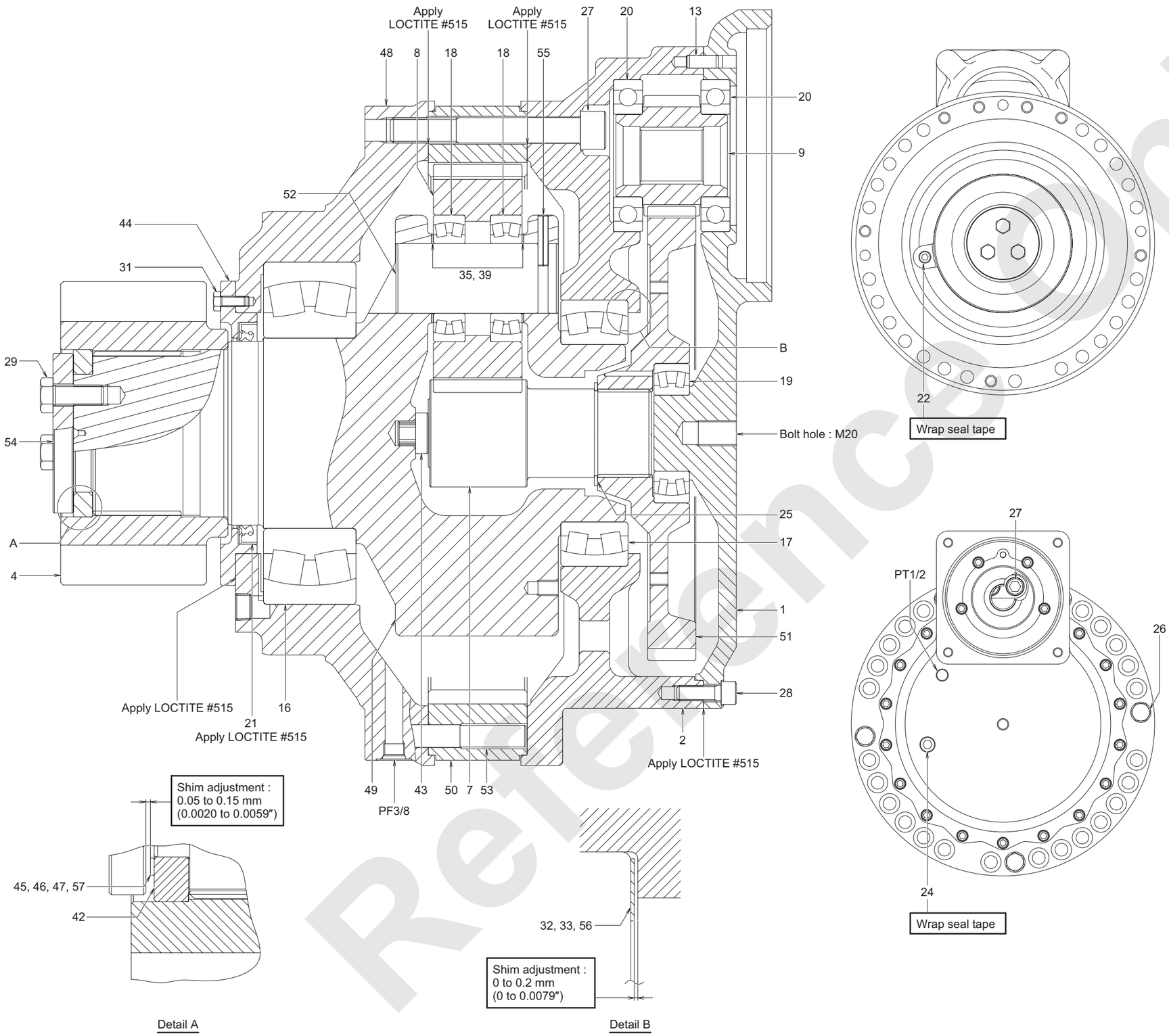

1. Housing
2. Housing
4. Pinion
7. Sun gear
8. Pinion
9. Pinion
13. Pin
16. Bearing
17. Bearing
18. Bearing
19. Bearing
20. Bearing
21. Oil seal
22. Plug
24. Plug
25. Retaining ring
26. Capscrew
27. Capscrew
28. Capscrew
29. Capscrew
31. Capscrew
32. Shim (t=0.2)
33. Shim (t=0.5)
35. Shim (t=1.2)
39. Shim (t=1.6)
42. Spacer
43. Thrust button
44. Retainer
45. Shim (t=0.1)
46. Shim (t=0.2)
47. Shim (t=0.3)
48. Housing
49. Shaft
50. Ring gear
51. Gear
52. Pin
53. Pin
54. Plate
55. Spring pin
56. Shim (t=1.0)
57. Shim (t=0.4)

TIGHTENING TORQUE

Name	Size	Tightening torque : N·m (ft·lbs)
22. Plug	PT 1/2	57.9 to 71.6 (42.7 to 52.8)
24. Plug	PT 3/4	88.3 to 108 (65.1 to 79.6)
26. Capscrew*	M20×140	500 to 618 (369 to 456)
27. Capscrew*	M20×150	500 to 618 (369 to 456)
28. Capscrew*	M12×35	109 to 132 (80.4 to 97.4)
29. Capscrew*	M16×40	255 to 314 (188 to 232)
31. Capscrew*	M8×20	31.4 to 39.2 (23.2 to 28.9)

* Apply LOCTITE #243 to capscrew.

Assembly total weight	Approx. 394 kg (870 lbs) (Without motor)

Reference Only

8.3.3 SWING BEARING

BOLT TIGHTENING PROCEDURE

1. Lower frame side

(1) Tighten 2 bolts which are positioned 180 degrees apart each other on the lower frame side with 147 N·m (108 ft·lbs) torque.
(2) Tighten 2 bolts which are positioned 90 degrees apart from the previously tightened bolts with 147 N·m (108 ft·lbs) torque.
(3) Tighten diagonally positioned bolts with 147 N·m (108 ft·lbs) torque.
(4) Tighten all bolts with 423 to 517 kN (95,094 to 116,226 lbf) tightening force.
(Tightening torque shall be checked with axial force measurement.)

* Ref : tightening torque 2.5 to 3.06 kN·m (1,844 to 2,257 ft·lbs)

(5) After tightening to the lower frame, apply enough amount of molybdenum sulfide grease (Shell Alvania EP grease LF) on the gear tooth face.

2. Upper frame side

(1) Tighten 4 bolts on both side of front, both side of rear of the upper frame with 147 N·m (108 ft·lbs) torque.
(2) Tighten diagonally positioned bolts with 147 N·m (108 ft·lbs) torque in order.
(3) Tighten all bolts with 423 to 517 kN (95,094 to 116,226 lbf) tightening force.
(Tightening torque shall be checked with axial force measurement.)

* Ref : tightening torque 2.5 to 3.06 kN·m (1,844 to 2,257 ft·lbs)

The figure shows the outer race is rotated 180 degrees.

Assembly total weight	Approx. 1,013 kg (2,233 lbs)

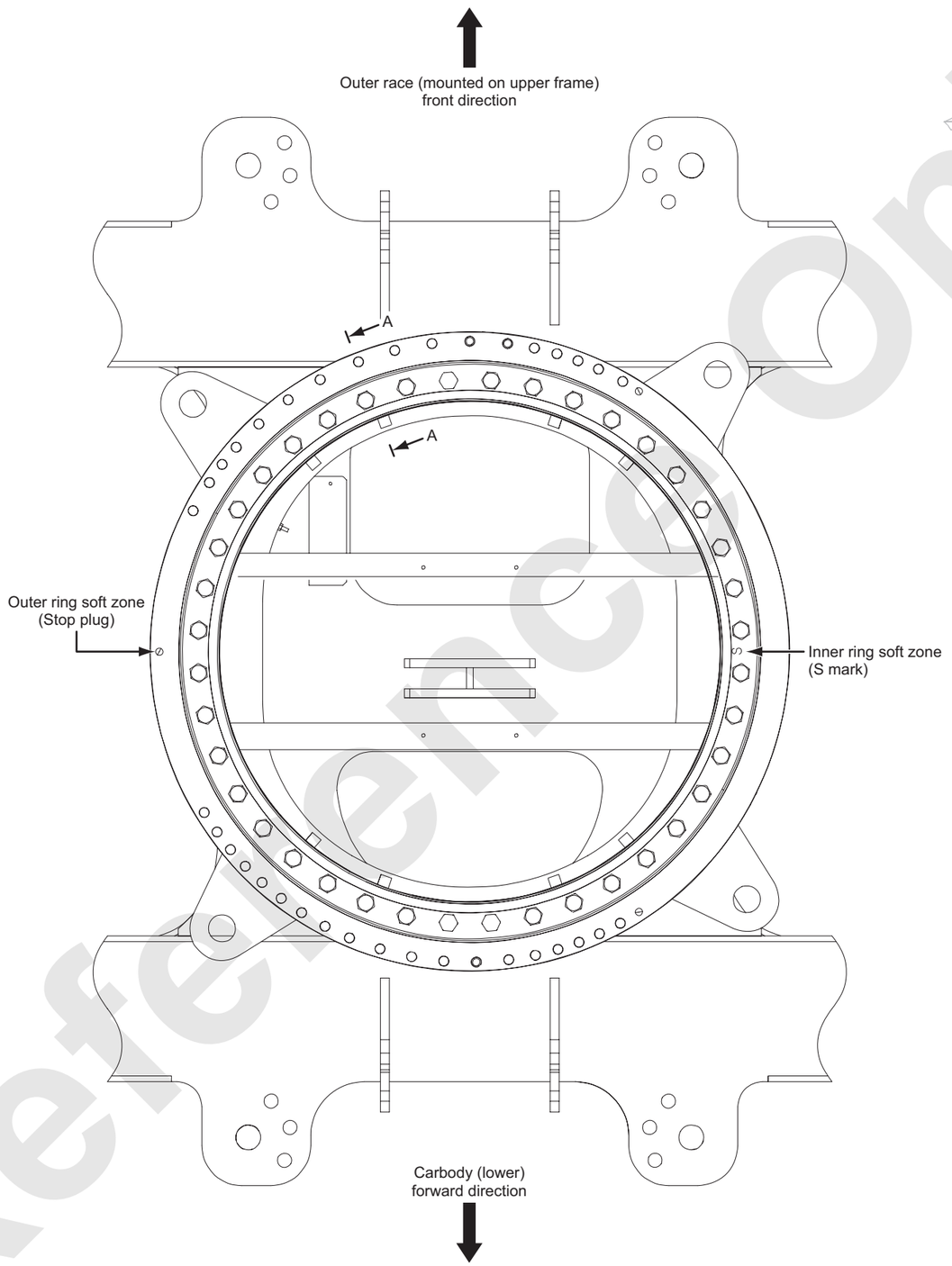

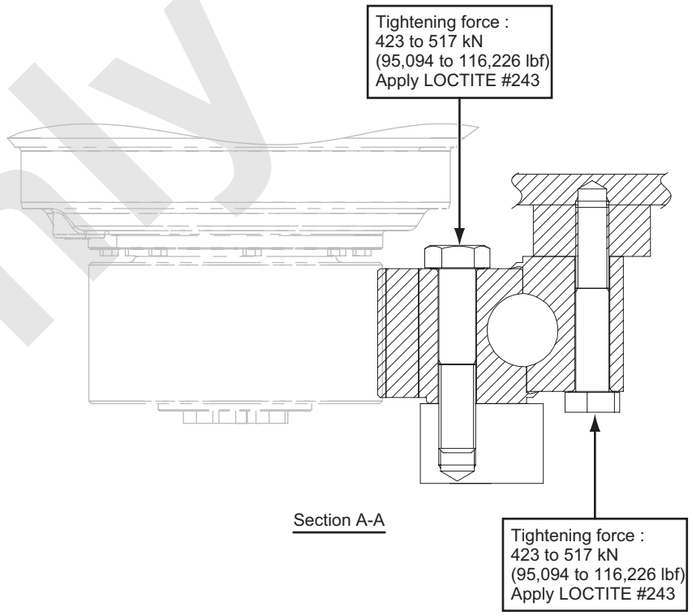

Reference only

8.3.4 SWING LOCK

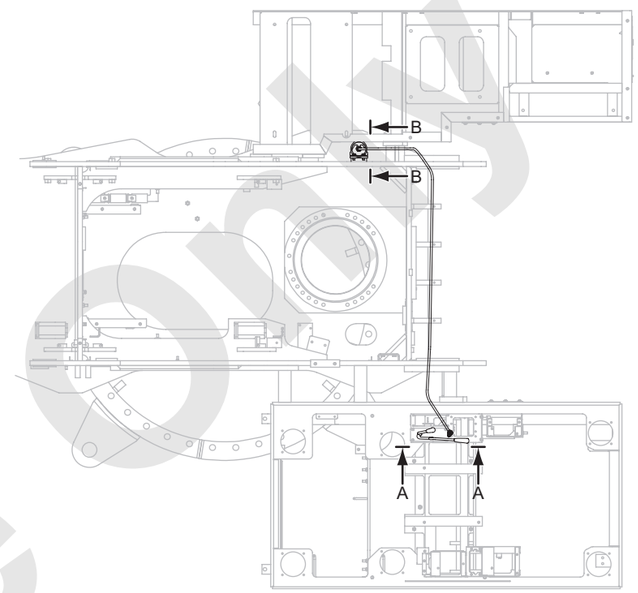

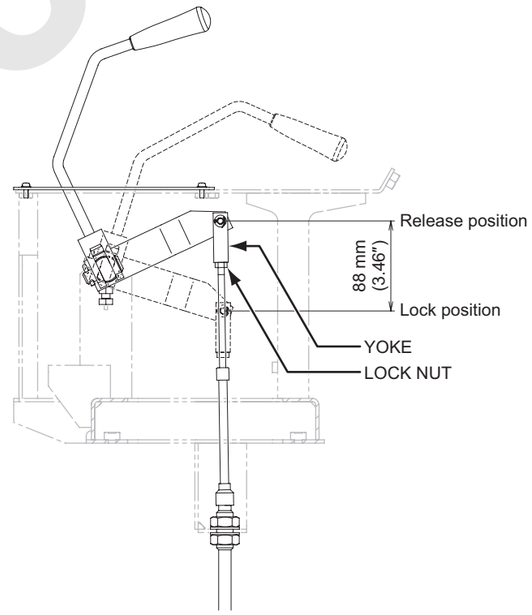

Section A-A

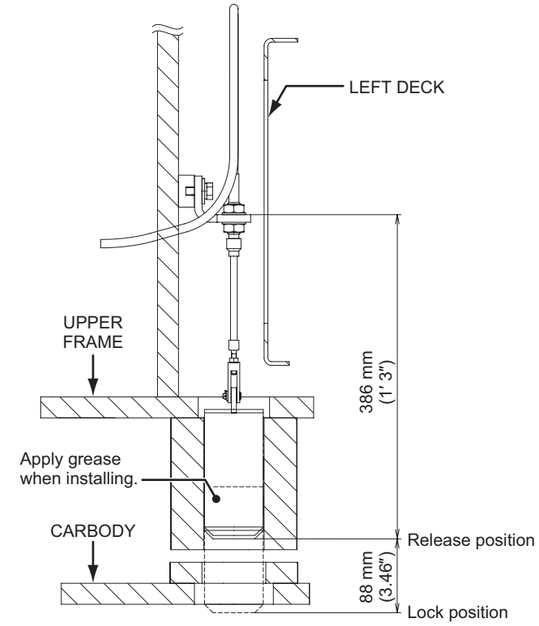

Section B-B

Reference Only

9. TRAVEL SYSTEM

9.1 APPARATUS AND COMPONENTS LOCATION 9-1
9.2 CONSTRUCTION AND FUNCTION 9-2
9.2.1 HYDRAULIC SCHEMATIC 9-2
9.2.2 TRAVELING (RIGHT SIDE FORWARD) 9-3
9.2.3 STOPPING 9-4
9.3 CRAWLER 9-5
9.3.1 DRIVE ASSEMBLY 9-5
9.3.2 MOTOR AND REDUCTION UNIT 9-6
9.3.3 ADJUSTMENT OF SHOE 9-9

Reference Only

Reference Only

9. TRAVEL SYSTEM

9.1 APPARATUS AND COMPONENTS LOCATION

The travel system consists of the main pump, the main control valves, the travel motors, the travel reduction units, the upper/lower rollers, the drive tumblers, idlers and shoes.
Pressurized oil from the main pumps (No.1 and No.2 pumps installed on the power divider) is controlled through the 2 main control valves.
This pressurized oil flows through the swivel joint and then into the left and right travel motors to run their respective motors.
A spring set/hydraulic release disk brake is installed on each of the two travel motors (built-in type).

As for circuit diagram and function of travel (right forward and stopping), refer to the article “9.2 CONSTRUCTION AND FUNCTION”.

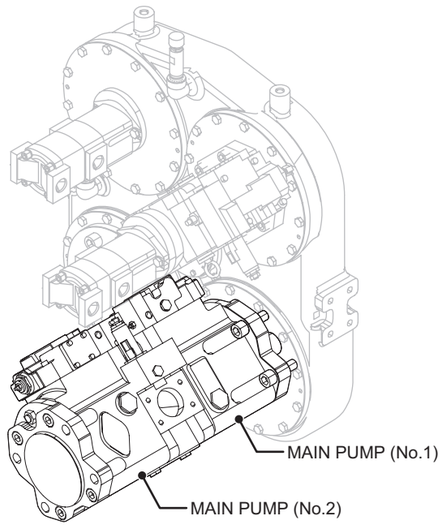

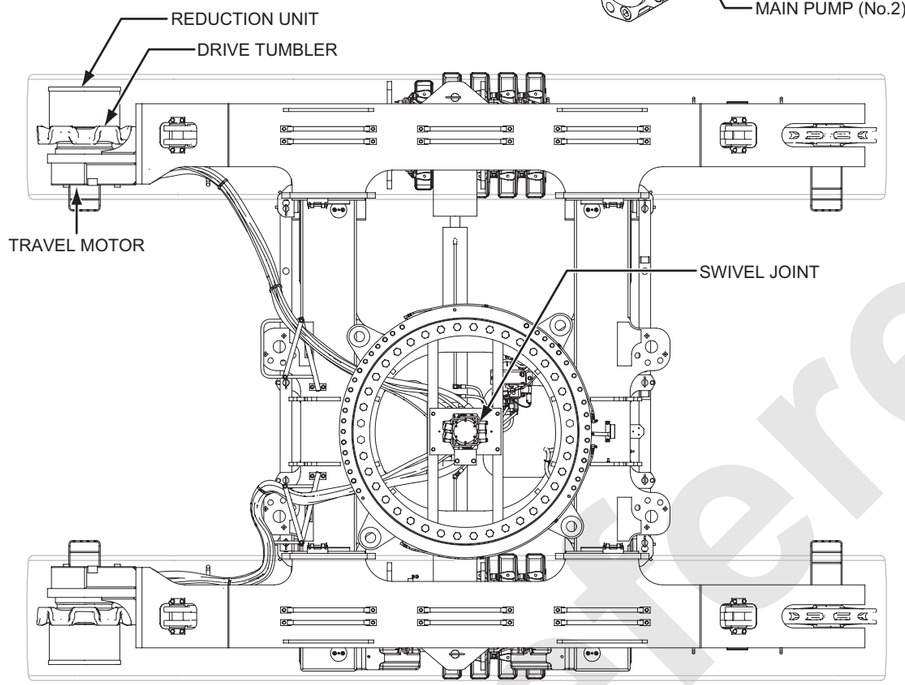

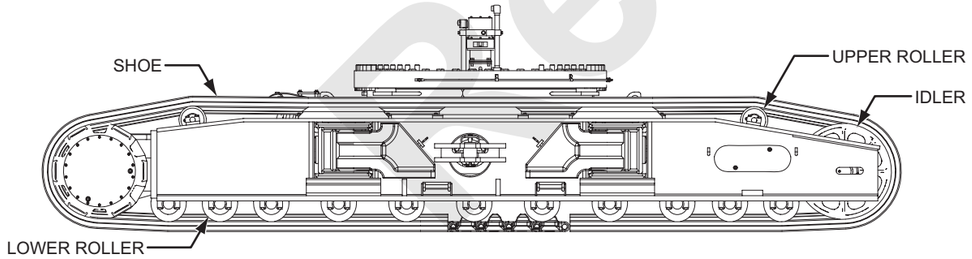

Reference Only

9.2 CONSTRUCTION AND FUNCTION

9.2.1 HYDRAULIC SCHEMATIC

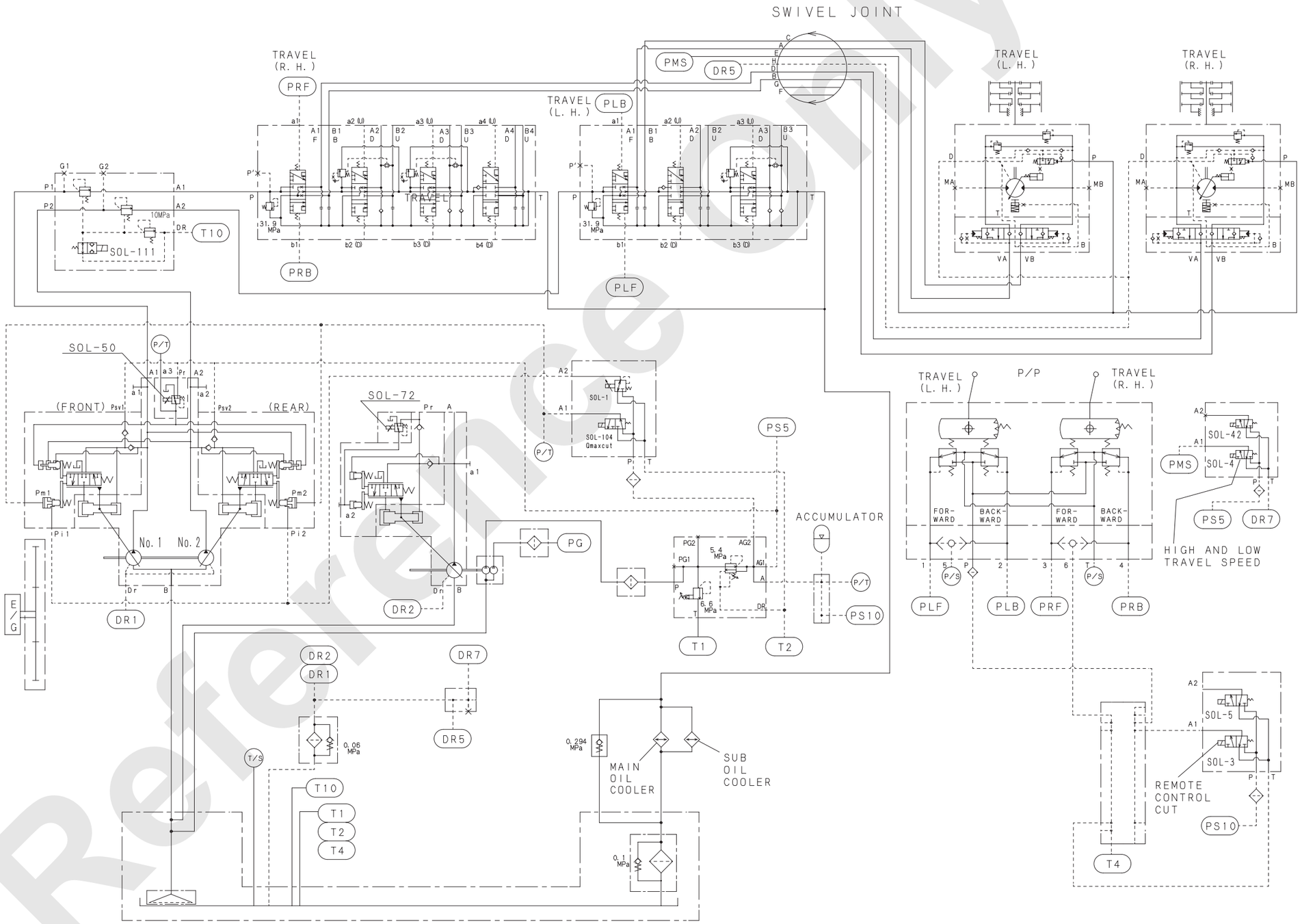

Reference only

9.2.2 TRAVELING (RIGHT SIDE FORWARD)

Traveling the right and left sides, to the forward and reverse are basically the same operation.
We will use a right side forward operation as the example here.
Pressurized oil from the No.1 pump is directed into the control valve.
The oil from the control pump, however, goes through the accumulator and into the travel-circuit's remote control valve, (The function lock lever remains in the "WORK" position [SOL-3 : ON position].)
When the right travel control lever is shifted to "FORWARD", the control oil runs through the remote control valve to the control valve's [PRF] port to shift the spool of the travel section.
The pressurized oil directed by the control valve then goes through the swivel joint and run into the travel motor.
At the same time, this oil runs into the pilot of the brake valve and the brake cylinder.

The oil in this cylinder releases the negative brake, and the oil in the brake valve pilot moves the spool, so that the pressurized oil releases the mechanical and hydraulic brake.
The pressurized oil that activated in the travel motor is free to return to the reservoir.

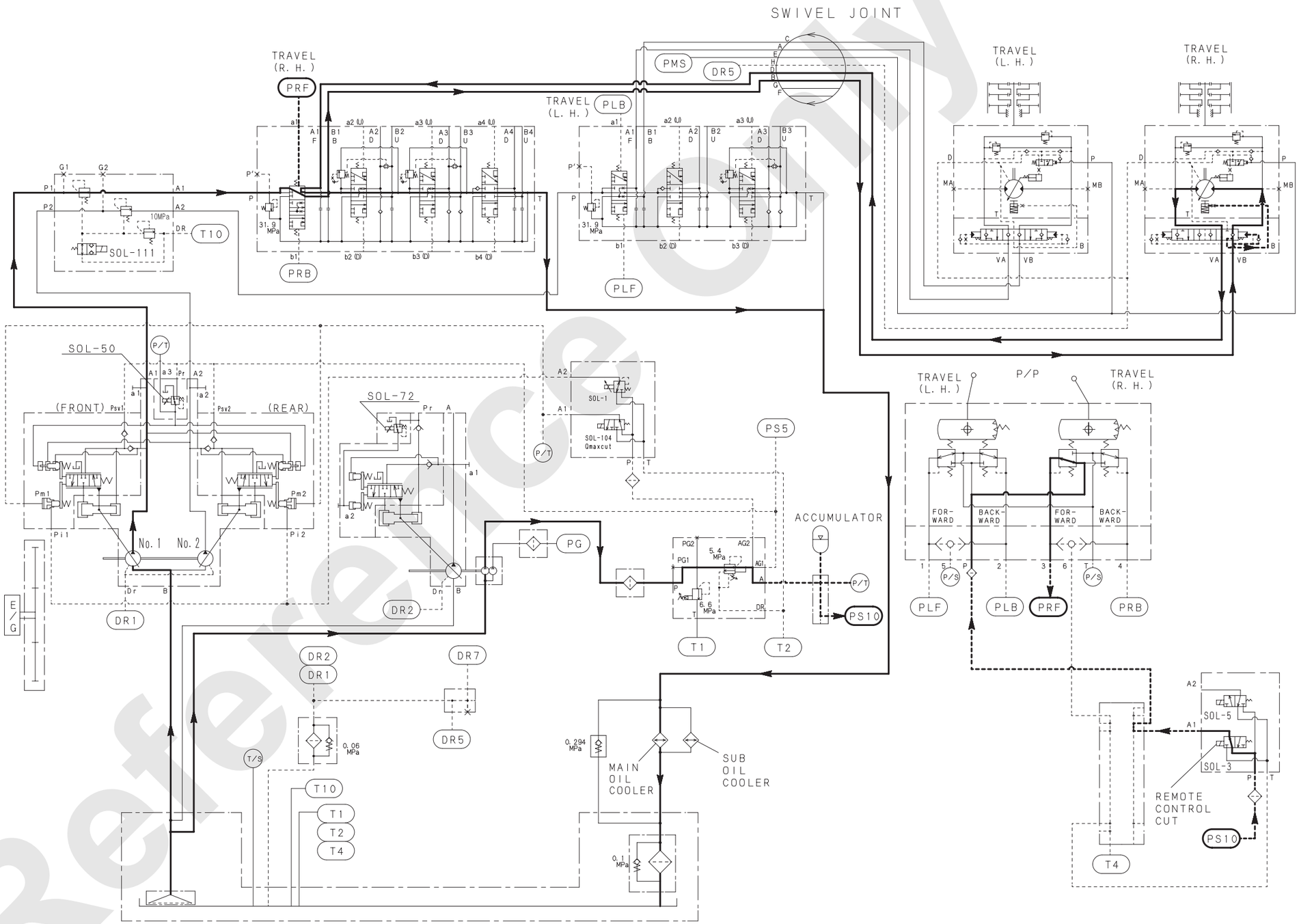

Reference Only

9.2.3 STOPPING

When the right travel control lever is shifted back to neutral from travel position, the flow from the remote control valve is cut and the spool of the control valve moves to neutral position.
At the same time, the pilot pressure on the travel brake valve is discontinued, and the spool in the brake valve also moves to neutral position.
At this time inertia may continue momentarily to rotate the travel motor.
This creates negative pressure on the supply side and high pressure on the return side.
Therefore, the supply side is connected to the reservoir in neutral.
If extreme pressure develops on the return side, an over load relief valve will open to protect the circuit.
At the same time, the pressurized oil in the brake cylinder is returned to the reservoir, and the parking brake engages slowly.

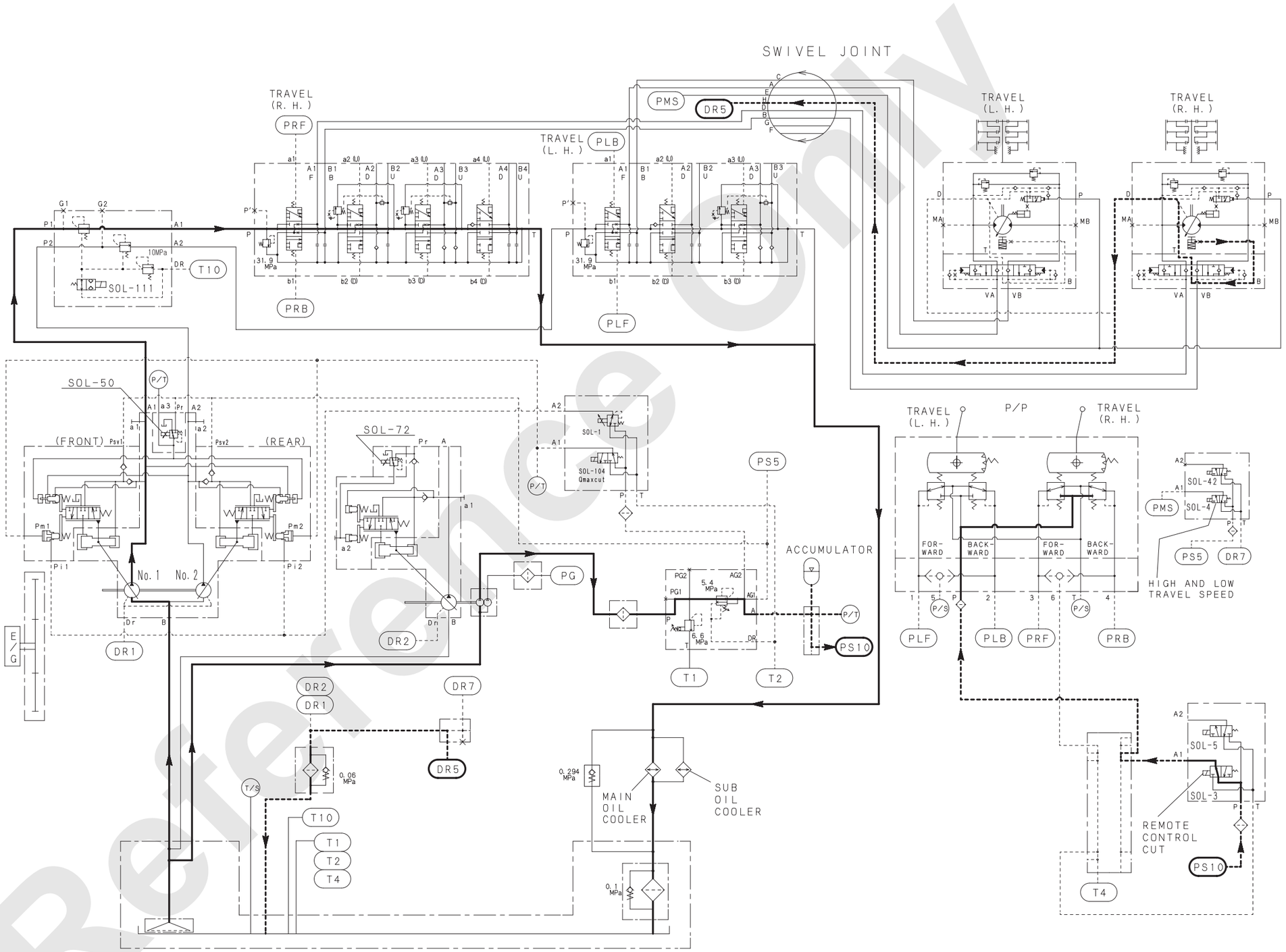

Reference Only

9.3 CRAWLER

9.3.1 DRIVE ASSEMBLY

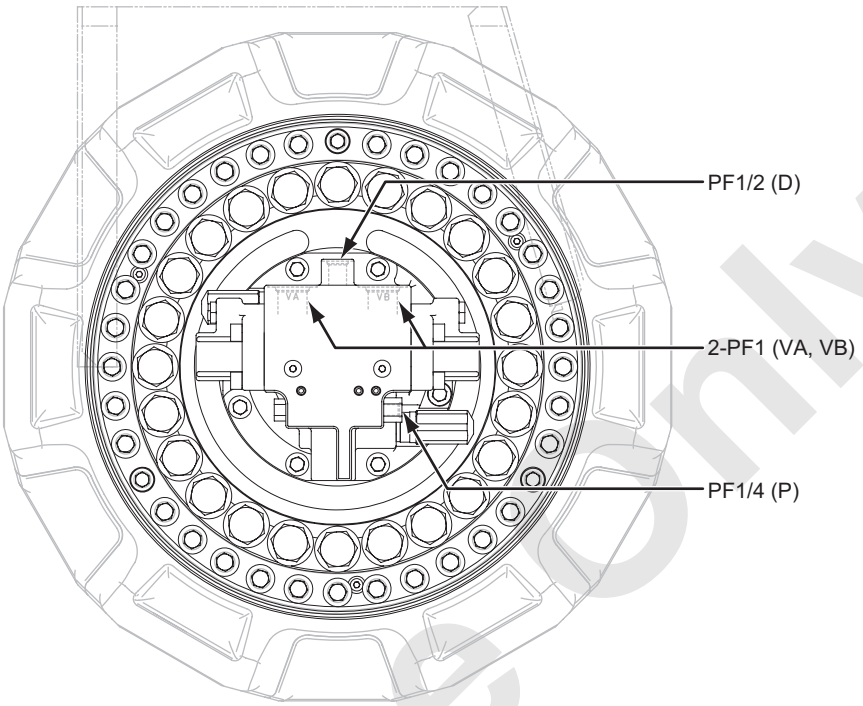

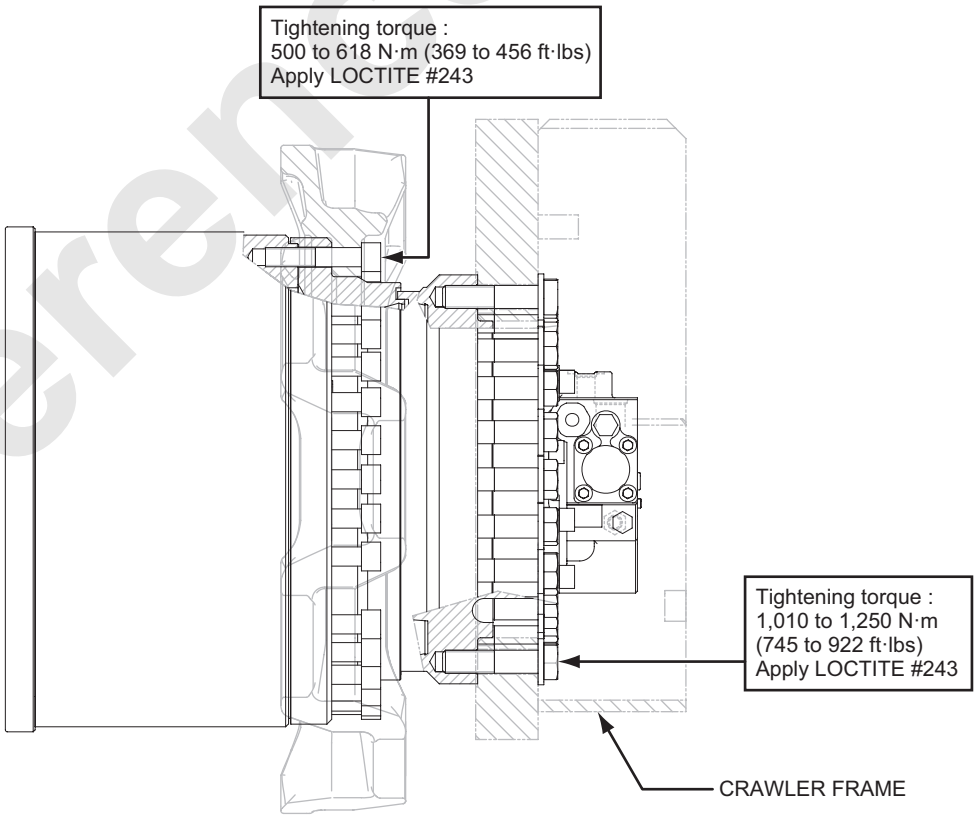

Assembly weight	Approx. 510 kg (1,120 lbs)

Reference only

9.3.2 MOTOR AND REDUCTION UNIT

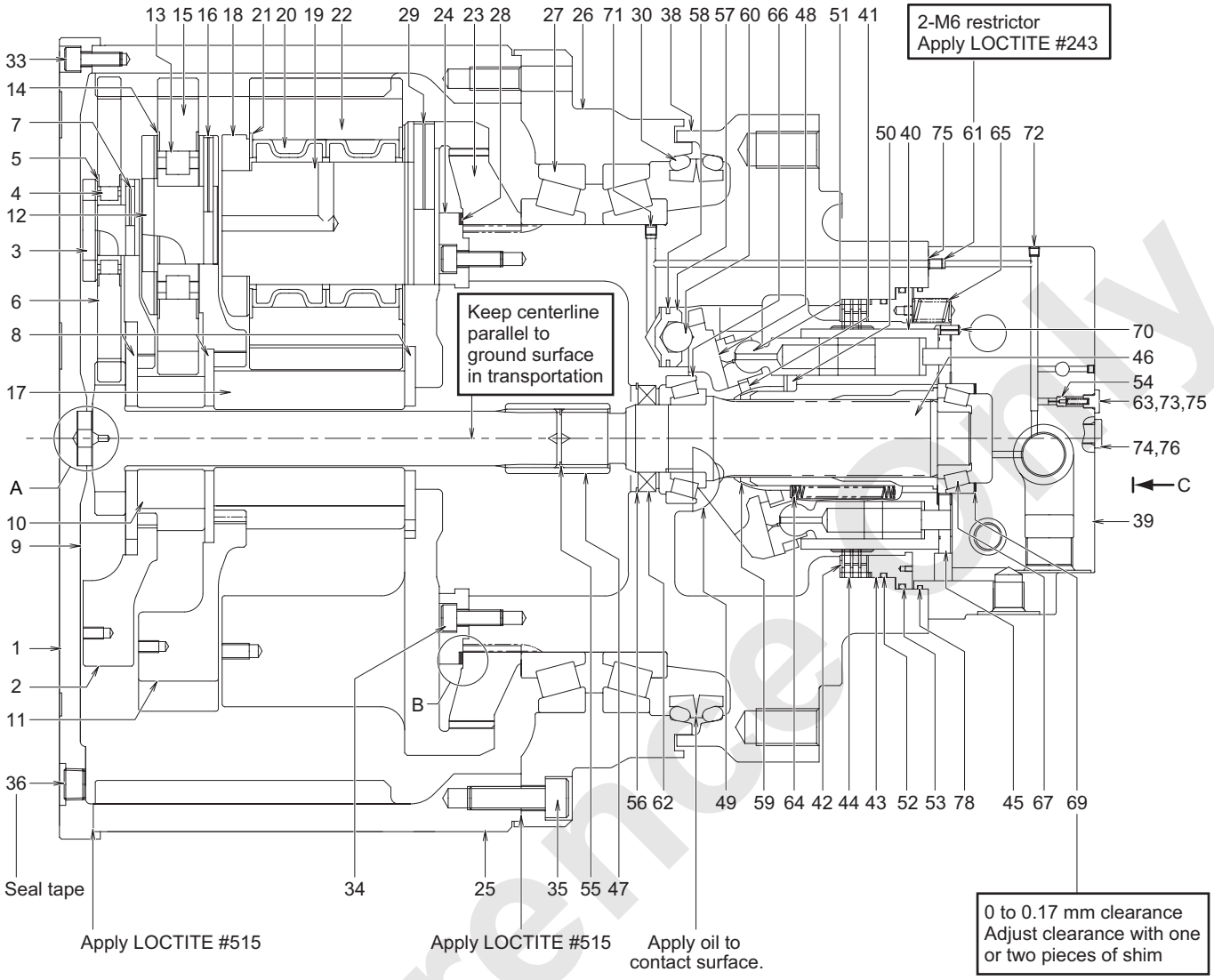

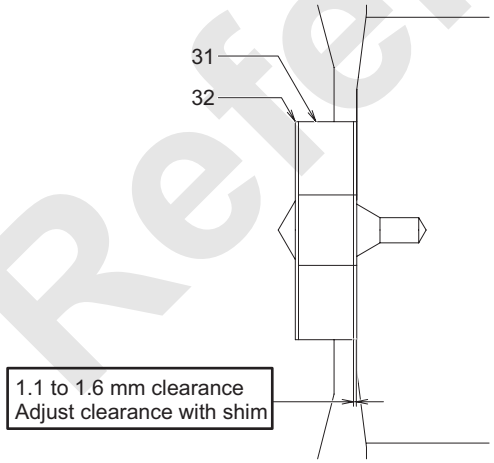

Detail A

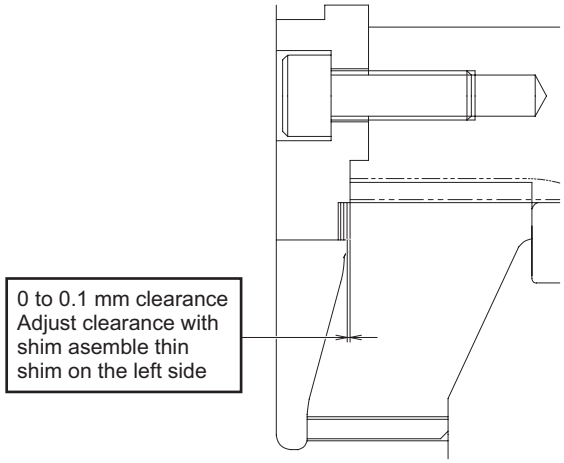

Detail B

Reference Only

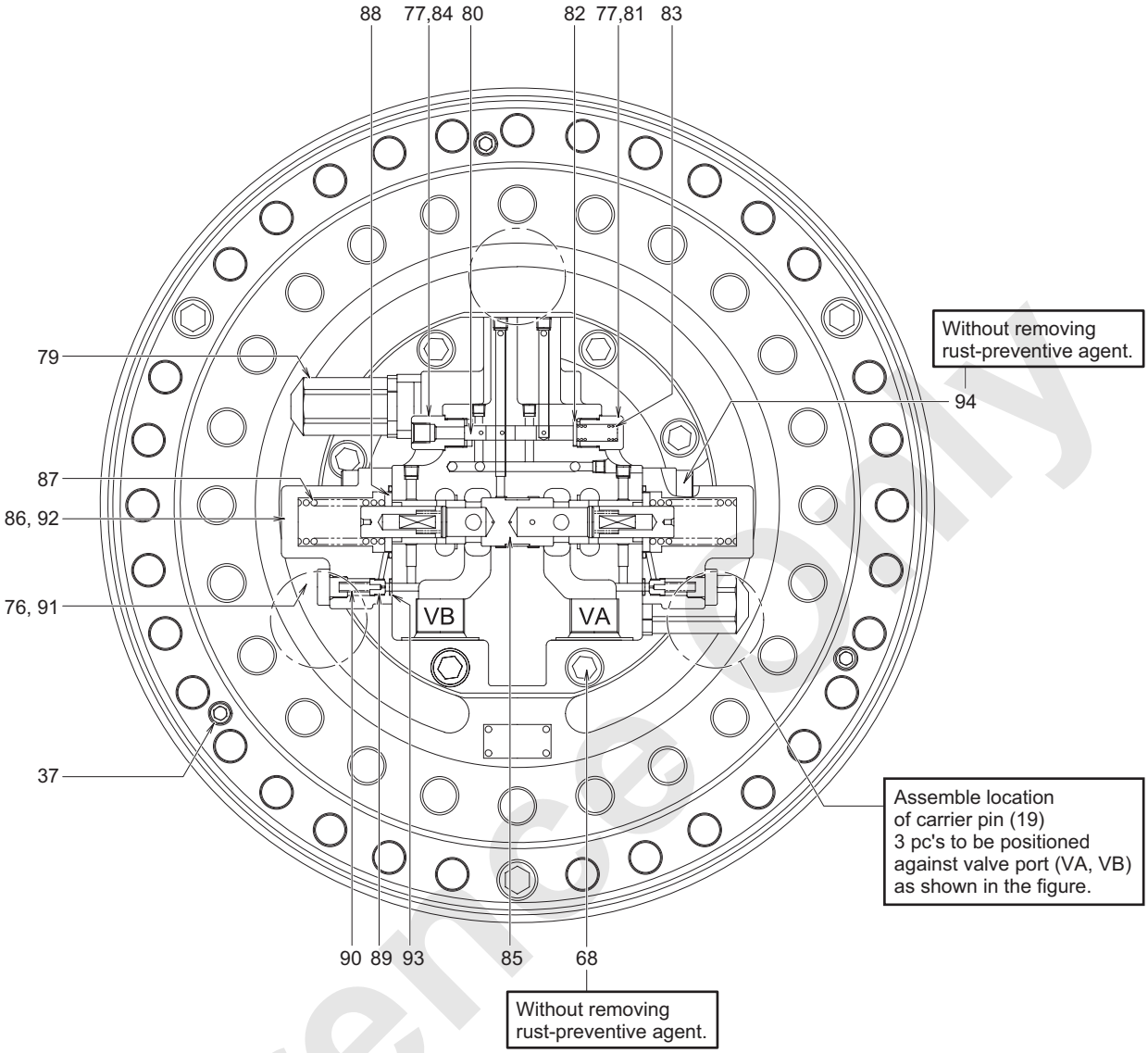

Section C-C

Assembly weight	Approx. 510 kg (1,120 lbs)

Reference only

1. Cover
2. Carrier
3. Carrier pin
4. Bearing
5. Thrust washer
6. Planetary gear
7. Spring pin
8. Spacer
9. Sun gear
10. Sun gear
11. Carrier
12. Carrier pin
13. Bearing
14. Thrust washer
15. Planetary gear
16. Spring pin
17. Sun gear
18. Carrier
19. Carrier pin
20. Niddle bearing
21. Thrust washer
22. Planetary gear
23. Coupling
24. Holder
25. Ring gear
26. Housing
27. Taped roller bearing
28. Shim
29. Spring pin
30. Floating seal
31. Thrust ring
32. Shim
33. Capscrew
34. Capscrew
35. Capscrew
36. Capscrew
37. Capscrew
38. Casing
39. Rear cover
40. Cylinder block
41. Shoe retainer
42. Friction plate
43. Brake piston
44. Separated plate
45. Valve plate
46. Shaft
47. Coupling
48. Swash plate
49. Pivot
50. Spring holder
51. Piston assy
52. D-ring
53. D-ring
54. Check valve
55. Retaining ring of C type
56. Retaining ring
57. Shifter piston
58. Piston seal
59. Ball joint
60. Ball
61. M6 restrictor
62. Oil seal
63. Spring of check valve
64. Spring of cylinder
65. Spring of brake
66. Bearing
67. Bearing
68. Hex. socket head bolt
69. Shim
70. Parallel pin
71. Plug
72. Plug
73. Plug
74. Plug
75. O-ring
76. O-ring
77. O-ring
78. O-ring
79. Overload relief assy
80. Spool
81. Plug
82. Spring holder
83. Spring
84. Connector
85. Spool assy
86. Cover
87. Spring
88. Spring holder
89. Restrictor
90. Spring
91. Plug
92. O-rings
93. O-ring
94. Socket head cap screw

TIGHTENING TORQUE TABLE

Name	Size	Tightening torque : N·m (ft·lbs)	Remarks
33. Capscrew	M10 × 30	61.74 to 75.46 (45.5 to 55.7)	Apply LOCTITE #243
34. Capscrew	M12 × 30	106.2 to 129.8 (78.3 to 95.7)	Apply LOCTITE #243
35. Capscrew	M16 × 45	264.6 to 323.4 (195 to 239)	Apply LOCTITE #243
36. Capscrew	R (PT) 3/4	88.29 to 107.91 (65.1 to 79.6)	
37. Capscrew	M8 × 35	30.38 to 38.22 (22.4 to 28.2)	Apply LOCTITE #243
68. Hex. socket head bolt	M16 × 45	206.5 to 254.5 (152 to 187)	
71. Plug	NPT 1/16	11.74 to 15.66 (8.7 to 11.6)	Apply LOCTITE #243
72. Plug	NPT 1/16	9.81 to 11.8 (7.2 to 8.7)	
73. Plug	G (PF) 1/8	12.74 to 16.66 (9.4 to 13.3)	
74. Plug	G (PF) 1/4	26.46 to 32.34 (19.5 to 23.9)	
79. Overload relief assy		98.1 to 118 (72.4 to 87)	
81. Plug	G3/8	49 to 58.8 (36.1 to 43.4)	
84. Connector		49 to 58.8 (36.1 to 43.4)	
91. Plug		24.5 to 29.4 (18.1 to 21.7)	
94. Socket head cap screw	M12 × 35	88.29 to 107.91 (65.1 to 79.6)	

Reference Only

9.3.3 ADJUSTMENT OF SHOE

If the crawler tension is high, the shoes wear quickly and connection between two shoes could break.
On the other hand, if the tension too loose, the shoes may run off the drive tumbler or idler wheel during traveling.
To prevent these, it is necessary to adjust shoe tension.

Travel forward about 7 m (23 ft.) with the drive tumbler at rear and then adjust the shim to make upper shoe slackening to be 10 to 20 mm (3/8 to 7/8 in.).

To adjust shoe tension, proceed as follows :

1. Travel the machine forward about one crawler length so that the slack in the crawler shoes appear on the top of the crawler.

2. Remove all the shims from shim pack (a).

3. Position the hydraulic jack between the bracket and block of the side frame.
   Operate the jack to push the idler wheel and remove the slack in the shoes.

4. Insert the shims removed from pack (a) in step (2) into the vacant room of pack (b).
   Insert the remaining shims into pack (a).

5. After the shims are installed, install the mud cover (c) on the shim installation area (a).
   Install the cover (d) to the elongated hole area of both crawler frames.

⚠ CAUTION

Equalize the tension in right and left crawler tracks.

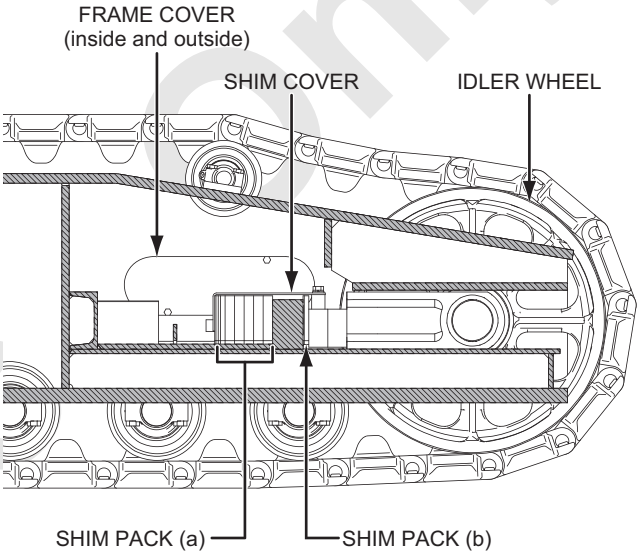

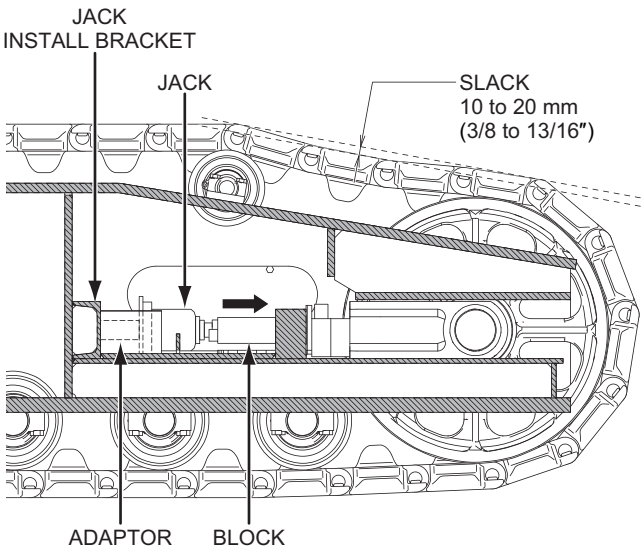

Reference Only

Reference Only

10. ELECTRIC SYSTEM

10.1 ELECTRICAL 10-3
10.1.1 ELECTRICAL WIRING SCHEMATIC 10-3
10.1.2 CONNECTOR LAYOUT 10-24
10.1.3 LOCATION AND USE OF FUSE 10-162
10.1.4 WIPER CONTROL RELAY 10-167
10.1.5 PRESSURE SWITCH (FOR TRAVEL MOTION DETECT) 10-168
10.1.6 PRESSURE SWITCH (FOOT BRAKE) 10-169
10.1.7 PRESSURE SENSOR 10-170
10.1.8 INCLINATION SENSOR 10-173
10.1.9 BUZZER UNIT 10-174
10.1.10 RELAY BOX 10-175
10.1.11 RELAY BOX 10-186
10.1.12 LOAD DETECTOR (CRANE) 10-189
10.1.13 ANGLE SENSOR 10-190
10.1.14 HOW TO CHECK THE FAILURE CONTENTS 10-192
10.1.15 WARNING DISPLAY CONDITION 10-196
10.1.16 ENGINE ECU 10-207
10.2 LOAD SAFETY DEVICE 10-210
10.2.1 CONFIGURATION OF SCREENS 10-211
10.2.2 SYSTEM DAIGRAM 10-212
10.2.3 MONITOR DISPLAY 10-213
10.2.4 DETAIL OF ML CONTROLLER 10-220
10.2.5 SHIFTING TO MAINTENANCE SCREEN 10-233
10.2.6 INPUT / OUTPUT SIGNAL 10-235
10.2.7 ML FUNCTION SETTING 10-244
10.2.8 DATA COPY, FORMAT 10-246
10.2.9 LANGUAGE, UNIT SETTING 10-250
10.2.10 ML ADJUSTMENT (NORMAL) 10-251
10.2.11 ML ADJUSTMENT (TEMPORARY) 10-274
10.2.12 OPERATION PROGRESS 10-275
10.2.13 VERSION INFORMATION 10-278
10.2.14 FAILURE HISTORY 10-279
10.2.15 ADJUSTMENT DATA 10-282
10.2.16 DOWNLOAD ML PROGRAM 10-288
10.2.17 DOWNLOAD OF MONITOR PROGRAM 10-290
10.3 MAIN CONTROLLER 10-295
10.3.1 ARRANGEMENT OF MAIN CONTROLLER 10-295
10.3.2 COMPOSITION OF SYSTEM 10-296
10.3.3 FUNCTION OF MAIN CONTROLLER 10-297
10.3.4 MAIN CONTROLLER 1, 2 (HARDWARE) 10-333

Reference Only

10.3.5 SPECIFICATIONS OF MAIN CONTROLLER INPUT/OUTPUT 10-334
10.3.6 ARRANGEMENT OF MAIN CONTROLLER CONNECTOR PIN 10-348
10.3.7 ADJUSTMENT OF MAIN CONTROLLER 10-364
10.3.8 CONTROLLER MALFUNCTION EMERGENCY MEASURES 10-369

Reference Only

10. ELECTRIC SYSTEM

⚠ CAUTION

Ensure to turn the key switch OFF to avoid any adverse effect to the electric devices when the connectors are in the process of connecting or disconnecting.
Failure to observe this precaution may lead to damage parts.

⚠ CAUTION

When disconnect the connector, hold it with both hands and draw it straight, while pressing down the catch.
DO NOT pull on the cable.
Otherwise, lead to the breaking of a wire.
NEVER twist or pry the connector.
Otherwise, its internal female terminal will be expanded, lead to faulty connection.

⚠ CAUTION

When connection in the connector, fully insert it until the catch is engaged (clicks into position).

Reference Only

⚠ CAUTION

Otherwise, faulty connection can occur later.
When performing a continuity test or voltage measurement on the connector, follow the procedure below.

- **Square connector**
  For easy measurement, place the measurement probes of the multi tester onto the pins of male side connector from the electric wire inlet side.
  NEVER insert the probe of the multi tester into the socket of the female side connector.
  Otherwise, faulty connection can occur later.

- **Round waterproof connector**
  The male side connector has waterproof construction, and the measurement probe of the multi tester cannot touch its pins from the electric wire inlet side.
  Therefore, place the measurement probes onto the terminals side connector.
  NEVER forcibly insert the measurement probe.
  Otherwise, faulty connection can occur later.
  Short-circuiting across terminals inside a connector can damage electronic components.
  Be absolutely careful to prevent short-circuit.

Reference Only

10.1 ELECTRICAL

10.1.1 ELECTRICAL WIRING SCHEMATIC

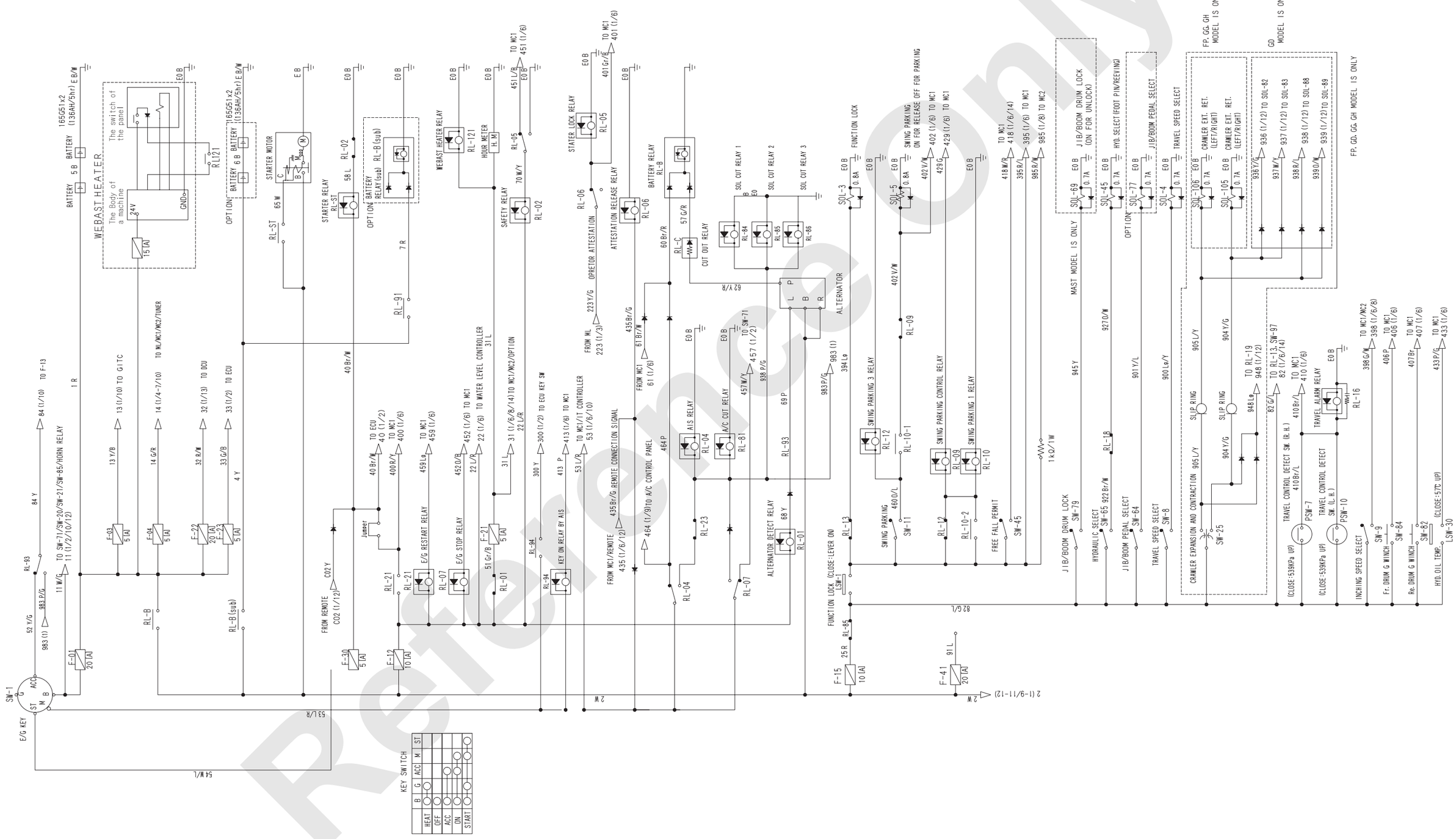

Reference only

(1/21)

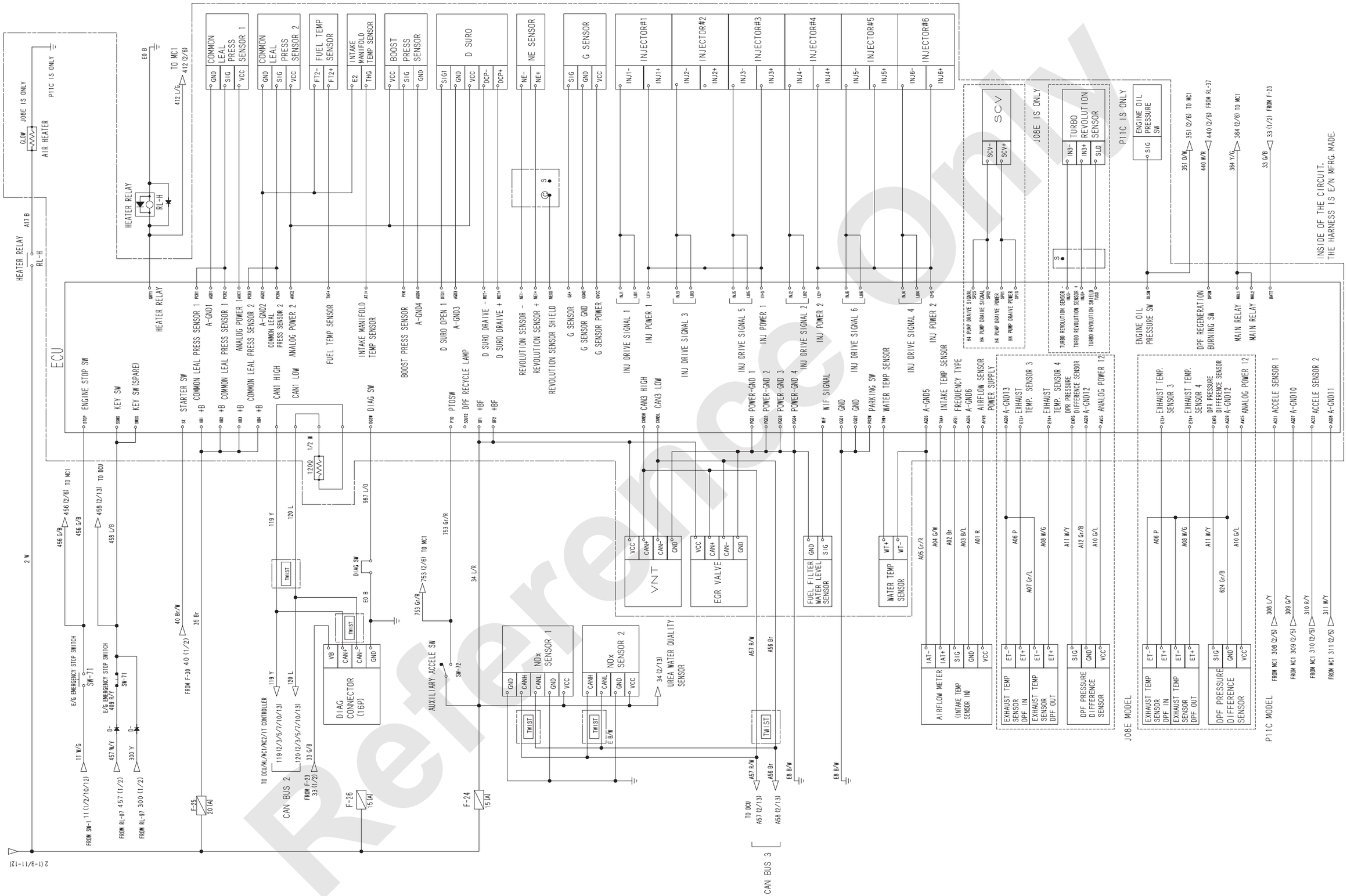
ECU
COMMON LEAL PRESS SENSOR 1
COMMON LEAL PRESS SENSOR 2
FUEL TEMP SENSOR
INTAKE MANIFOLD TEMP SENSOR
BOOST PRESS SENSOR
D SURO
NE SENSOR
G SENSOR
INJECTOR#1
INJECTOR#2
INJECTOR#3
INJECTOR#4
INJECTOR#5
INJECTOR#6
SCV
TURBO REVOLUTION SENSOR
ENGINE OIL PRESSURE SW
HEATER RELAY
AIR HEATER
J08E IS ONLY
P11C IS ONLY
INSIDE OF THE CIRCUIT. THE HARNESS IS E/N MFRG. MADE.
ENGINE STOP SW
KEY SW
KEY SW (SPARE)
STARTER SW
COMMON LEAL PRESS SENSOR 1
COMMON LEAL PRESS SENSOR 2
CAN1 HIGH
CAN1 LOW
DIAG SW
PTOSW
DPF RECYCLE LAMP
CAN3 HIGH
CAN3 LOW
INJ DRIVE SIGNAL 1
INJ POWER 1
INJ DRIVE SIGNAL 3
INJ DRIVE SIGNAL 5
INJ POWER 2
INJ DRIVE SIGNAL 6
INJ DRIVE SIGNAL 4
WIF SIGNAL
PARKING SW
WATER TEMP SENSOR
INTAKE TEMP SENSOR
FREQUENCY TYPE AIRFLOW SENSOR POWER SUPPLY
EXHAUST TEMP. SENSOR 3
EXHAUST TEMP. SENSOR 4
DPR PRESSURE DIFFERENCE SENSOR
ANALOG POWER 12
ACCELE SENSOR 1
ACCELE SENSOR 2
DPF REGENERATION BURNING SW
MAIN RELAY
E/G EMERGENCY STOP SWITCH
CAN BUS 2
CAN BUS 3
DIAG CONNECTOR (16P)
AUXILIARY ACCELE SW
NOx SENSOR 1
NOx SENSOR 2
UREA WATER QUALITY SENSOR
VNT
EGR VALVE
FUEL FILTER WATER LEVEL SENSOR
WATER TEMP SENSOR
AIRFLOW METER (INTAKE TEMP SENSOR IN)
EXHAUST TEMP SENSOR DPF IN
EXHAUST TEMP SENSOR DPF OUT
DPF PRESSURE DIFFERENCE SENSOR
J08E MODEL
P11C MODEL
TO MC1
TO DCU
TO DCU/MC1/MC2/IT CONTROLLER
FROM MC1 308 (2/5)
FROM MC1 309 (2/5)
FROM MC1 310 (2/5)
FROM MC1 311 (2/5)
F-25 20 [A]
F-26 15 [A]
F-24 15 [A]
1200
1/2 W
2 W

(2/21)

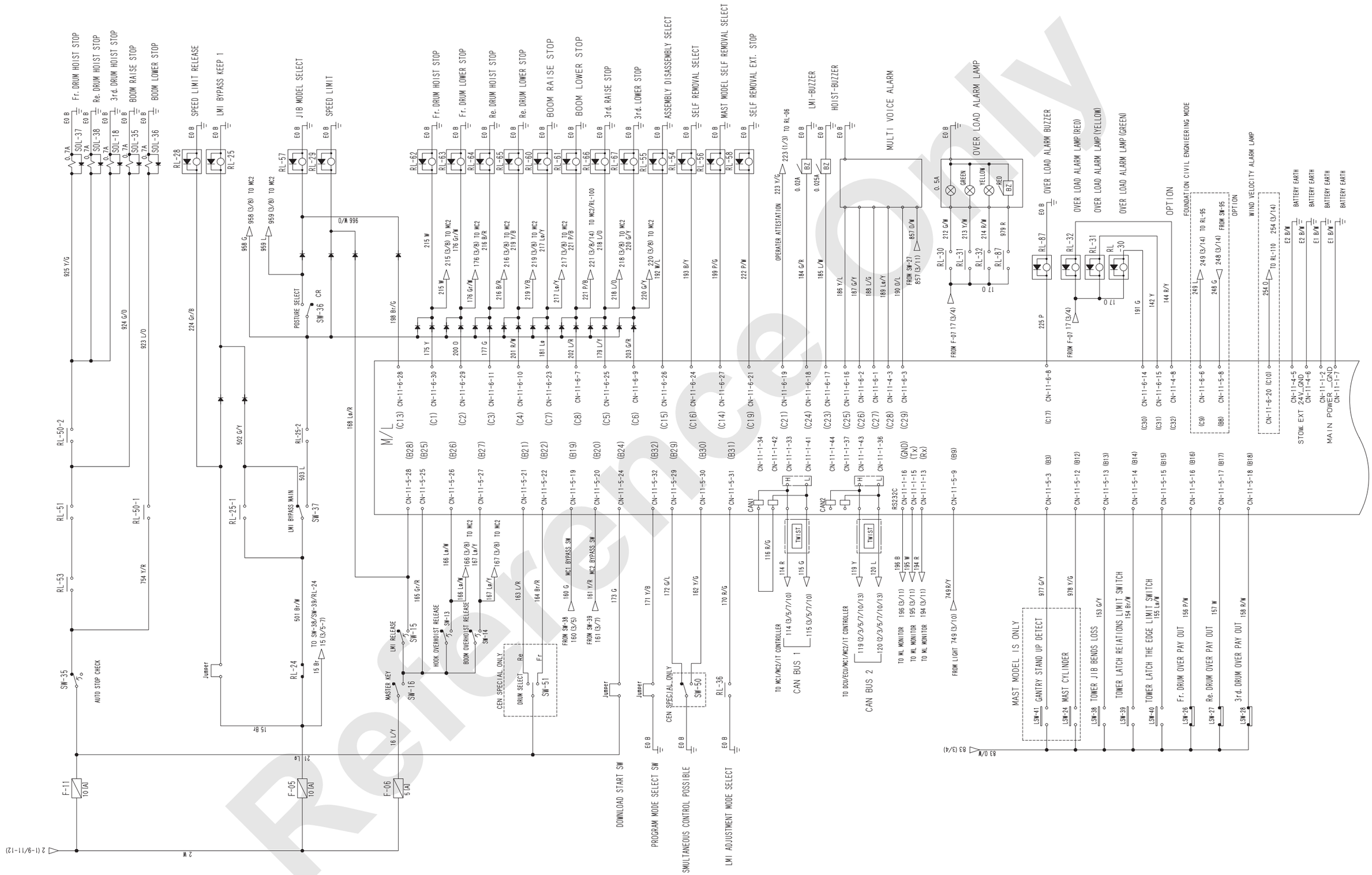

Reference Only

(3/21)

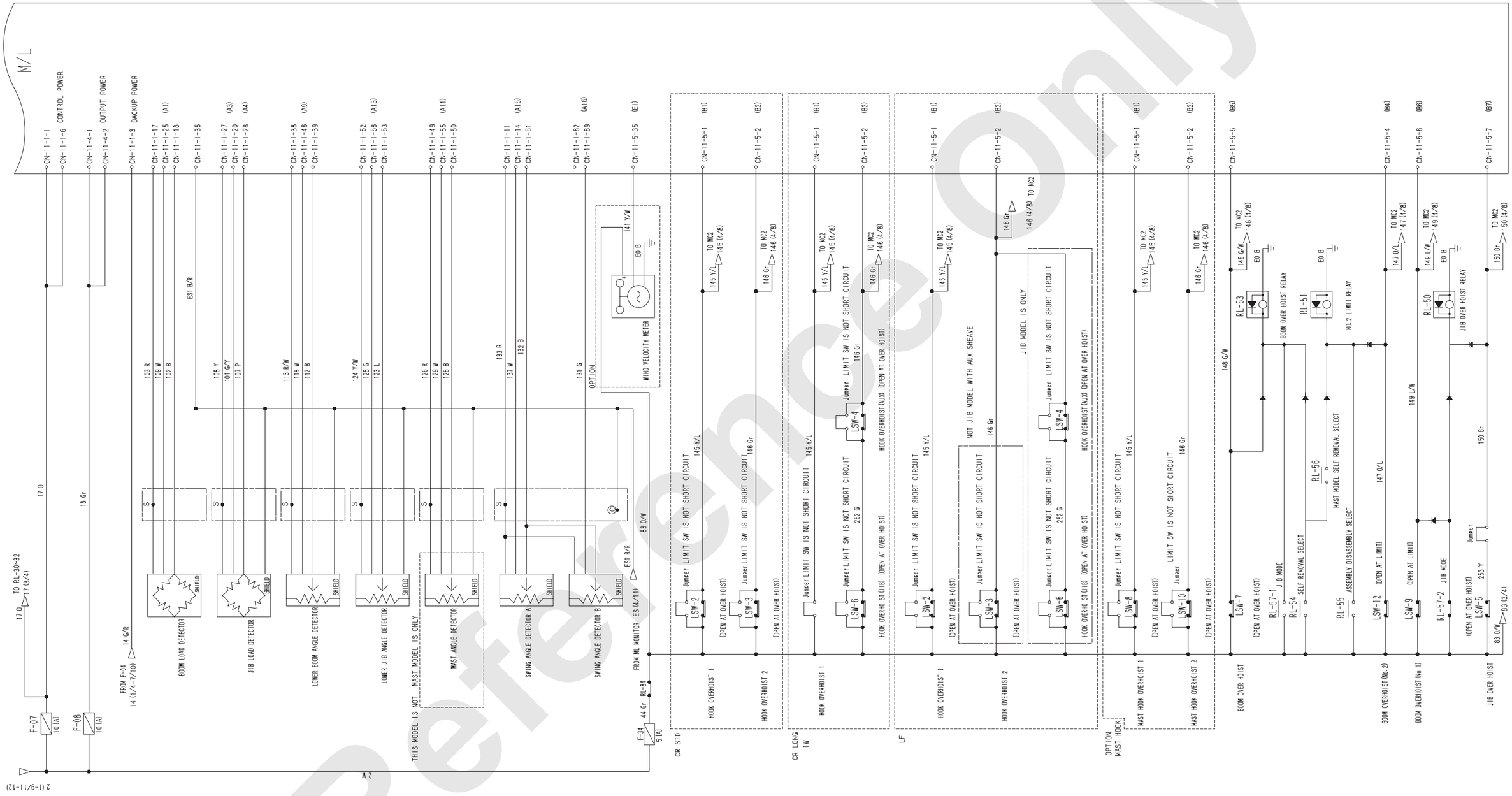

Reference Only

(4/21)

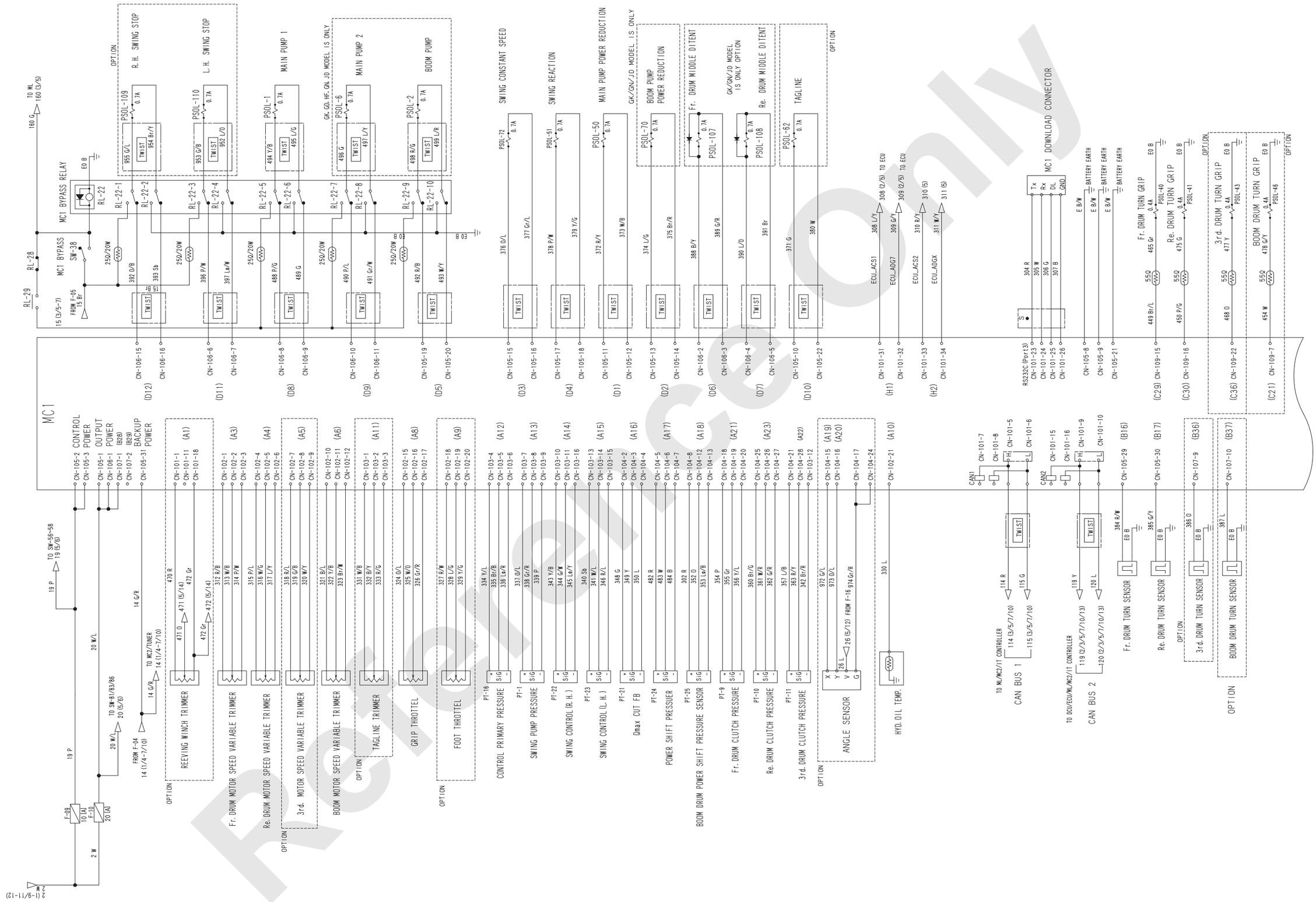

(5/21)

Reference Only

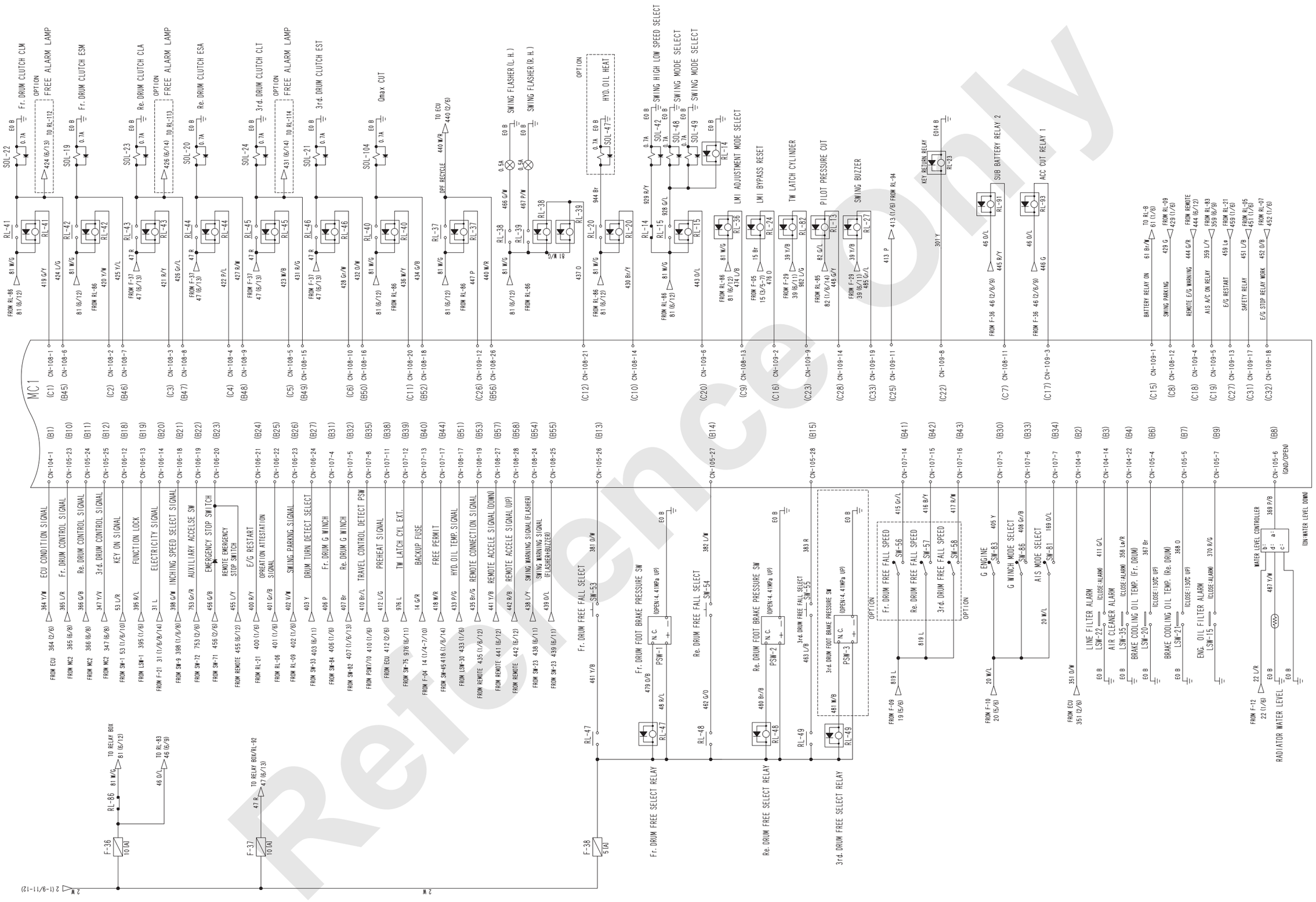

(6/21)

Reference Only

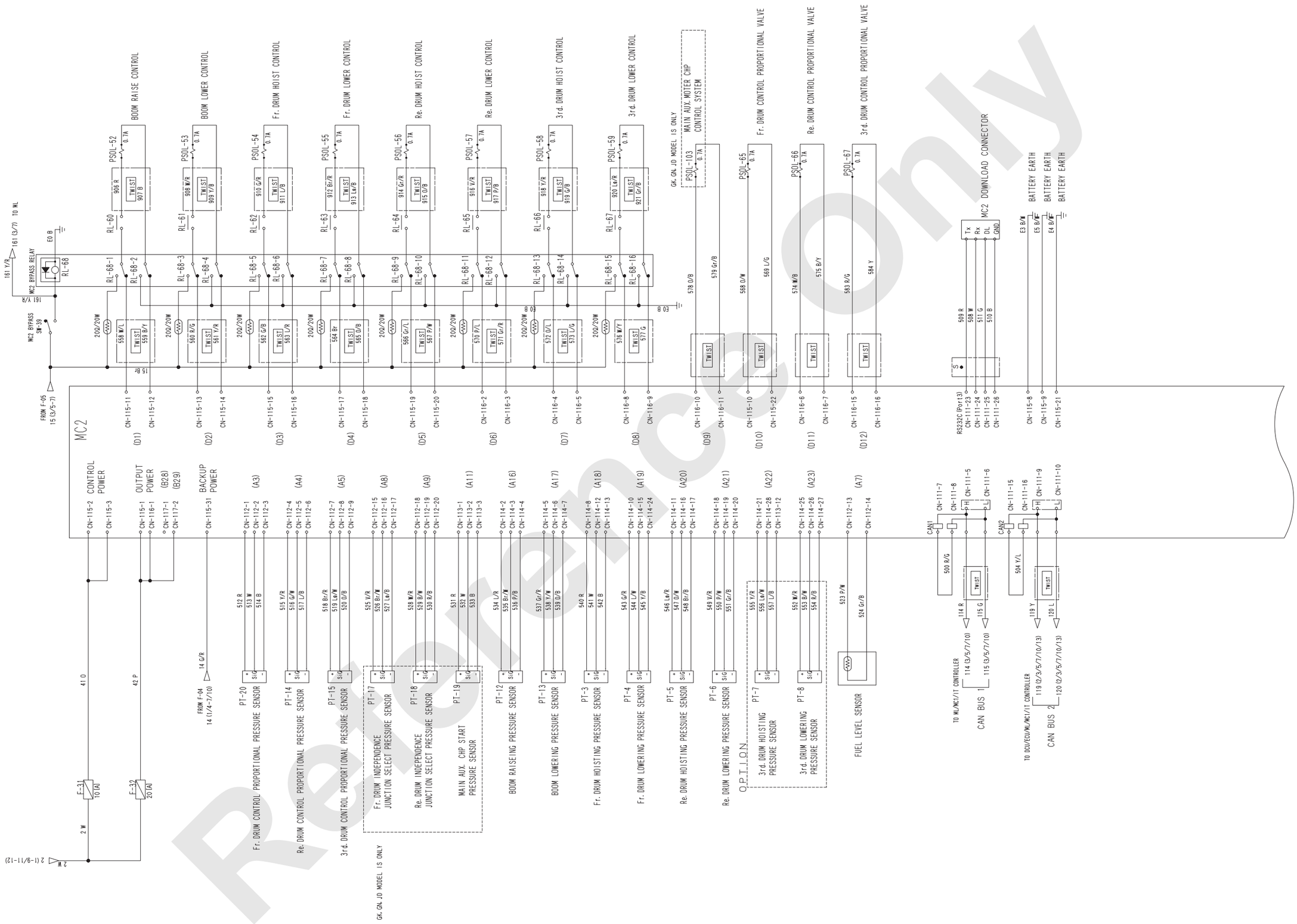

Reference Only

(7/21)

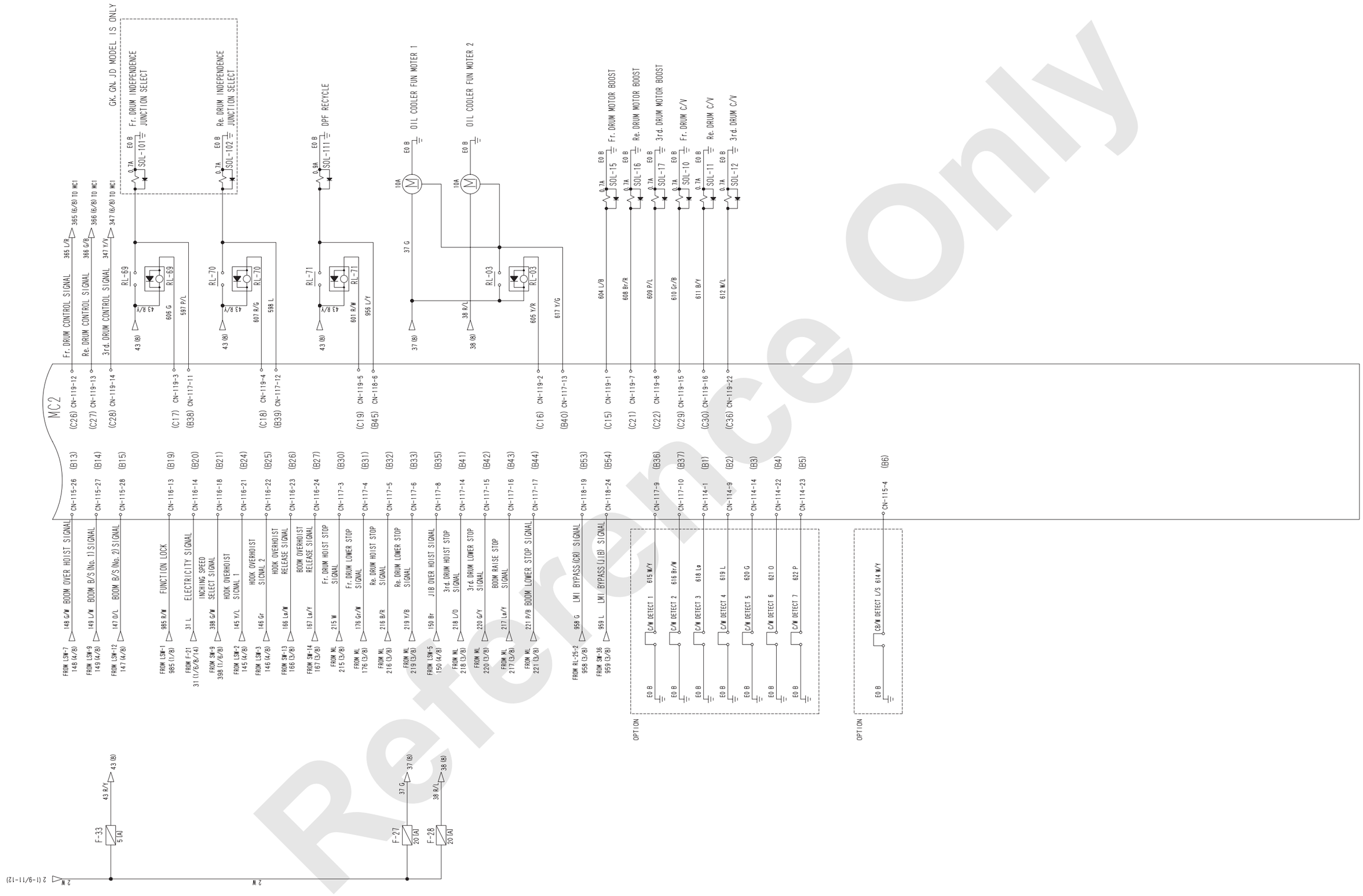
GK. GN. JD MODEL IS ONLY
Fr. DRUM INDEPENDENCE JUNCTION SELECT
Re. DRUM INDEPENDENCE JUNCTION SELECT
DPF RECYCLE
OIL COOLER FUN MOTER 1
OIL COOLER FUN MOTER 2
Fr. DRUM MOTOR BOOST
Re. DRUM MOTOR BOOST
3rd. DRUM MOTOR BOOST
Fr. DRUM C/V
Re. DRUM C/V
3rd. DRUM C/V
Fr. DRUM CONTROL SIGNAL
Re. DRUM CONTROL SIGNAL
3rd. DRUM CONTROL SIGNAL
MC2
BOOM OVER HOIST SIGNAL
BOOM B/S (No. 1) SIGNAL
BOOM B/S (No. 2) SIGNAL
FUNCTION LOCK
ELECTRICITY SIGNAL
INCHING SPEED SELECT SIGNAL
HOOK OVERHOIST SIGNAL 1
HOOK OVERHOIST SIGNAL 2
HOOK OVERHOIST RELEASE SIGNAL
BOOM OVERHOIST RELEASE SIGNAL
Fr. DRUM HOIST STOP SIGNAL
Fr. DRUM LOWER STOP SIGNAL
Re. DRUM HOIST STOP SIGNAL
Re. DRUM LOWER STOP SIGNAL
J1B OVER HOIST SIGNAL
3rd. DRUM HOIST STOP SIGNAL
3rd. DRUM LOWER STOP SIGNAL
BOOM RAISE STOP SIGNAL
BOOM LOWER STOP SIGNAL
LM1 BYPASS(GR) SIGNAL
LM1 BYPASS(UIB) SIGNAL
OPTION
C/W DETECT 1
C/W DETECT 2
C/W DETECT 3
C/W DETECT 4
C/W DETECT 5
C/W DETECT 6
C/W DETECT 7
CB/W DETECT L/S
F-33
F-27
F-28

(8/21)

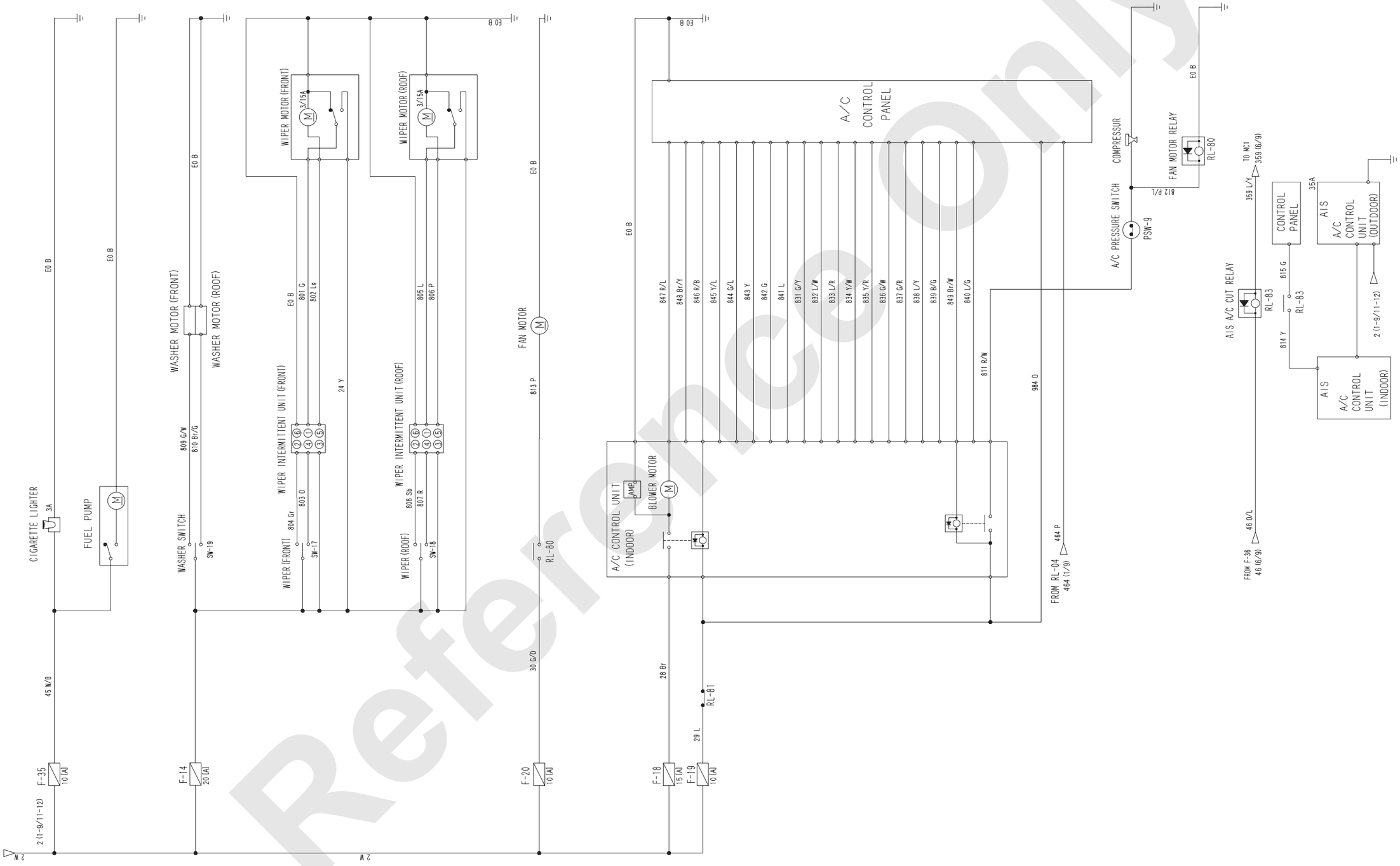
CIGARETTE LIGHTER
3A
FUEL PUMP
WASHER MOTOR (FRONT)
WASHER MOTOR (ROOF)
WASHER SWITCH
SW-19
WIPER MOTOR (FRONT)
WIPER MOTOR (ROOF)
WIPER INTERMITTENT UNIT (FRONT)
WIPER INTERMITTENT UNIT (ROOF)
WIPER (FRONT)
WIPER (ROOF)
SW-17
SW-18
FAN MOTOR
RL-80
A/C CONTROL PANEL
A/C CONTROL UNIT (INDOOR)
BLOWER MOTOR
RL-81
COMPRESSOR
A/C PRESSURE SWITCH
PSW-9
FAN MOTOR RELAY
RL-80
A/C CONTROL PANEL
A/C CONTROL UNIT (OUTDOOR)
A/C CONTROL UNIT (INDOOR)
A/C CUT RELAY
RL-83
RL-83
TO MC1
FROM F-36
FROM RL-04
F-35 10 (A)
F-14 20 (A)
F-20 10 (A)
F-18 15 (A)
F-19 10 (A)
2 (1-9/11-12)
2 (1-9/11-12)
2 W
2 W

(9/21)

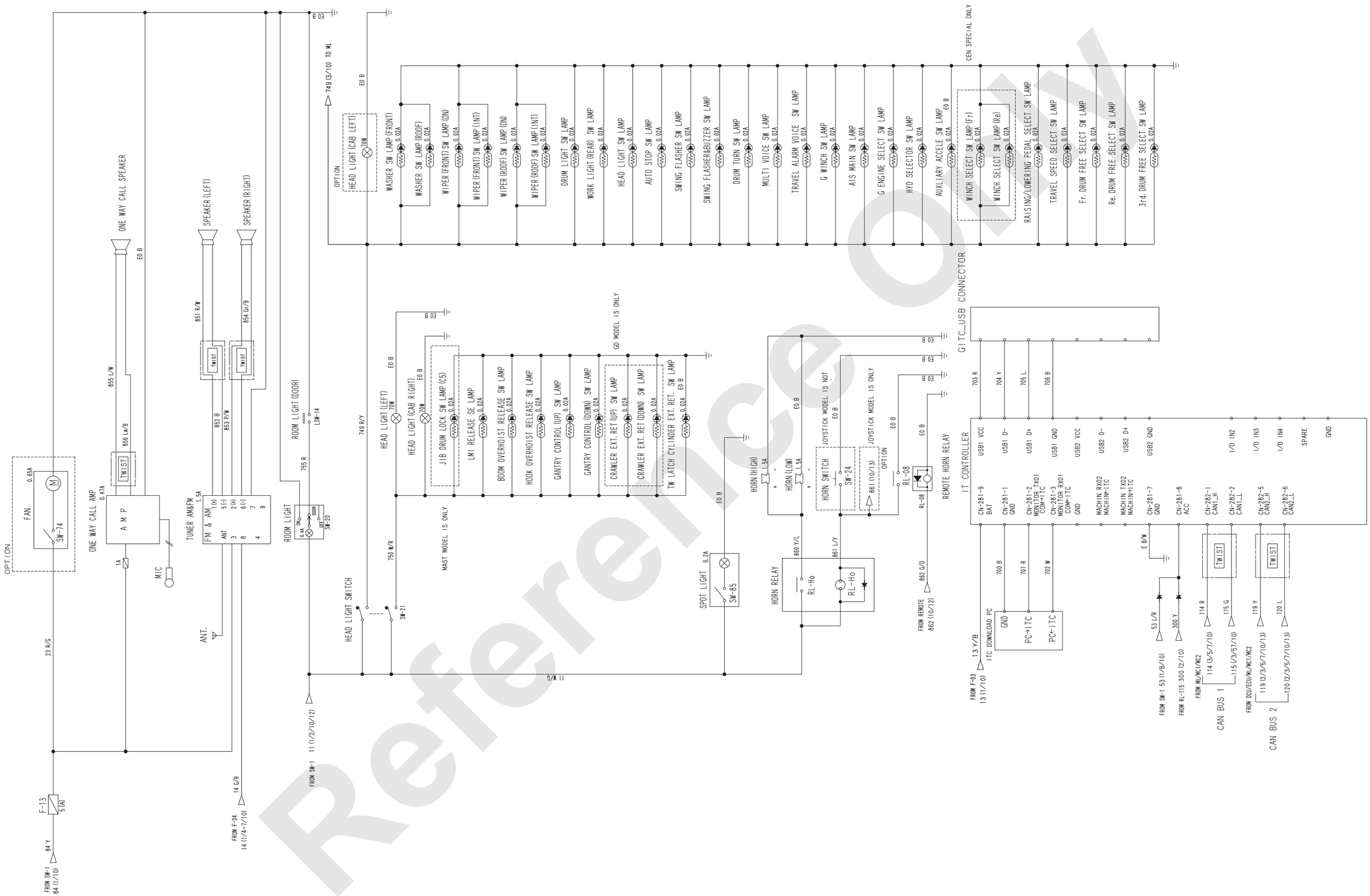

Reference Only

(10/21)

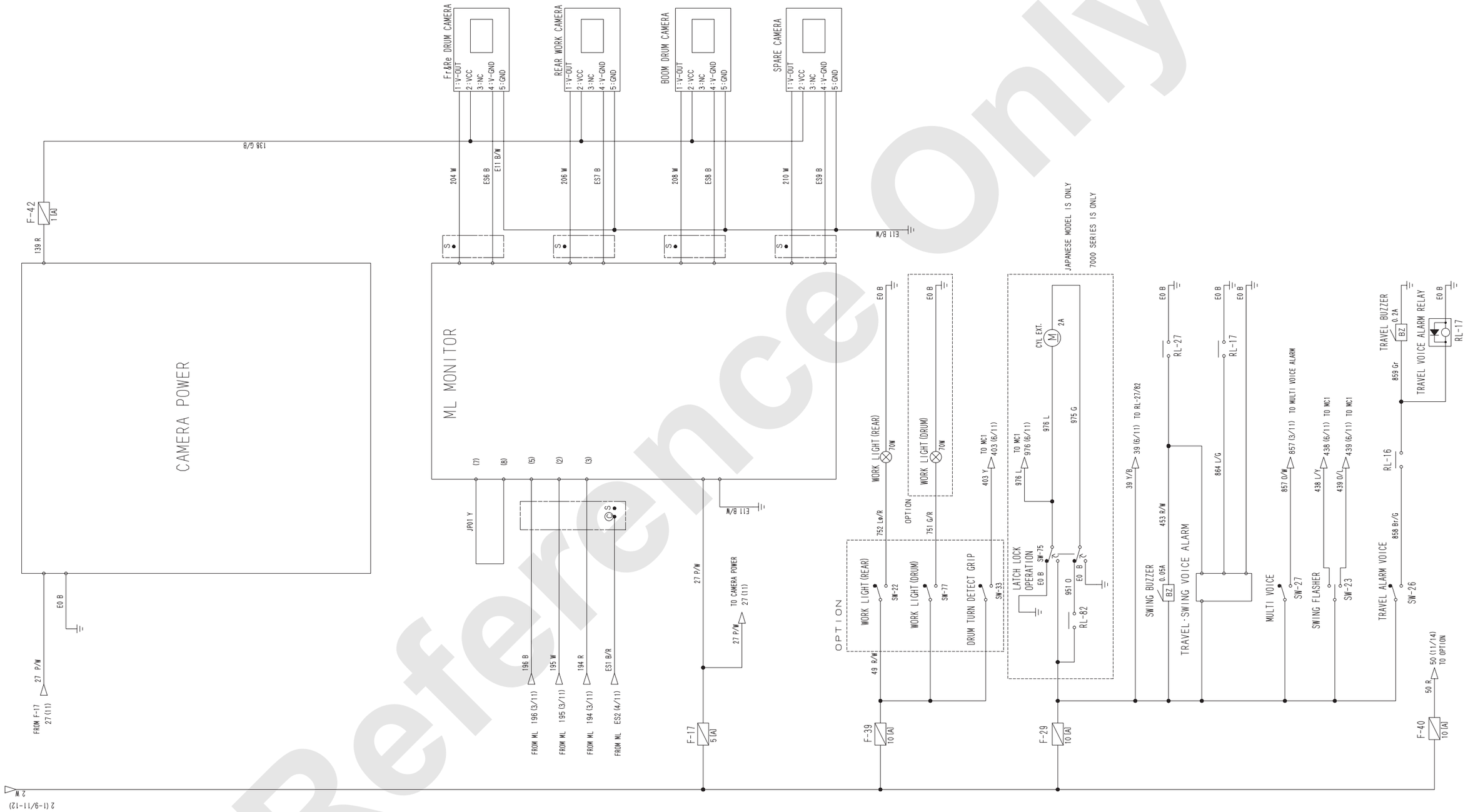

Reference Only

(11/21)

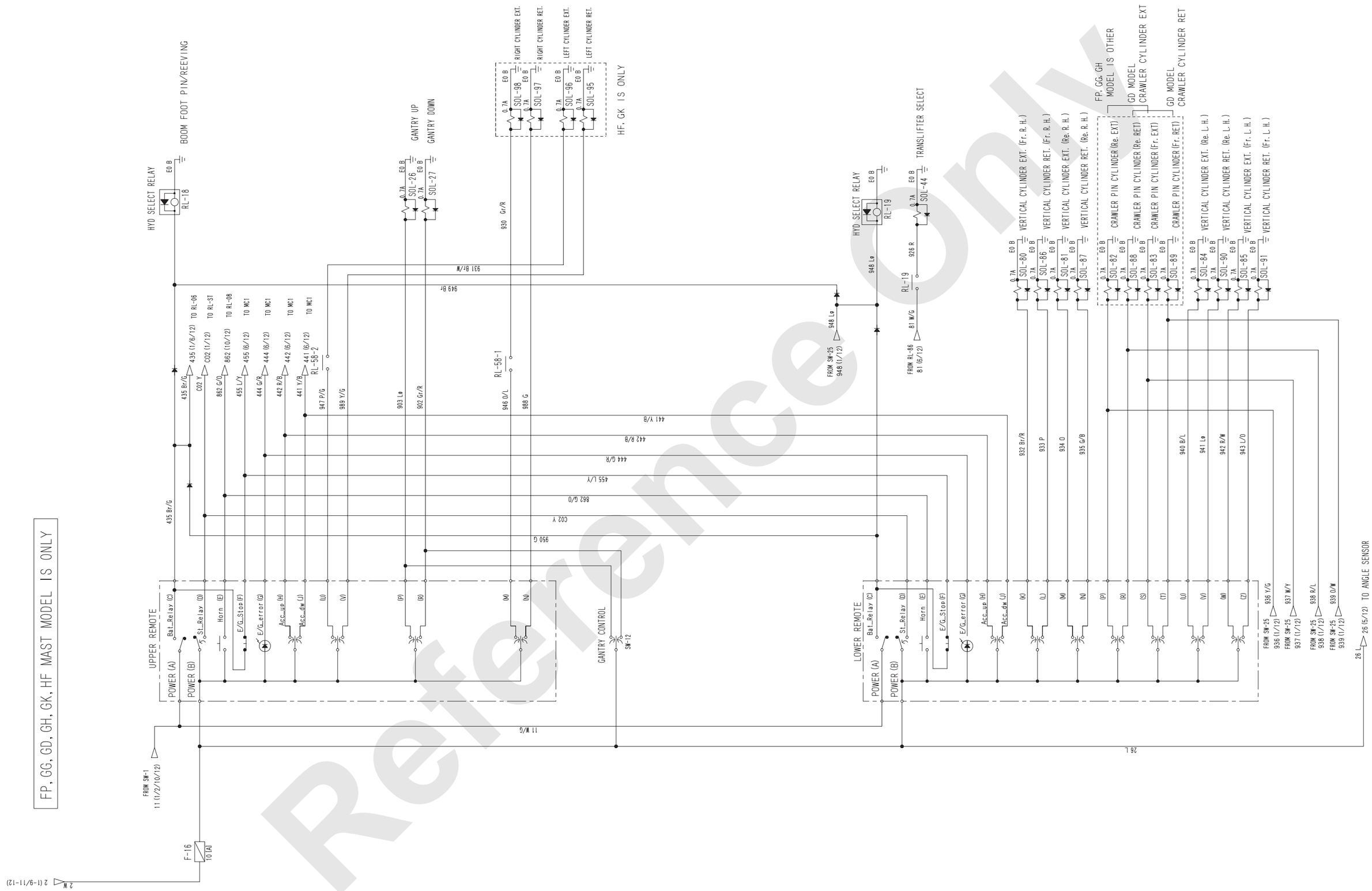

Reference Only

(12/21)

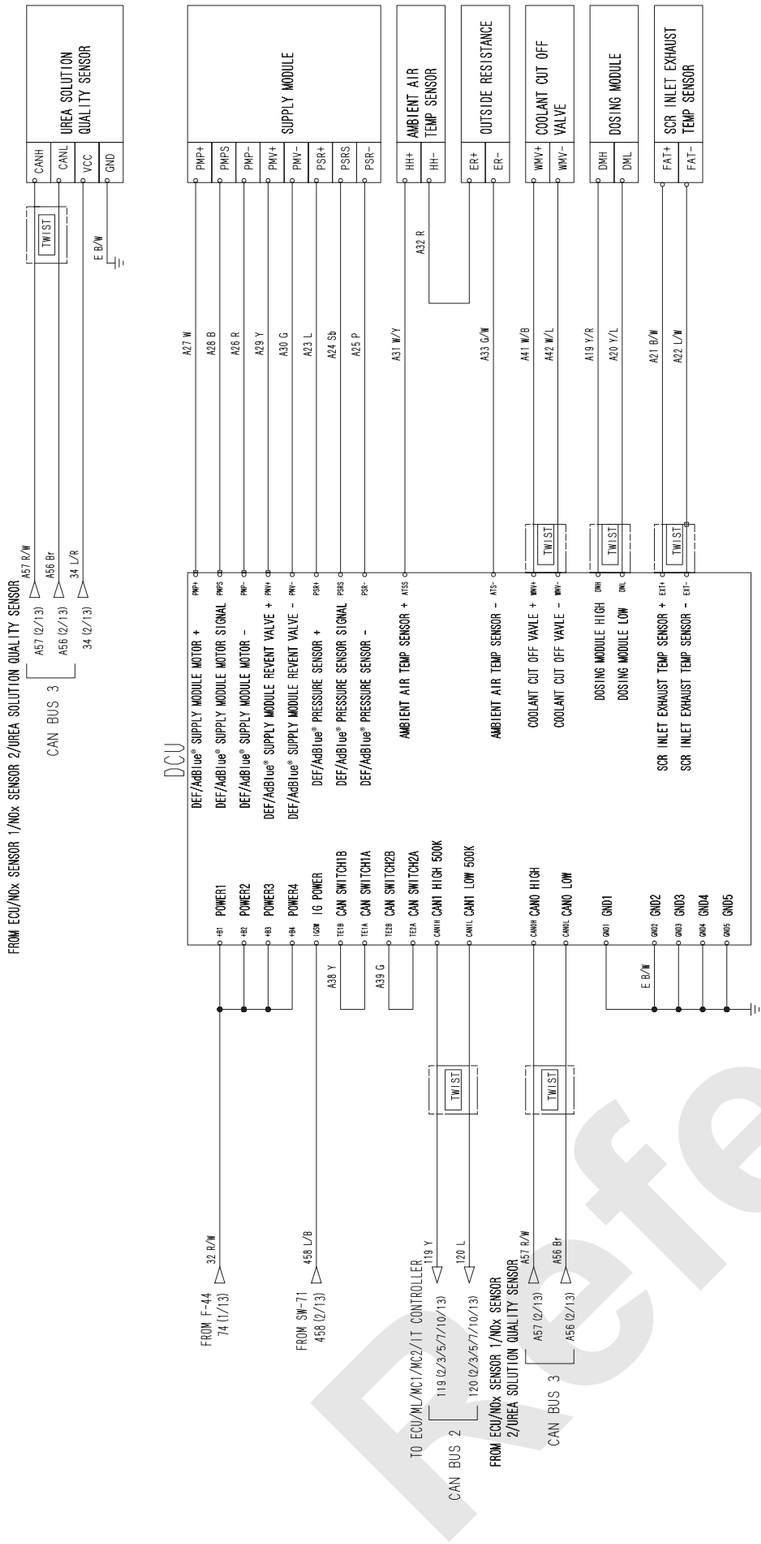

Reference Only

(13/21)

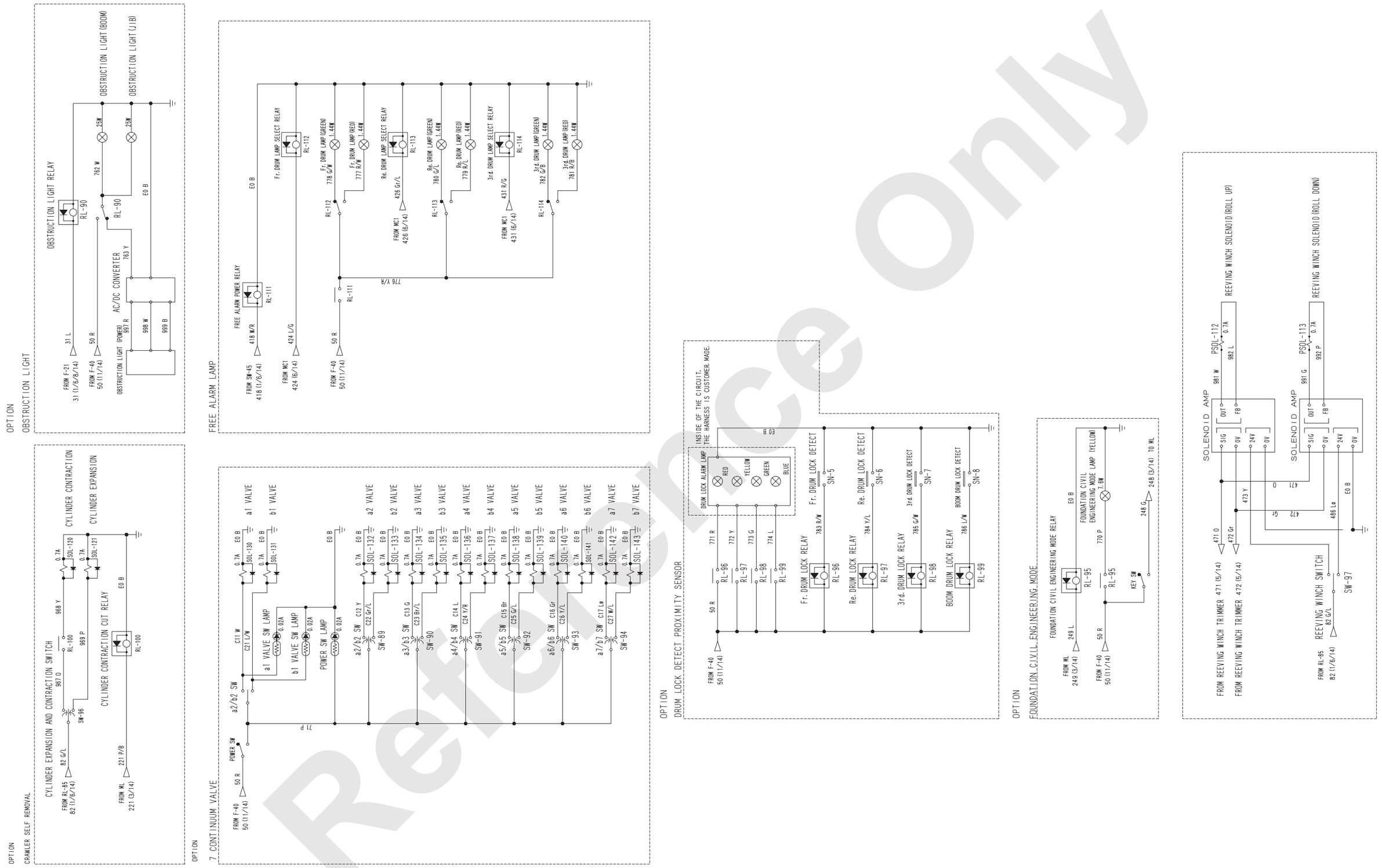

Reference Only

(14/21)

RELAY

RL-NO.	COIL SHEET No.	TERMINAL SHEET No.	TYPE	U S E	Manitowoc PART NO.
RL-B (sub)	1	1	N.O.	BATTERY RELAY (sub)	
RL-B	1	1	N.O.	BATTERY RELAY	
RL-Ho	10	10	N.O.	HORN RELAY	
RL-C	1		N.O.	CUT OUT RELAY	
RL-H	2	2	N.O.	HEATER RELAY	
RL-ST	1	1	N.O.	STARTER RELAY	
RL-01	1	1	N.C.	ALTERNATOR DETECT RELAY	
RL-02	1	1	N.C.	SAFETY RELAY	
RL-03	8	8	N.O.	OIL COOLER MOTOR	
RL-04	1	1	N.C.	AIS RELAY	
RL-05	1	1	N.C.	STATER LOCK RELAY	
RL-06	1	1	N.C.	ATTESTATION RELEASE RELAY	
RL-07	1	1	N.O. N.C.	E/G STOP RELAY	
RL-08	10	10	N.O.	REMOTE HORN RELAY	
RL-09	1	1	N.C.	SWING PARKING CONTROL RELAY	
RL-10	1			SWING PARKING 1 RELAY	
RL-10-1		1	N.O.	SWING PARKING 1	
RL-10-2		1	N.O.	SWING PARKING 2	
RL-12	1	1	N.C.	SWING PARKING 3 RELAY	
RL-13	6	1	N.C.	PILOT PRESSURE CUT	

RELAY

RL-NO.	COIL SHEET No.	TERMINAL SHEET No.	TYPE	U S E	Manitowoc PART NO.
RL-14	6	6	N.C.	SWING HIGH LOW SPEED SELECT	
RL-15	6	6	N.O.	SWING NEUTRAL BRAKE SELECT	
RL-16	1	11	N.O.	TRAVEL ALARM RELAY	
RL-17	11	11	N.O.	TRAVEL VOICE ALARM RELAY	
RL-18	12	1	N.C.	HYD SELECT RELAY	
RL-19	12	12	N.O.	HYD SELECT RELAY	
RL-20	6	6	N.O.	HYD. OIL HEAT	
RL-21	1	1	N.O.	E/G RESTART RELAY	
RL-22	5			MC1 BYPASS RELAY	
RL-22-1		5	N.O. N.C.	MC1 BYPASS RELAY	
RL-22-2		5	N.O. N.C.	MC1 BYPASS RELAY	
RL-22-3		5	N.O. N.C.	MC1 BYPASS RELAY	
RL-22-4		5	N.O. N.C.	MC1 BYPASS RELAY	
RL-22-5		5	N.O. N.C.	MC1 BYPASS RELAY	
RL-22-6		5	N.O. N.C.	MC1 BYPASS RELAY	
RL-22-7		5	N.O. N.C.	MC1 BYPASS RELAY	
RL-22-8		5	N.O. N.C.	MC1 BYPASS RELAY	
RL-22-9		5	N.O. N.C.	MC1 BYPASS RELAY	
RL-22-10		5	N.O. N.C.	MC1 BYPASS RELAY	
RL-23	1	1	N.C.	KEY RETURN RELAY	

RELAY

RL-NO.	COIL SHEET No.	TERMINAL SHEET No.	TYPE	U S E	Manitowoc PART NO.
RL-24	6	3	N.C.	LMI BYPASS RESET	
RL-25	3			LMI BYPASS KEEP 1	
RL-25-1		3	N.O.	LMI BYPASS KEEP 1	
RL-25-2		3	N.O.	LMI BYPASS KEEP 2	
RL-27	6	11	N.O.	SWING BUZZER	
RL-28	3	5	N.C.	SPEED LIMIT RELEASE	
RL-29	3	5	N.O.	SPEED LIMIT	
RL-30	3	3	N.O.	OVERLOAD ALARM LAMP (GREEN)	
RL-31	3	3	N.O.	OVERLOAD ALARM LAMP (YELLOW)	
RL-32	3	3	N.O.	OVERLOAD ALARM LAMP (RED)	
RL-36	6	3	N.O.	LMI ADJUSTMENT MODE SELECT	
RL-37	6	6	N.O.	DPF RECYCLE RELAY	
RL-38	6	6	N.O.	SWING FLASHER (L. H.) RELAY	
RL-39	6	6	N.O.	SWING FLASHER (R. H.) RELAY	
RL-40	6	6	N.O.	Qmax CUT RELAY	
RL-41	6	6	N.O.	CLM RELAY	
RL-42	6	6	N.O.	ESM RELAY	
RL-43	6	6	N.O.	CLA RELAY	
RL-44	6	6	N.O.	ESA RELAY	
RL-45	6	6	N.O.	CLT RELAY	

Reference Only

RELAY

RL-NO.	COIL SHEET No.	TERMINAL SHEET No.	TYPE	U S E	Manitowoc PART NO.
RL-46	6	6	N.O.	EST RELAY	
RL-47	6	6	N.O.	Fr. DRUM FREE SELECT RELAY	
RL-48	6	6	N.O.	Re. DRUM FREE SELECT RELAY	
RL-49	6	6	N.O.	3rd. DRUM FREE SELECT RELAY	
RL-50	4			JIB OVER HOIST RELAY	
RL-50-1		3	N.O.	JIB OVER HOIST RELAY	
RL-50-2		3	N.O.	JIB OVER HOIST RELAY	
RL-51	4	3	N.O.	NO. 2 LIMIT RELAY	
RL-53	4	3	N.O.	BOOM OVER HOIST RELAY	
RL-54	3	4	N.O.	SELF REMOVAL SELECT	
RL-55	3	4	N.O.	ASSEMBLY DISASSEMBLY SELECT	
RL-56	3	4	N.O.	MAST MODEL SELF REMOVAL SELECT	
RL-57	3			JIB MODEL SELECT	
RL-57-1		4	N.O.	JIB MODE	
RL-57-2		4	N.C.	JIB MODE	
RL-58	3			SELF REMOVAL EXT. STOP	
RL-58-1		12	N.O.	SELF REMOVAL EXT. STOP	
RL-58-2		12	N.O.	SELF REMOVAL EXT. STOP	
RL-60	3	7	N.O.	RAISING/LOWERING RAISE STOP	
RL-61	3	7	N.O.	RAISING/LOWERING LOWER STOP	

RELAY

RL-NO.	COIL SHEET No.	TERMINAL SHEET No.	TYPE	U S E	Manitowoc PART NO.
RL-62	3	7	N.O.	Fr. DRUM HOIST STOP	
RL-63	3	7	N.O.	Fr. DRUM LOWER STOP	
RL-64	3	7	N.O.	Re. DRUM HOIST STOP	
RL-65	3	7	N.O.	Re. DRUM LOWER STOP	
RL-66	3	7	N.O.	3rd. DRUM HOIST STOP	
RL-67	3	7	N.O.	3rd. DRUM LOWER STOP	
RL-68	7			MC2 BYPASS RELAY	
RL-68-1		7	N.O. N.C.	MC2 BYPASS RELAY	
RL-68-2		7	N.O. N.C.	MC2 BYPASS RELAY	
RL-68-3		7	N.O. N.C.	MC2 BYPASS RELAY	
RL-68-4		7	N.O. N.C.	MC2 BYPASS RELAY	
RL-68-5		7	N.O. N.C.	MC2 BYPASS RELAY	
RL-68-6		7	N.O. N.C.	MC2 BYPASS RELAY	
RL-68-7		7	N.O. N.C.	MC2 BYPASS RELAY	
RL-68-8		7	N.O. N.C.	MC2 BYPASS RELAY	
RL-68-9		7	N.O. N.C.	MC2 BYPASS RELAY	
RL-68-10		7	N.O. N.C.	MC2 BYPASS RELAY	
RL-68-11		7	N.O. N.C.	MC2 BYPASS RELAY	
RL-68-12		7	N.O. N.C.	MC2 BYPASS RELAY	
RL-68-13		7	N.O. N.C.	MC2 BYPASS RELAY	

RELAY

RL-NO.	COIL SHEET No.	TERMINAL SHEET No.	TYPE	U S E	Manitowoc PART NO.
RL-68-14		7	N.O. N.C.	MC2 BYPASS RELAY	
RL-68-15		7	N.O. N.C.	MC2 BYPASS RELAY	
RL-68-16		7	N.O. N.C.	MC2 BYPASS RELAY	
RL-69	8	8	N.O.	Fr. DRUM INDEPENDENCE JUNCTION SELECT RELAY	
RL-70	8	8	N.O.	Re. DRUM INDEPENDENCE JUNCTION SELECT RELAY	
RL-71	8	8	N.O.	DPR LOAD MULTIPLIED RELAY	
RL-79	1	1	N.O.	INJECTOR COOLING FAN MOTOR RELAY	
RL-80	9	9	N.O.	FAN MOTOR RELAY	
RL-81	1	9	N.C.	A/C CUT RELAY	
RL-82	6	11	N.O.	TW LATCH CYLINDER	
RL-83	9	9	N.O.	AIS A/C CUT RELAY	
RL-84	6	4	N.C.	SOL CUT RELAY 1	
RL-85	6	1	N.C.	SOL CUT RELAY 2	
RL-86	6	6	N.C.	SOL CUT RELAY 3	
RL-87	3	3	N.O.	OVER LOAD ALARM BUZZER	
RL-90	14	14	N.C.	OBSTRUCTION LIGHT RELAY	
RL-91	6	1	N.O.	SUB BATTERY RELAY 2	
RL-93	1	1	N.C.	ACC CUT RELAY 1	
RL-94	6	1	N.O.	ACC CUT RELAY 2	

Reference Only

(16/21)

RELAY

RL-NO.	COIL SHEET No.	TERMINAL SHEET No.	TYPE	U S E	Manitowoc PART NO.
RL-95	14	14	N.O.	FOUNDATION CIVIL ENGINEERING MODE RELAY	
RL-96	14	14	N.O.	Fr. DRUM LOCK RELAY	
RL-97	14	14	N.O.	Re. DRUM LOCK RELAY	
RL-98	14	14	N.O.	3rd. DRUM LOCK RELAY	
RL-99	14	14	N.O.	BOOM DRUM LOCK RELAY	
RL-100	14	14	N.O.	CYLINDER CONTRACTION CUT RELAY	
RL-106	12	12	N.C.	LEFT CYLINDER RET. CUT RELAY	
RL-107	12	12	N.C.	RIGHT CYLINDER EXT. CUT RELAY	
RL-108	12	12	N.C.	LEFT CYLINDER EXT. CUT RELAY	
RL-109	12	12	N.C.	RIGHT CYLINDER RET. CUT RELAY	
RL-110	14	14	N.O.	WIND VELOCITY ALARM LAMP RELAY	
RL-111	13	14	N.O.	FREE ALARM POWER RELAY	
RL-112	14	14	N.C.	Fr. DRUM LAMP SELECT RELAY	
RL-113	14	14	N.C.	Re. DRUM LAMP SELECT RELAY	
RL-114	14	14	N.C.	3rd. DRUM LAMP SELECT RELAY	
RL-115	6	2	N.O.	ENGINE RELAY	
RL-116	6	2	N.O.	OPERATION RECOVERY RELAY	
RL-120	6	1	N.C.	GITC RETURN RELAY	
RL-121	1	1	N.O.	WEBASTO HEATER RELAY	

FUSE

F-NO.	RATED [A]	U S E	SHEET NO.	Manitowoc PART NO.
F-01	20	ELECTRIC POWER SOURCE	1	
F-02	5	POWER SUPPLY-VOLTAGE WATCH	1	
F-03	5	ITC POWER SOURCE	1	
F-04	5	BACK-UP	1	
F-05	10	BYPASS SWITCH	3	
F-06	5	RELEASE SWITCH	3	
F-07	10	LMI CONTROL POWER	4	
F-08	10	LMI OUTPUT POWER	4	
F-09	10	MC1 CONTROL POWER	5	
F-10	20	MC1 OUTPUT POWER	5	
F-11	10	AUTO STOP	3	
F-12	10	ENGINE CONDITION	1	
F-13	5	ONE WAY/RADIO	10	
F-14	20	WIPER	9	
F-15	10	FUNCTION LOCK	1	
F-16	10	REMOTE CONTROL	12	
F-17	5	MONITOR	11	
F-18	15	A/C	9	
F-19	10	A/C 2	9	
F-20	10	FAN MOTOR	9	

FUSE

F-NO.	RATED [A]	U S E	SHEET NO.	Manitowoc PART NO.
F-21	5	GENERATION OF ELECTRICITY SENSOR	1	
F-22	20	DCU POWER SOURCE	2	
F-23	5	ECU POWER SOURCE	1	
F-24	15	ECU (+BF)	2	
F-25	20	ECU (+B)	2	
F-26	15	ECU	2	
F-27	20	OIL COOLER FAN MOTOR 1	8	
F-28	20	OIL COOLER FAN MOTOR 2	8	
F-29	10	SWING FLASHER/VOICE ALARM	11	
F-30	5	STARTER	1	
F-31	10	MC2 CONTROL POWER	7	
F-32	20	MC2 OUTPUT POWER	7	
F-33	5	MC2 EARTH OUTPUT POWER	8	
F-34	5	OVERHOIST L/S	4	
F-35	10	FUEL PUMP/CIGARETTE LIGHTER	9	
F-36	10	MC1 EARTH OUTPUT POWER 1	6	
F-37	10	MC1 EARTH OUTPUT POWER 2	6	
F-38	5	NEUTRAL FREE	6	
F-39	10	LIGHT	11	
F-40	10	SPARE	11	

Reference Only

(17/21)

FUSE

F-NO.	RATED [A]	U S E	SHEET NO.	Manitowoc PART NO.
F-41	20	USER	1	
F-42	1	CAMERA PAWER	11	
F-43	3	WIND VELOCITY ALARM LAMP	14	

SOLENOID VALVE

SOL-NO.	U S E	SHEET NO.	Manitowoc PART NO.
SOL-3	FUNCTION LOCK	1	
SOL-4	TRAVEL SPEED SELECT	1	
SOL-5	SWING PARKING ON FOR RELEASE OFF FOR PARKING	1	
SOL-10	Fr. DRUM C/V	8	
SOL-11	Re. DRUM C/V	8	
SOL-12	3rd. DRUM C/V	8	
SOL-15	Fr. DRUM MOTOR BOOST	8	
SOL-16	Re. DRUM MOTOR BOOST	8	
SOL-17	3rd. DRUM MOTOR BOOST	8	
SOL-18	3rd. RAISE STOP	3	
SOL-19	Fr. DRUM CLUTCH ESM	6	、
SOL-20	Re. DRUM CLUTCH ESA	6	、
SOL-21	3rd. DRUM CLUTCH EST	6	
SOL-22	Fr. DRUM CLUTCH CLM	6	、
SOL-23	Re. DRUM CLUTCH CLA	6	、
SOL-24	3rd. DRUM CLUTCH CLT	6	
SOL-26	GANTRY UP	12	、
SOL-27	GANTRY DOWN	12	、
SOL-35	BOOM RAISE STOP	3	、

SOLENOID VALVE

SOL-NO.	U S E	SHEET NO.	Manitowoc PART NO.
SOL-36	BOOM LOWER STOP	3	
SOL-37	Fr. DRUM HOIST STOP	3	
SOL-38	Re. DRUM HOIST STOP	3	
SOL-42	SWING HIGH LOW SPEED SELECT	6	
SOL-44	TRANSLIFTER SELECT	12	
SOL-45	HYD. SELECT (FOOT PIN/REEVING)	1	
SOL-47	HYD. OIL HEAT	6	
SOL-48	SWING NEUTRAL SELECT	6	
SOL-49	SWING NEUTRAL SELECT	6	
SOL-69	JIB RAISING/LOWERING DRUM LOCK (ON FOR UNLOCK)	1	
SOL-77	RAISING/LOWERING PEDAL	1	
SOL-80	VERTICAL CYLINDER EXT. (Fr. R. H.)	12	
SOL-81	VERTICAL CYLINDER EXT. (Re. R. H.)	12	
SOL-82	CRAWLER PIN CYLINDER (Re. EXT)	12	
SOL-83	CRAWLER PIN CYLINDER (Fr. EXT)	12	
SOL-84	VERTICAL CYLINDER EXT. (Re. L. H.)	12	
SOL-85	VERTICAL CYLINDER EXT. (Fr. L. H.)	12	
SOL-86	VERTICAL CYLINDER RET. (Fr. R. H.)	12	
SOL-87	VERTICAL CYLINDER RET. (Re. R. H.)	12	
SOL-88	CRAWLER PIN CYLINDER (Re. RET)	12	

SOLENOID VALVE

SOL-NO.	U S E	SHEET NO.	Manitowoc PART NO.
SOL-89	CRAWLER PIN CYLINDER (Fr. RET)	12	
SOL-90	VERTICAL CYLINDER RET. (Re. L. H.)	12	
SOL-91	VERTICAL CYLINDER RET. (Fr. L. H.)	12	
SOL-95	LEFT CYLINDER RET.	12	
SOL-96	LEFT CYLINDER EXT.	12	
SOL-97	RIGHT CYLINDER RET.	12	
SOL-98	RIGHT CYLINDER EXT.	12	
SOL-101	Fr. DRUM INDEPENDENCE JUNCTION SELECT	8	
SOL-102	Re. DRUM INDEPENDENCE JUNCTION SELECT	8	
SOL-104	Qmax CUT	6	
SOL-105	CRAWLER EXT. RET. (LEFT/RIGHT)	1	
SOL-106	CRAWLER EXT. RET. (LEFT/RIGHT)	1	
SOL-111	DPF RECYCLE	8	
SOL-120	CYLINDER CONTRACTION	14	
SOL-121	CYLINDER EXPANSION	14	
SOL-130	a1 VALVE	14	
SOL-131	b1 VALVE	14	
SOL-132	a2 VALVE	14	
SOL-133	b2 VALVE	14	
SOL-134	a3 VALVE	14	

Reference Only

(18/21)

SOLENOID VALVE			
SOL-NO.	U S E	SHEET NO.	Manitowoc PART NO.
SOL-135	b3 VALVE	14	
SOL-136	a4 VALVE	14	
SOL-137	b4 VALVE	14	
SOL-138	a5 VALVE	14	
SOL-139	b5 VALVE	14	
SOL-140	a6 VALVE	14	
SOL-141	b6 VALVE	14	
SOL-142	a7 VALVE	14	
SOL-143	b7 VALVE	14	

SOLENOID VALVE			
PSOL-NO.	U S E	SHEET NO.	Manitowoc PART NO.
PSOL-1	MAIN PUMP 1	5	
PSOL-2	BOOM PUMP	5	
PSOL-6	MAIN PUMP 2	5	
PSOL-40	Fr. DRUM TURN GRIP	6	
PSOL-41	Re. DRUM TURN GRIP	6	
PSOL-43	3rd. DRUM TURN GRIP	6	
PSOL-46	BOOM DRUM TURN GRIP	6	
PSOL-50	MAIN PUMP POWER REDUCTION	5	
PSOL-51	SWING REACTION	5	
PSOL-52	BOOM RAISE CONTROL	7	
PSOL-53	BOOM LOWER CONTROL	7	
PSOL-54	Fr. DRUM HOIST CONTROL	7	
PSOL-55	Fr. DRUM LOWER CONTROL	7	
PSOL-56	Re. DRUM HOIST CONTROL	7	
PSOL-57	Re. DRUM LOWER CONTROL	7	
PSOL-58	3rd. DRUM HOIST CONTROL	7	
PSOL-59	3rd. DRUM LOWER CONTROL	7	
PSOL-62	TAGLINE	5	
PSOL-65	Fr. DRUM CONTROL PROPORTIONAL VALVE	7	
PSOL-66	Re. DRUM CONTROL PROPORTIONAL VALVE	7	

SOLENOID VALVE			
PSOL-NO.	U S E	SHEET NO.	Manitowoc PART NO.
PSOL-67	3rd. DRUM CONTROL PROPORTIONAL VALVE	7	
PSOL-70	BOOM PUMP POWER REDUCTION	5	
PSOL-72	SWING CONSTANT SPEED	5	
PSOL-103	Fr. Re. MOTOR CHP CONTROL SYSTEM	7	
PSOL-107	Fr. DRUM MIDDLE DITENT	5	
PSOL-108	Re. DRUM MIDDLE DITENT	5	
PSOL-109	R.H. SWING STOP	5	
PSOL-110	L.H. SWING STOP	5	
PSOL-112	REEVING WINCH SOLENOID (ROLL UP)	14	
PSOL-113	REEVING WINCH SOLENOID (ROLL DOWN)	14	

SWITCH			
SW-NO.	U S E	SHEET NO.	Manitowoc PART NO.
SW-1	E/G KEY	1	
SW-8	TRAVEL SPEED SELECT	1	
SW-9	INCHING SPEED SELECT	1	
SW-11	SWING PARKING	1	
SW-12	GANTRY CONTROL	12	
SW-13	HOOK OVERHOIST RELEASE	3	
SW-14	BOOM OVERHOIST RELEASE	3	
SW-15	LMI RELEASE	3	
SW-16	MASTER KEY	3	
SW-17	WIPER (FRONT)	9	
SW-18	WIPER (ROOF)	9	
SW-19	WASHER SWITCH	9	
SW-20	ROOM LIGHT	10	
SW-21	HEAD LIGHT SWITCH	10	
SW-22	WORK LIGHT (REAR)	11	
SW-23	SWING FLASHER	11	
SW-24	HORN SWITCH	10	
SW-25	CRAWLER EXPANSION AND CONTRACTION	1	
SW-26	TRAVEL ALARM VOICE	11	
SW-27	MULTI VOICE	11	

Reference Only

(19/21)

SWITCH			
SW-NO.	U S E	SHEET NO.	Manitowoc PART NO.
SW-33	DRUM TURN DETECT GRIP	11	
SW-35	AUTO STOP CHECK	3	
SW-36	POSTURE SELECT	3	
SW-37	LMI BYPASS MAIN	3	
SW-38	MC1 BYPASS	5	
SW-39	MC2 BYPASS	7	
SW-45	FREE FALL PERMIT	1	
SW-50	SMULTANEOUS CONTROL POSSIBLE	3	
SW-51	DRUM SELECT	3	
SW-53	Fr. DRUM FREE FALL SELECT	6	
SW-54	Re. DRUM FREE FALL SELECT	6	
SW-55	3rd. DRUM FREE FALL SELECT	6	
SW-56	Fr. DRUM FREE FALL SPEED	6	
SW-57	Re. DRUM FREE FALL SPEED	6	
SW-58	3rd. DRUM FREE FALL SPEED	6	
SW-64	RAISING/LOWERING PEDAL SELECT	1	
SW-65	HYDRAULIC SELECT	1	
SW-71	E/G EMERGENCY STOP SWITCH	2	
SW-72	AUXILIARY ACCELE SW	2	
SW-74	FAN	10	

SWITCH			
SW-NO.	U S E	SHEET NO.	Manitowoc PART NO.
SW-75	LATCH LOCK OPERATION	11	
SW-77	WORK LIGHT (DRUM)	11	
SW-79	JIB RAISING/LOWERING DRUM LOCK	1	
SW-81	AIS MODE SELECT	6	
SW-82	Re. DRUM G WINCH	1	
SW-83	G ENGINE	6	
SW-84	Fr. DRUM G WINCH	1	
SW-85	SPOT LIGHT	10	
SW-86	G WINCH MODE SELECT	6	
SW-87	POWER SW	14	
SW-88	a2/b2 SW	14	
SW-89	a2/b2 SW	14	
SW-90	a3/b3 SW	14	
SW-91	a4/b4 SW	14	
SW-92	a5/b5 SW	14	
SW-93	a6/b6 SW	14	
SW-94	a7/b7 SW	14	
SW-95	KEY SW	14	
SW-96	CYLINDER EXPANSION AND CONTRACTION SWITCH	14	
SW-97	REEVING WINCH SWITCH	14	

LIMIT SWITCH			
LSW-NO.	U S E	SHEET NO.	Manitowoc PART NO.
LSW-1	FUNCTION LOCK	1	
LSW-2	HOOK OVERHOIST 1	4	
LSW-3	HOOK OVERHOIST 2	4	
LSW-4	HOOK OVERHOIST (AUX)	4	
LSW-5	JIB OVER HOIST	4	
LSW-6	HOOK OVERHOIST (JIB)	4	
LSW-7	BOOM OVER HOIST	4	
LSW-8	MAST HOOK OVERHOIST 1	4	
LSW-9	BOOM OVERHOIST (No. 1)	4	
LSW-10	MAST HOOK OVERHOIST 2	4	
LSW-12	BOOM OVERHOIST (No. 2)	4	
LSW-14	ROOM LIGHT (DOOR)	10	
LSW-15	ENG. OIL FILTER ALARM	6	
LSW-20	BRAKE COOLING OIL TEMP. (Fr. DRUM)	6	
LSW-21	BRAKE COOLING OIL TEMP. (Re. DRUM)	6	
LSW-22	LINE FILTER ALARM	6	
LSW-24	MAST CYLINDER	4	
LSW-26	Fr. DRUM OVER PAY OUT	4	
LSW-27	Re. DRUM OVER PAY OUT	4	
LSW-28	3Th. DRUM OVER PAY OUT	4	

LIMIT SWITCH			
LSW-NO.	U S E	SHEET NO.	Manitowoc PART NO.
LSW-30	HYD. OIL TEMP.	1	
LSW-35	AIR CLEANER ALARM	6	
LSW-38	TOWER JIB BENDS LOSS	4	
LSW-39	TOWER LATCH RELATIONS LIMIT SWITCH	4	
LSW-40	TOWER LATCH THE EDGE LIMIT SWITCH	4	
LSW-41	GANTRY STAND UP DETECT	4	

Reference Only

(20/21)

PRESSURE SWITCH

PSW-NO.	TYPE	U S E	SHEET NO.	Manitowoc PART NO.
PSW-1	N.C.	Fr. DRUM FOOT BRAKE PRESSURE SW	6	
PSW-2	N.C.	Re. DRUM FOOT BRAKE PRESSURE SW	6	
PSW-3	N.C.	3rd. DRUM FOOT BRAKE PRESSURE SW	6	
PSW-7	N.O.	TRAVEL CONTROL DETECT SW. (R. H.)	1	
PSW-8	N.C.	ENGINE OIL PRESSURE SW	2	
PSW-9	N.O.	A/C PRESSURE SWITCH	9	
PSW-10	N.O.	TRAVEL CONTROL DETECT SW. (L. H.)	1	

PRESSURE SENSOR

PT-NO.	U S E	SHEET NO.	Manitowoc PART NO.
PT-1	SWING PUMP PRESSURE	5	
PT-3	Fr. DRUM HOISTING PRESSURE SENSOR	7	
PT-4	Fr. DRUM LOWERING PRESSURE SENSOR	7	
PT-5	Re. DRUM HOISTING PRESSURE SENSOR	7	
PT-6	Re. DRUM LOWERING PRESSURE SENSOR	7	
PT-7	3rd. DRUM HOISTING PRESSURE SENSOR	7	
PT-8	3rd. DRUM LOWERING PRESSURE SENSOR	7	
PT-9	Fr. DRUM CLUTCH PRESSURE	5	
PT-10	Re. DRUM CLUTCH PRESSURE	5	
PT-11	3rd. DRUM CLUTCH PRESSURE	5	
PT-12	BOOM RAISEING PRESSURE SENSOR	7	
PT-13	BOOM LOWERING PRESSURE SENSOR	7	
PT-14	Re. DRUM CONTROL PROPORTIONAL PRESSURE SENSOR	7	
PT-15	3rd. DRUM CONTROL PROPORTIONAL PRESSURE SENSOR	7	
PT-16	CONTROL PRIMARY PRESSURE	5	
PT-17	Fr. DRUM INDEPENDENCE JUNCTION SELECT PRESSURE SENSOR	7	
PT-18	Re. DRUM INDEPENDENCE JUNCTION SELECT PRESSURE SENSOR	7	
PT-19	MAIN AUX. CHP START PRESSURE SENSOR	7	

PRESSURE SENSOR

PT-NO.	U S E	SHEET NO.	Manitowoc PART NO.
PT-20	Fr. DRUM CONTROL PROPORTIONAL PRESSURE SENSOR	7	
PT-21	Qmax CUT FB	5	
PT-22	SWING CONTROL (R. H.)	5	
PT-23	SWING CONTROL (L. H.)	5	
PT-24	POWER SHIFT PRESSUER	5	
PT-25	BOOM DRUM POWER SHIFT PRESSURE SENSOR	5	

PILOT LAMP

PL-NO.	U S E	SHEET NO.	Manitowoc PART NO.
PL-7	CHECK ENG. LAMP (RED)	2	

Reference Only

(21/21)

10.1.2 CONNECTOR LAYOUT

Wire color list

- Basic single color

Color sign	Color name
B	Black
W	White
R	Red
G	Green
Y	Yellow
Br	Brown
L	bLue

Color sign	Color name
Lg	Light green
Gr	Gray
O	Orange
Sb	Skyblue
P	Pink
V	Violet
Free	Free

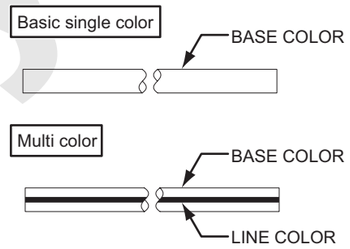

- Multi color

Color sign	Color name	Line color
B/W	Black	White
B/R	Black	Red
B/G	Black	Green
B/Y	Black	Yellow
B/L	Black	bLue
W/B	White	Black
W/R	White	Red
W/G	White	Green
W/Y	White	Yellow
W/L	White	bLue
W/O	White	Orange
R/B	Red	Black
R/W	Red	White
R/G	Red	Green
R/Y	Red	Yellow
R/L	Red	bLue
G/B	Green	Black
G/W	Green	White
G/R	Green	Red
G/Y	Green	Yellow
G/L	Green	bLue

Color sign	Color name	Line color
G/O	Green	Orange
Y/B	Yellow	Black
Y/W	Yellow	White
Y/R	Yellow	Red
Y/G	Yellow	Green
Y/L	Yellow	bLue
Y/V	Yellow	Violet
Br/B	Brown	Black
Br/W	Brown	White
Br/R	Brown	Red
Br/G	Brown	Green
Br/Y	Brown	Yellow
Br/L	Brown	bLue
L/B	bLue	Black
L/W	bLue	White
L/R	bLue	Red
L/G	bLue	Green
L/Y	bLue	Yellow
L/O	bLue	Orange
Lg/B	Light green	Black
Lg/W	Light green	White

Color sign	Color name	Line color
Lg/R	Light green	Red
Lg/Y	Light green	Yellow
Lg/L	Light green	bLue
Gr/B	Gray	Black
Gr/W	Gray	White
Gr/R	Gray	Red
Gr/L	Gray	bLue
O/B	Orange	Black
O/Y	Orange	Yellow
O/L	Orange	bLue
O/W	Orange	White
Sb/B	Skyblue	Black
Sb/R	Skyblue	Red
Sb/L	Skyblue	bLue
P/B	Pink	Black
P/W	Pink	White
P/R	Pink	Red
P/G	Pink	Green
P/L	Pink	bLue
V/R	Violet	Red

Reference only

Harness name	Parts No.		Page
1. FLOOR PLATE			P.10-25
FLOOR PLATE HARNESS (a)			P.10-25
FLOOR PLATE HARNESS (b)			P.10-25
2. LOWER			P.10-25
LOWER HARNESS			P.10-25
3. UPPER			P.10-25
UPPER HARNESS			P.10-25
4. LEFT DECK			P.10-25
MAIN HARNESS			P.10-25
RELAY HARNESS			P.10-25
5. RIGHT DECK			P.10-25
RIGHT DECK HARNESS (a)			P.10-25
RIGHT DECK HARNESS (b)			P.10-25
POWER SUPPLY HARNESS			P.10-25
STARTER (TERMINAL B) TO BATTERY RELAY			P.10-25
STARTER (TERMINAL C) TO SAFETY RELAY			P.10-25
6. RIGHT DECK (GUARD)			P.10-25
GUARD HARNESS (a)			P.10-25
GUARD HARNESS (b)			P.10-25
GUARD HARNESS (c)			P.10-25
NOx SENSOR HARNESS			P.10-25
7. CAB			P.10-25
CAB MAIN HARNESS			P.10-25
8. SWING FRAME	GG		P.10-25
	GH		
SWING FRAME HARNESS			P.10-25
JUNCTION BOX			P.10-25
ATT. JUNCTION HARNESS			P.10-25
9. ENGINE			P.10-25
STARTER MOTOR TO ENGINE GROUND			P.10-25
STARTER MOTOR TERMINAL B ALTERNATOR B TERMINAL			P.10-25
10. MONITOR			P.10-25
MONITOR HARNESS			P.10-25
11. COUNTERWEIGHT SELF REMOVAL			P.10-25
COUNTERWEIGHT SELF REMOVAL HARNESS			P.10-25

Harness name	Parts No.	Page
12. COUNTERWEIGHT DETECTOR / 3-C/W / OPT.		P.10-25
COUNTERWEIGHT DETECTOR HARNESS (a)		P.10-25
COUNTERWEIGHT DETECTOR HARNESS (b)		P.10-25
COUNTERWEIGHT DETECTOR HARNESS (c)		P.10-25
13. COUNTERWEIGHT DETECTOR / 4-C/W / OPT.		P.10-25
COUNTERWEIGHT DETECTOR HARNESS (a)		P.10-25
COUNTERWEIGHT DETECTOR HARNESS (b)		P.10-25
COUNTERWEIGHT DETECTOR HARNESS (c)		P.10-25
COUNTERWEIGHT DETECTOR HARNESS (d)		P.10-25
14. CARBODY WEIGHT DETECTOR / OPT.		P.10-25
CARBODY WEIGHT DETECTOR HARNESS (a)		P.10-25
CARBODY WEIGHT DETECTOR HARNESS (b)		P.10-25
CARBODY WEIGHT DETECTOR HARNESS (c)		P.10-25
15. BOOM OVER HOIST PREVENTING		P.10-25
BOOM OVER HOIST PREVENTING HARNESS (a)		P.10-25
BOOM OVER HOIST PREVENTING HARNESS (b)		P.10-25
BOOM OVER HOIST PREVENTING HARNESS (c)		P.10-25
BOOM OVER HOIST PREVENTING HARNESS (d)		P.10-25
16. JIB OVER HOIST PREVENTING		P.10-25
JIB OVER HOIST PREVENTING HARNESS (a)		P.10-25
JIB OVER HOIST PREVENTING HARNESS (b)		P.10-25
17. TRANSLIFTER		P.10-25
TRANSLIFTER HARNESS		P.10-25
18. HOIST DRUM TURN SENSOR		P.10-25
HOIST DRUM TURN SENSOR HARNESS		P.10-25
19. THIRD DRUM TURN SENSOR		P.10-25
THIRD DRUM TURN SENSOR HARNESS		P.10-25
20. DEF/AdBlue® TANK		P.10-25
DEF/AdBlue® TANK		P.10-25
21. CAMERA CONTROLLER		P.10-25
CAMERA CONTROLLER HARNESS (a)		P.10-25
CAMERA CONTROLLER HARNESS (b)		P.10-25
22. DRUM LIGHT INSTAL		P.10-25
DRUM LIGHT INSTAL HARNESS		P.10-25
23. BACK LIGHT INSTAL		P.10-25
BACK LIGHT INSTAL HARNESS		P.10-25
24. IT CONTROLLER INSTALLATION		P.10-25

Reference Only

1. FLOOR PLATE

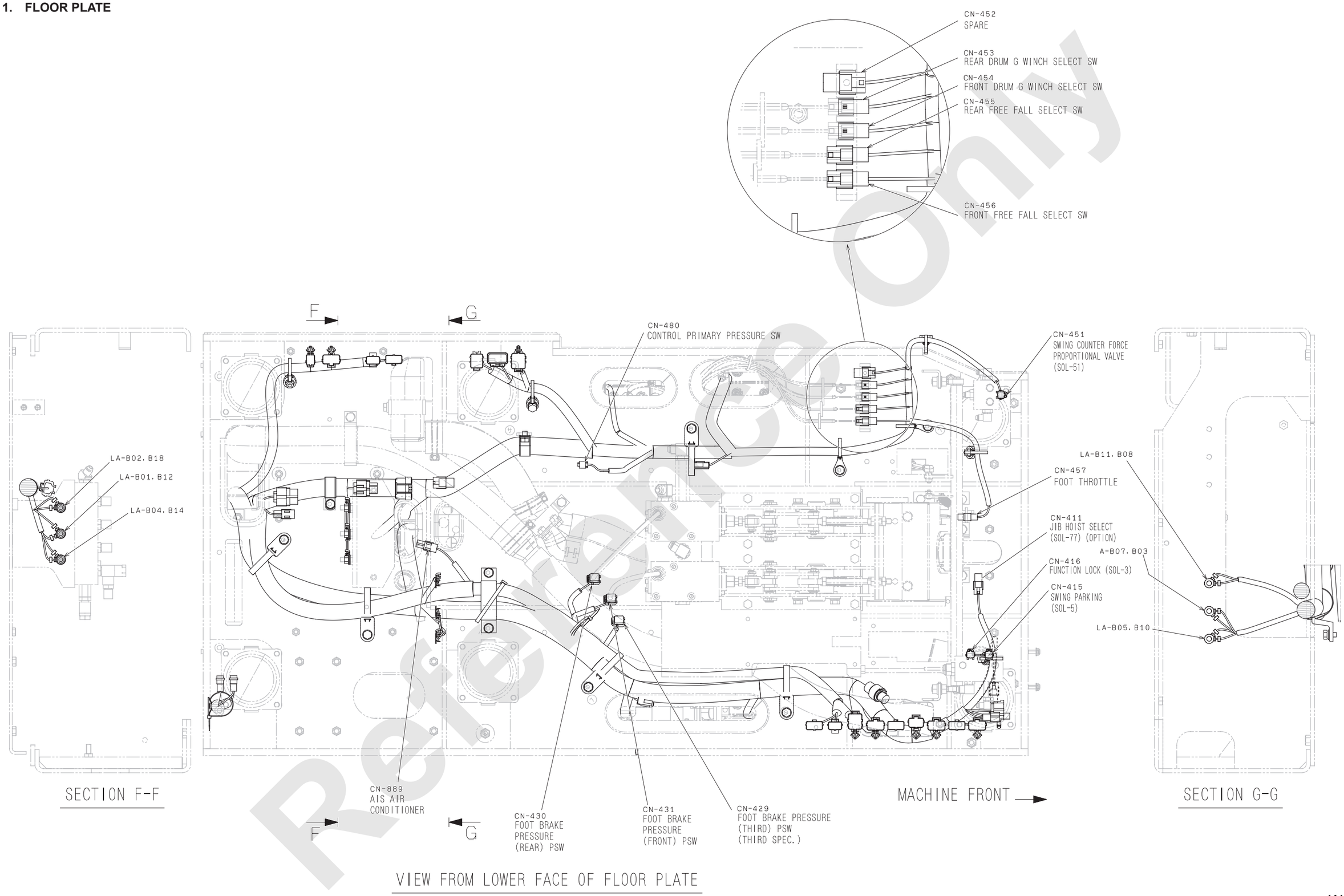

Reference Only

(1/4)

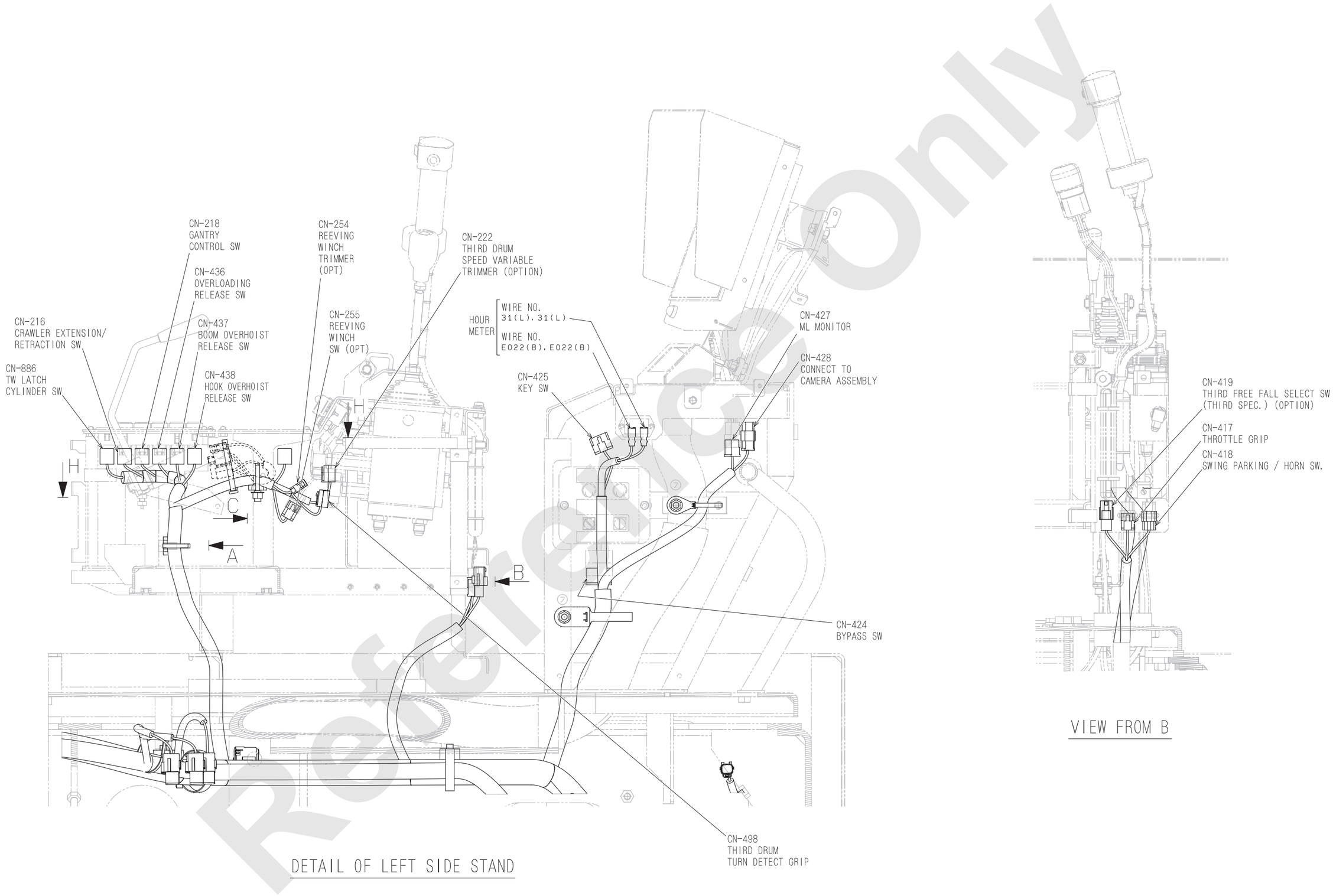

Reference Only

(2/4)

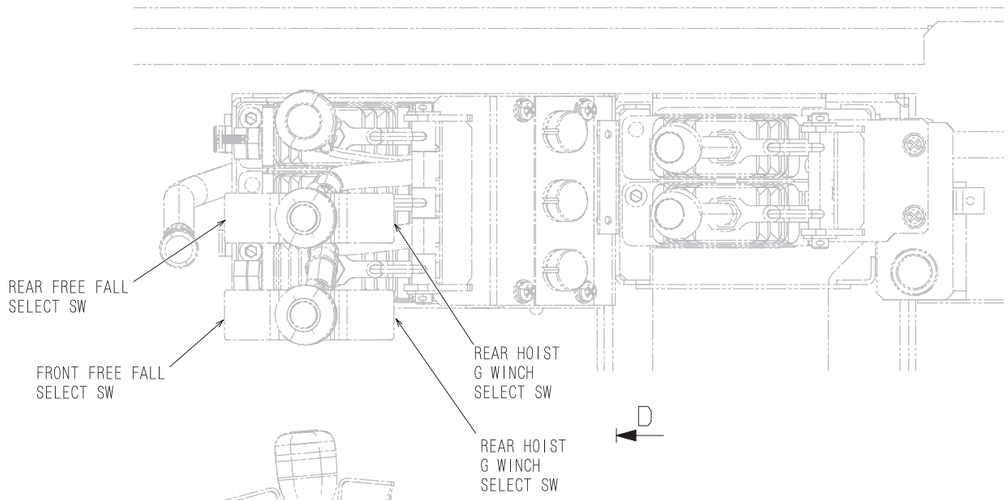

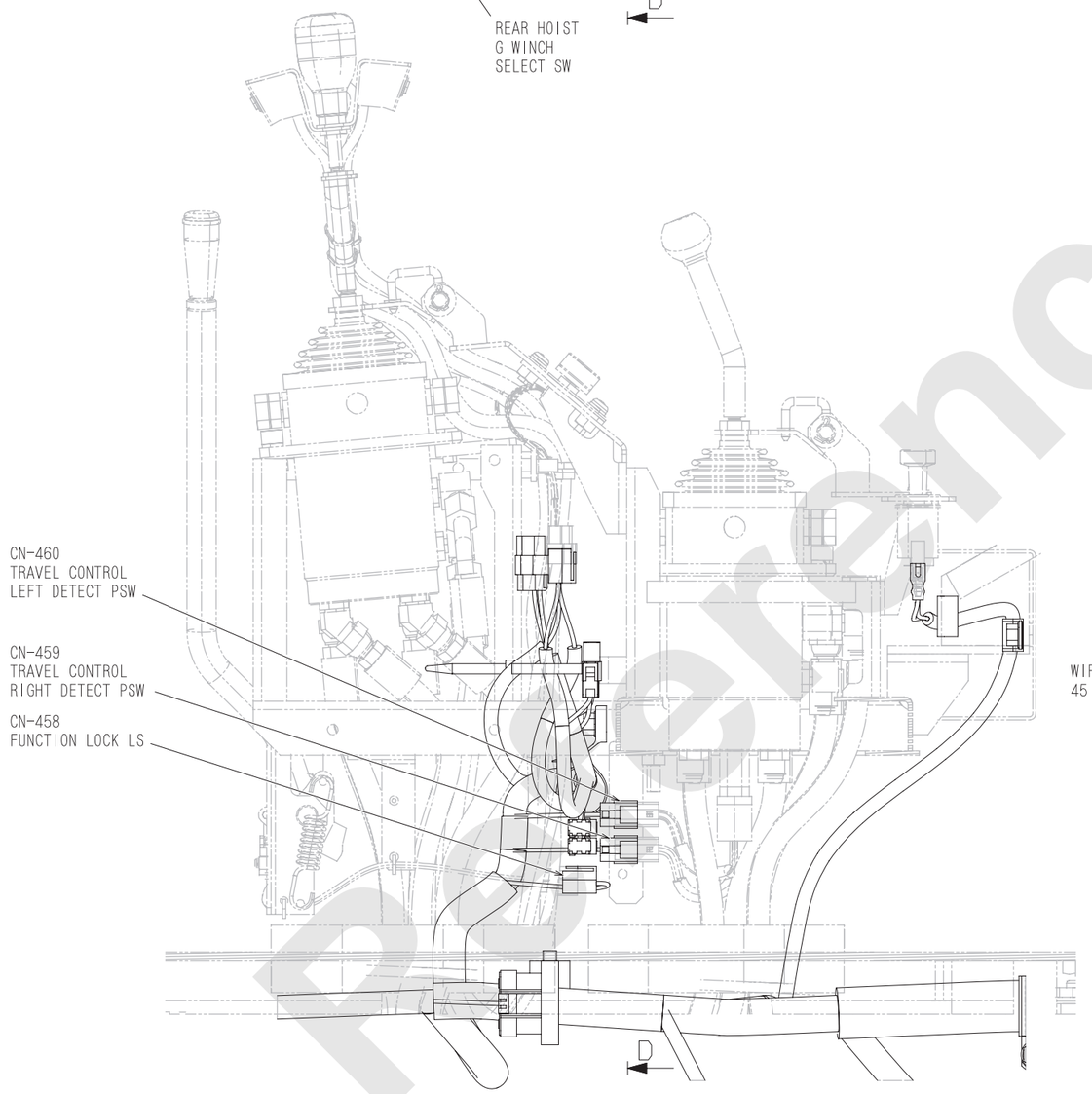

DETAIL OF RIGHT SIDE STAND

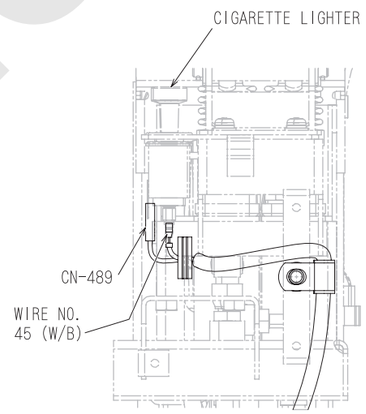

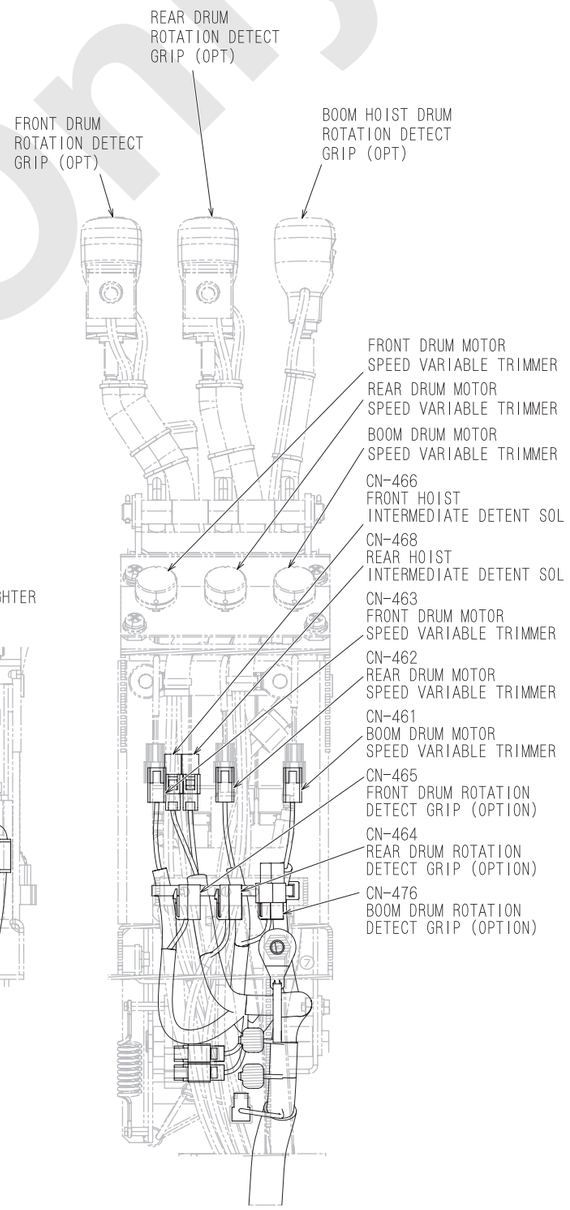

SECTION D-D

Reference Only

(3/4)

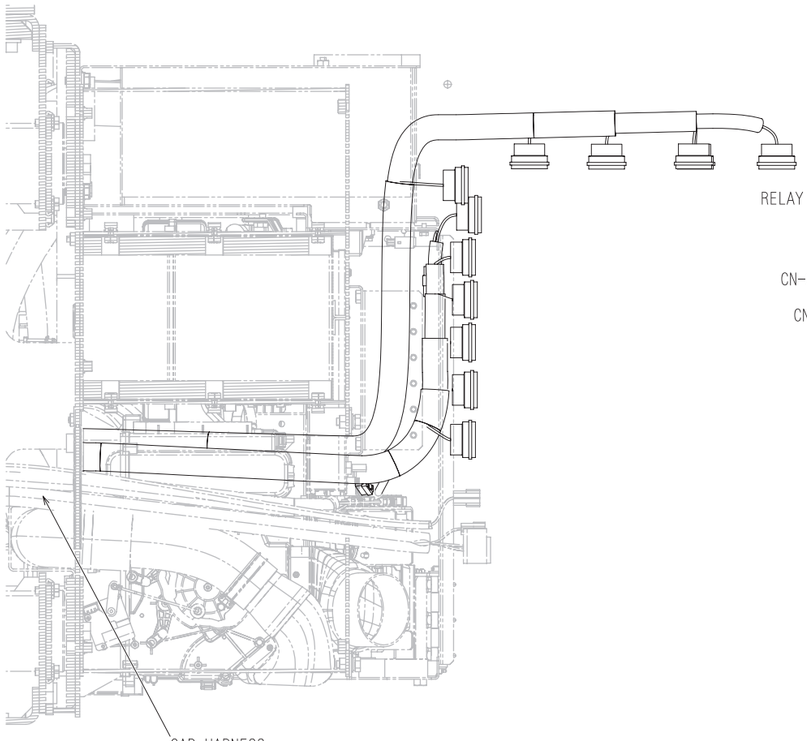

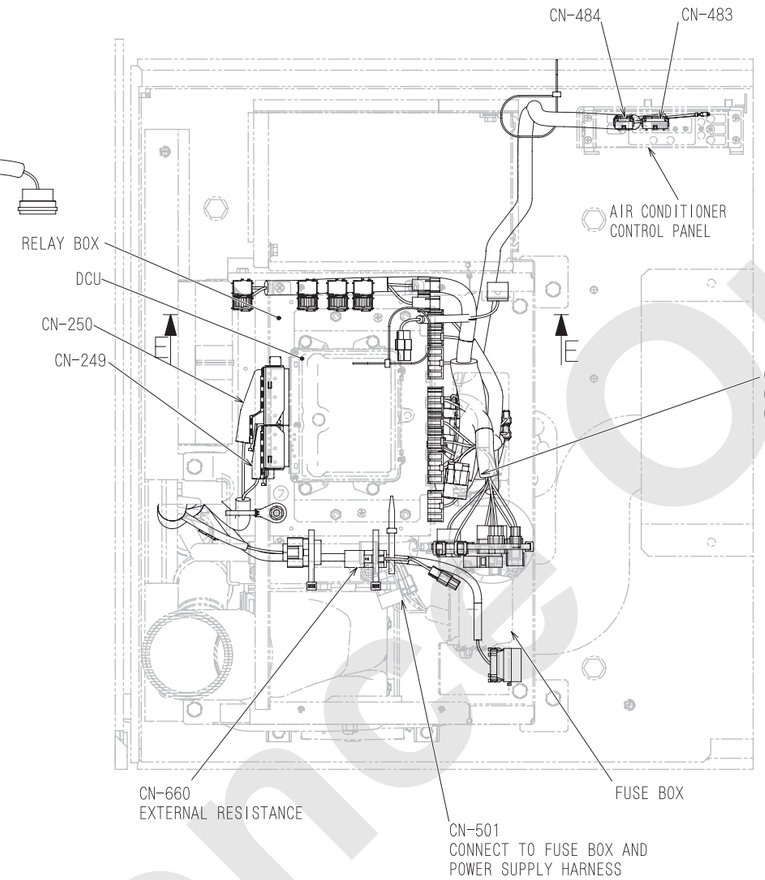

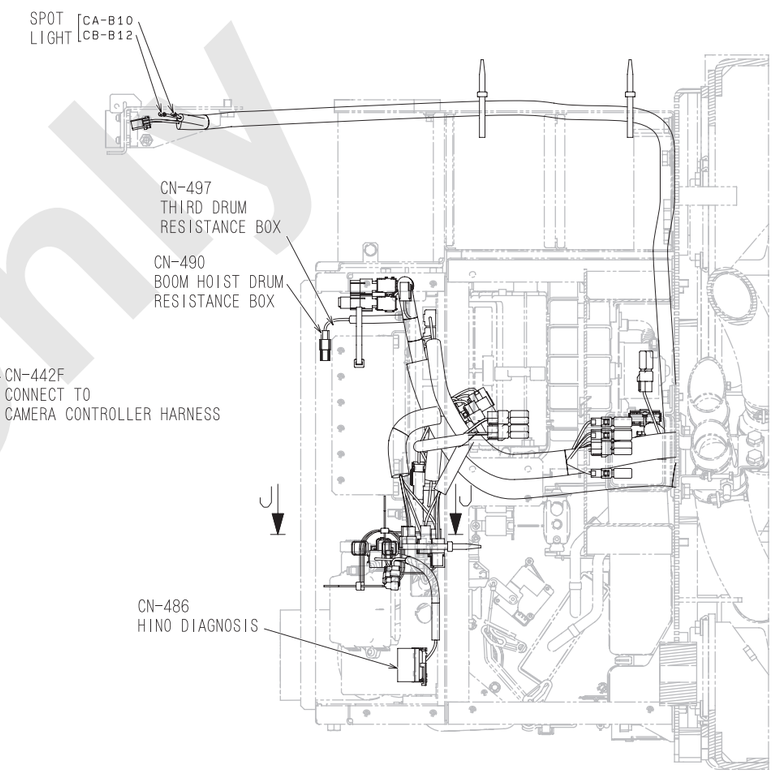

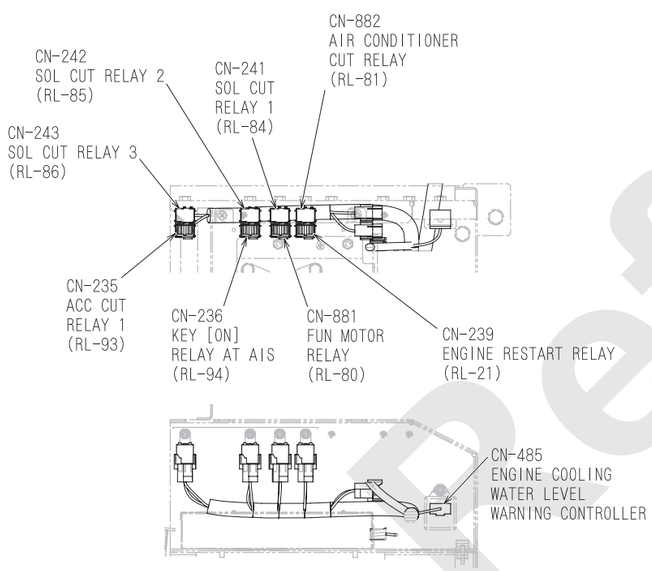

SECTION E-E

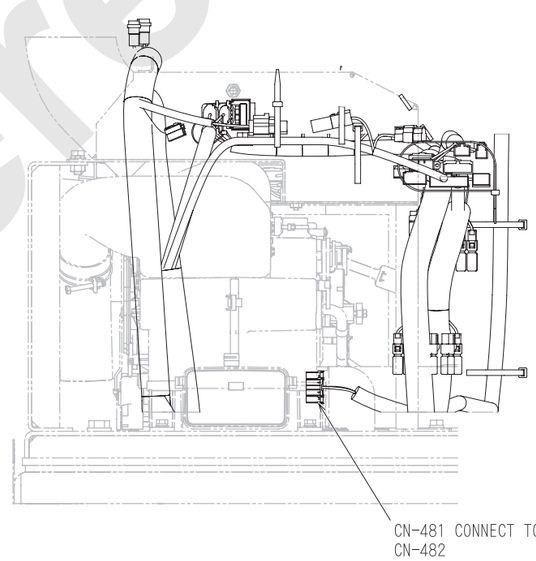

DETAIL OF SWITCHBOARD

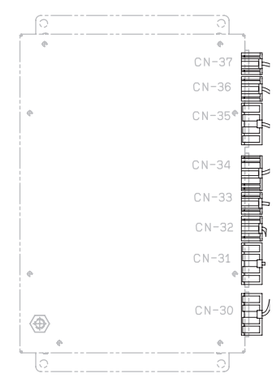

RELAY BOX
DETAIL OF CONNECTOR

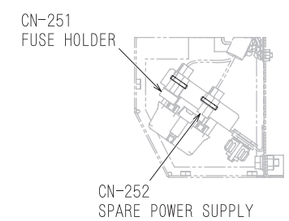

SECTION J-J

(4/4)

Reference only

FLOOR PLATE HARNESS (a)

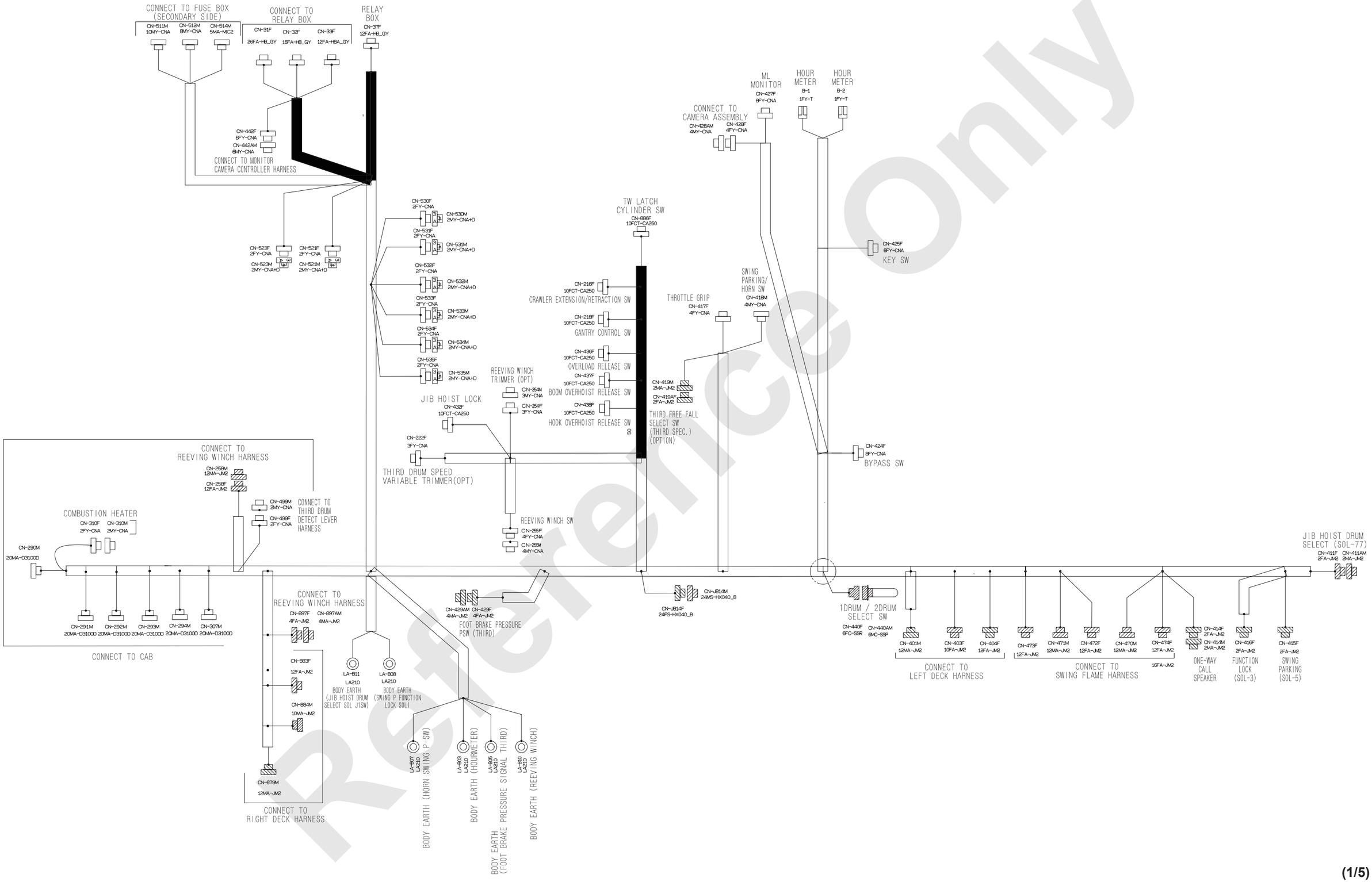

(1/5)

Reference Only

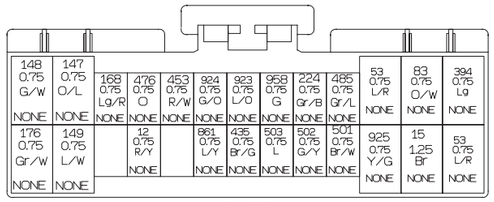

CN-31F
26FA-HB_GY

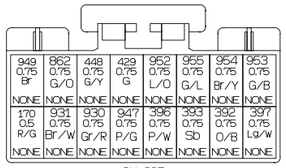

CN-32F
16FA-HB_GY

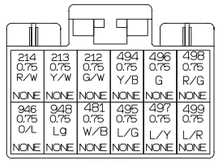

CN-33F
12FA-HBA_GY

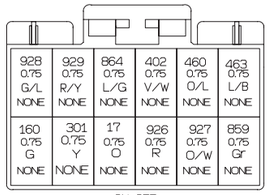

CN-37F
12FA-HB_GY

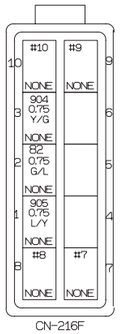

CN-216F
10FCT-CA250
#7 E03 0.75 B + E03 0.75 B
#8 750 0.75 W/R + 750 0.75 W/R
#9 E03 0.75 B + E03 0.75 B
#10 750 0.75 W/R + 750 0.75 W/R

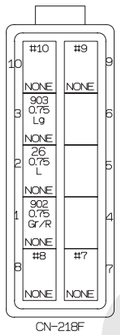

CN-218F
10FCT-CA250
#7 E03 0.75 B + E03 0.75 B
#8 750 0.75 W/R + 750 0.75 W/R
#9 E03 0.75 B + E03 0.75 B
#10 750 0.75 W/R + 750 0.75 W/R

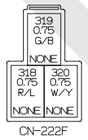

CN-222F
3FY-CNA

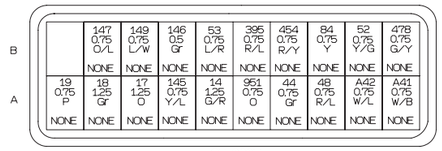

CN-290M
20MA-D3100D

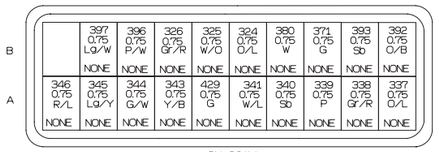

CN-291M
20MA-D3100D

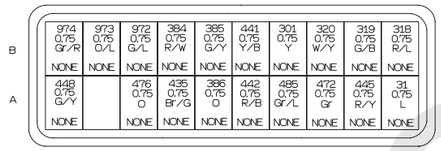

CN-292M
20MA-D3100D

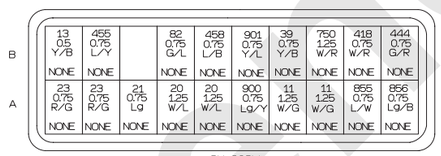

CN-293M
20MA-D3100D

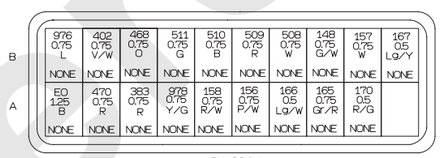

CN-294M
20MA-D3100D

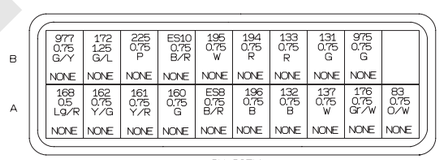

CN-307M
20MA-D3100D

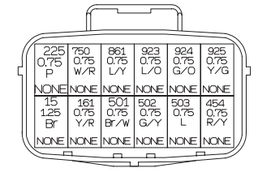

CN-401M
12MA-JM2

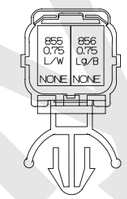

CN-414F
2FA-JM2

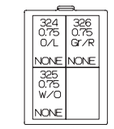

CN-417F
4FY-CNA

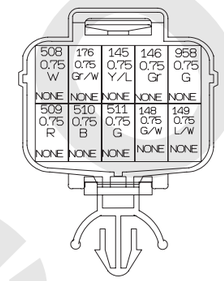

CN-403F
10FA-JM2

INSERT SEALING ON ALL EMPTY PINS

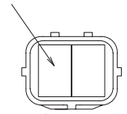

CN-414AM
2MA-JM2

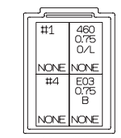

CN-418M
4MY-CNA
#1 395 0.75 R/L + 395 0.75 R/L
#4 861 0.75 L/Y + 861 0.75 L/Y

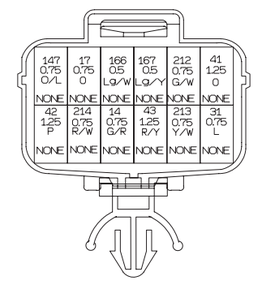

CN-404F
12FA-JM2

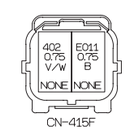

CN-415F
2FA-JM2

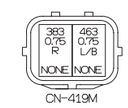

CN-419M
2MA-JM2

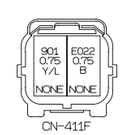

CN-411F
2FA-JM2

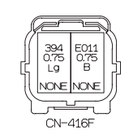

CN-416F
2FA-JM2

INSERT SEALING ON ALL EMPTY PINS

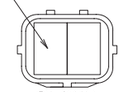

CN-411AM
2MA-JM2

INSERT SEALING ON ALL EMPTY PINS

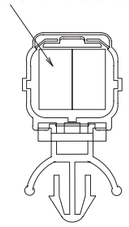

CN-419AF
2FA-JM2

(2/5)

Reference Only

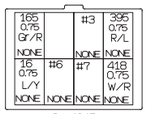

CN-424F
8FY-CNA

#3 15 1.25 Br +15 1.25 Br
#6 161 0.75 Y/R + 161 0.75 Y/R
#7 160 0.75 G + 160 0.75 G

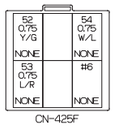

CN-425F
6FY-CNA

#6 11 1.25 W/G + 11 1.25 W/G

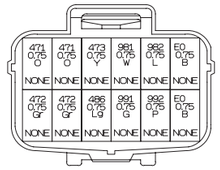

CN-258F
12FA-JM2

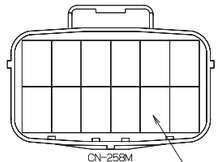

CN-258M
12MA-JM2

INSERT SEALING ON
ALL EMPTY PINS

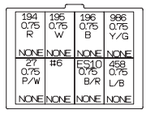

CN-427F
8FY-CNA

#6 E11 0.75 B/W +E11 0.75 B/W

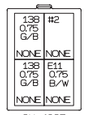

CN-428F
4FY-CNA

#2 E11 0.75 B/W+E11 0.75 B/W

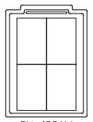

CN-428AM
4MY-CNA

SEALING

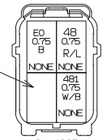

CN-429F
4FA-JM2

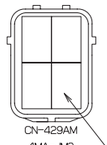

CN-429AM
4MA-JM2

INSERT SEALING ON
ALL EMPTY PINS

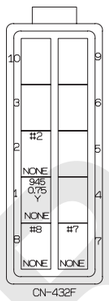

CN-432F
10FCT-CA250

#2 82 0.75 G/L +82 0.75 G/L
#7 E03 0.75 B + E03 0.75 B
#8 750 0.75 W/R + 750 0.75 W/R

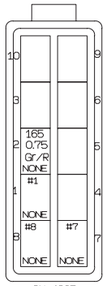

CN-436F
10FCT-CA250

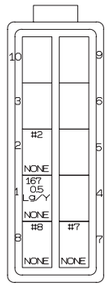

CN-437F
10FCT-CA250

#2 165 0.75 Gr/R + 165 0.75 Gr/R
#7 E03 0.75 B + E03 0.75 B
#8 750 0.75 W/R + 750 0.75 W/R

CN-438F
10FCT-CA250

#2 165 0.75 Gr/R + 165 0.75 Gr/R
#7 E03 0.75 B + E03 0.75 B
#8 750 0.75 W/R + 750 0.75 W/R

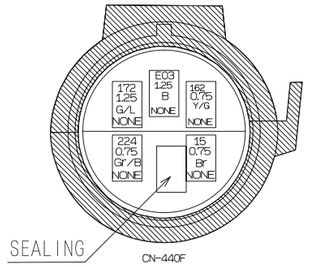

SEALING

CN-440F
6FC-SSR

INSERT SEALING ON
ALL EMPTY PINS

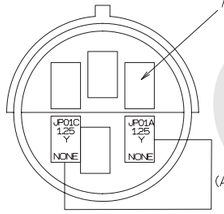

JUNPER
(AVSS 1.25sq)

CN-440AM
6MC-SSP

CN-442F
6FY-CNA
#5 E0 0.75 B + E0 0.75 B

CN-442AM
6MY-CNA

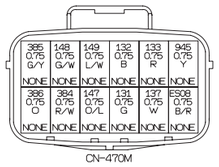

CN-470M
12MA-JM2

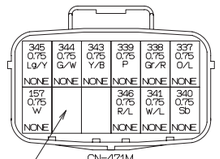

CN-471M
12MA-JM2

INSERT SEALING ON
ALL EMPTY PINS

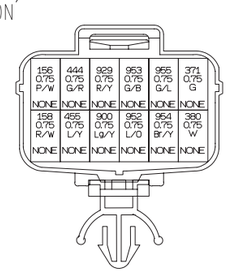

CN-472F
12FA-JM2

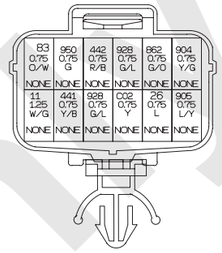

CN-473F
12FA-JM2

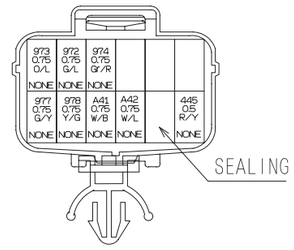

SEALING

CN-474F
12FA-JM2

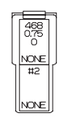

CN-499F
2FY-CNA
#2 E03 0.75 B + E03 0.75 B

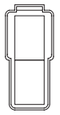

CN-499M
2MY-CNA

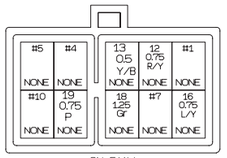

CN-511M
10MY-CNA

#1 11 1.25 W/G + 11 1.25 W/G
#4 14 0.75 G/R + 14 1.25 G/R
#5 15 1.25 Br +15 1.25 Br
#7 17 1.25 O + 17 0.75 O
#10 20 1.25 W/L + 20 1.25 W/L

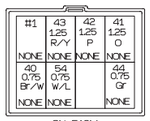

CN-512M
8MY-CNA

#1 31 0.75 L + 31 0.75 L

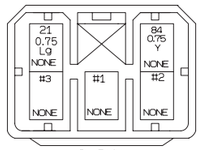

CN-514M
5MA-MIC2

#1 27 0.75 P/W + 27 0.75 P/W
#2 23 0.75 R/G + 23 0.75 R/G
#3 26 0.75 L + 26 0.75 L

(3/5)

Reference only

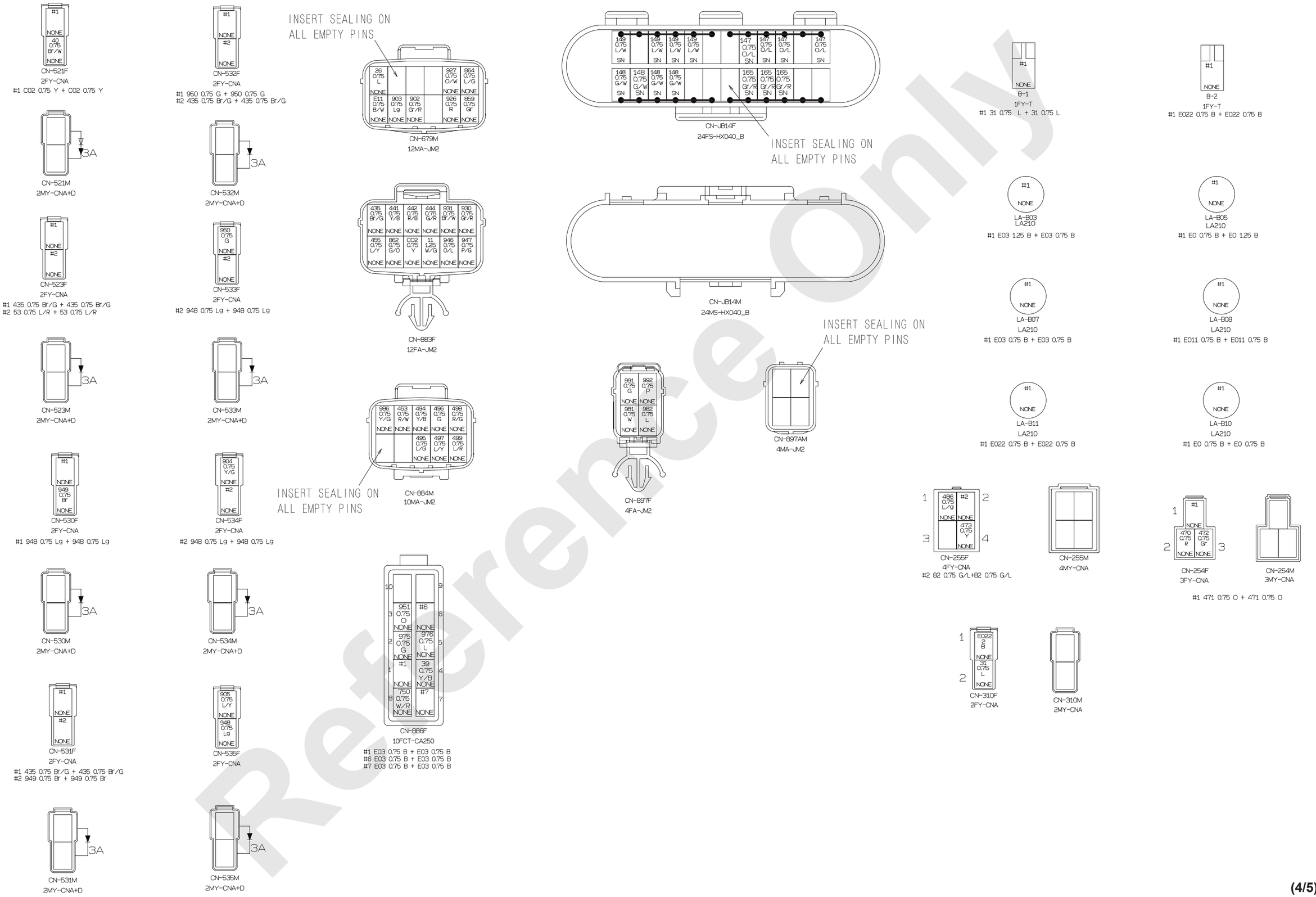

Reference Only

(4/5)

IHE WIRE NO /COLOR LISI

WIRE NO.	WIRE COLOR	WIRE TYPE	SIZE	FROM	2WIRE CONNECT NO.	CONNECTION	2WIRE CONNECT NO.	T 0
11	W/G	AVS	1.25	CN-473F			DS-B15	CN-425F
11	W/G	AVSS	1.25	CN-511M	DS-B01		DS-B15	CN-425F
11	W/G	AVSS	1.25	CN-511M	DS-B01			JS-B07
11	W/G	AVS	1.25	CN-293M				JS-B07
11	W/G	AVS	1.25	JS-B07				JS-B08
11	W/G	AVS	1.25	JS-B08				CN-883F
11	W/G	AVSS	1.25	JS-B08				CN-293M
12	R/Y	AVSS	0.75	CN-31F				CN-511M
13	Y/B	AVSS	0.5	CN-511M				CN-293M
14	G/R	AVSS	1.25	CN-290M			DS-B212	CN-511M
14	G/R	AVSS	0.75	CN-404F			DS-B212	CN-511M
15	Br	AVSS	1.25	CN-424F	DS-B213			CN-401M
15	Br	AVSS	1.25	CN-424F	DS-B213			JS-B122
15	Br	AVSS	0.75	CN-440F				JS-B122
15	Br	AVSS	1.25	CN-511M	DS-B214			JS-B122
15	Br	AVSS	1.25	CN-511M	DS-B214			CN-31F
16	L/Y	AVSS	0.75	CN-511M				CN-424F
17	O	AVSS	1.25	CN-511M	DS-B240			JS-B129
17	O	AVSS	0.75	CN-511M	DS-B240			CN-404F
17	O	AVSS	1.25	CN-290M				JS-B129
17	O	AVSS	0.75	CN-37F				JS-B129
18	Gr	AVSS	1.25	CN-290M				CN-511M
19	P	AVSS	0.75	CN-511M				CN-290M
20	W/L	AVSS	1.25	CN-293M			DS-B04	CN-511M
20	W/L	AVSS	1.25	CN-293M			DS-B04	CN-511M
21	Lg	AVSS	0.75	CN-514M				CN-293M
23	R/G	AVSS	0.75	CN-514M	DS-B215			CN-293M
23	R/G	AVSS	0.75	CN-514M	DS-B215			CN-293M
26	L	AVSS	0.75	CN-514M				CN-473F
26	L	AVSS	0.75	CN-514M				JS-B50
26	L	AVSS	0.75	CN-679M				JS-B50
26	L	AVSS	0.75	CN-218F				JS-B50
27	P/W	AVSS	0.75	CN-514M	DS-B241			CN-427F
27	P/W	AVSS	0.75	CN-514M	DS-B241			CN-442F
31	L	AVSS	0.75	CN-310F				CN-512M
31	L	AVSS	0.75	JS-B05				CN-512M
31	L	AVSS	0.75	JS-B05			DS-B24	B-1
31	L	AVSS	0.75	CN-404F			DS-B24	B-1
31	L	AVSS	0.75	CN-292M				JS-B05
39	Y/B	AVSS	0.75	CN-886F				CN-293M
40	Br/W	AVSS	0.75	CN-521F				CN-512M
41	O	AVSS	1.25	CN-404F				CN-512M
42	P	AVSS	1.25	CN-512M				CN-404F
43	R/Y	AVSS	1.25	CN-512M				CN-404F
44	Gr	AVSS	0.75	CN-512M				CN-290M
48	R/L	AVSS	0.75	CN-429F				CN-290M
52	Y/G	AVSS	0.75	CN-425F				CN-290M
53	L/R	AVSS	0.75	CN-425F			DS-B18	CN-523F
53	L/R	AVSS	0.75	JS-B114			DS-B18	CN-523F
53	L/R	AVSS	0.75	JS-B114				CN-290M
53	L/R	AVSS	0.75	JS-B114				JS-B123
53	L/R	AVSS	0.75	CN-31F				JS-B123
53	L/R	AVSS	0.75	CN-31F				JS-B123
54	W/L	AVSS	0.75	CN-425F				CN-512M
82	G/L	AVSS	0.75	CN-293M				CN-255F
82	G/L	AVSS	0.75	CN-432F				CN-255F
82	G/L	AVSS	0.75	CN-432F				CN-216F
83	O/W	AVSS	0.75	JS-B46				CN-31F
83	O/W	AVSS	0.75	JS-B46				CN-307M
83	O/W	AVSS	0.75	JS-B46				CN-473F
84	Y	AVSS	0.75	CN-514M				CN-290M
138	G/B	AVSS	0.75	CN-442F				CN-428F
138	G/B	AVSS	0.75	CN-442F				CN-428F
145	Y/L	AVSS	0.75	CN-290M				CN-403F
146	Gr	AVSS	0.75	CN-290M				CN-403F
147	O/L	AVSS	0.75	CN-JB14F				CN-290M
147	O/L	AVSS	0.75	CN-JB14F				CN-470M
147	O/L	AVSS	0.75	CN-JB14F				CN-404F
147	O/L	AVSS	0.75	CN-JB14F				CN-31F
148	G/W	AVSS	0.75	CN-JB14F				CN-31F
148	G/W	AVSS	0.75	CN-JB14F				CN-294M
148	G/W	AVSS	0.75	CN-JB14F				CN-470M
148	G/W	AVSS	0.75	CN-JB14F				CN-403F
149	L/W	AVSS	0.75	CN-JB14F				CN-31F
149	L/W	AVSS	0.75	CN-JB14F				CN-470M
149	L/W	AVSS	0.75	CN-JB14F				CN-403F
149	L/W	AVSS	0.75	CN-JB14F				CN-290M
156	P/W	AVSS	0.75	CN-472F				CN-294M
157	W	AVSS	0.75	CN-471M				CN-294M
158	R/W	AVSS	0.75	CN-472F				CN-294M
160	G	AVSS	0.75	CN-307M			DS-B45	CN-424F
160	G	AVSS	0.75	CN-37F			DS-B45	CN-424F
161	Y/R	AVSS	0.75	CN-424F	DS-B46			CN-307M
161	Y/R	AVSS	0.75	CN-424F	DS-B46			CN-401M
162	Y/G	AVSS	0.75	CN-307M				CN-440F
165	Gr/R	AVSS	0.75	CN-294M				CN-JB14F
165	Gr/R	AVSS	0.75	CN-424F				CN-JB14F
165	Gr/R	AVSS	0.75	CN-438F	DS-B220			CN-JB14F
165	Gr/R	AVSS	0.75	CN-438F	DS-B220		DS-B221	CN-437F
165	Gr/R	AVSS	0.75	CN-436F			DS-B221	CN-437F
166	Lg/W	AVSS	0.5	JS-B115				CN-294M
166	Lg/W	AVSS	0.5	JS-B115				CN-438F
166	Lg/W	AVSS	0.5	JS-B115				CN-404F
167	Lg/Y	AVSS	0.5	JS-B116				CN-294M
167	Lg/Y	AVSS	0.5	JS-B116				CN-404F
167	Lg/Y	AVSS	0.5	JS-B116				CN-437F
168	Lg/R	AVSS	0.5	CN-307M			DS-B222	CN-436F
168	Lg/R	AVSS	0.75	CN-31F			DS-B222	CN-436F
170	R/G	AVSS	0.5	CN-294M				CN-32F
172	G/L	AVSS	1.25	CN-440F				CN-307M
176	Gr/W	AVSS	0.75	CN-307M				JS-B121
176	Gr/W	AVSS	0.75	CN-403F				JS-B121
176	Gr/W	AVSS	0.75	CN-31F				JS-B121
212	G/W	AVSS	0.75	CN-404F				CN-33F
213	Y/W	AVSS	0.75	CN-33F				CN-404F
214	R/W	AVSS	0.75	CN-404F				CN-33F
224	Gr/B	AVSS	0.75	CN-31F				CN-440F
225	P	AVSS	0.75	CN-307M				CN-401M

WIRE NO.	WIRE COLOR	WIRE TYPE	SIZE	FROM	2WIRE CONNECT NO.	CONNECTION	2WIRE CONNECT NO.	T 0
301	Y	AVSS	0.75	CN-292M				CN-37F
318	R/L	AVSS	0.75	CN-292M				CN-222F
319	G/B	AVSS	0.75	CN-222F				CN-292M
320	W/Y	AVSS	0.75	CN-222F				CN-292M
324	O/L	AVSS	0.75	CN-291M				CN-417F
325	W/O	AVSS	0.75	CN-417F				CN-291M
326	Gr/R	AVSS	0.75	CN-291M				CN-417F
337	O/L	AVSS	0.75	CN-471M				CN-291M
338	Gr/R	AVSS	0.75	CN-471M				CN-291M
339	P	AVSS	0.75	CN-471M				CN-291M
340	Sb	AVSS	0.75	CN-471M				CN-291M
341	W/L	AVSS	0.75	CN-291M				CN-471M
343	Y/B	AVSS	0.75	CN-291M				CN-471M
344	G/W	AVSS	0.75	CN-471M				CN-291M
345	Lg/Y	AVSS	0.75	CN-291M				CN-471M
346	R/L	AVSS	0.75	CN-291M				CN-471M
383	R	AVSS	0.75	CN-294M				CN-419M
384	R/W	AVSS	0.75	CN-292M				CN-470M
385	G/Y	AVSS	0.75	CN-470M				CN-292M
386	O	AVSS	0.75	CN-292M				CN-470M
394	Lg	AVSS	0.75	CN-31F				CN-416F
395	R/L	AVSS	0.75	CN-290M			DS-B230	CN-418M
395	R/L	AVSS	0.75	CN-424F			DS-B230	CN-418M
402	V/W	AVSS	0.75	CN-294M				JS-B21
402	V/W	AVSS	0.75	CN-37F				JS-B21
402	V/W	AVSS	0.75	JS-B21				CN-415F
411	W/Y	AVSS	0.75	CN-290M				CN-474F
418	W/R	AVSS	0.75	CN-424F				CN-293M
429	G	AVSS	0.75	CN-291M				CN-32F
435	Br/G	AVSS	0.75	CN-292M				JS-B126
435	Br/G	AVSS	0.75	CN-883F				JS-B126
435	Br/G	AVSS	0.75	CN-532F				JS-B126
435	Br/G	AVSS	0.75	CN-532F				CN-531F
435	Br/G	AVSS	0.75	CN-523F				CN-531F
435	Br/G	AVSS	0.75	CN-523F				CN-31F
441	Y/B	AVSS	0.75	CN-292M				JS-B131
441	Y/B	AVSS	0.75	CN-473F				JS-B131
441	Y/B	AVSS	0.75	CN-883F				JS-B131
442	R/B	AVSS	0.75	CN-292M				JS-B132
442	R/B	AVSS	0.75	CN-473F				JS-B132
442	R/B	AVSS	0.75	CN-883F				JS-B132
444	G/R	AVSS	0.75	CN-293M				JS-B133
444	G/R	AVSS	0.75	CN-472F				JS-B133
444	G/R	AVSS	0.75	CN-883F				JS-B133
445	R/Y	AVSS	0.75	CN-292M				CN-474F
448	G/Y	AVSS	0.75	CN-32F				CN-292M
453	R/W	AVSS	0.75	CN-31F				CN-884M
454	R/Y	AVSS	0.75	CN-290M				CN-401M
455	L/Y	AVSS	0.75	CN-293M				JS-B134
455	L/Y	AVSS	0.75	CN-472F				JS-B134
455	L/Y	AVSS	0.75	CN-883F				JS-B134
458	L/B	AVSS	0.75	CN-293M				CN-427F
460	O/L	AVSS	0.75	CN-418M				CN-37F
463	L/B	AVSS	0.75	CN-419M				CN-37F
468	O	AVSS	0.75	CN-294M				CN-499F
470	R	AVSS	0.75	CN-254F				CN-294M
471	O	AVSS	0.75	CN-254F				CN-258F
471	O	AVSS	0.75	CN-254F				CN-258F
472	Gr	AVSS	0.75	JS-01				CN-292M
472	Gr	AVSS	0.75	JS-01				CN-254F
472	Gr	AVSS	0.75	JS-01				JS-02
472	Gr	AVSS	0.75	CN-258F				JS-02
472	Gr	AVSS	0.75	CN-258F				JS-02
473	Y	AVSS	0.75	CN-255F				CN-258F
476	O	AVSS	0.75	CN-31F				CN-292M
481	W/B	AVSS	0.75	CN-429F				CN-33F
485	Gr/L	AVSS	0.75	CN-31F				CN-292M
486	Lg	AVSS	0.75	CN-255F				CN-258F
501	Br/W	AVSS	0.75	CN-31F				CN-401M
502	G/Y	AVSS	0.75	CN-401M				CN-31F
503	L	AVSS	0.75	CN-31F				CN-401M
750	W/R	AVSS	0.75	JS-B120				CN-401M
750	W/R	AVSS	1.25	JS-B120				CN-293M
750	W/R	AVSS	0.75	JS-B120			DS-B59	CN-432F
750	W/R	AVSS	0.75	CN-438F	DS-B61		DS-B59	CN-432F
750	W/R	AVSS	0.75	CN-438F	DS-B61		DS-B100	CN-437F
750	W/R	AVSS	0.75	CN-436F	DS-B101		DS-B100	CN-437F
750	W/R	AVSS	0.75	CN-436F	DS-B101		DS-B102	CN-218F
750	W/R	AVSS	0.75	CN-218F	DS-B106		DS-B102	CN-218F
750	W/R	AVSS	0.75	CN-218F	DS-B106		DSA95	CN-216F
750	W/R	AVSS	0.75	CN-216F	DS-B226		DSA95	CN-216F
750	W/R	AVSS	0.75	CN-216F	DS-B226			CN-886F
859	Gr	AVSS	0.75	CN-37F				CN-679M
861	L/Y	AVSS	0.75	CN-401M			DS-B41	CN-418M
861	L/Y	AVSS	0.75	CN-31F			DS-B41	CN-418M
862	G/O	AVSS	0.75	CN-32F				JS-B10
862	G/O	AVSS	0.75	CN-883F				JS-B10
862	G/O	AVSS	0.75	CN-473F				JS-B10
864	L/G	AVSS	0.75	CN-37F				CN-679F

WIRE NO.	WIRE COLOR	WIRE TYPE	SIZE	FROM	2WIRE CONNECT NO.	CONNECTION	2WIRE CONNECT NO.	T 0
900	Lg/Y	AVSS	0.75	CN-472F				CN-293M
901	Y/L	AVSS	0.75	CN-411F				CN-293M
902	Gr/R	AVSS	0.75	CN-218F				CN-679M
903	Lg	AVSS	0.75	CN-679M				CN-218F
904	Y/G	AVSS	0.75	CN-216F				JS-B31
904	Y/G	AVSS	0.75	CN-473F				JS-B31
904	Y/G	AVSS	0.75	JS-B31				CN-534F
905	L/Y	AVSS	0.75	JS-B30				CN-216F
905	L/Y	AVSS	0.75	CN-473F				JS-B30
905	L/Y	AVSS	0.75	JS-B30				CN-535F
923	L/O	AVSS	0.75	CN-31F				CN-401M
924	G/O	AVSS	0.75	CN-31F				CN-401M
925	Y/G	AVSS	0.75	CN-31F				CN-401M
926	R	AVSS	0.75	CN-37F				CN-679F
927	O/W	AVSS	0.75	CN-37F				CN-679F
928	G/L	AVSS	0.75	CN-37F				JS-B48
928	G/L	AVSS	0.75	CN-473F				JS-B48
928	G/L	AVSS	0.75	CN-473F				JS-B48
929	R/Y	AVSS	0.75	CN-37F				CN-472F
930	Gr/R	AVSS	0.75	CN-32F				CN-883F
931	Br/W	AVSS	0.75	CN-32F				CN-883F
945	Y	AVSS	0.75	CN-432F				CN-470M
946	O/L	AVSS	0.75	CN-33F				CN-883F
947	P/G	AVSS	0.75	CN-32F				CN-883F
948	Lg	AVSS	0.75	CN-535F			DS-B227	CN-534F
948	Lg	AVSS	0.75	CN-530F	DS-B34		DS-B227	CN-534F
948	Lg	AVSS	0.75	CN-530F	DS-B34		DS-B39	CN-533F
948	Lg	AVSS	0.75	CN-33F			DS-B39	CN-533F
949	Br	AVSS	0.75	CN-531F	DS-B36			CN-32F
949	Br	AVSS	0.75	CN-531F	DS-B36			CN-530F
950	G	AVSS	0.75	CN-473F			DS-B37	CN-532F
950	G	AVSS	0.75	CN-533F			DS-B37	CN-532F
951	O	AVSS	0.75	CN-886F				CN-290M
958	G	AVSS	0.75	CN-31F				CN-403F
972	G/L	AVSS	0.75	CN-474F				CN-292M
973	O/L	AVSS	0.75	CN-292M				CN-474F
974	Gr/R	AVSS	0.75	CN-474F				CN-292M
975	G	AVSS	0.75	CN-307M				CN-886F
976	L	AVSS	0.75	CN-294M				CN-886F
977	G/Y	AVSS	0.75	CN-307M				CN-474F
978	Y/G	AVSS	0.75	CN-294M				CN-474F
981	W	AVSS	0.75	CN-897F				CN-258F
982	L	AVSS	0.75	CN-897F				CN-258F
986	Y/G	AVSS	0.75	CN-427F				CN-884M
991	G	AVSS	0.75	CN-897F				CN-258F
992	P	AVSS	0.75	CN-897F				CN-258F
CO2	Y	AVSS	0.75	CN-521F				CN-883F
CO2	Y	AVSS	0.75	CN-521F				CN-473F
JP01A	Y	AVSS	1.25	CN-440AM				(CN-440AM)
JP01C	Y	AVSS	1.25	(CN-440AM)				CN-440AM

WIRE NO.	WIRE COLOR	WIRE TYPE	SIZE	FROM	2WIRE CONNECT NO.	CONNECTION	2WIRE CONNECT NO.	T 0
392	O/B	AVSS	0.75	CN-291M				CN-32F
393	Sb	AVSS	0.75	CN-291M				CN-32F
371	G	AVSS	0.75	CN-291M				CN-472F
380	W	AVSS	0.75	CN-291M				CN-472F
396	P/W	AVSS	0.75	CN-291M				CN-32F
397	Lg/W	AVSS	0.75	CN-291M				CN-32F
494	Y/B	AVSS	0.75	CN-884M				CN-33F
495	L/G	AVSS	0.75	CN-884M				CN-33F
496	G	AVSS	0.75	CN-884M				CN-33F
497	L/Y	AVSS	0.75	CN-884M				CN-33F
498	R/G	AVSS	0.75	CN-884M				CN-33F
499	L/R	AVSS	0.75	CN-884M				CN-33F
855	L/W	AVSS	0.75	CN-414F				CN-293M
856	Lg/B	AVSS	0.75	CN-414F				CN-293M
952	L/O	AVSS	0.75	CN-472F				CN-32F
953	G/B	AVSS	0.75	CN-32F				CN-472F
954	Br/Y	AVSS	0.75	CN-32F				CN-472F
955	G/L	AVSS	0.75	CN-32F				CN-472F
A41	W/B	AVSS	0.75	CN-290M				CN-474F
A42	W/L	AVSS	0.75	CN-290M				CN-474F
131	G	MVVS	0.75	CN-470M				CN-307M
132	B	MVVS	0.75	CN-470M				CN-307M
133	R	MVVS	0.75	CN-470M				CN-307M
137	W	MVVS	0.75	CN-470M				CN-307M
ES8	B/R	AVSS	0.75	(CN-470F)				CN-307M
ES08	B/R	AVSS	0.75	CN-470M				(CN-307M)
194	R	MVVS	0.75	CN-427F				CN-307M
195	W	MVVS	0.75	CN-427F				CN-307M
196	B	MVVS	0.75	CN-427F				CN-307M
ES10	B/R	MVVS	0.75	CN-427F				CN-307M
508	W	MVVS	0.75	CN-294M				CN-403F
509	R	MVVS	0.75	CN-294M				CN-403F
510	B	MVVS	0.75	CN-294M				CN-403F
511	G	MVVS	0.75	CN-294M				CN-403F
E0	B	AVSS	1.25	CN-294M			DS-B228	LA-B05
E0	B	AVSS	0.75	CN-429F			DS-B228	LA-B05
E0	B	AVSS	0.75	CN-258F				LA-B10
E0	B	AVSS	0.75	CN-442F				LA-B10
E0	B	AVSS	0.75	CN-442F				CN-258F
E03	B	AVSS	1.25	CN-440F			DS-B25	LA-B03
E03	B	AVSS	0.75	CN-499F	DS-B106		DS-B25	LA-B03
E03	B	AVSS	0.75	CN-499F	DS-B106		DS-B105	CN-432F
E03	B	AVSS	0.75	CN-438F	DS-B64		DS-B105	CN-432F
E03	B	AVSS	0.75	CN-438F	DS-B64		DS-B63	CN-437F
E03	B	AVSS	0.75	CN-436F	DS-B229		DS-B63	CN-437F
E03	B	AVSS	0.75	CN-436F	DS-B229		DS-B104	CN-218F
E03	B	AVSS	0.75	CN-218F	DS-B103		DS-B104	CN-218F
E03	B	AVSS	0.75	CN-218F	DS-B103		DS-B237	CN-216F
E03	B	AVSS	0.75	CN-216F	DS-B238		DS-B237	CN-216F
E03	B	AVSS	0.75	CN-216F	DS-B238		DS-B234	CN-886F
E03	B	AVSS	0.75	CN-886F	DS-B235		DS-B234	CN-886F
E03	B	AVSS	0.75	CN-886F	DS-B235		DS-B239	CN-886F
E03	B	AVSS	0.75	LA-B07	DS-B75		DS-B239	CN-886F
E03	B	AVSS	0.75	LA-B07	DS-B75			CN-418M
E011	B	AVSS	0.75	LA-B08	DS-B67			CN-416F
E011	B	AVSS	0.75	LA-B08	DS-B67			CN-415F
E022	B	AVS	2	LA-B11	DS-B43			CN-310F
E022	B	AVSS	0.75	LA-B11	DS-B43		DS-B242	B-2
E022	B	AVSS	0.75	CN-411F			DS-B242	B-2
E11	B/W	AVSS	0.75	CN-427F	DS-B108			CN-679F
E11	B/W	AVSS	0.75	CN-427F	DS-B108		DS-B109	CN-428F
E11	B/W	AVSS	0.75	CN-428F			DS-B109	CN-428F

(5/5)

Reference Only

FLOOR PLATE HARNESS (b)

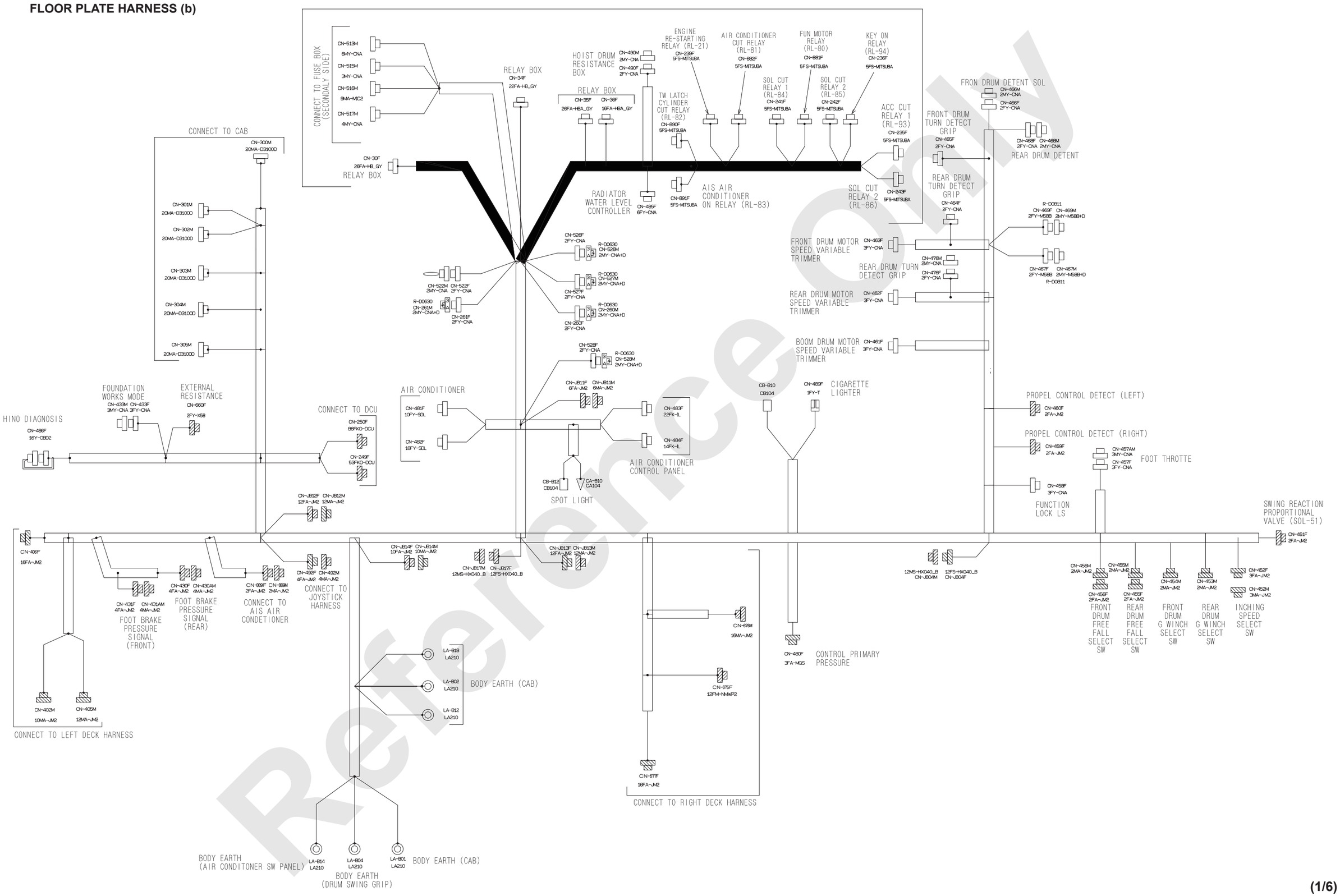

(1/6)

Reference Only

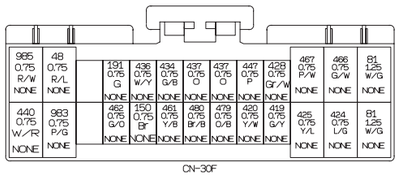

CN-30F
26FA-HB_W

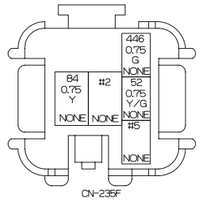

CN-235F
5FS-MITSUBA
#2 983 0.75 P/G+983 0.75 P/G
#5 46 1.25 O/L+46 0.75 O/L

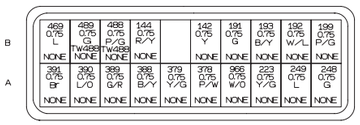

CN-301M
20MA-D3100D

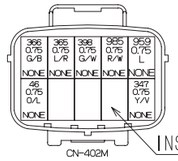

CN-402M
10MA-JM2

INSERT SEALING ON ALL EMPTY PINS

CN-451F
2FA-JM2

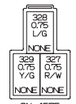

CN-457F
3FY-CNA

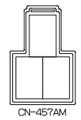

CN-457AM
3MY-CNA

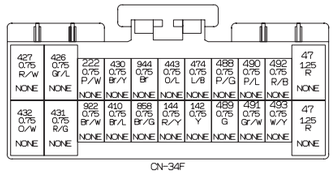

CN-34F
22FA-HB_GY

VACANCY

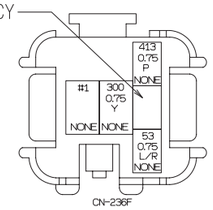

CN-236F
5FS-MITSUBA
#1 53 0.75 L/R+53 0.75 L/R

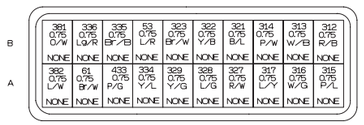

CN-302M
20MA-D3100D

INSERT SEALING ON ALL EMPTY PINS

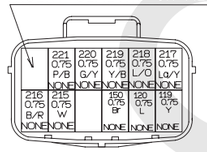

CN-405M
12MA-JM2

SEALING

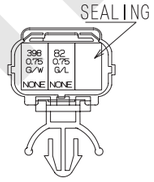

CN-452F
3FA-JM2

INSERT SEALING ON ALL EMPTY PINS

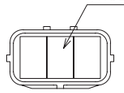

CN-452M
3MA-JM2

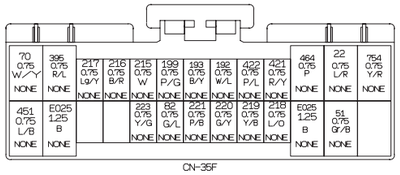

CN-35F
26FA-HB_GY

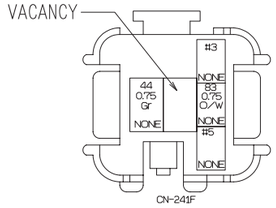

CN-239F
5FS-MITSUBA
#1 22 0.75 L/R+22 0.75 L/R
#5 22 0.75 L/R+22 0.75 L/R

VACANCY

CN-241F
5FS-MITSUBA
#5 983 0.75 P/G+983 0.75 P/G
#3 E08 0.75 +E08 0.75 B

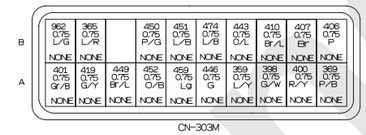

CN-303M
20MA-D3100D

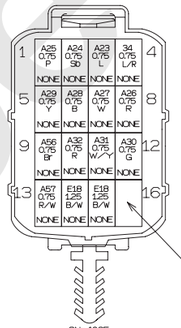

INSERT SEALING ON ALL EMPTY PINS

CN-406F
16FA-JM2

CN-453M
2MA-JM2

CN-454M
2MA-JM2

INSERT SEALING ON ALL EMPTY PINS

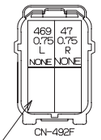

CN-492F
4FA-JM2

CN-492M
4MA-JM2

INSERT SEALING ON ALL EMPTY PINS

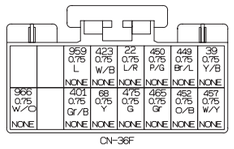

CN-36F
16FA-HB_GY

VACANCY

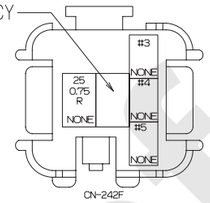

CN-242F
5FS-MITSUBA
#4 82 0.75 G/L+82 1.25 G/L
#5 983 0.75 P/G+983 0.75 P/G
#3 E08 0.75 +E08 0.75 B

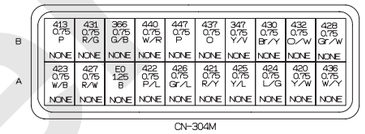

CN-304M
20MA-D3100D

SEALING

CN-430F
4FA-JM2

INSERT SEALING ON ALL EMPTY PINS

CN-430AM
4MA-JM2

INSERT SEALING ON ALL EMPTY PINS

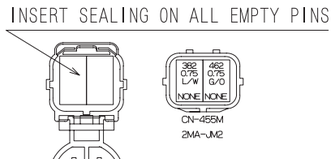

CN-455F
2FA-JM2

CN-455M
2MA-JM2

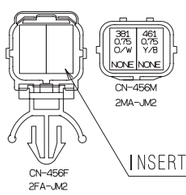

CN-456M
2MA-JM2

CN-456F
2FA-JM2

INSERT SEALING ON ALL EMPTY PINS

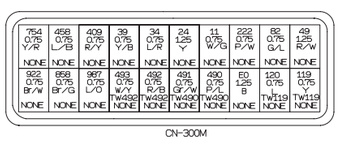

CN-300M
20MA-D3100D

VACANCY

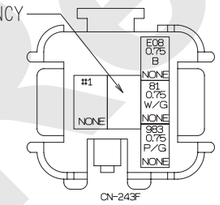

CN-243F
5FS-MITSUBA
#1 46 0.75 O/L+46 0.75 O/L

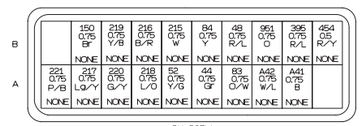

CN-305M
20MA-D3100D

SEALING

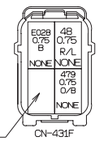

CN-431F
4FA-JM2

INSERT SEALING ON ALL EMPTY PINS

CN-431AM
4MA-JM2

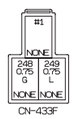

CN-433F
3FY-CNA
#1 E08 0.75 B + E08 0.75 B

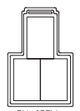

CN-433M
3MY-CNA

Reference Only

(2/6)

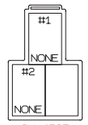

CN-458F
3FY-CNA
#1 82 1.25 G/L + 82 1.25 G/L
#2 395 0.75 R/L + 395 0.75 R/L

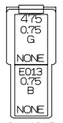

CN-464F
2FY-CNA

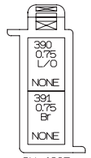

CN-469F
2FY-M58B

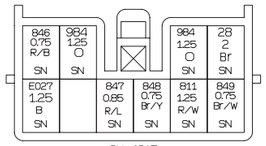

CN-481F
10FY-SDL

CN-489F
1FY-T
#1 E08 1.25 B + E08 1.25 B

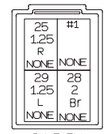

CN-517M
4MY-CNA
#1 22 0.75 L/R + 22 0.75 L/R

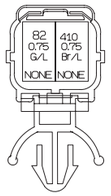

CN-459F
2FA-JM2

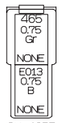

CN-465F
2FY-CNA

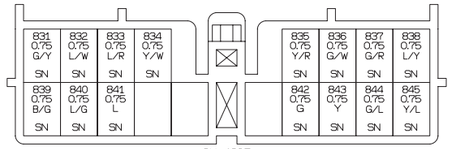

CN-482F
18FY-SDL

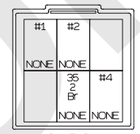

CN-513M
6MY-CNA
#1 33 0.75 G/B + 33 0.75 G/B
#2 32 0.75 R/W + 32 0.75 R/W
#4 34 0.75 L/R + 34 2 L/R

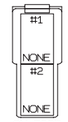

CN-522F
2FY-CNA
#1 400 0.75 R/Y + 400 0.75 R/Y
#2 40 0.75 Br/W + 40 0.75 Br/W

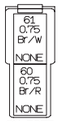

CN-527F
2FY-CNA

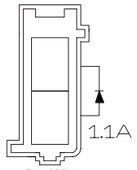

CN-469M
2MY-M58B+D

CN-466F
2FY-CNA
#1 389 0.75 G/R + 389 0.75 G/R
#2 388 0.75 B/Y + 388 0.75 B/Y

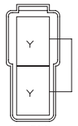

CN-522M
2MY-CNA

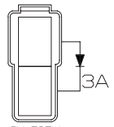

CN-527M
2MY-CNA+D

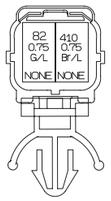

CN-460F
2FA-JM2

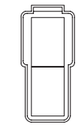

CN-466M
2MY-CNA

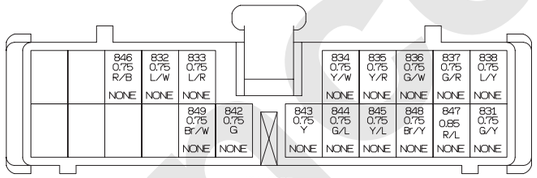

CN-483F
22FK-IL

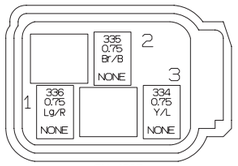

CN-480F
3FA-MQS

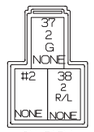

CN-515M
3MY-CNA
#2 39 0.75 Y/B + 39 0.75 Y/B

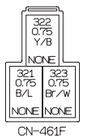

CN-461F
3FY-CNA

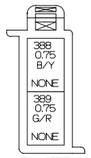

CN-467F
2FY-M58B

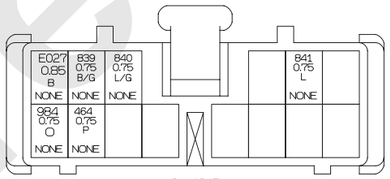

CN-484F
14FK-IL

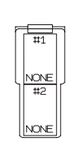

CN-526F
2FY-CNA
#1 464 0.75 P + 464 0.75 P
#2 60 0.75 Br/R + 60 0.75 Br/R

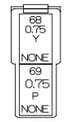

CN-528F
2FY-CNA

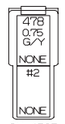

CN-476F
2FY-CNA
#2 E013 0.75 B + E013 0.75 B

CN-476M
2MY-CNA

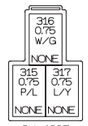

CN-462F
3FY-CNA

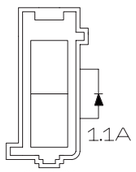

CN-467M
2MY-M58B+D

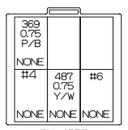

CN-485F
6FY-CNA
#4 22 0.75 L/R + 22 0.75 L/R
#6 E08 0.75 B + E08 1.25 B

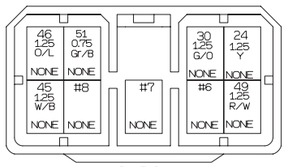

CN-516M
9MA-MIC2
#6 40 0.75 Br/W + 40 0.75 Br/W
#7 47 1.25 R + 47 0.75 R
#8 48 0.75 R/L + 48 0.75 R/L

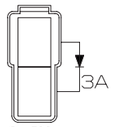

CN-526M
2MY-CNA+D

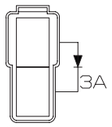

CN-528M
2MY-CNA+D

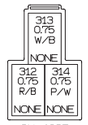

CN-463F
3FY-CNA

CN-468F
2FY-CNA
#1 391 0.75 Br + 391 0.75 Br
#2 390 0.75 L/O + 390 0.75 L/O

CN-468M
2MY-CNA

Reference Only

(3/6)

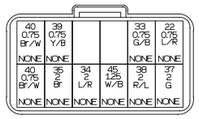

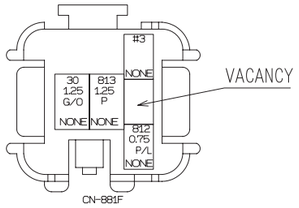

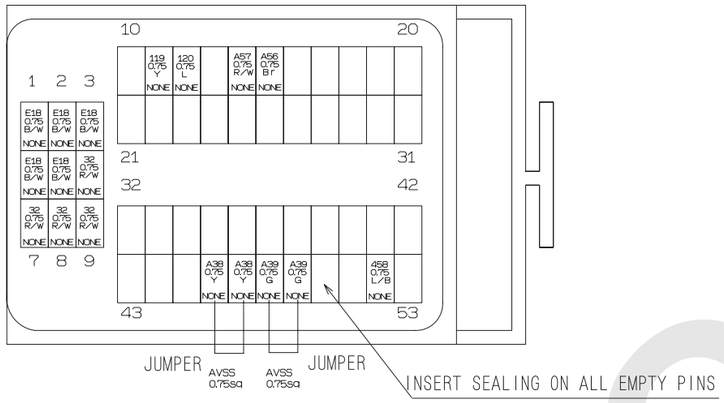

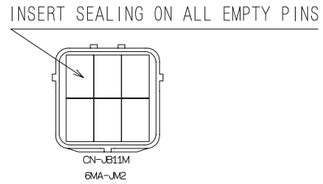

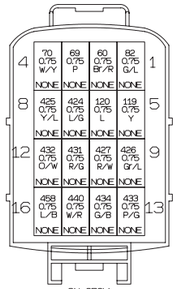

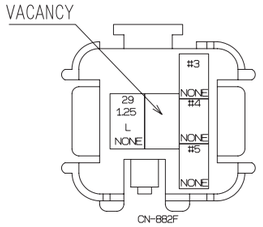

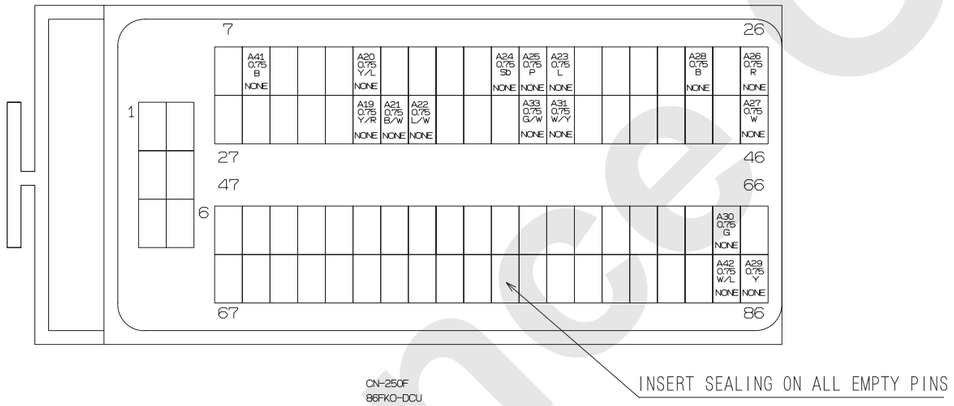

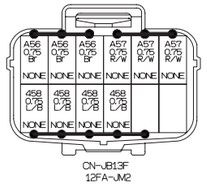

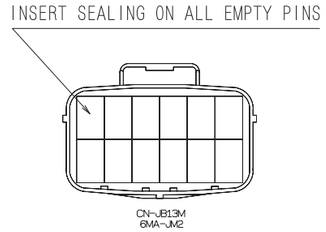

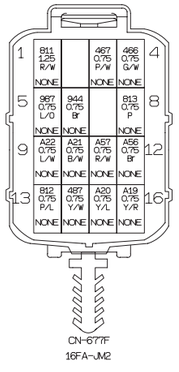

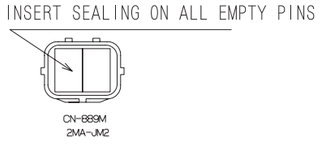

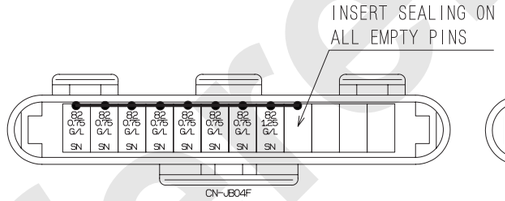

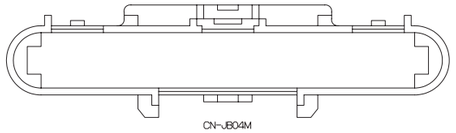

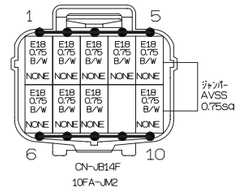

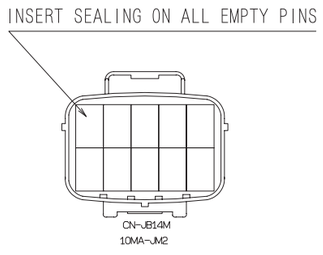

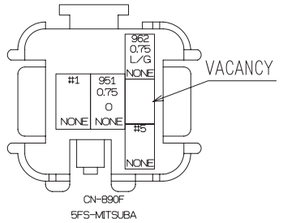

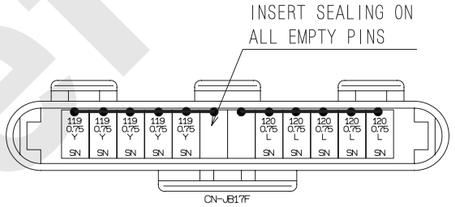

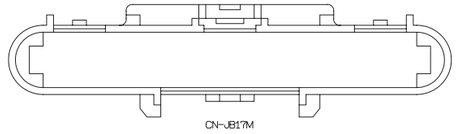

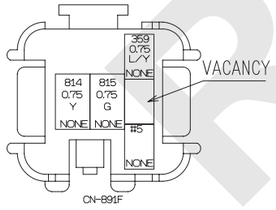

(4/6)

Reference only

CA-B10
CA104
#1 E027 0.85 B + E027 1.25 B

LA-B01
LA210
#1 E028 0.75 B + E028 0.75 B

LA-B02
LA210
#1 E08 0.75 B + E08 1.25 B

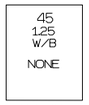

CB-B10
CB104

LA-B04
LA210
#1 E013 0.75 B + E013 0.75 B

LA-B12
LA210
#1 E025 1.25 B + E025 1.25 B

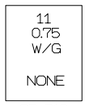

CB-B12
CB104

LA-B14
LA210
#1 E027 1.25 B + E027 1.25 B

LA-B18
LA210
#1 E0 1.25 B + E0 1.25 B

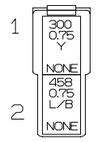

CN-260F
2FY-CNA

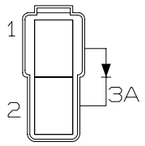

CN-260M
2MY-CNA+D

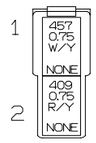

CN-261F
2FY-CNA

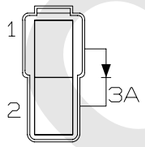

CN-261M
2MY-CNA+D

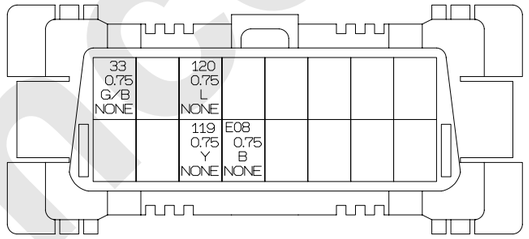

CN-486F
16FY-0BD2

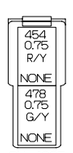

CN-490F
2FY-CNA

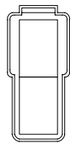

CN-490M
2MY-CNA

CN-660F
2FY-X58

Reference Only

(5/6)

THE WIRE NO. /COLOR LIST

WIRE NO.	WIRE COLOR	WIRE TYPE	SIZE	FROM	2WIRE CONNECT NO.	CONNECTION	2WIRE CONNECT NO.	T 0
11	W/G	AVSS	0.75	CB-B12				CN-300M
22	L/R	AVSS	0.75	CN-517M				CN-675F
22	L/R	AVSS	0.75	CN-517M				CN-239F
22	L/R	AVSS	0.75	CN-239F	DS-B200			CN-239F
22	L/R	AVSS	0.75	CN-239F	DS-B200		DS-B08	CN-485F
22	L/R	AVSS	0.75	JS-B12			DS-B08	CN-485F
22	L/R	AVSS	0.75	JS-B12				CN-36F
22	L/R	AVSS	0.75	JS-B12				CN-36F
24	Y	AVSS	1.25	CN-300M				CN-516M
25	R	AVSS	0.75	CN-517M				CN-242F
28	Br	AVSS	2	CN-517M				CN-481F
29	L	AVSS	1.25	CN-517M				CN-882F
30	G/O	AVSS	1.25	CN-881F				CN-516M
32	R/W	AVSS	0.75	CN-513M	DS-B12			CN-JB12F
32	R/W	AVSS	0.75	CN-513M	DS-B12			CN-JB12F
32	R/W	AVSS	0.75	CN-249F				CN-JB12F
32	R/W	AVSS	0.75	CN-249F				CN-JB12F
32	R/W	AVSS	0.75	CN-249F				CN-JB12F
32	R/W	AVSS	0.75	CN-249F				CN-JB12F
33	G/B	AVSS	0.75	CN-513M				CN-486F
33	G/B	AVSS	0.75	CN-513M				CN-675F
34	L/R	AVS	2	CN-513M	DS-B09			CN-675F
34	L/R	AVSS	0.75	CN-513M	DS-B09			CN-JB12F
34	L/R	AVSS	0.75	CN-300M				CN-JB12F
34	L/R	AVSS	0.75	CN-406F				CN-JB12F
35	Br	AVS	2	CN-513M				CN-675F
37	G	AVS	2	CN-515M				CN-675F
38	R/L	AVS	2	CN-515M				CN-675F
39	Y/B	AVSS	0.75	CN-300M			DS-B201	CN-515M
39	Y/B	AVSS	0.75	CN-890F	DS-B231		DS-B201	CN-515M
39	Y/B	AVSS	0.75	CN-890F	DS-B231		DS-B232	CN-890F
39	Y/B	AVSS	0.75	JS-B104			DS-B232	CN-890F
39	Y/B	AVSS	0.75	JS-B104				CN-36F
39	Y/B	AVSS	0.75	JS-B104				CN-675F
40	Br/W	AVSS	0.75	CN-675F			DS-B12	CN-516M
40	Br/W	AVSS	0.75	CN-522F	DS-B22		DS-B12	CN-516M
40	Br/W	AVSS	0.75	CN-522F	DS-B22			CN-675F
44	Gr	AVSS	0.75	CN-305M				CN-241F
45	W/B	AVSS	1.25	CN-516M				CN-JB12F
45	W/B	AVSS	1.25	CN-675F				CN-JB12F
45	W/B	AVSS	1.25	CB-B10				CN-JB12F
46	O/L	AVSS	1.25	CN-516M			DS-B12	CN-235F
46	O/L	AVSS	0.75	CN-243F	DS-B22		DS-B12	CN-235F
46	O/L	AVSS	0.75	CN-243F	DS-B22			CN-891F
46	O/L	AVSS	0.75	CN-402M				CN-891F
47	R	AVSS	0.75	CN-492F			DS-47	CN-516M
47	R	AVSS	1.25	CN-JB11F			DS-47	CN-516M
47	R	AVSS	1.25	CN-JB11F				CN-34F
47	R	AVSS	1.25	CN-JB11F				CN-34F
48	R/L	AVSS	0.75	CN-516M	DS-B204			CN-30F
48	R/L	AVSS	0.75	CN-516M	DS-B204			JS-B114
48	R/L	AVSS	0.75	CN-305M				JS-B114
48	R/L	AVSS	0.75	CN-430F				JS-B114
48	R/L	AVSS	0.75	CN-431F				JS-B114
49	R/W	AVSS	1.25	CN-300M				CN-516M
51	Gr/B	AVSS	0.75	CN-516M				CN-35F
52	Y/G	AVSS	0.75	CN-305M				CN-235F
53	L/R	AVSS	0.75	CN-302M				CN-236F
53	L/R	AVSS	0.75	CN-236F				CN-236F
60	Br/R	AVSS	0.75	CN-676M			DS-B33	CN-526F
60	Br/R	AVSS	0.75	CN-527F			DS-B33	CN-526F
61	Br/W	AVSS	0.75	CN-527F				CN-302M
68	Y	AVSS	0.75	CN-36F				CN-528F
69	P	AVSS	0.75	CN-528F				CN-676M
70	W/Y	AVSS	0.75	CN-676M				CN-35F
81	W/G	AVSS	1.25	CN-JB11F				CN-243F
81	W/G	AVSS	1.25	CN-JB11F				CN-30F
81	W/G	AVSS	1.25	CN-JB11F				CN-30F
82	G/L	AVSS	0.75	CN-242F	DS-B05			CN-300M
82	G/L	AVSS	1.25	CN-242F	DS-B05		DS-B40	CN-458F
82	G/L	AVSS	1.25	CN-JB04F			DS-B40	CN-458F
82	G/L	AVSS	0.75	CN-JB04F				CN-454M
82	G/L	AVSS	0.75	CN-JB04F				CN-453M
82	G/L	AVSS	0.75	CN-JB04F				CN-35F
82	G/L	AVSS	0.75	CN-JB04F				CN-452F
82	G/L	AVSS	0.75	CN-JB04F				CN-459F
82	G/L	AVSS	0.75	CN-JB04F				CN-460F
82	G/L	AVSS	0.75	CN-JB04F				CN-676M
83	O/W	AVSS	0.75	CN-305M				CN-241F
84	Y	AVSS	0.75	CN-305M				CN-235F
142	Y	AVSS	0.75	CN-301M				CN-34F
144	R/Y	AVSS	0.75	CN-301M				CN-34F
150	Br	AVSS	0.75	CN-30F				JS-B100
150	Br	AVSS	0.75	CN-305M				JS-B100
150	Br	AVSS	0.75	CN-405M				JS-B100

WIRE NO.	WIRE COLOR	WIRE TYPE	SIZE	FROM	2WIRE CONNECT NO.	CONNECTION	2WIRE CONNECT NO.	T 0
191	G	AVSS	0.75	CN-301M				CN-30F
192	W/L	AVSS	0.75	CN-301M				CN-35F
193	B/Y	AVSS	0.75	CN-301M				CN-35F
199	P/G	AVSS	0.75	CN-301M				CN-35F
215	W	AVSS	0.75	CN-305M				JS-B106
215	W	AVSS	0.75	CN-405M				JS-B106
215	W	AVSS	0.75	CN-35F				JS-B106
216	B/R	AVSS	0.75	CN-305M				JS-B107
216	B/R	AVSS	0.75	CN-405M				JS-B107
216	B/R	AVSS	0.75	CN-35F				JS-B107
217	Lg/Y	AVSS	0.75	CN-305M				JS-B108
217	Lg/Y	AVSS	0.75	CN-405M				JS-B108
217	Lg/Y	AVSS	0.75	CN-35F				JS-B108
218	L/O	AVSS	0.75	CN-305M				JS-B109
218	L/O	AVSS	0.75	CN-405M				JS-B109
218	L/O	AVSS	0.75	CN-35F				JS-B109
219	Y/B	AVSS	0.75	CN-305M				JS-B110
219	Y/B	AVSS	0.75	CN-405M				JS-B110
219	Y/B	AVSS	0.75	CN-35F				JS-B110
220	G/Y	AVSS	0.75	CN-305M				JS-B111
220	G/Y	AVSS	0.75	CN-405M				JS-B111
220	G/Y	AVSS	0.75	CN-35F				JS-B111
221	P/B	AVSS	0.75	CN-305M				JS-B112
221	P/B	AVSS	0.75	CN-405M				JS-B112
221	P/B	AVSS	0.75	CN-35F				JS-B112
222	P/W	AVSS	0.75	CN-300M				CN-34F
223	Y/G	AVSS	0.75	CN-35F				CN-301M
248	G	AVSS	0.75	CN-433F				CN-301M
249	L	AVSS	0.75	CN-433F				CN-301M
300	Y	AVSS	0.75	CN-236F				CN-260F
312	R/B	AVSS	0.75	CN-463F				CN-302M
313	W/B	AVSS	0.75	CN-463F				CN-302M
314	P/W	AVSS	0.75	CN-463F				CN-302M
315	P/L	AVSS	0.75	CN-302M				CN-462F
316	W/G	AVSS	0.75	CN-302M				CN-462F
317	L/Y	AVSS	0.75	CN-302M				CN-462F
321	B/L	AVSS	0.75	CN-461F				CN-302M
322	Y/B	AVSS	0.75	CN-302M				CN-461F
323	Br/W	AVSS	0.75	CN-302M				CN-461F
327	R/W	AVSS	0.75	CN-457F				CN-302M
328	L/G	AVSS	0.75	CN-302M				CN-457F
329	Y/G	AVSS	0.75	CN-302M				CN-457F
334	Y/L	AVSS	0.75	CN-302M				CN-480F
335	Br/B	AVSS	0.75	CN-302M				CN-480F
336	Lg/R	AVSS	0.75	CN-302M				CN-480F
347	Y/V	AVSS	0.75	CN-304M				CN-402M
359	L/Y	AVSS	0.75	CN-303M				CN-891F
365	L/R	AVSS	0.75	CN-303M				CN-402M
366	G/B	AVSS	0.75	CN-402M				CN-304M
369	P/B	AVSS	0.75	CN-303M				CN-485F
381	O/W	AVSS	0.75	CN-302M				CN-456M
382	L/W	AVSS	0.75	CN-455M				CN-302M
395	R/L	AVSS	0.75	CN-305M			DS-B41	CN-458F
395	R/L	AVSS	0.75	CN-35F			DS-B41	CN-458F
398	G/W	AVSS	0.75	JS-B101				CN-303M
398	G/W	AVSS	0.75	JS-B101				CN-452F
398	G/W	AVSS	0.75	JS-B101				CN-402M
400	R/Y	AVSS	0.75	CN-239F			DS-B23	CN-522F
400	R/Y	AVSS	0.75	CN-303M			DS-B23	CN-522F
401	Gr/B	AVSS	0.75	CN-303M				CN-36F
406	P	AVSS	0.75	CN-454M				CN-303M
407	Br	AVSS	0.75	CN-453M				CN-303M
409	R/Y	AVSS	0.75	CN-300M				CN-261F
410	Br/L	AVSS	0.75	JS-B105				CN-459F
410	Br/L	AVSS	0.75	JS-B105				CN-460F
410	Br/L	AVSS	0.75	JS-B105				CN-303M
410	Br/L	AVSS	0.75	JS-B105				CN-34F
413	P	AVSS	0.75	CN-304M				CN-236F
419	G/Y	AVSS	0.75	CN-30F				CN-303M
420	Y/W	AVSS	0.75	CN-304M				CN-30F
421	R/Y	AVSS	0.75	CN-304M				CN-35F
422	P/L	AVSS	0.75	CN-304M				CN-35F
423	W/B	AVSS	0.75	CN-304M				CN-36F
424	L/G	AVSS	0.75	CN-304M				JS-B37
424	L/G	AVSS	0.75	JS-B37				CN-30F
424	L/G	AVSS	0.75	CN-676M				JS-B37
425	Y/L	AVSS	0.75	CN-304M				JS-B38
425	Y/L	AVSS	0.75	JS-B38				CN-30F
425	Y/L	AVSS	0.75	CN-676M				JS-B38
426	Gr/L	AVSS	0.75	CN-304M				JS-B39
426	Gr/L	AVSS	0.75	JS-B39				CN-34F
426	Gr/L	AVSS	0.75	JS-B39				CN-676M
427	R/W	AVSS	0.75	CN-304M				JS-B40
427	R/W	AVSS	0.75	JS-B40				CN-34F
427	R/W	AVSS	0.75	CN-676M				JS-B40
428	Gr/W	AVSS	0.75	CN-304M				CN-30F
430	Br/Y	AVSS	0.75	CN-34F				CN-304M

WIRE NO.	WIRE COLOR	WIRE TYPE	SIZE	FROM	2WIRE CONNECT NO.	CONNECTION	2WIRE CONNECT NO.	T 0
431	R/G	AVSS	0.75	JS-B41				CN-304M
431	R/G	AVSS	0.75	JS-B41				CN-34F
431	R/G	AVSS	0.75	CN-676M				JS-B41
432	O/W	AVSS	0.75	JS-B42				CN-304M
432	O/W	AVSS	0.75	JS-B42				CN-34F
432	O/W	AVSS	0.75	JS-B42				CN-676M
433	P/G	AVSS	0.75	CN-302M				CN-676M
434	G/B	AVSS	0.75	CN-30F				CN-676M
436	W/Y	AVSS	0.75	CN-30F				CN-304M
437	O	AVSS	0.75	JS-B35				CN-304M
437	O	AVSS	0.75	CN-30F				JS-B35
437	O	AVSS	0.75	CN-30F				JS-B35
440	W/R	AVSS	0.75	CN-304M				JS-B34
440	W/R	AVSS	0.75	JS-B34				CN-30F
440	W/R	AVSS	0.75	JS-B34				CN-676M
443	O/L	AVSS	0.75	CN-34F				CN-303M
446	G	AVSS	0.75	CN-303M				CN-235F
447	P	AVSS	0.75	CN-304M				CN-30F
449	Br/L	AVSS	0.75	CN-36F				CN-303M
450	P/G	AVSS	0.75	CN-303M				CN-36F
451	L/B	AVSS	0.75	CN-303M				CN-35F
452	O/B	AVSS	0.75	CN-303M				CN-36F
454	R/Y	AVSS	0.75	CN-305M				CN-490F
457	W/Y	AVSS	0.75	CN-36F				CN-261F
458	L/B	AVSS	0.75	CN-676M				CN-JB13F
458	L/B	AVSS	0.75	CN-300M				CN-JB13F
458	L/B	AVSS	0.75	CN-249F				CN-JB13F
458	L/B	AVSS	0.75	CN-260F				CN-JB13F
459	Lg	AVSS	0.75	CN-239F				CN-303M
461	Y/B	AVSS	0.75	CN-30F				CN-456M
462	G/O	AVSS	0.75	CN-455M				CN-30F
464	P	AVSS	0.75	CN-526F	DS-B32			CN-35F
464	P	AVSS	0.75	CN-526F	DS-B32			CN-484F
465	Gr	AVSS	0.75	CN-36F				CN-465F
466	G/W	AVSS	0.75	CN-30F				CN-677F
467	P/W	AVSS	0.75	CN-30F				CN-677F
469	L	AVSS	0.75	CN-301M				CN-492F
474	L/B	AVSS	0.75	CN-34F				CN-303M
475	G	AVSS	0.75	CN-36F				CN-464F
478	G/Y	AVSS	0.75	CN-490F				CN-476F
479	O/B	AVSS	0.75	CN-431F				CN-30F
480	Br/B	AVSS	0.75	CN-430F				CN-30F
487	Y/W	AVSS	0.75	CN-677F				CN-485F
754	Y/R	AVSS	0.75	CN-35F				CN-300M
811	R/W	AVS	1.25	CN-677F				CN-481F
812	P/L	AVSS	0.75	CN-677F				CN-881F
813	P	AVS	1.25	CN-881F				CN-677F
814	Y	AVSS	0.75	CN-889F				CN-891F
815	G	AVSS	0.75	CN-889F				CN-891F
831	G/Y	AVSS	0.75	CN-482F				CN-483F
832	L/W	AVSS	0.75	CN-482F				CN-483F
833	L/R	AVSS	0.75	CN-482F				CN-483F
834	Y/W	AVSS	0.75	CN-482F				CN-483F
835	Y/R	AVSS	0.75	CN-482F				CN-483F
836	G/W	AVSS	0.75	CN-482F				CN-483F
837	G/R	AVSS	0.75	CN-482F				CN-483F
838	L/Y	AVSS	0.75	CN-482F				CN-483F
839	B/G	AVSS	0.75	CN-482F				CN-484F
840	L/G	AVSS	0.75	CN-482F				CN-484F
841	L	AVSS	0.75	CN-484F				CN-482F
842	G	AVSS	0.75	CN-483F				CN-482F
843	Y	AVSS	0.75	CN-483F				CN-482F
844	G/L	AVSS	0.75	CN-483F				CN-482F
845	Y/L	AVSS	0.75	CN-483F				CN-482F
846	R/B	AVSS	0.75	CN-483F				CN-481F
847	R/L	AVS	0.85	CN-483F				CN-481F
848	Br/Y	AVSS	0.75	CN-483F				CN-481F
849	Br/W	AVSS	0.75	CN-481F				CN-483F
858	Br/G	AVSS	0.75	CN-300M				CN-34F
922	Br/W	AVSS	0.75	CN-34F				CN-300M
944	Br	AVSS	0.75	CN-34F				CN-677F
951	O	AVSS	0.75	CN-890F				CN-305M
959	L	AVSS	0.75	CN-36F				CN-402M
962	L/G	AVSS	0.75	CN-890F				CN-303M
966	W/O	AVSS	0.75	CN-36F				CN-301M
984	O	AVSS	0.75	CN-882F	DS-B206			CN-484F
984	O	AVS	1.25	CN-882F	DS-B206			JS-B102
984	O	AVS	1.25	CN-481F				JS-B102
984	O	AVS	1.25	CN-481F				JS-B102
985	R/W	AVSS	0.75	CN-30F				CN-402M
987	L/O	AVSS	0.75	CN-677F				CN-300M

WIRE NO.	WIRE COLOR	WIRE TYPE	SIZE	FROM	2WIRE CONNECT NO.	CONNECTION	2WIRE CONNECT NO.	T 0
983	P/G	AVSS	0.75	CN-30F				CN-235F
983	P/G	AVSS	0.75	CN-882F				CN-235F
983	P/G	AVSS	0.75	CN-882F			DS-01	CN-241F
983	P/G	AVSS	0.75	CN-242F	DS-02		DS-01	CN-241F
983	P/G	AVSS	0.75	CN-242F	DS-02			CN-243F
A23	L	AVSS	0.75	CN-406F				CN-250F
A24	Sb	AVSS	0.75	CN-406F				CN-250F
A25	P	AVSS	0.75	CN-406F				CN-250F
A26	R	AVSS	0.75	CN-406F				CN-250F
A27	W	AVSS	0.75	CN-406F				CN-250F
A28	B	AVSS	0.75	CN-406F				CN-250F
A29	Y	AVSS	0.75	CN-406F				CN-250F
A30	G	AVSS	0.75	CN-406F				CN-250F
A31	W/Y	AVSS	0.75	CN-406F				CN-250F
A32	R	AVSS	0.75	CN-406F				CN-660F
A33	G/W	AVSS	0.75	CN-660F				CN-250F
A38	Y	AVSS	0.75	CN-249F				CN-249F
A39	G	AVSS	0.75	CN-249F				CN-249F
119	Y	AVSS	0.75	CN-JB17F				CN-300M
120	L	AVSS	0.75	CN-JB17F				CN-300M
119	Y	AVSS	0.75	CN-JB17F				CN-676M
120	L	AVSS	0.75	CN-JB17F				CN-676M
119	Y	AVSS	0.75	CN-JB17F				CN-405M
120	L	AVSS	0.75	CN-JB17F				CN-405M
119	Y	AVSS	0.75	CN-JB17F				CN-486F
120	L	AVSS	0.75	CN-JB17F				CN-486F
119	Y	AVSS	0.75	CN-JB17F				CN-249F
120	L	AVSS	0.75	CN-JB17F				CN-249F
378	P/W	AVSS	0.75	CN-301M				CN-451F
379	Y/G	AVSS	0.75	CN-301M				CN-451F
388	B/Y	AVSS	0.75	CN-467F			DS-B30	CN-466F
388	B/Y	AVSS	0.75	CN-301M			DS-B30	CN-466F
389	G/R	AVSS	0.75	CN-301M			DS-B31	CN-466F
389	G/R	AVSS	0.75	CN-467F			DS-B31	CN-466F
390	L/O	AVSS	0.75	CN-469F			DS-B28	CN-468F
390	L/O	AVSS	0.75	CN-301M			DS-B28	CN-468F
391	Br	AVSS	0.75	CN-301M			DS-B29	CN-468F
391	Br	AVSS	0.75	CN-469F			DS-B29	CN-468F
488	P/G	AVSS	0.75	CN-34F				CN-301M
489	G	AVSS	0.75	CN-34F				CN-301M
490	P/L	AVSS	0.75	CN-34F				CN-300M
491	Gr/W	AVSS	0.75	CN-34F				CN-300M
492	R/B	AVSS	0.75	CN-34F				CN-300M
493	W/Y	AVSS	0.75	CN-34F				CN-300M
A19	Y/R	AVSS	0.75	CN-677F				CN-250F
A20	Y/L	AVSS	0.75	CN-677F				CN-250F
A21	B/W	AVSS	0.75	CN-677F				CN-250F
A22	L/W	AVSS	0.75	CN-677F				CN-250F
A41	B	AVSS	0.75	CN-305M				CN-250F
A42	W/L	AVSS	0.75	CN-305M				CN-250F
A56	Br	AVSS	0.75	CN-406F				CN-JB13F
A57	R/W	AVSS	0.75	CN-406F				CN-JB13F
A56	Br	AVSS	0.75	CN-249F				CN-JB13F
A57	R/W	AVSS	0.75	CN-249F				CN-JB13F
A56	Br	AVSS	0.75	CN-677F				CN-JB13F
A57	R/W	AVSS	0.75	CN-677F				CN-JB13F
E0	B	AVSS	1.25	CN-300M			DS-B68	LA-B18
E0	B	AVSS	1.25	CN-304M			DS-B68	LA-B18
E08	B	AVSS	0.75	CN-243F				CN-242F
E08	B	AVSS	0.75	CN-241F				CN-242F
E08	B	AVSS	0.75	CN-241F				CN-882F
E08	B	AVSS	0.75	CN-881F				CN-882F
E08	B	AVSS	0.75	CN-881F				CN-485F
E08	B	AVSS	1.25	CN-489F				CN-485F
E08	B	AVSS	1.25	CN-489F				LB-B02
E08	B	AVSS	0.75	CN-433F				LB-B02
E08	B	AVSS	0.75	CN-433F				CN-486F
E013	B	AVSS	0.75	CN-464F				CN-476F
E013	B	AVSS	0.75	LA-B04				CN-476F
E013	B	AVSS	0.75	LA-B04				CN-465F
E025	B	AVSS	1.25	LA-B12	DS-B65			CN-35F
E025	B	AVSS	1.25	LA-B12	DS-B65			CN-35F
E027	B	AVS	0.85	CA-B10				CN-484F
E027	B	AVSS	1.25	CA-B10				LA-B14
E027	B	AVSS	1.25	CN-481F				LA-B14
E028	B	AVSS	0.75	LA-B01	DS-B19			CN-430F
E028	B	AVSS	0.75	LA-B01	DS-B19			CN-431F
E18	B/W	AVSS	1.25	CN-JB14F				CN-406F
E18	B/W	AVSS	0.75	CN-JB14F				CN-249F
E18	B/W	AVSS	0.75	CN-JB14F				CN-249F
E18	B/W	AVSS	0.75	CN-JB14F				CN-249F
E18	B/W	AVSS	0.75	CN-JB14F				CN-JB14F
E18	B/W	AVSS	0.75	CN-249F				CN-JB14F
E18	B/W	AVSS	0.75	CN-249F				CN-JB14F
E18	B/W	AVSS	1.25	CN-406F				CN-JB14F

(6/6)

Retention

2. LOWER

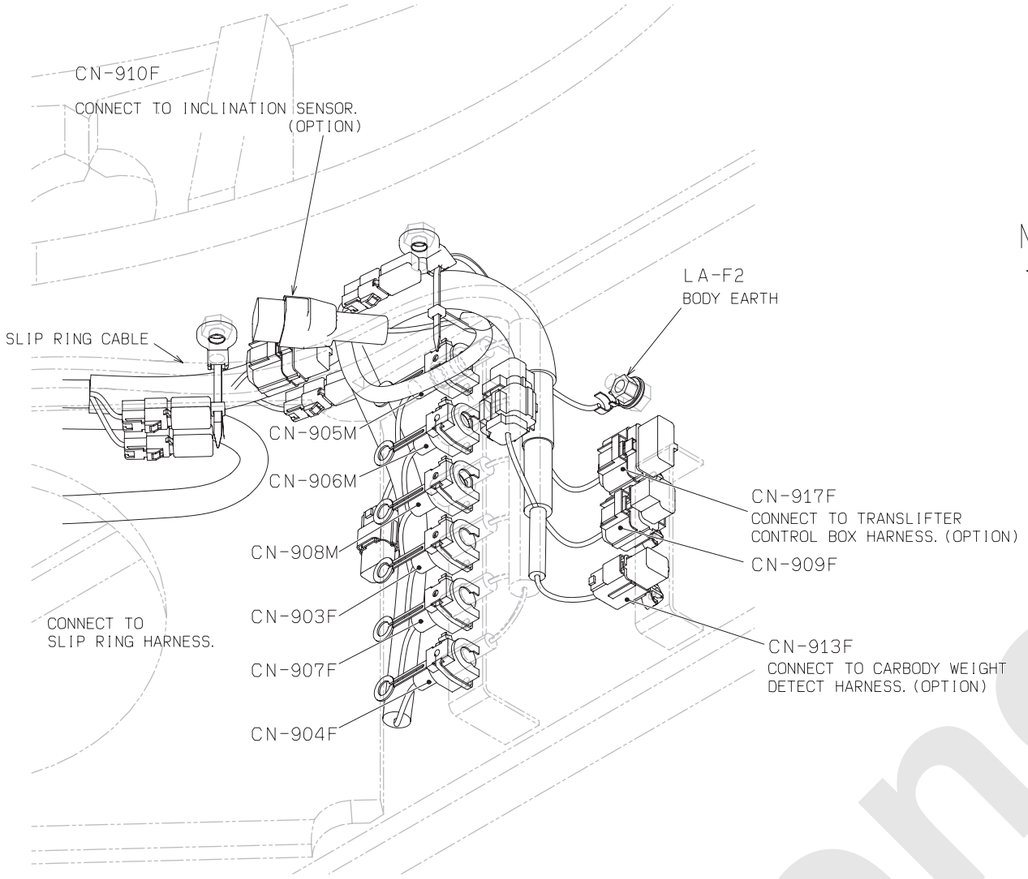

ARROW VIEW A

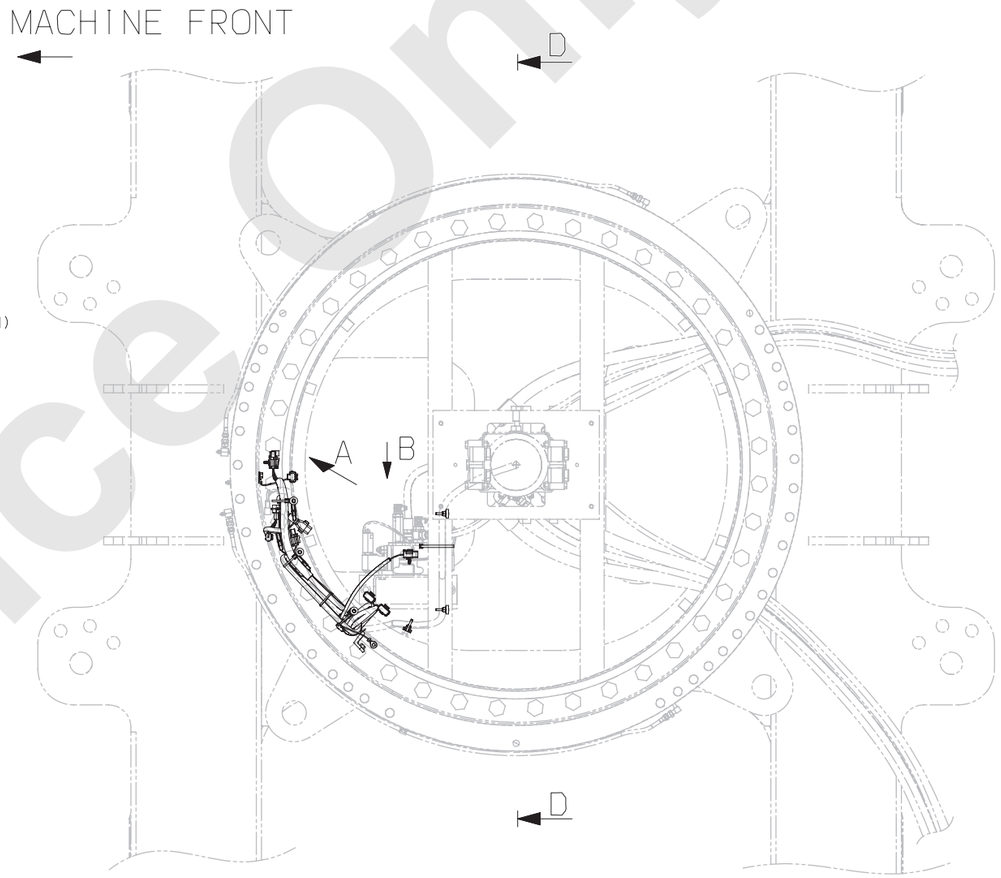

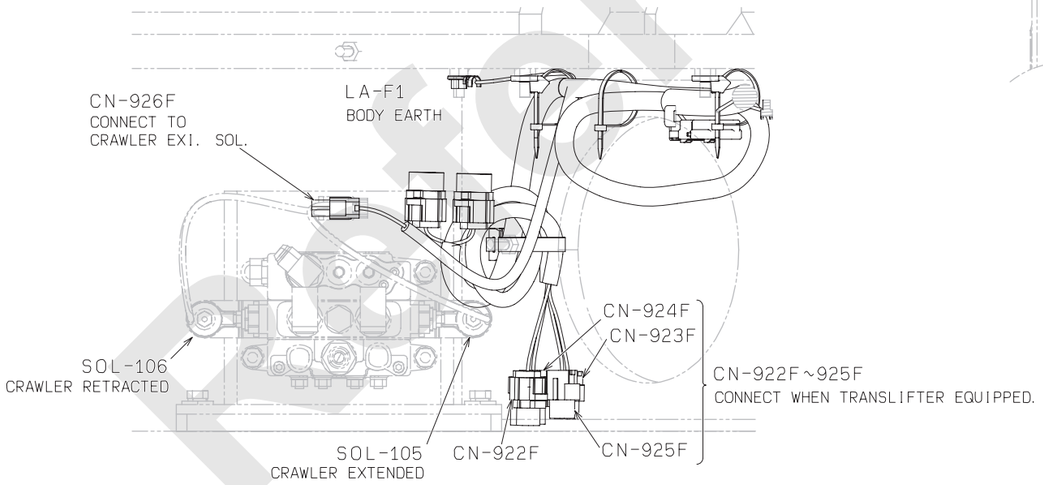

ARROW VIEW B

(1/2)

Reference Only

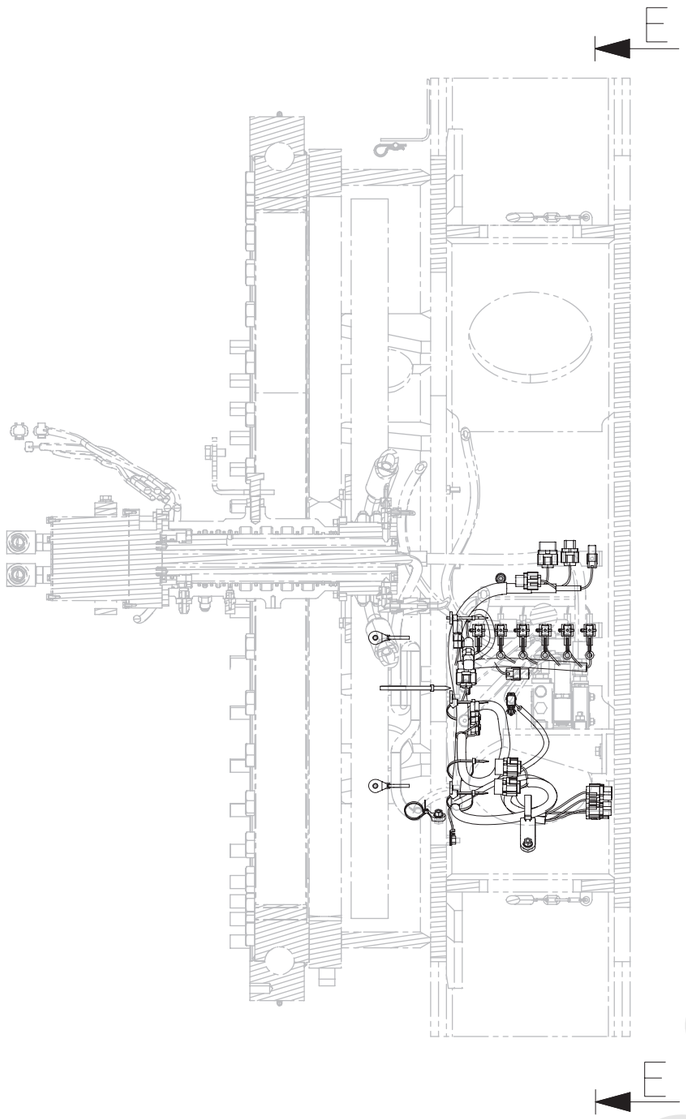

SECTION D-D

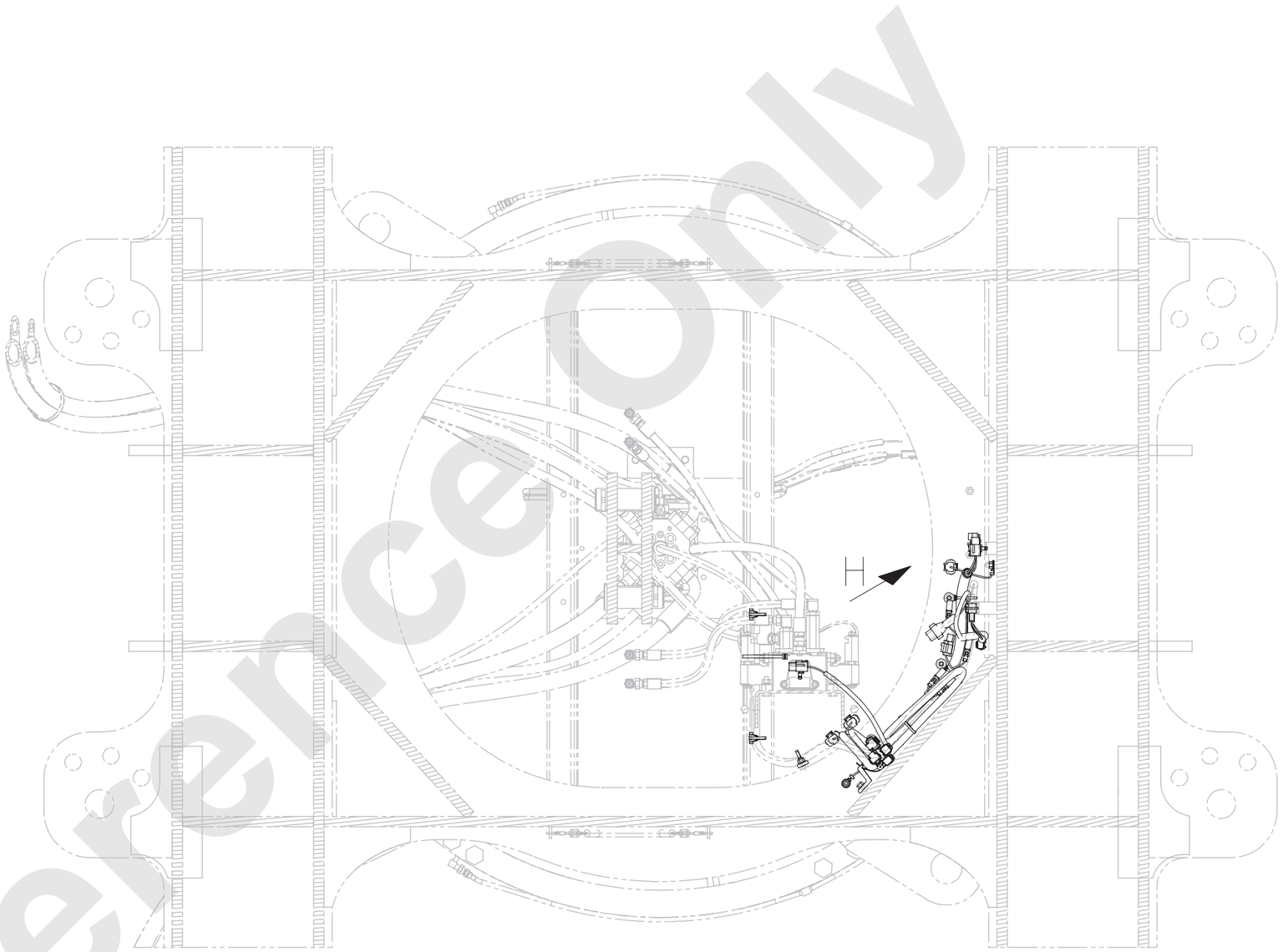

SECTION E-E

Reference Only

(2/2)

LOWER HARNESS

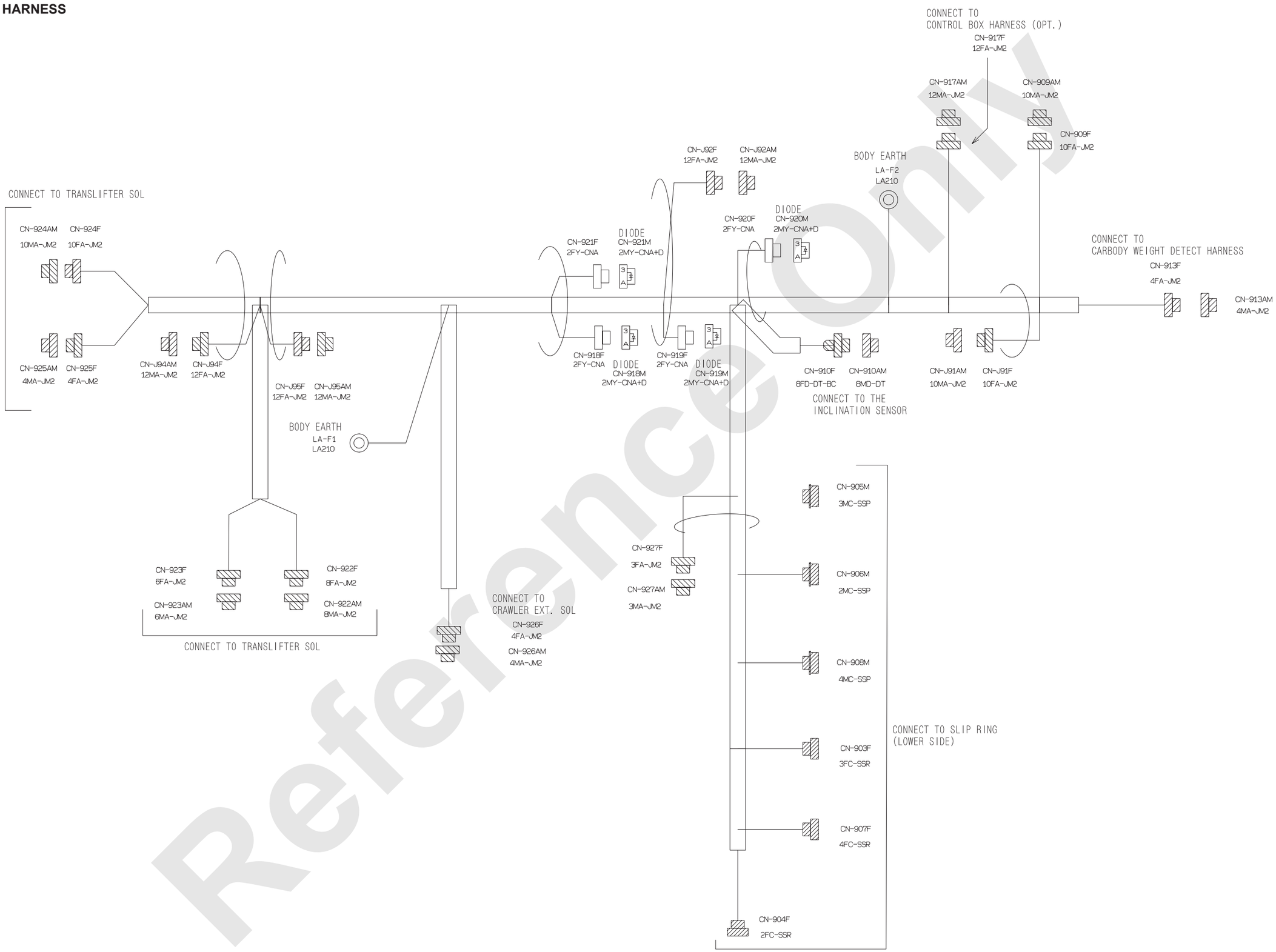

(1/4)

Reference Only

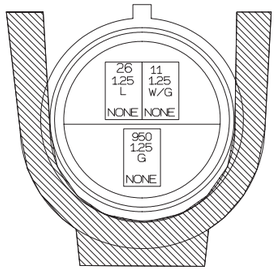

CN-903F
3FC-SSR

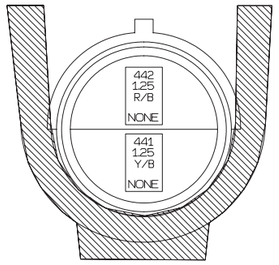

CN-906M
2MC-SSP

SEALING

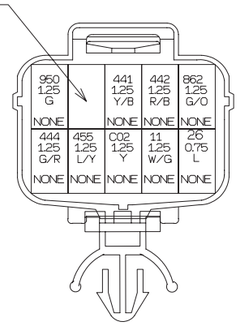

CN-909F
10FA-JM2

INSERT SEALING ON ALL EMPTY PINS

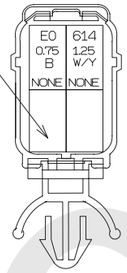

CN-913F
4FA-JM2

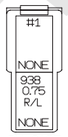

CN-918F
2FY-CNA
#1 905 1.25 L/Y + 905 0.75 L/Y

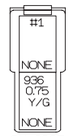

CN-920F
2FY-CNA
#1 904 1.25 Y/G + 904 0.75 Y/G

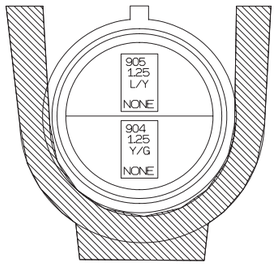

CN-904F
2FC-SSR

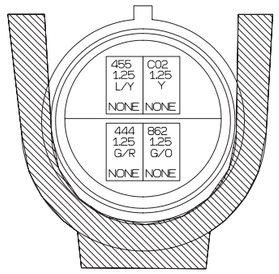

CN-907F
4FC-SSR

INSERT SEALING ON ALL EMPTY PINS

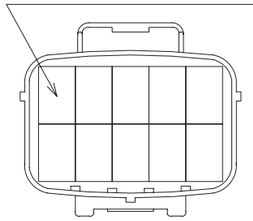

CN-909AM
10MA-JM2

INSERT SEALING ON ALL EMPTY PINS

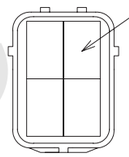

CN-913AM
4MA-JM2

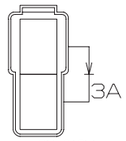

CN-918M
2MY-CNA+D

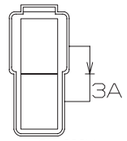

CN-920M
2MY-CNA+D

CN-910F
8FD-DT-BC

INSERT SEALING ON ALL EMPTY PINS

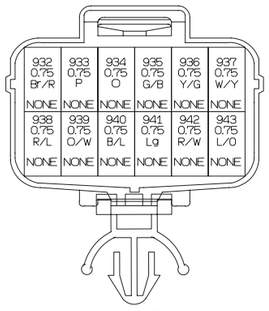

CN-917F
12FA-JM2

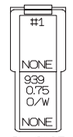

CN-919F
2FY-CNA
#1 905 0.75 L/Y + 905 0.75 L/Y

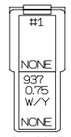

CN-921F
2FY-CNA
#1 904 0.75 Y/G + 904 0.75 Y/G

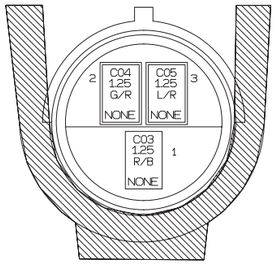

CN-905M
3MC-SSP

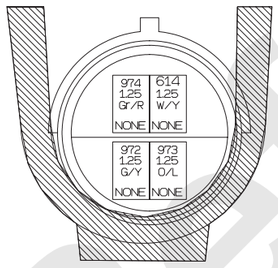

CN-908M
4MC-SSP

INSERT SEALING ON ALL EMPTY PINS

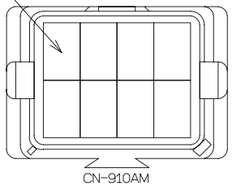

CN-910AM
8MD-DT

INSERT SEALING ON ALL EMPTY PINS

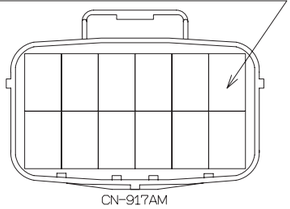

CN-917AM
12MA-JM2

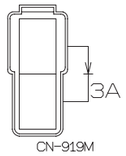

CN-919M
2MY-CNA+D

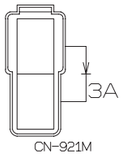

CN-921M
2MY-CNA+D

Reference Only

(2/4)

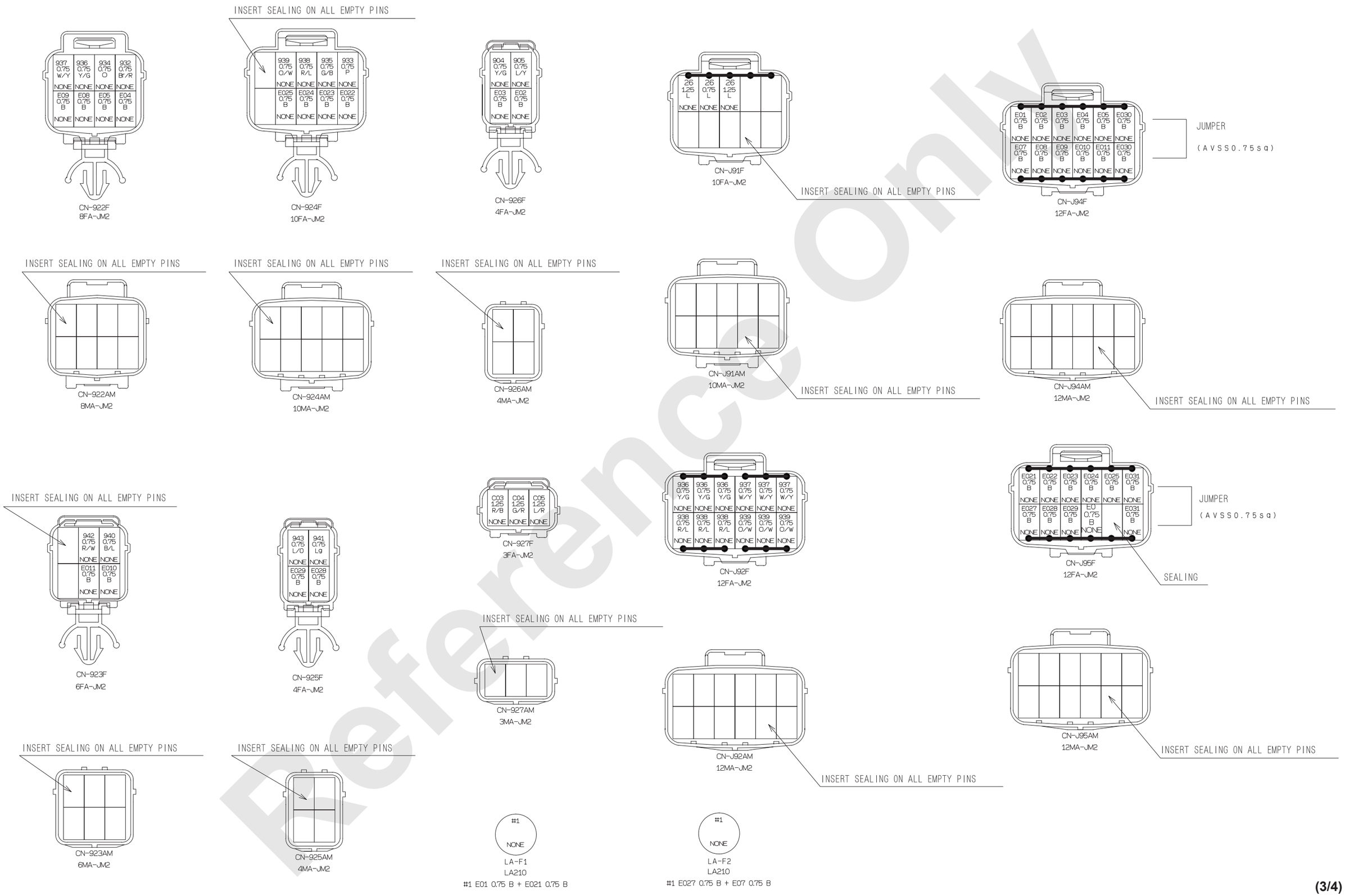

(3/4)

Reference Only

THE WIRE NO./COLOR LIST

WIRE NO.	WIRE COLOR	WIRE TYPE	SIZE	F R O M	※1	CONNECTION	※1	
11	W/G	AVSS	1.25	CN-909F				CN-903F
26	L	AVSS	1.25	CN-J91F				CN-903F
26	L	AVSS	1.25	CN-J91F				CN-910F
26	L	AVSS	0.75	CN-J91F				CN-909F
441	Y/B	AVSS	1.25	CN-906M				CN-909F
442	R/B	AVSS	1.25	CN-906M				CN-909F
444	G/R	AVSS	1.25	CN-907F				CN-909F
455	L/Y	AVSS	1.25	CN-907F				CN-909F
614	W/Y	AVSS	1.25	CN-913F				CN-908M
862	G/O	AVSS	1.25	CN-907F				CN-909F
904	Y/G	AVSS	1.25	CN-904F			DS3	CN-920F
904	Y/G	AVSS	0.75	CN-921F	DS4		DS3	CN-920F
904	Y/G	AVSS	0.75	CN-921F	DS4			CN-926F
905	L/Y	AVSS	1.25	CN-904F			DS1	CN-918F
905	L/Y	AVSS	0.75	CN-919F	DS2		DS1	CN-918F
905	L/Y	AVSS	0.75	CN-919F	DS2			CN-926F
932	Br/R	AVSS	0.75	CN-917F				CN-922F
933	P	AVSS	0.75	CN-917F				CN-924F
934	O	AVSS	0.75	CN-917F				CN-922F
935	G/B	AVSS	0.75	CN-917F				CN-924F
936	Y/G	AVSS	0.75	CN-J92F				CN-917F
936	Y/G	AVSS	0.75	CN-J92F				CN-920F
936	Y/G	AVSS	0.75	CN-J92F				CN-922F
937	W/Y	AVSS	0.75	CN-J92F				CN-917F
937	W/Y	AVSS	0.75	CN-J92F				CN-921F
937	W/Y	AVSS	0.75	CN-J92F				CN-922F
938	R/L	AVSS	0.75	CN-J92F				CN-917F
938	R/L	AVSS	0.75	CN-J92F				CN-918F
938	R/L	AVSS	0.75	CN-J92F				CN-924F
939	O/W	AVSS	0.75	CN-J92F				CN-917F
939	O/W	AVSS	0.75	CN-J92F				CN-919F
939	O/W	AVSS	0.75	CN-J92F				CN-924F
940	B/L	AVSS	0.75	CN-917F				CN-923F
941	Lg	AVSS	0.75	CN-917F				CN-925F
942	R/W	AVSS	0.75	CN-917F				CN-923F
943	L/O	AVSS	0.75	CN-917F				CN-925F
950	G	AVSS	1.25	CN-909F				CN-903F
972	G/Y	AVSS	1.25	CN-910F				CN-908M
973	O/L	AVSS	1.25	CN-910F				CN-908M
974	Gr/R	AVSS	1.25	CN-910F				CN-908M
C02	Y	AVSS	1.25	CN-907F				CN-909F
C03	R/B	AVSS	1.25	CN-905M				CN-927F
C04	G/R	AVSS	1.25	CN-905M				CN-927F
C05	L/R	AVSS	1.25	CN-905M				CN-927F
E01	B	AVSS	0.75	CN-J94F			DS5	LA-F1
E02	B	AVSS	0.75	CN-J94F				CN-926F
E03	B	AVSS	0.75	CN-J94F				CN-926F
E04	B	AVSS	0.75	CN-J94F				CN-922F
E05	B	AVSS	0.75	CN-J94F				CN-922F
E030	B	AVSS	0.75	CN-J94F				CN-J94F
E07	B	AVSS	0.75	LA-F2	DS6			CN-J94F
E08	B	AVSS	0.75	CN-922F				CN-J94F
E09	B	AVSS	0.75	CN-922F				CN-J94F
E010	B	AVSS	0.75	CN-923F				CN-J94F
E011	B	AVSS	0.75	CN-923F				CN-J94F
E021	B	AVSS	0.75	CN-J95F			DS5	LA-F1
E022	B	AVSS	0.75	CN-J95F				CN-924F
E023	B	AVSS	0.75	CN-J95F				CN-924F
E024	B	AVSS	0.75	CN-J95F				CN-924F
E025	B	AVSS	0.75	CN-J95F				CN-924F
E031	B	AVSS	0.75	CN-J95F				CN-J95F
E027	B	AVSS	0.75	LA-F2	DS6			CN-J95F
E028	B	AVSS	0.75	CN-925F				CN-J95F
E029	B	AVSS	0.75	CN-925F				CN-J95F
E0	B	AVSS	0.75	CN-913F				CN-J95F

※1 TWO WIRE CONNECT NUMBER

Reference Only

(4/4)

3. UPPER

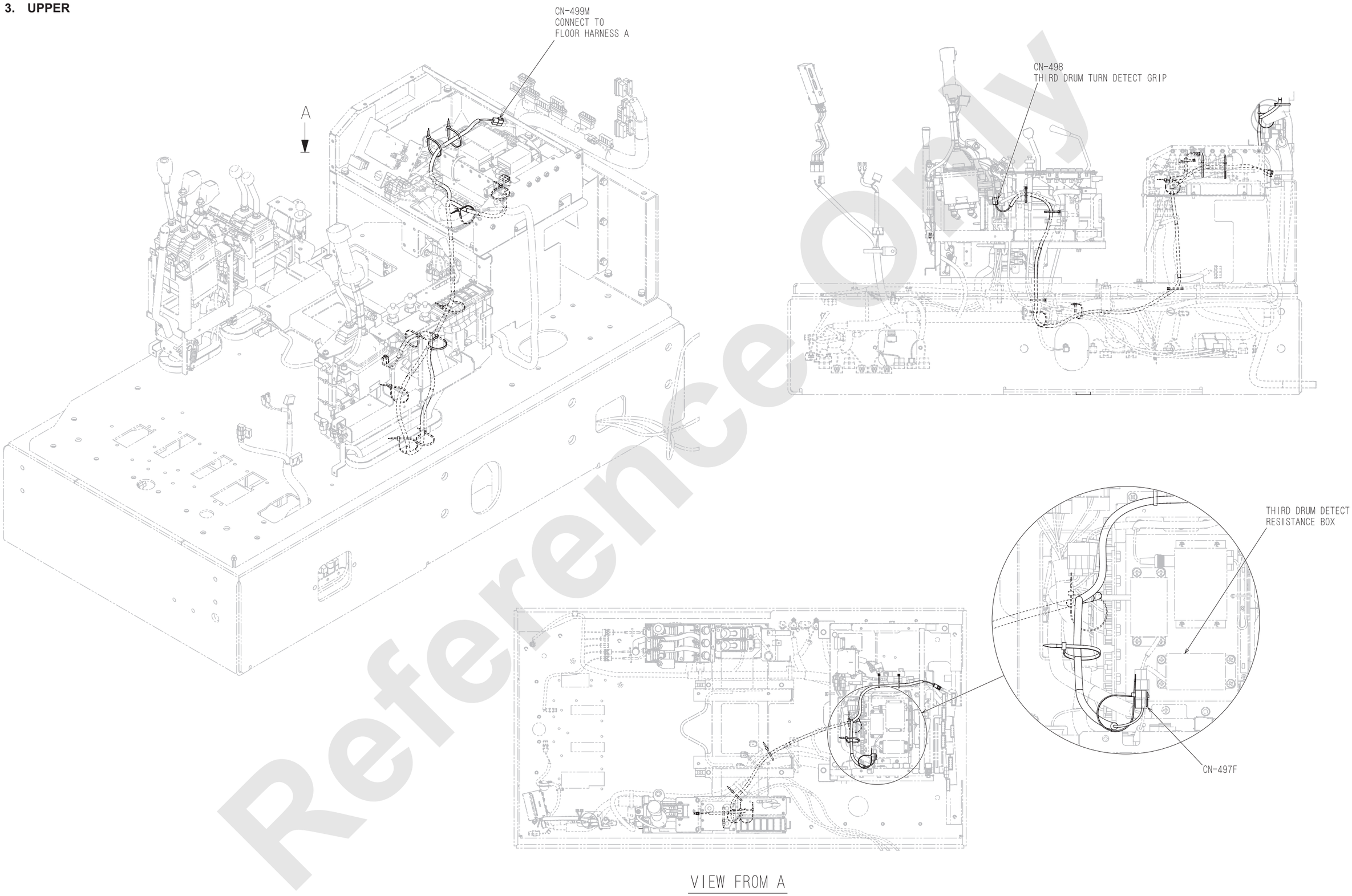

Reference Only

UPPER HARNESS

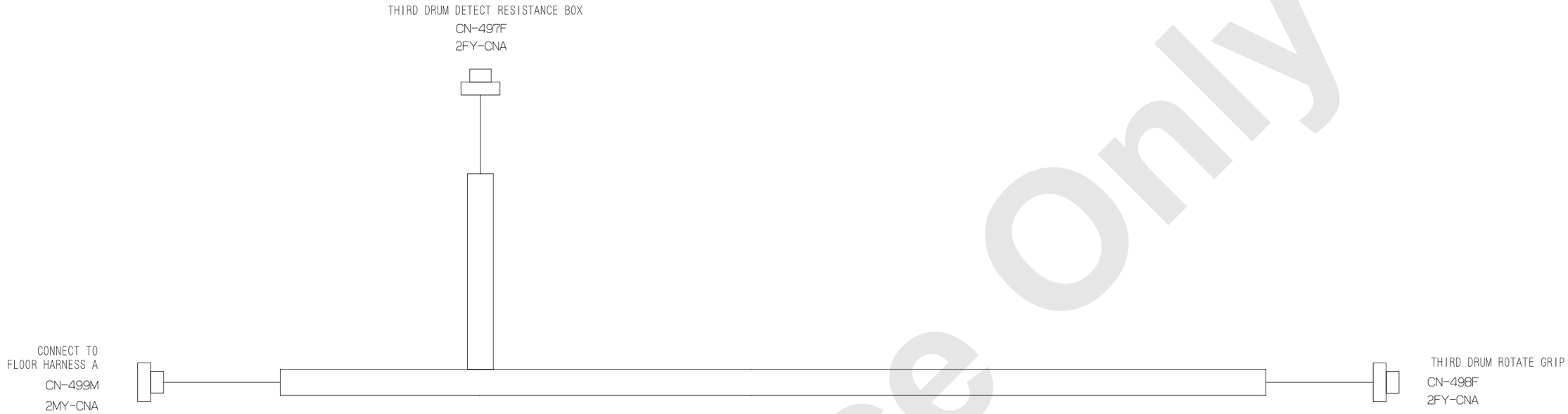

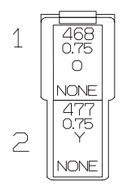

CN-497F
2FY-CNA

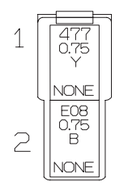

CN-498F
2FY-CNA

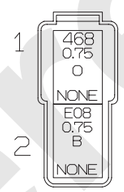

CN-499M
2MY-CNA

THE WIRE NO./COLOR LIST

WIRE NO.	WIRE COLOR	WIRE TYPE	SIZE	F R O M	※1	CONNECTION	※1	T O
468	O	AVSS	0.75	CN-499M		————		CN-497F
477	Y	AVSS	0.75	CN-497F		————		CN-498F
E08	B	AVSS	0.75	CN-499M		————		CN-498F

※1 TWO WIRE CONNECT NUMBER

Reference Only

4. LEFT DECK

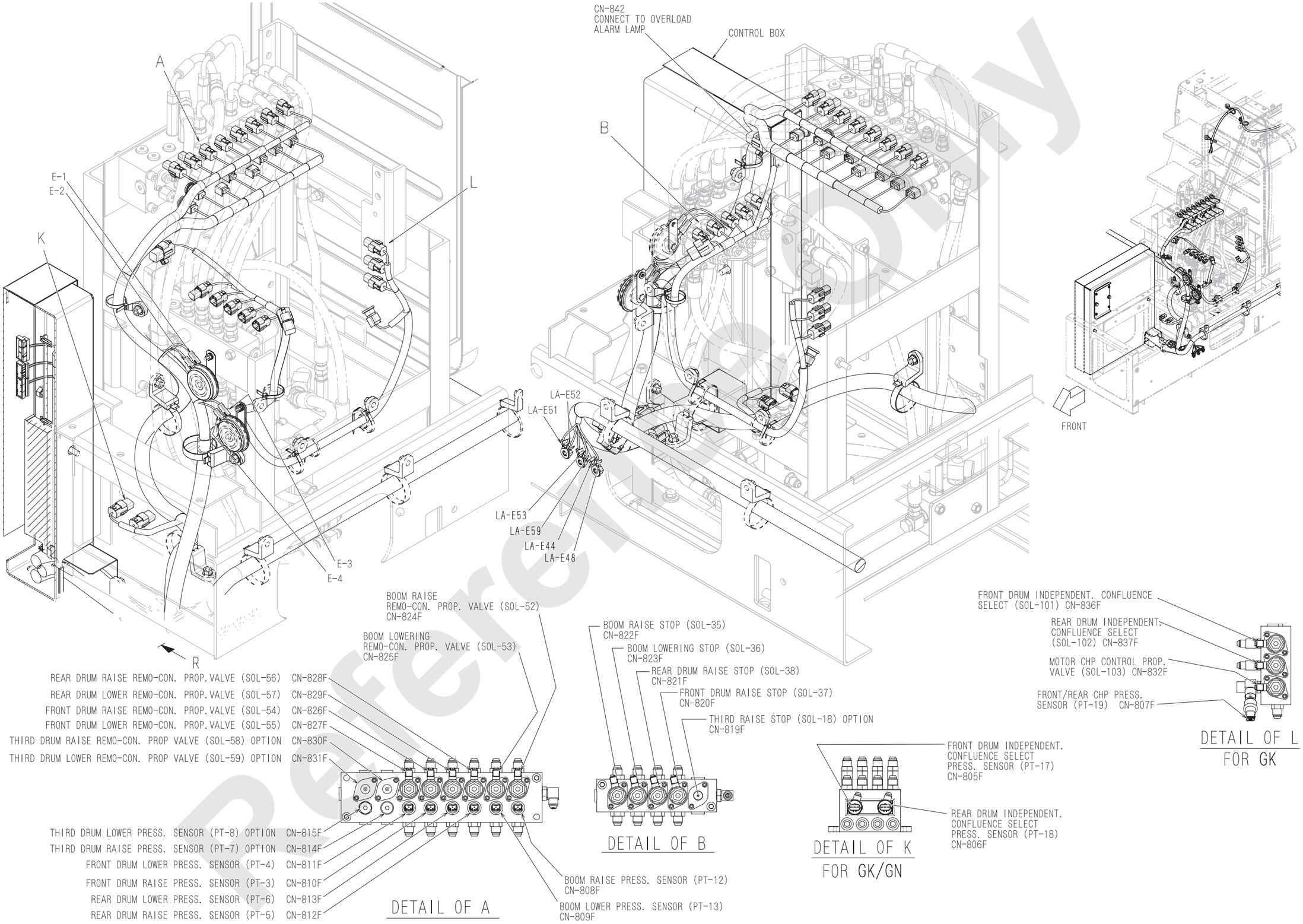

(1/7)

Reference Only

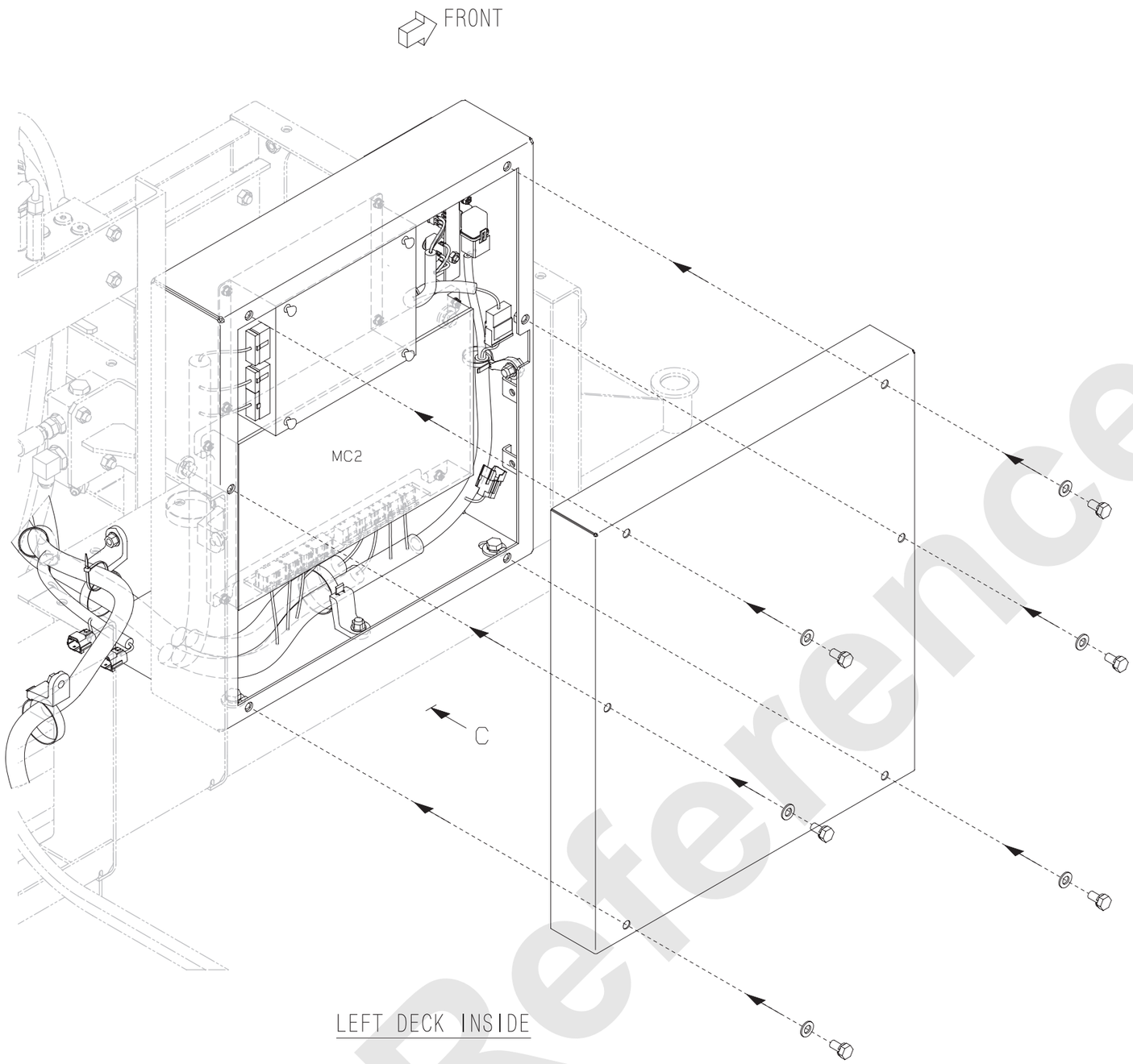

LEFT DECK INSIDE

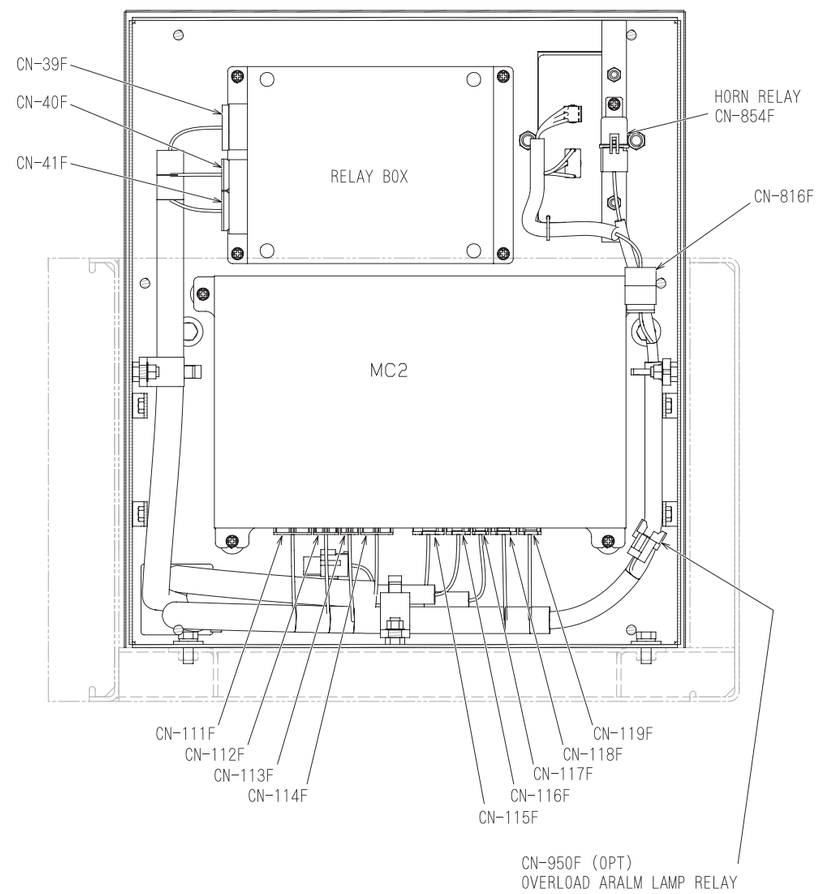

VIEW FROM C

(2/7)

Reference Only

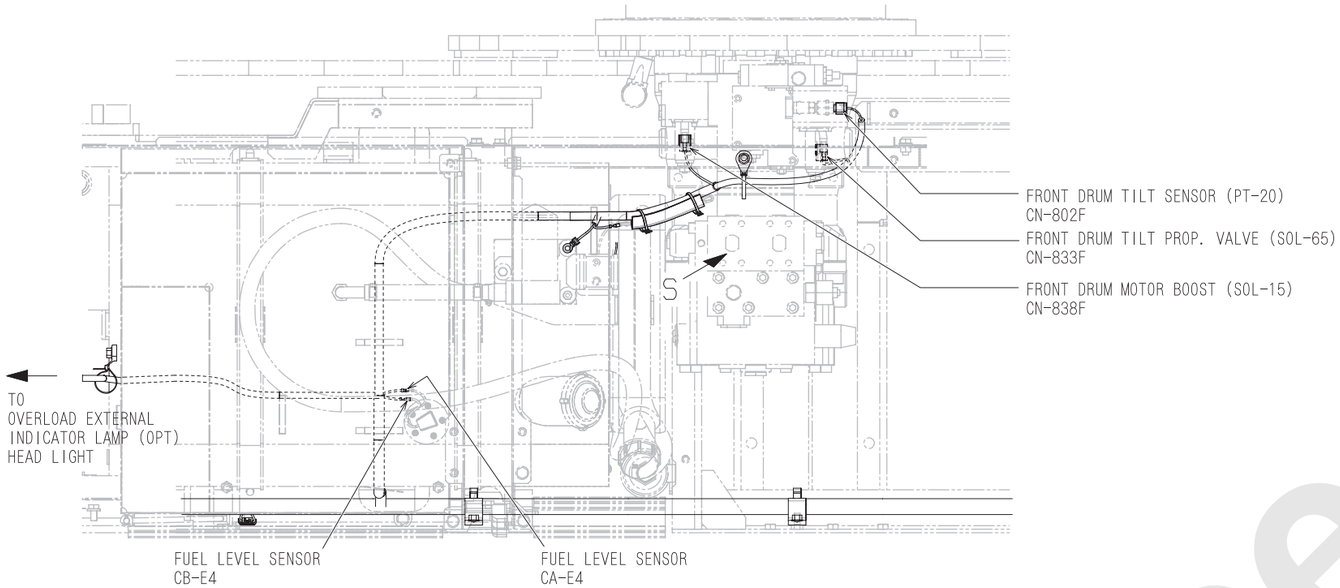

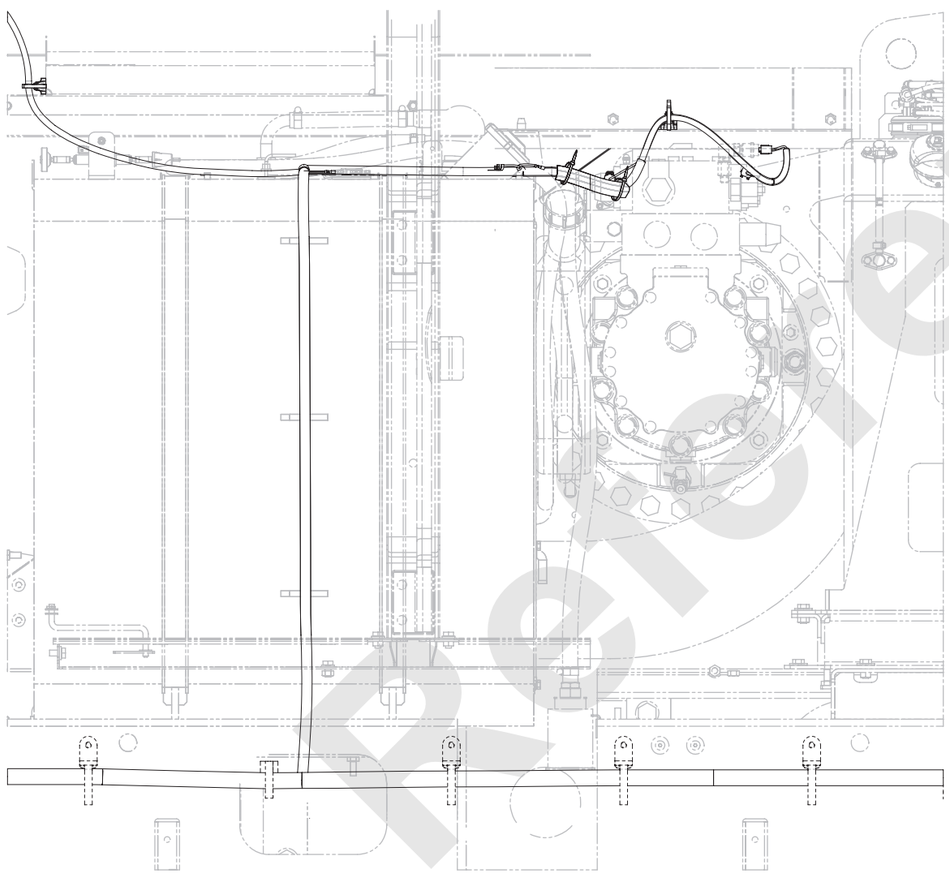

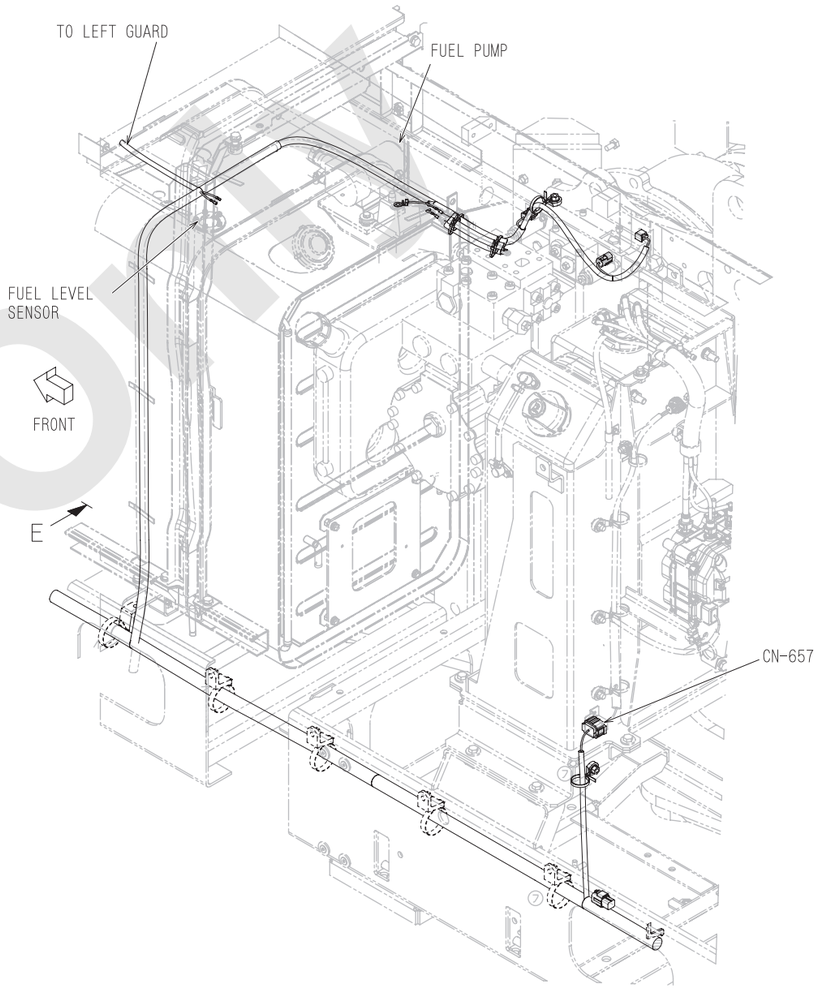

LEFT REAR VIEW OF LEFT DECK CENTER
FUEL TANK AND FRONT DRUM MOTOR AREA

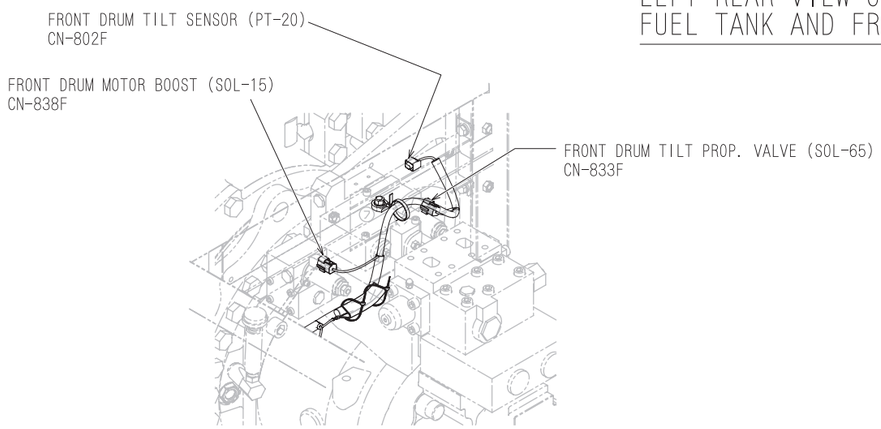

VIEW FROM S

Reference Only

(3/7)

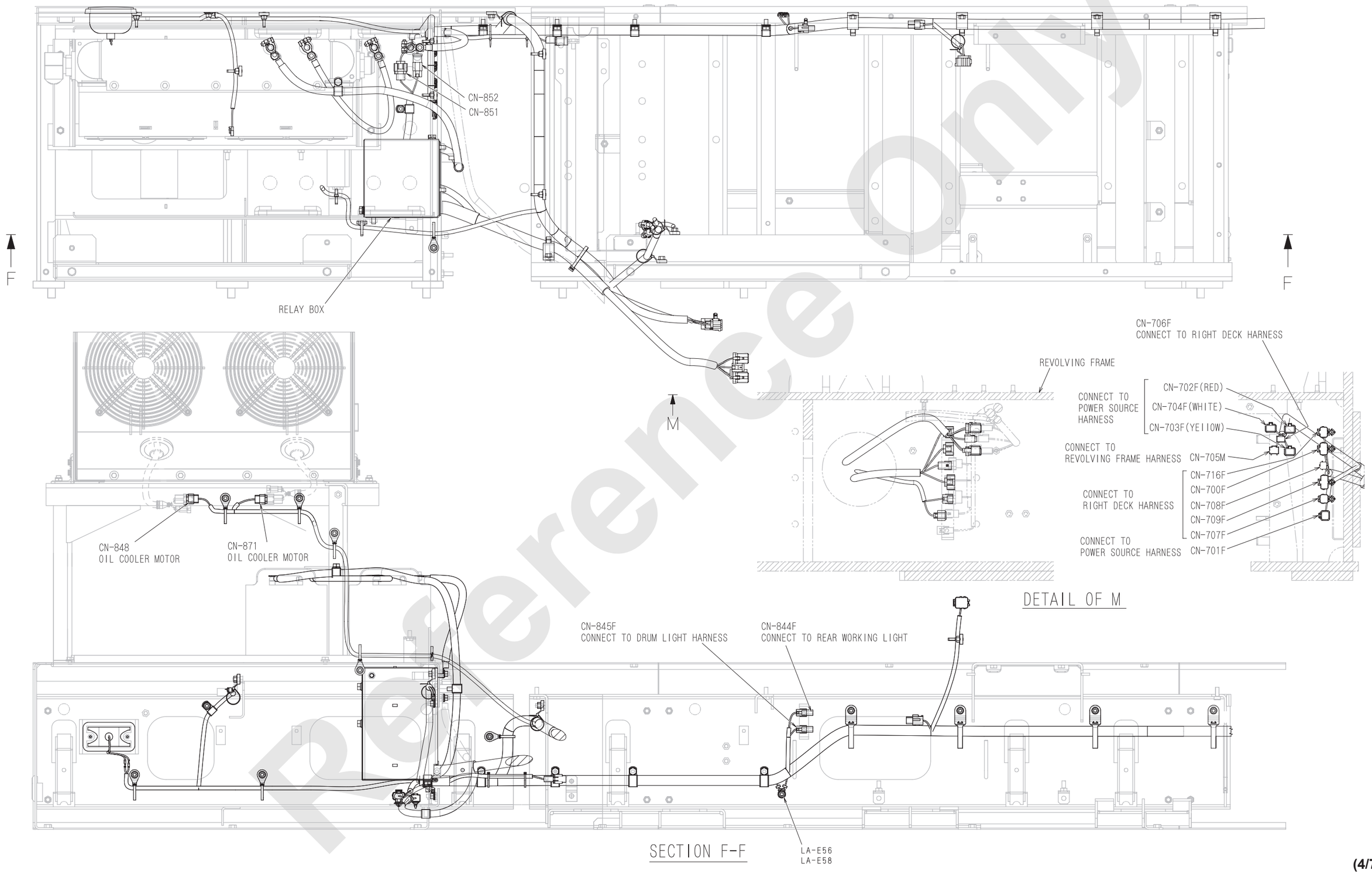

Reference Only

(4/7)

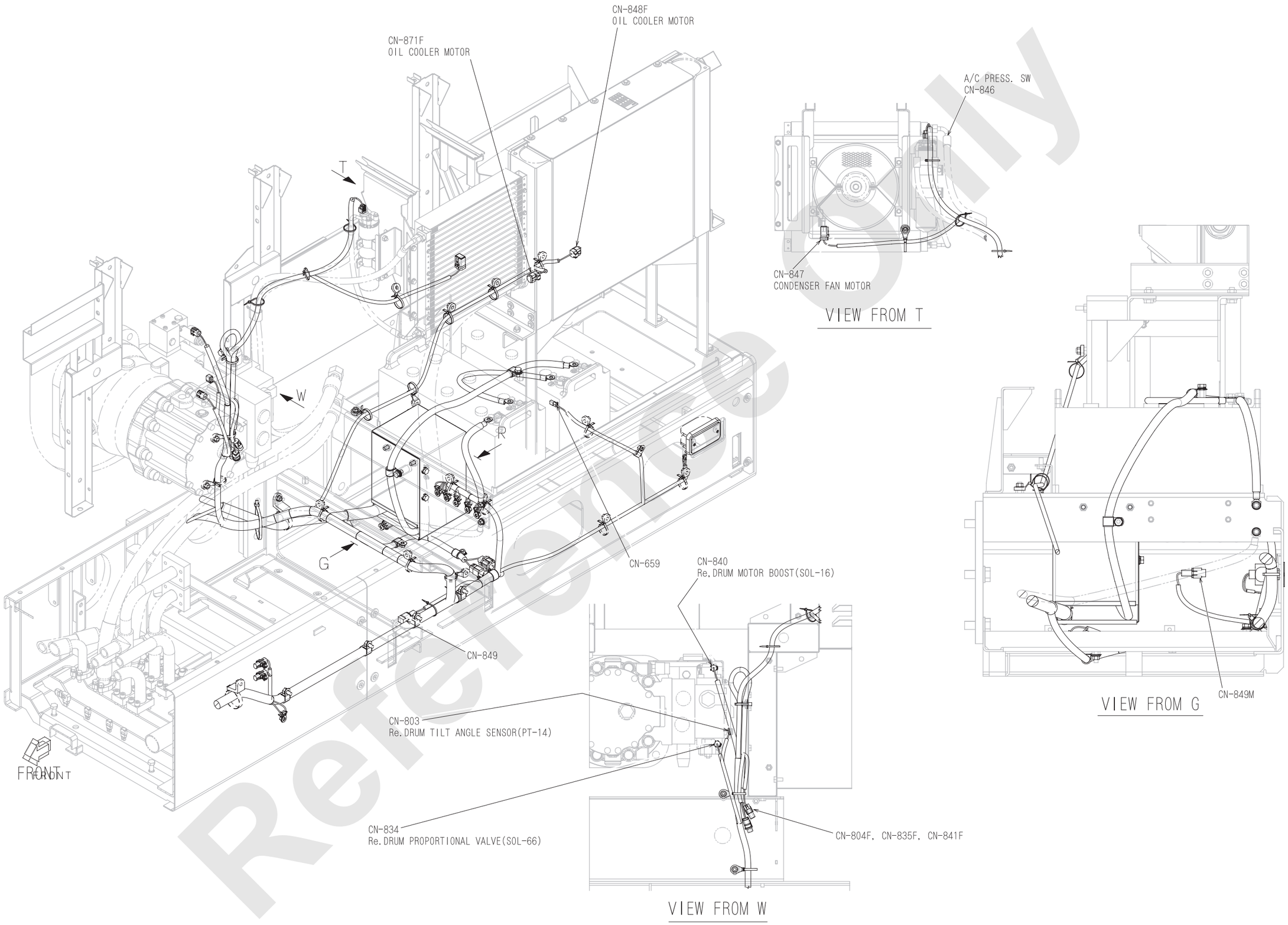

Reference only

(5/7)

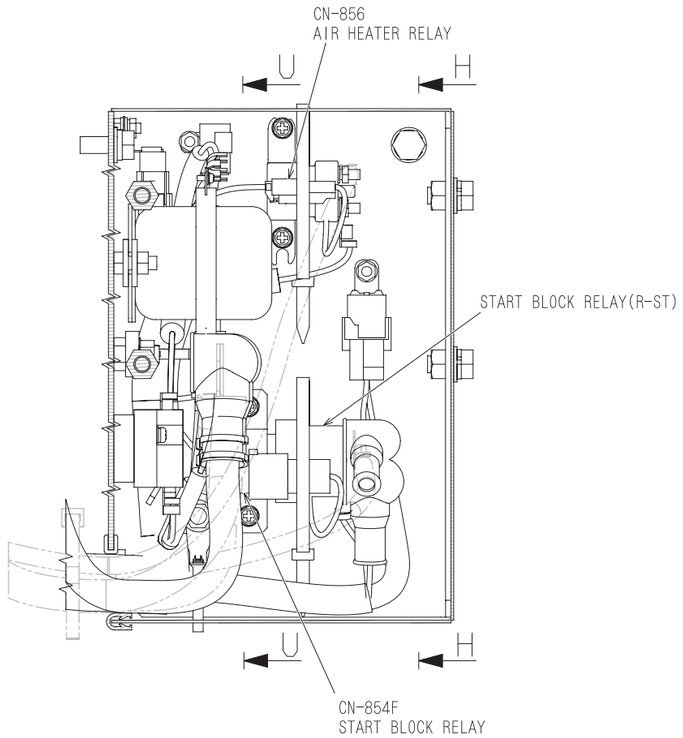

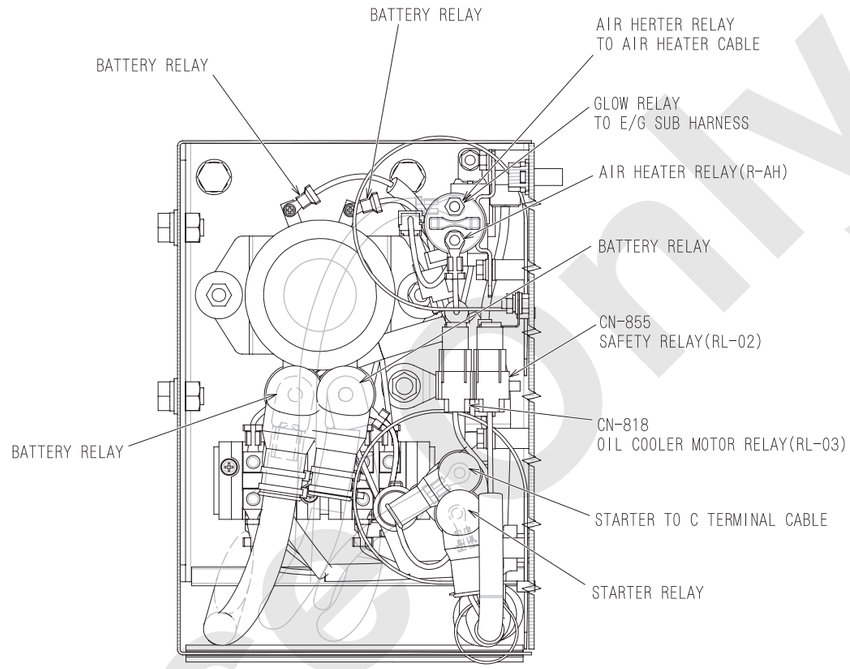

SECTION H-H

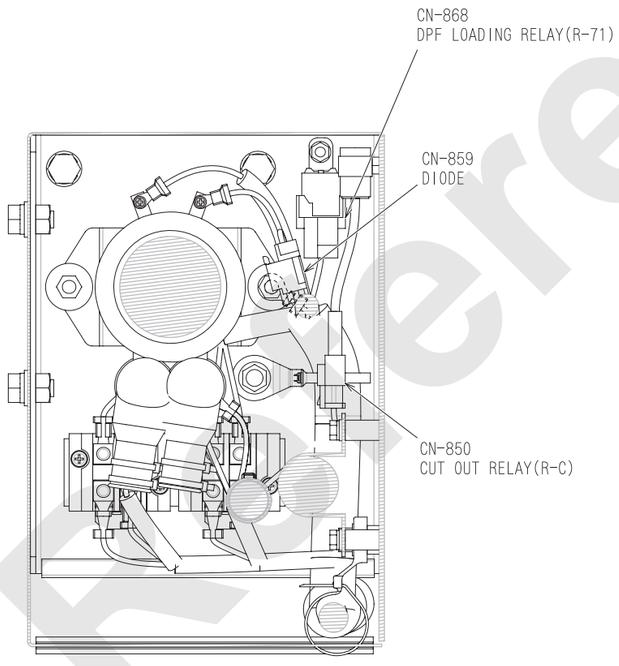

SECTION U-U

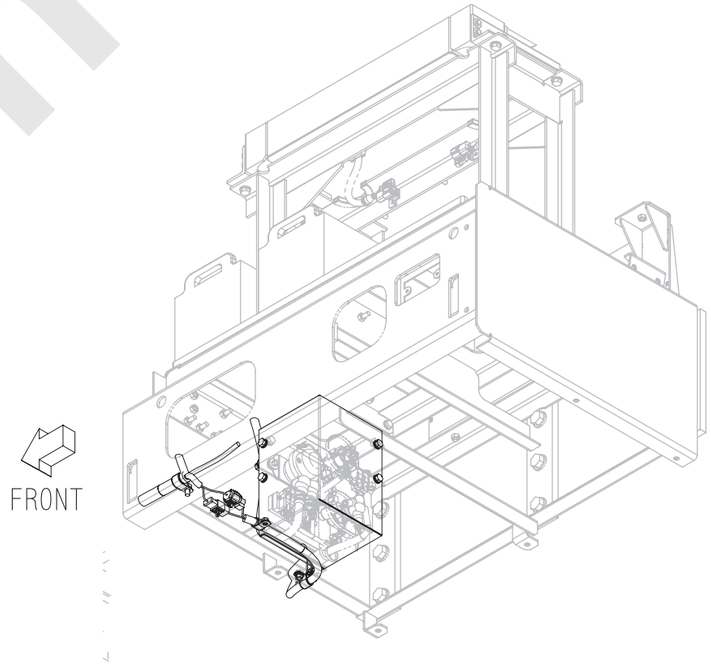

Reference Only

(6/7)

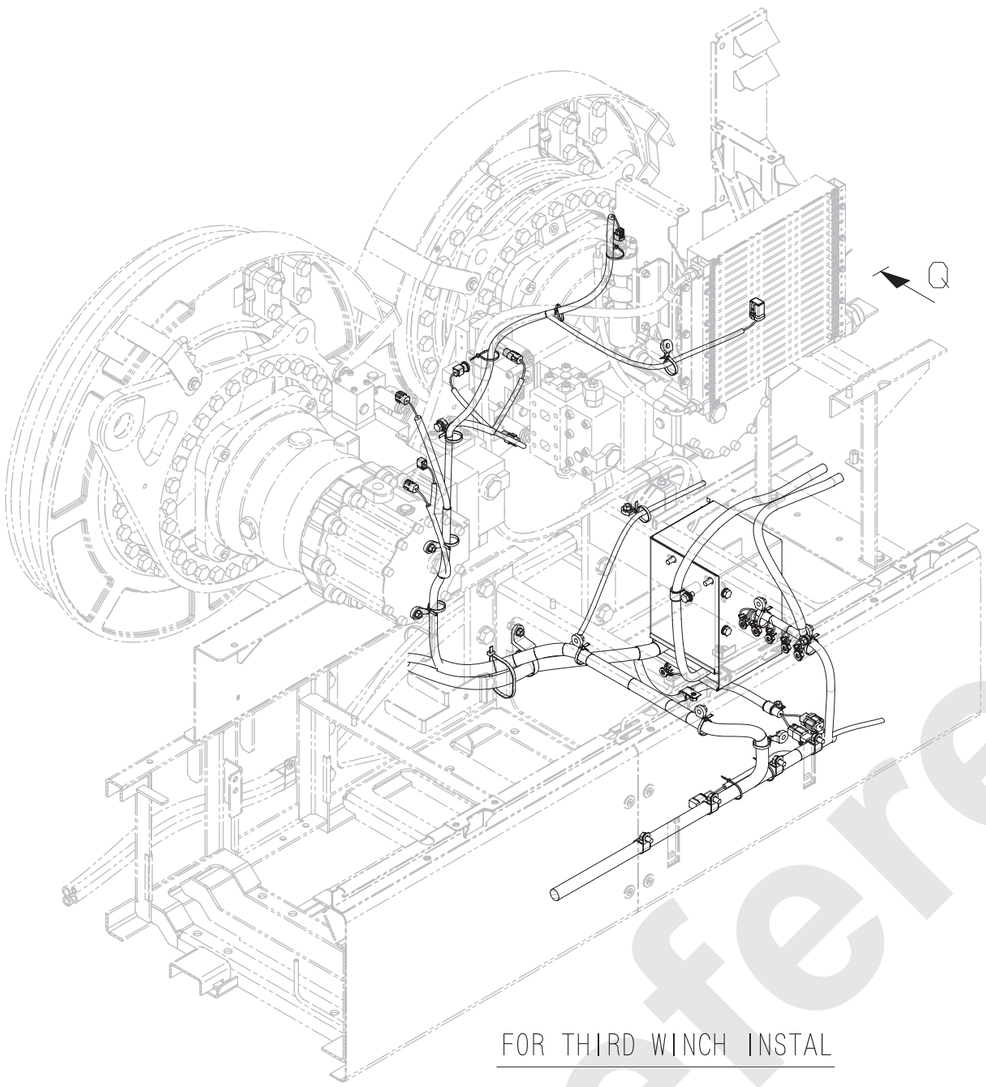

FOR THIRD WINCH INSTAL

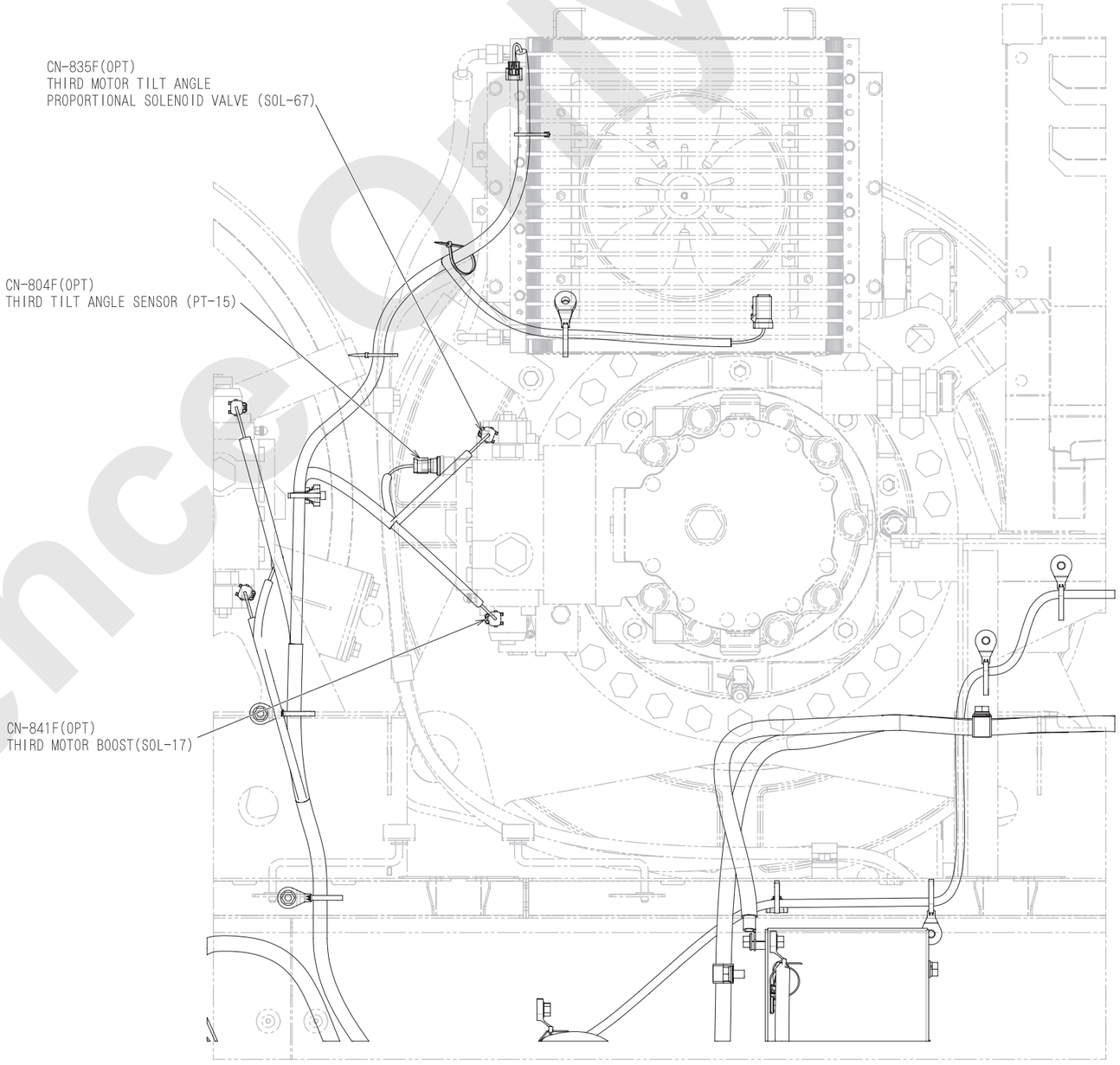

VIEW FROM Q

Reference Only

(7/7)

MAIN HARNESS

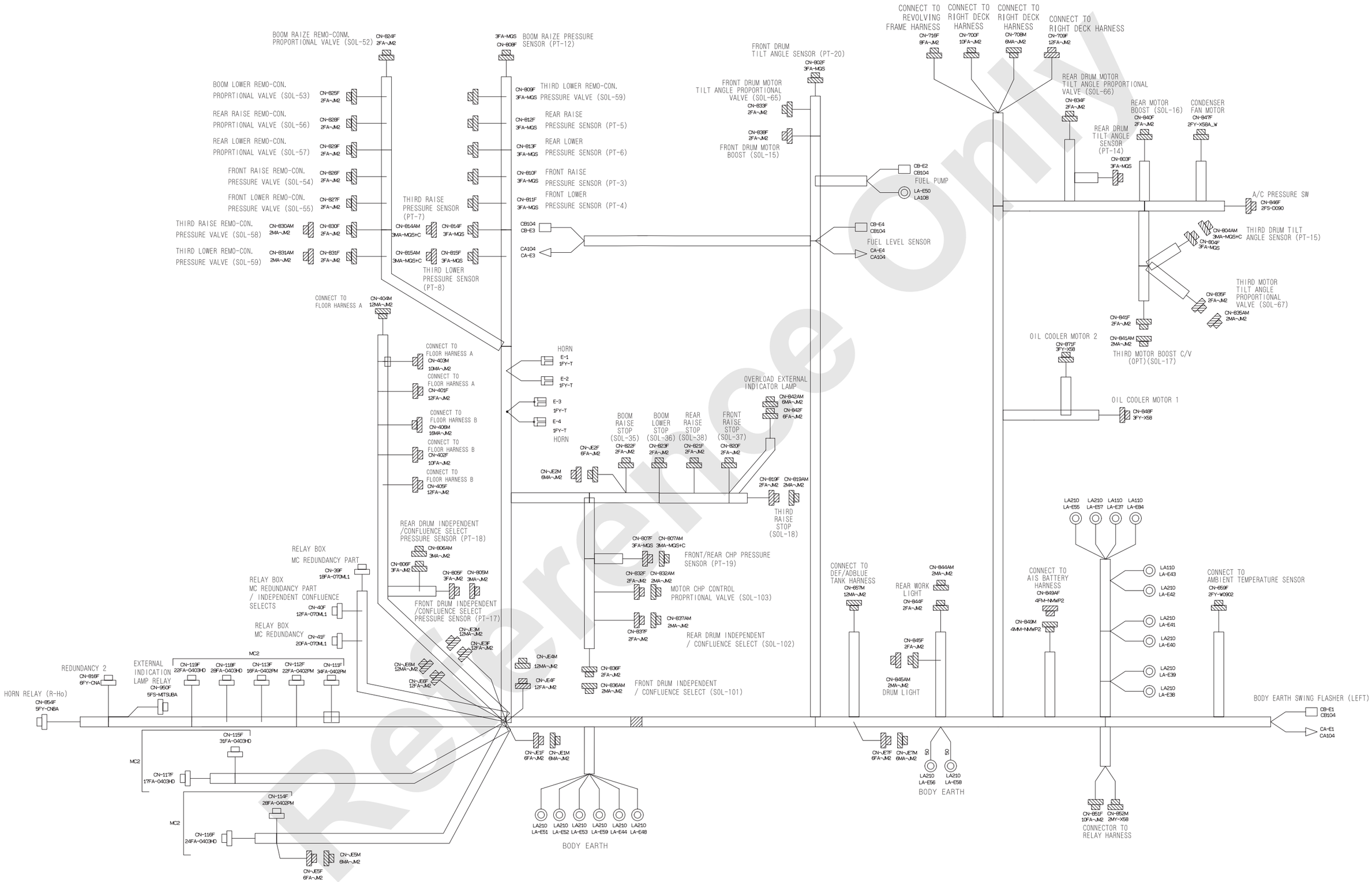

(1/5)

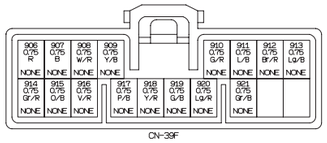

CN-39F
18FA-070ML1

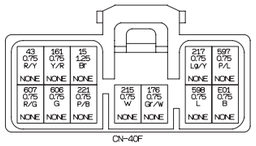

CN-40F
12FA-070ML1

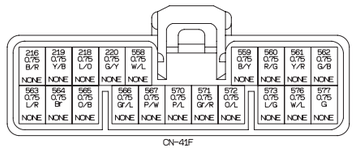

CN-41F
20FA-070ML1

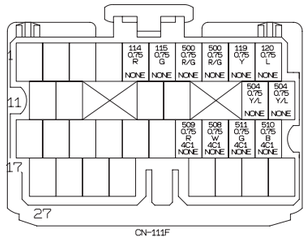

CN-111F
34FA-0402PM

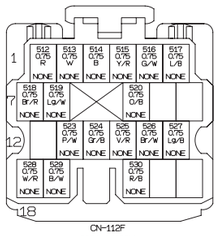

CN-112F
22FA-0402PM

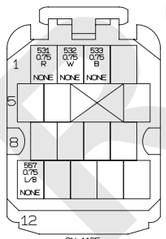

CN-113F
16FA-0402PM

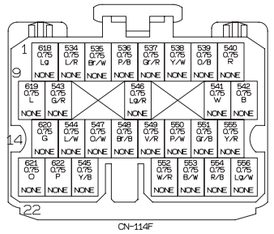

CN-114F
28FA-0402PM

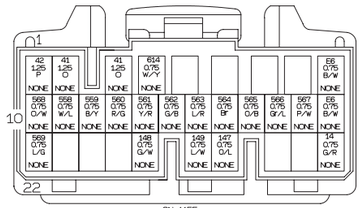

CN-115F
31FA-0403HD

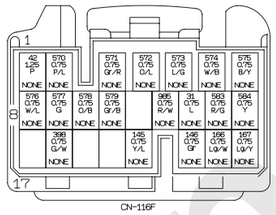

CN-116F
24FA-0403HD

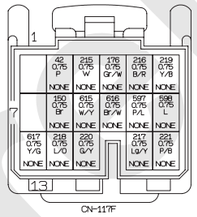

CN-117F
17FA-0403HD

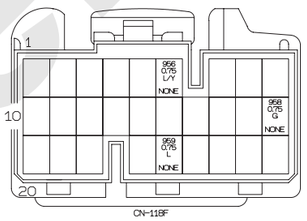

CN-118F
28FA-0403HD

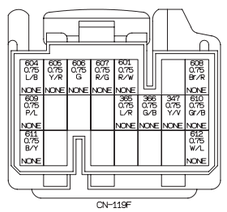

CN-119F
22FA-0403HD

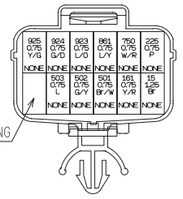

CN-401F
12FA-JM2

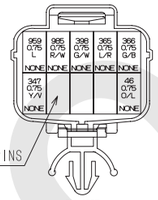

CN-402F
10FA-JM2

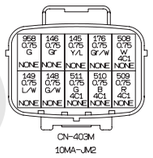

CN-403M
10MA-JM2

CN-404M
12MA-JM2

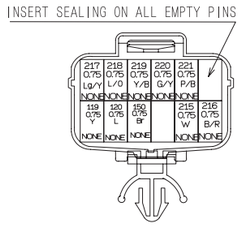

CN-405F
12FA-JM2

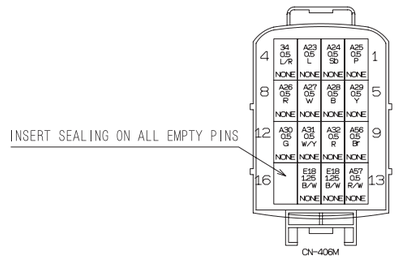

CN-406M
16MA-JM2

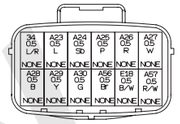

CN-657M
12MA-JM2

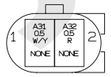

CN-659F
2FY-W0902D

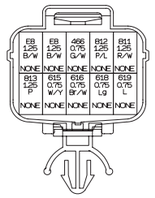

CN-700F
10FA-JM2

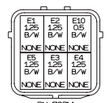

CN-708M
6MA-JM2

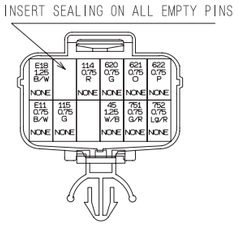

CN-709F
12FA-JM2

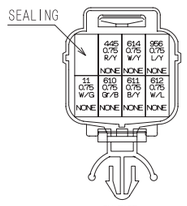

CN-716F
8FA-JM2

Reference Only

(2/5)

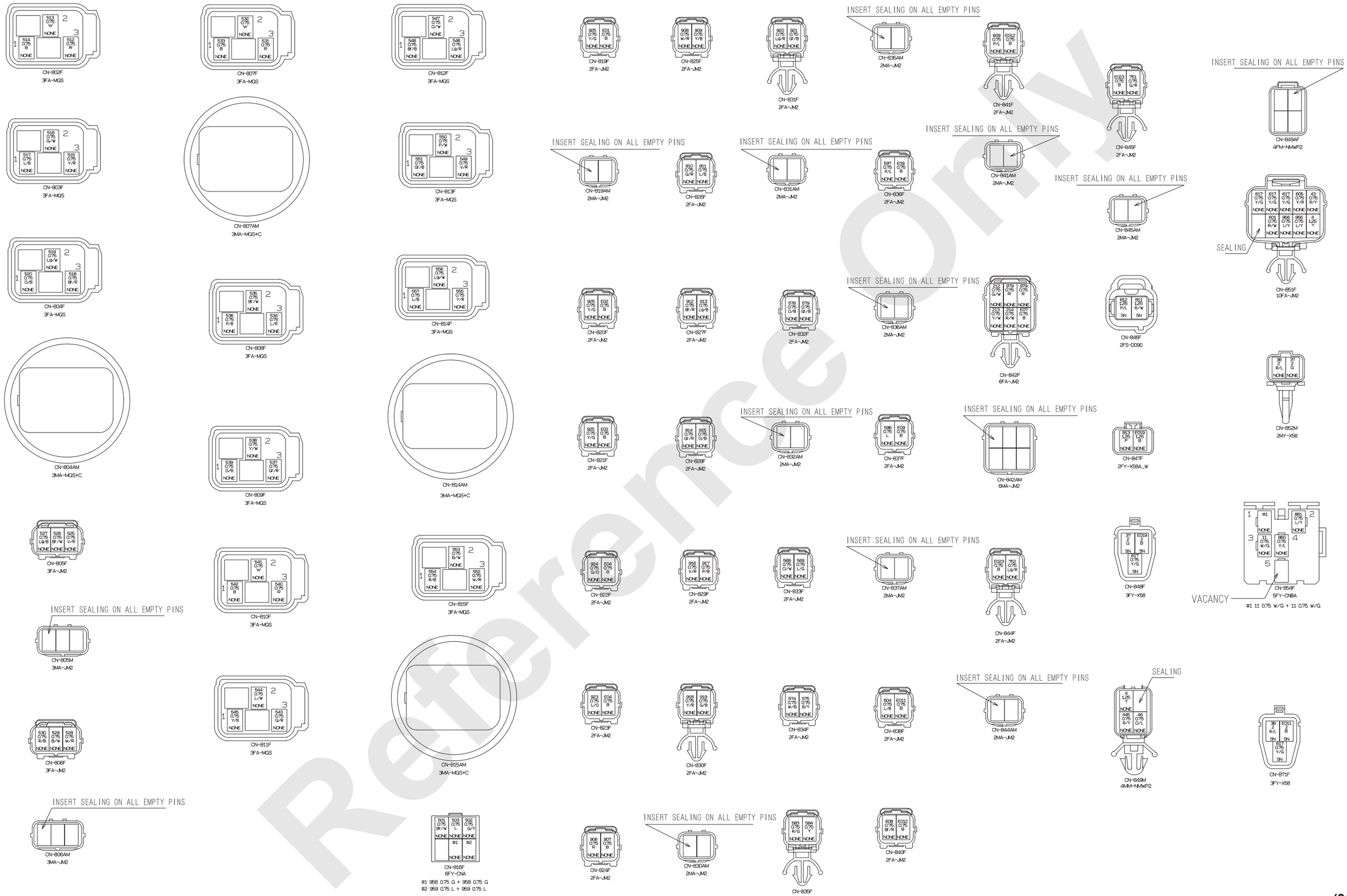

Reference Only

(3/5)

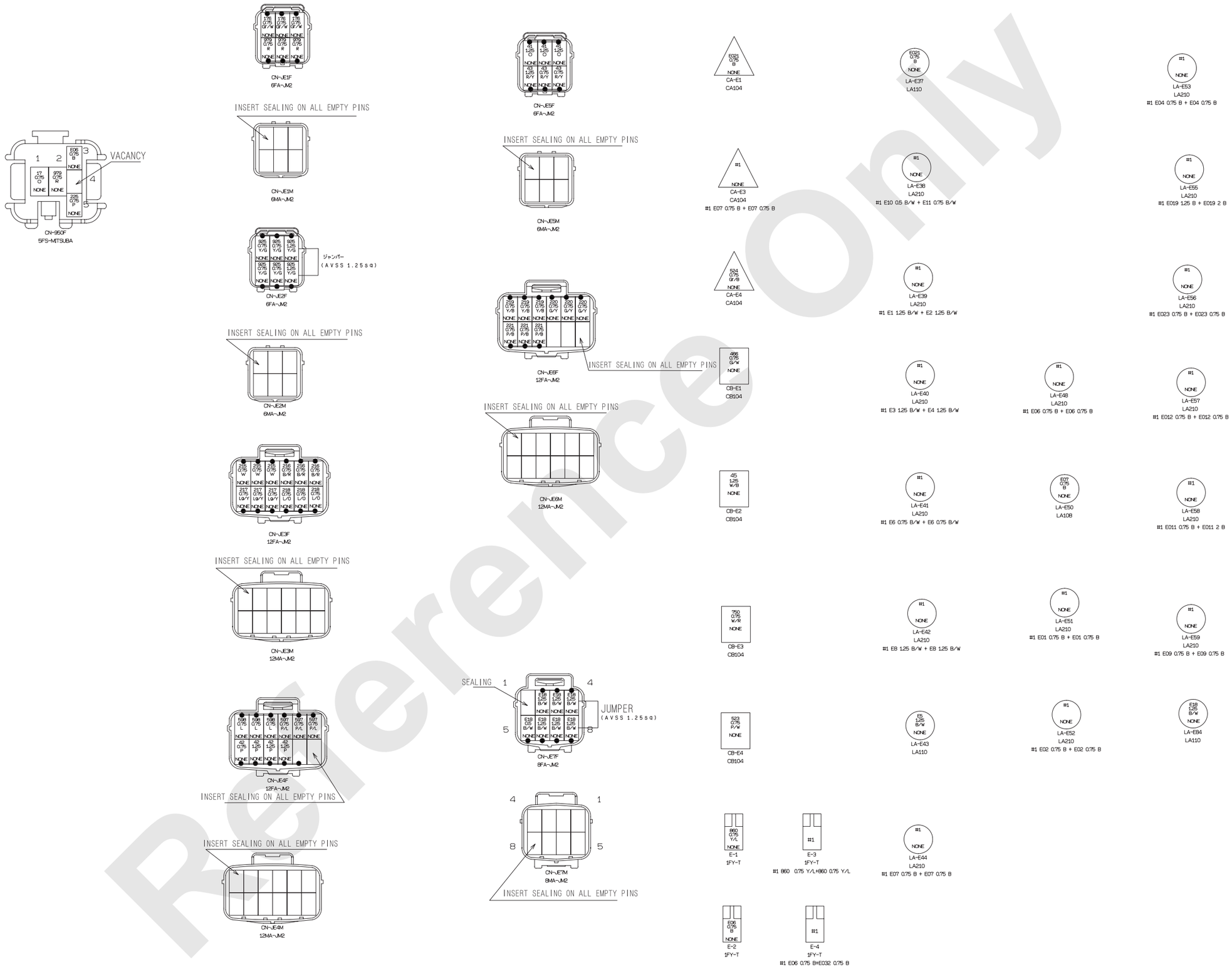

Reference Only

(4/5)

THE WIRE NO./COLOR LIST

WIRE NO.	WIRE COLOR	WIRE TYPE	SIZE	FROM	ID. SYMBOL	2WIRE CONNECT NO.	CONNECTION	2WIRE CONNECT NO.	ID. SYMBOL	T O
4	Y	AVSS	1.25	CN-849M						CN-851F
11	W/G	AVSS	0.75	CN-854F		DS-E21				CN-716F
11	W/G	AVSS	0.75	CN-854F		DS-E21				CN-854F
14	G/R	AVSS	0.75	CN-115F						CN-404M
15	Br	AVSS	1.25	CN-40F						CN-401F
17	O	AVSS	0.75	CN-404M						CN-950F
31	L	AVSS	0.75	CN-116F						CN-404M
34	L/R	AVSS	0.5	CN-406M						CN-657M
37	G	AVS	2	CN-848F						CN-852M
38	R/L	AVS	2	CN-871F						CN-852M
41	O	AVSS	1.25	CN-JE5F						CN-404M
41	O	AVSS	1.25	CN-JE5F						CN-115F
41	O	AVSS	1.25	CN-JE5F						CN-115F
42	P	AVSS	1.25	CN-JE4F						CN-404M
42	P	AVSS	0.75	CN-JE4F						CN-117F
42	P	AVSS	1.25	CN-JE4F						CN-116F
42	P	AVSS	1.25	CN-JE4F						CN-115F
43	R/Y	AVSS	1.25	CN-JE5F						CN-404M
43	R/Y	AVSS	0.75	CN-JE5F						CN-40F
43	R/Y	AVSS	0.75	CN-JE5F						CN-851F
45	W/B	AVSS	1.25	CN-709F						CB-E2
46	O/L	AVSS	0.75	CN-849M						CN-402F
145	Y/L	AVSS	0.75	CN-116F						CN-403M
146	Gr	AVSS	0.75	CN-116F						CN-403M
147	O/L	AVSS	0.75	CN-115F						CN-404M
148	G/W	AVSS	0.75	CN-115F						CN-403M
149	L/W	AVSS	0.75	CN-115F						CN-403M
150	Br	AVSS	0.75	CN-117F						CN-405F
161	Y/R	AVSS	0.75	CN-401F						CN-40F
166	Lg/W	AVSS	0.75	CN-404M						CN-116F
167	Lg/Y	AVSS	0.75	CN-404M						CN-116F
176	Gr/W	AVSS	0.75	CN-JE1F						CN-403M
176	Gr/W	AVSS	0.75	CN-JE1F						CN-40F
176	Gr/W	AVSS	0.75	CN-JE1F						CN-117F
212	G/W	AVSS	0.75	CN-842F						CN-404M
213	Y/W	AVSS	0.75	CN-842F						CN-404M
214	R/W	AVSS	0.75	CN-842F						CN-404M
215	W	AVSS	0.75	CN-405F						CN-JE3F
215	W	AVSS	0.75	CN-40F						CN-JE3F
215	W	AVSS	0.75	CN-117F						CN-JE3F
216	B/R	AVSS	0.75	CN-405F						CN-JE3F
216	B/R	AVSS	0.75	CN-41F						CN-JE3F
216	B/R	AVSS	0.75	CN-117F						CN-JE3F
217	Lg/Y	AVSS	0.75	CN-405F						CN-JE3F
217	Lg/Y	AVSS	0.75	CN-40F						CN-JE3F
217	Lg/Y	AVSS	0.75	CN-117F						CN-JE3F
218	L/O	AVSS	0.75	CN-405F						CN-JE3F
218	L/O	AVSS	0.75	CN-41F						CN-JE3F
218	L/O	AVSS	0.75	CN-117F						CN-JE3F
219	Y/B	AVSS	0.75	CN-405F						CN-JE6F
219	Y/B	AVSS	0.75	CN-41F						CN-JE6F
219	Y/B	AVSS	0.75	CN-117F						CN-JE6F
220	G/Y	AVSS	0.75	CN-405F						CN-JE6F
220	G/Y	AVSS	0.75	CN-41F						CN-JE6F
220	G/Y	AVSS	0.75	CN-117F						CN-JE6F
221	P/B	AVSS	0.75	CN-405F						CN-JE6F
221	P/B	AVSS	0.75	CN-40F						CN-JE6F
221	P/B	AVSS	0.75	CN-117F						CN-JE6F
225	P	AVSS	0.75	CN-401F						CN-950F
347	Y/V	AVSS	0.75	CN-119F						CN-402F
365	L/R	AVSS	0.75	CN-119F						CN-402F
366	G/B	AVSS	0.75	CN-119F						CN-402F
398	G/W	AVSS	0.75	CN-402F						CN-116F
445	R/Y	AVSS	0.75	CN-716F						CN-849M
466	G/W	AVSS	0.75	CB-E1						CN-700F
500	R/G	AVSS	0.75	CN-111F						CN-111F
501	Br/W	AVSS	0.75	CN-816F						CN-401F
502	G/Y	AVSS	0.75	CN-401F						CN-816F
503	L	AVSS	0.75	CN-816F						CN-401F
504	Y/L	AVSS	0.75	CN-111F						CN-111F
512	R	AVSS	0.75	CN-112F						CN-802F
513	W	AVSS	0.75	CN-112F						CN-802F
514	B	AVSS	0.75	CN-112F						CN-802F
515	Y/R	AVSS	0.75	CN-112F						CN-803F
516	G/W	AVSS	0.75	CN-112F						CN-803F
517	L/B	AVSS	0.75	CN-112F						CN-803F
518	Br/R	AVSS	0.75	CN-112F						CN-804F
519	Lg/W	AVSS	0.75	CN-112F						CN-804F
520	O/B	AVSS	0.75	CN-112F						CN-804F
523	P/W	AVSS	0.75	CB-E4						CN-112F
524	Gr/B	AVSS	0.75	CA-E4						CN-112F
525	V/R	AVSS	0.75	CN-112F						CN-805F
526	Br/W	AVSS	0.75	CN-112F						CN-805F
527	Lg/B	AVSS	0.75	CN-112F						CN-805F
528	W/R	AVSS	0.75	CN-112F						CN-806F
529	B/W	AVSS	0.75	CN-112F						CN-806F
530	R/B	AVSS	0.75	CN-112F						CN-806F
531	R	AVSS	0.75	CN-113F						CN-807F
532	W	AVSS	0.75	CN-113F						CN-807F
533	B	AVSS	0.75	CN-113F						CN-807F
534	L/R	AVSS	0.75	CN-114F						CN-808F
535	Br/W	AVSS	0.75	CN-114F						CN-808F
536	P/B	AVSS	0.75	CN-114F						CN-808F
537	Gr/R	AVSS	0.75	CN-114F						CN-809F
538	Y/W	AVSS	0.75	CN-114F						CN-809F
539	O/B	AVSS	0.75	CN-114F						CN-809F
540	R	AVSS	0.75	CN-114F						CN-810F
541	W	AVSS	0.75	CN-114F						CN-810F
542	B	AVSS	0.75	CN-114F						CN-810F
543	G/R	AVSS	0.75	CN-114F						CN-811F
544	L/W	AVSS	0.75	CN-114F						CN-811F
545	Y/B	AVSS	0.75	CN-114F						CN-811F
546	Lg/R	AVSS	0.75	CN-114F						CN-812F
547	O/W	AVSS	0.75	CN-114F						CN-812F
548	Br/B	AVSS	0.75	CN-114F						CN-812F

WIRE NO.	WIRE COLOR	WIRE TYPE	SIZE	FROM	ID. SYMBOL	2WIRE CONNECT NO.	CONNECTION	2WIRE CONNECT NO.	ID. SYMBOL	T O
549	V/R	AVSS	0.75	CN-114F						CN-813F
550	P/W	AVSS	0.75	CN-114F						CN-813F
551	Gr/B	AVSS	0.75	CN-114F						CN-813F
552	W/R	AVSS	0.75	CN-114F						CN-815F
553	B/W	AVSS	0.75	CN-114F						CN-815F
554	R/B	AVSS	0.75	CN-114F						CN-815F
555	Y/R	AVSS	0.75	CN-114F						CN-814F
556	Lg/W	AVSS	0.75	CN-114F						CN-814F
557	L/B	AVSS	0.75	CN-113F						CN-814F
597	P/L	AVSS	0.75	CN-JE4F						CN-117F
597	P/L	AVSS	0.75	CN-JE4F						CN-836F
597	P/L	AVSS	0.75	CN-JE4F						CN-40F
598	L	AVSS	0.75	CN-JE4F						CN-117F
598	L	AVSS	0.75	CN-JE4F						CN-837F
598	L	AVSS	0.75	CN-JE4F						CN-40F
601	R/W	AVSS	0.75	CN-851F						CN-119F
604	L/B	AVSS	0.75	CN-119F						CN-838F
605	Y/R	AVSS	0.75	CN-119F						CN-851F
606	G	AVSS	0.75	CN-119F						CN-40F
607	R/G	AVSS	0.75	CN-119F						CN-40F
608	Br/R	AVSS	0.75	CN-119F						CN-840F
609	P/L	AVSS	0.75	CN-119F						CN-841F
610	Gr/B	AVSS	0.75	CN-716F						CN-119F
611	B/Y	AVSS	0.75	CN-716F						CN-119F
612	W/L	AVSS	0.75	CN-716F						CN-119F
614	W/Y	AVSS	0.75	CN-115F						CN-716F
615	W/Y	AVSS	0.75	CN-700F						CN-117F
616	Br/W	AVSS	0.75	CN-700F						CN-117F
617	Y/G	AVSS	0.75	CN-851F						CN-848F
617	Y/G	AVSS	0.75	CN-851F						CN-871F
617	Y/G	AVSS	0.75	CN-851F						CN-117F
618	Lg	AVSS	0.75	CN-700F						CN-114F
619	L	AVSS	0.75	CN-700F						CN-114F
620	G	AVSS	0.75	CN-709F						CN-114F
621	O	AVSS	0.75	CN-114F						CN-709F
622	P	AVSS	0.75	CN-114F						CN-709F
750	W/R	AVSS	0.75	CN-401F						CB-E3
751	G/R	AVSS	0.75	CN-845F						CN-709F
752	Lg/R	AVSS	0.75	CN-844F						CN-709F
811	R/W	AVSS	1.25	CN-846F						CN-700F
812	P/L	AVSS	1.25	CN-846F						CN-700F
813	P	AVS	1.25	CN-700F						CN-847F
860	Y/L	AVSS	0.75	CN-854F				DS-E29		E-3
860	Y/L	AVSS	0.75	E-1				DS-E29		E-3
861	L/Y	AVSS	0.75	CN-854F						CN-401F
923	L/O	AVSS	0.75	CN-823F						CN-401F
924	G/O	AVSS	0.75	CN-822F						CN-401F
925	Y/G	AVSS	0.75	CN-JE2F						CN-819F
925	Y/G	AVSS	0.75	CN-JE2F						CN-820F
925	Y/G	AVSS	1.25	CN-JE2F						CN-JE2F
925	Y/G	AVSS	0.75	CN-821F						CN-JE2F
925	Y/G	AVSS	0.75	CN-401F						CN-JE2F
956	L/Y	AVSS	0.75	CN-118F						CN-851F
956	L/Y	AVSS	0.75	CN-716F						CN-851F
958	G	AVSS	0.75	CN-118F				DS-E23		CN-816F
958	G	AVSS	0.75	CN-403F				DS-E23		CN-816F
959	L	AVSS	0.75	CN-118F				DS-E24		CN-816F
959	L	AVSS	0.75	CN-402F				DS-E24		CN-816F
979	R	AVSS	0.75	CN-950F						CN-JE1F
979	R	AVSS	0.75	CN-842F						CN-JE1F
979	R	AVSS	0.75	CN-842F						CN-JE1F
995	R/W	AVSS	0.75	CN-402F						CN-116F
A23	L	AVSS	0.5	CN-406M						CN-657M
A24	SD	AVSS	0.5	CN-406M						CN-657M
A25	P	AVSS	0.5	CN-406M						CN-657M
A26	R	AVSS	0.5	CN-406M						CN-657M
A27	W	AVSS	0.5	CN-406M						CN-657M
A28	B	AVSS	0.5	CN-406M						CN-657M
A29	Y	AVSS	0.5	CN-406M						CN-657M
A30	G	AVSS	0.5	CN-406M						CN-657M
A31	W/Y	AVSS	0.5	CN-406M						CN-659F
A32	R	AVSS	0.5	CN-406M						CN-659F
114	R	AVSS	0.75	CN-709F	TWSTO.75TW2				TWSTO.75TW2	CN-111F
115	G	AVSS	0.75	CN-709F	TWSTO.75TW2				TWSTO.75TW2	CN-111F
119	Y	AVSS	0.75	CN-111F	TWSTO.75TW3				TWSTO.75TW3	CN-405F
120	L	AVSS	0.75	CN-111F	TWSTO.75TW3				TWSTO.75TW3	CN-405F
558	W/L	AVSS	0.75	CN-115F	TWSTO.75TW1				TWSTO.75TW1	CN-41F
559	B/Y	AVSS	0.75	CN-115F	TWSTO.75TW1				TWSTO.75TW1	CN-41F
560	R/G	AVSS	0.75	CN-115F	TWSTO.75TW4				TWSTO.75TW4	CN-41F
561	Y/R	AVSS	0.75	CN-115F	TWSTO.75TW4				TWSTO.75TW4	CN-41F
562	G/B	AVSS	0.75	CN-115F	TWSTO.75TW5				TWSTO.75TW5	CN-41F
563	L/R	AVSS	0.75	CN-115F	TWSTO.75TW5				TWSTO.75TW5	CN-41F
564	Br	AVSS	0.75	CN-115F	TWSTO.75TW6				TWSTO.75TW6	CN-41F
565	O/B	AVSS	0.75	CN-115F	TWSTO.75TW6				TWSTO.75TW6	CN-41F
566	Gr/L	AVSS	0.75	CN-115F	TWSTO.75TW7				TWSTO.75TW7	CN-41F
567	P/W	AVSS	0.75	CN-115F	TWSTO.75TW7				TWSTO.75TW7	CN-41F
568	O/W	AVSS	0.75	CN-115F	TWSTO.75TW20				TWSTO.75TW20	CN-833F
569	L/G	AVSS	0.75	CN-115F	TWSTO.75TW20				TWSTO.75TW20	CN-833F
570	P/L	AVSS	0.75	CN-116F	TWSTO.75TW8				TWSTO.75TW8	CN-41F
571	Gr/R	AVSS	0.75	CN-116F	TWSTO.75TW8				TWSTO.75TW8	CN-41F
572	O/L	AVSS	0.75	CN-116F	TWSTO.75TW9				TWSTO.75TW9	CN-41F
573	L/G	AVSS	0.75	CN-116F	TWSTO.75TW9				TWSTO.75TW9	CN-41F
574	W/B	AVSS	0.75	CN-116F	TWSTO.75TW21				TWSTO.75TW21	CN-834F
575	B/Y	AVSS	0.75	CN-116F	TWSTO.75TW21				TWSTO.75TW21	CN-834F
576	W/L	AVSS	0.75	CN-116F	TWSTO.75TW10				TWSTO.75TW10	CN-41F
577	G	AVSS	0.75	CN-116F	TWSTO.75TW10				TWSTO.75TW10	CN-41F
578	O/B	AVSS	0.75	CN-116F	TWSTO.75TW19				TWSTO.75TW19	CN-832F
579	Gr/B	AVSS	0.75	CN-116F	TWSTO.75TW19				TWSTO.75TW19	CN-832F
583	R/L	AVSS	0.75	CN-116F	TWSTO.75TW22				TWSTO.75TW22	CN-835F
584	Y	AVSS	0.75	CN-116F	TWSTO.75TW22				TWSTO.75TW22	CN-835F
906	R	AVSS	0.75	CN-39F	TWSTO.75TW18				TWSTO.75TW18	CN-824F
907	B	AVSS	0.75	CN-39F	TWSTO.75TW18				TWSTO.75TW18	CN-824F

WIRE NO.	WIRE COLOR	WIRE TYPE	SIZE	FROM	ID. SYMBOL	2WIRE CONNECT NO.	CONNECTION	2WIRE CONNECT NO.	ID. SYMBOL	T O
908	W/R	AVSS	0.75	CN-39F	TWSTO.75TW11				TWSTO.75TW11	CN-825F
909	Y/B	AVSS	0.75	CN-39F	TWSTO.75TW11				TWSTO.75TW11	CN-825F
910	G/R	AVSS	0.75	CN-39F	TWSTO.75TW12				TWSTO.75TW12	CN-826F
911	L/B	AVSS	0.75	CN-39F	TWSTO.75TW12				TWSTO.75TW12	CN-826F
912	Br/R	AVSS	0.75	CN-39F	TWSTO.75TW13				TWSTO.75TW13	CN-827F
913	Lg/B	AVSS	0.75	CN-39F	TWSTO.75TW13				TWSTO.75TW13	CN-827F
914	Gr/R	AVSS	0.75	CN-39F	TWSTO.75TW14				TWSTO.75TW14	CN-828F
915	O/B	AVSS	0.75	CN-39F	TWSTO.75TW14				TWSTO.75TW14	CN-828F
916	V/R	AVSS	0.75	CN-39F	TWSTO.75TW15				TWSTO.75TW15	CN-829F
917	P/B	AVSS	0.75	CN-39F	TWSTO.75TW15				TWSTO.75TW15	CN-829F
918	Y/R	AVSS	0.75	CN-39F	TWSTO.75TW16				TWSTO.75TW16	CN-830F
919	G/B	AVSS	0.75	CN-39F	TWSTO.75TW16				TWSTO.75TW16	CN-830F
920	Lg/R	AVSS	0.75	CN-39F	TWSTO.75TW17				TWSTO.75TW17	CN-831F
921	Gr/B	AVSS	0.75	CN-39F	TWSTO.75TW17				TWSTO.75TW17	CN-831F
A56	Br	AVSS	0.5	CN-406M	TWSTO.75TW23				TWSTO.75TW23	CN-657M
A57	R/W	AVSS	0.5	CN-406M	TWSTO.75TW23				TWSTO.75TW23	CN-657M
508	W	MVVS	0.75	CN-403M	MVVS4C1				MVVS4C1	CN-111F
509	R	MVVS	0.75	CN-403M	MVVS4C1				MVVS4C1	CN-111F
510	B	MVVS	0.75	CN-403M	MVVS4C1				MVVS4C1	CN-111F
511	G	MVVS	0.75	CN-403M	MVVS4C1				MVVS4C1	CN-111F
E01	B	AVSS	0.75	LA-E51		DS-E14				CN-819F
E01	B	AVSS	0.75	LA-E51		DS-E14				CN-40F
E02	B	AVSS	0.75	CN-820F				DS-E1		LA-E52
E02	B	AVSS	0.75	CN-821F				DS-E1		LA-E52
E04	B	AVSS	0.75	LA-E53		DS-E2				CN-822F
E04	B	AVSS	0.75	LA-E53		DS-E2				CN-823F
E06	B	AVSS	0.75	E-2				DS-E30		E-4
E06	B	AVSS	0.75	LA-E48		DS-E31		DS-E30		E-4
E06	B	AVSS	0.75	LA-E48		DS-E31				CN-950F
E07	B	AVSS	0.75	LA-E50				DS-E13		LA-E44
E07	B	AVSS	0.75	CA-E3		DS-E24		DS-E13		LA-E44
E07	B	AVSS	0.75	CA-E3		DS-E24				CA-842F
E09	B	AVSS	0.75	CN-837F				DS-E4		LA-E59
E09	B	AVSS	0.75	CN-836F				DS-E4		LA-E59
E011	B	AVS	2	CN-871F				DS-E25		LA-E58
E011	B	AVSS	0.75	CN-839F				DS-E25		LA-E58
E012	B	AVSS	0.75	LA-E57		DS-E23				CN-840F
E012	B	AVSS	0.75	LA-E57		DS-E23				CN-841F
E019	B	AVS	1.25	CN-847F				DS-E8		LA-E55
E019	B	AVS	2	CN-848F				DS-E8		LA-E55
E021	B	AVSS	0.75	LA-E37						CA-E1
E023	B	AVSS	0.75	CN-845F				DS-E7		LA-E56
E023	B	AVSS	0.75	CN-844F				DS-E7		LA-E56
E1	B/W	AVSS	1.25	LA-E39		DS-E10				CN-708M
E2	B/W	AVSS	1.25	LA-E39		DS-E10				CN-708M
E3	B/W	AVSS	1.25	CN-708M				DS-E11		LA-E40
E4	B/W	AVSS	1.25	CN-708M				DS-E11		LA-E40
E5	B/W	AVSS	1.25	CN-708M						LA-E43
E6	B/W	AVSS	0.75	LA-E41		DS-E3				CN-115F
E6	B/W	AVSS	0.75	LA-E41		DS-E3				CN-115F
E8	B/W	AVSS	1.25	CN-700F				DS-E12		LA-E42
E8	B/W	AVSS	1.25	CN-700F				DS-E12		LA-E42
E10	B/W	AVSS	0.5	LA-E38		DS-E9				CN-709M
E11	B/W	AVSS	0.75	LA-E38		DS-E9				CN-709F
E18	B/W	AVSS	1.25	CN-406M						CN-JE7F
E18	B/W	AVSS	1.25	CN-406M						CN-JE7F
E18	B/W	AVSS	1.25	CN-JE7F						CN-JE7F
E18	B/W	AVSS	0.5	CN-JE7F						CN-657M
E18	B/W	AVSS	1.25	CN-JE7F						LA-E84
E18	B/W	AVSS	1.25	CN-JE7F						CN-709F

(5/5)

Panasonic

RELAY HARNESS

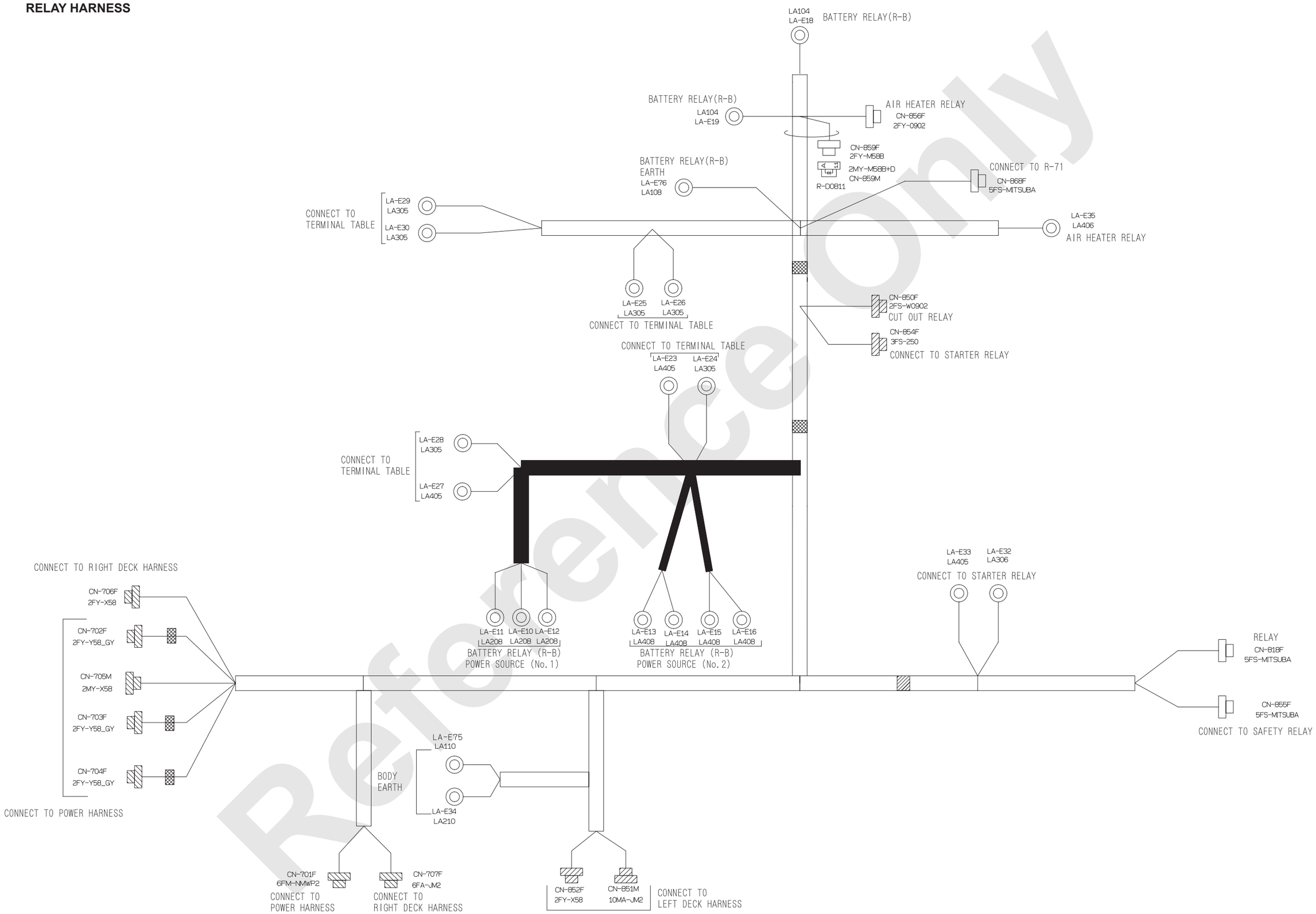

(1/3)

Reference Only

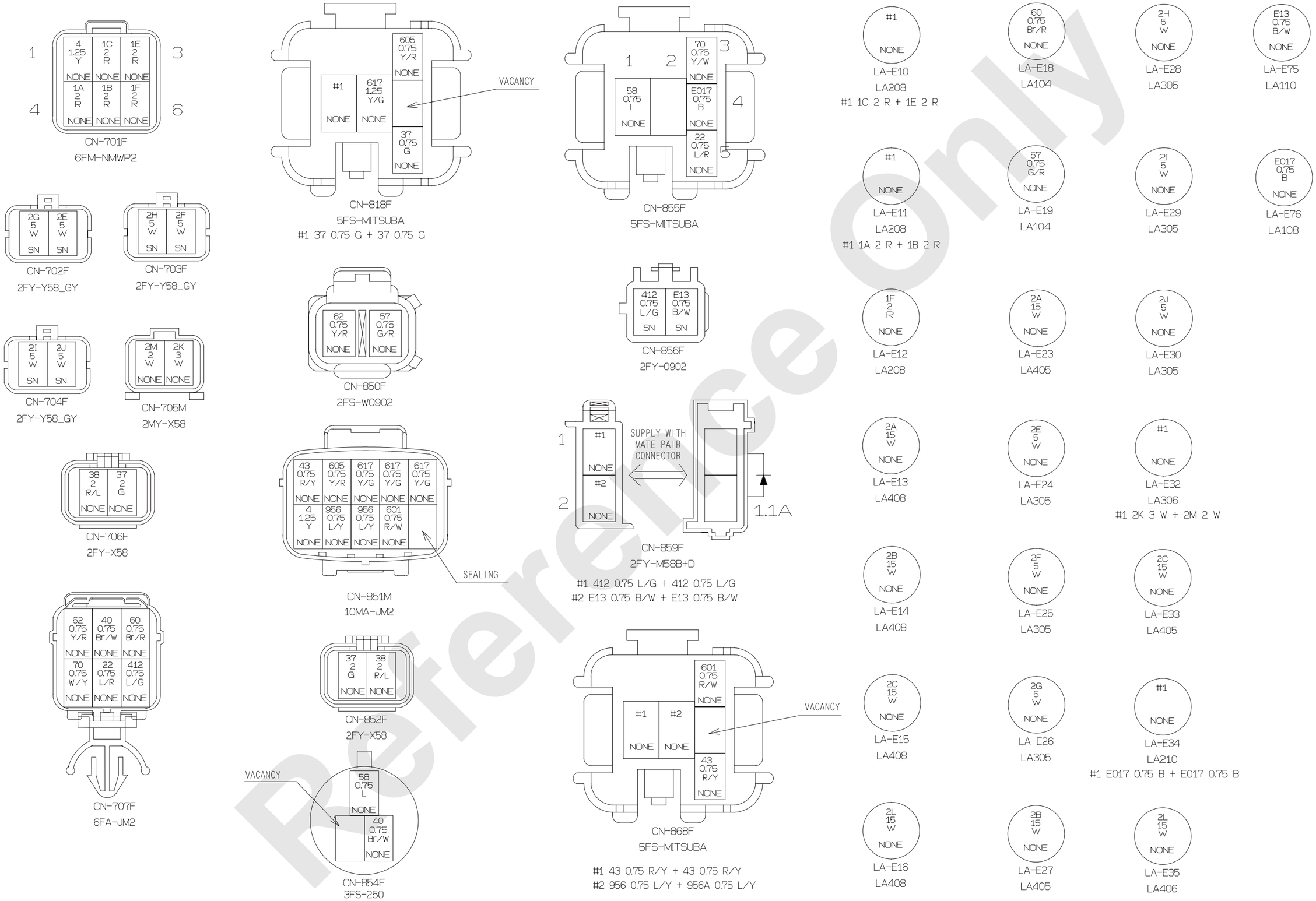

Reference Only

(2/3)

THE WIRE NO. /COLOR LIST

※1 IDENTIFICATION SYMBOL
※2 TWO WIRE CONNECT NUMBER

WIRE NO.	WIRE COLOR	WIRE TYPE	SIZE	F R O M	※1	※2	CONNECTION	※2	※1	T O
1A	R	AVS	2	LA-E11		DS-E16				CN-701F
1B	R	AVS	2	LA-E11		DS-E16				CN-701F
1C	R	AVS	2	LA-E10		DS-E6				CN-701F
1E	R	AVS	2	LA-E10		DS-E6				CN-701F
1F	R	AVS	2	LA-E12						CN-701F
2A	W	AV	15	LA-E23						LA-E13
2B	W	AV	15	LA-E14						LA-E27
2C	W	AV	15	LA-E33						LA-E15
2E	W	AVS	5	CN-702F						LA-E24
2F	W	AVS	5	CN-703F						LA-E25
2G	W	AVS	5	CN-702F						LA-E26
2H	W	AVS	5	CN-703F						LA-E28
2I	W	AVS	5	CN-704F						LA-E29
2J	W	AVS	5	CN-704F						LA-E30
2K	W	AVS	3	LA-E32		DS-E7				CN-705M
2M	W	AVS	2	LA-E32		DS-E7				CN-705M
2L	W	AV	15	LA-E35						LA-E16
4	Y	AVSS	1.25	CN-701F						CN-851M
22	L/R	AVSS	0.75	CN-707F						CN-855F
37	G	AVS	2	CN-706F						JS-B01
37	G	AVS	2	JS-B01						CN-852F
37	G	AVSS	0.75	JS-B01				DS-E1		CN-818F
37	G	AVSS	0.75	CN-818F				DS-E1		CN-818F
38	R/L	AVS	2	CN-706F						CN-852F
40	Br/W	AVSS	0.75	CN-707F						CN-854F
43	R/Y	AVSS	0.75	CN-851M				DS-E2		CN-868F
43	R/Y	AVSS	0.75	CN-868F				DS-E2		CN-868F
57	G/R	AVSS	0.75	CN-850F						LA-E19
58	L/R	AVSS	0.75	CN-854F						CN-855F
60	Br/R	AVSS	0.75	CN-707F						LA-E18
62	Y/R	AVSS	0.75	CN-707F						CN-850F
70	W/Y	AVSS	0.75	CN-707F						CN-855F
412	L/G	AVSS	0.75	CN-707F				DS-E4		CN-859F
412	L/G	AVSS	0.75	CN-856F				DS-E4		CN-859F
601	R/W	AVSS	0.75	CN-851M						CN-868F
605	Y/R	AVSS	0.75	CN-851M						CN-818F
617	Y/G	AVSS	1.25	CN-818F						JS-B02
617	Y/G	AVSS	0.75	CN-851M						JS-B02
617	Y/G	AVSS	0.75	JS-B03						JS-B02
617	Y/G	AVSS	0.75	JS-B03						CN-851M
617	Y/G	AVSS	0.75	JS-B03						CN-851M
956	L/Y	AVSS	0.75	CN-851M				DS-E3		CN-868F
956	L/Y	AVSS	0.75	CN-851M				DS-E3		CN-868F
E017	B	AVSS	0.75	CN-855F						LA-E34
E017	B	AVSS	0.75	LA-E76						LA-E34
E13	B/W	AVSS	0.75	LA-E75				DS-E5		CN-859F
E13	B/W	AVSS	0.75	CN-856F				DS-E5		CN-859F

Reference Only

(3/3)

5. RIGHT DECK

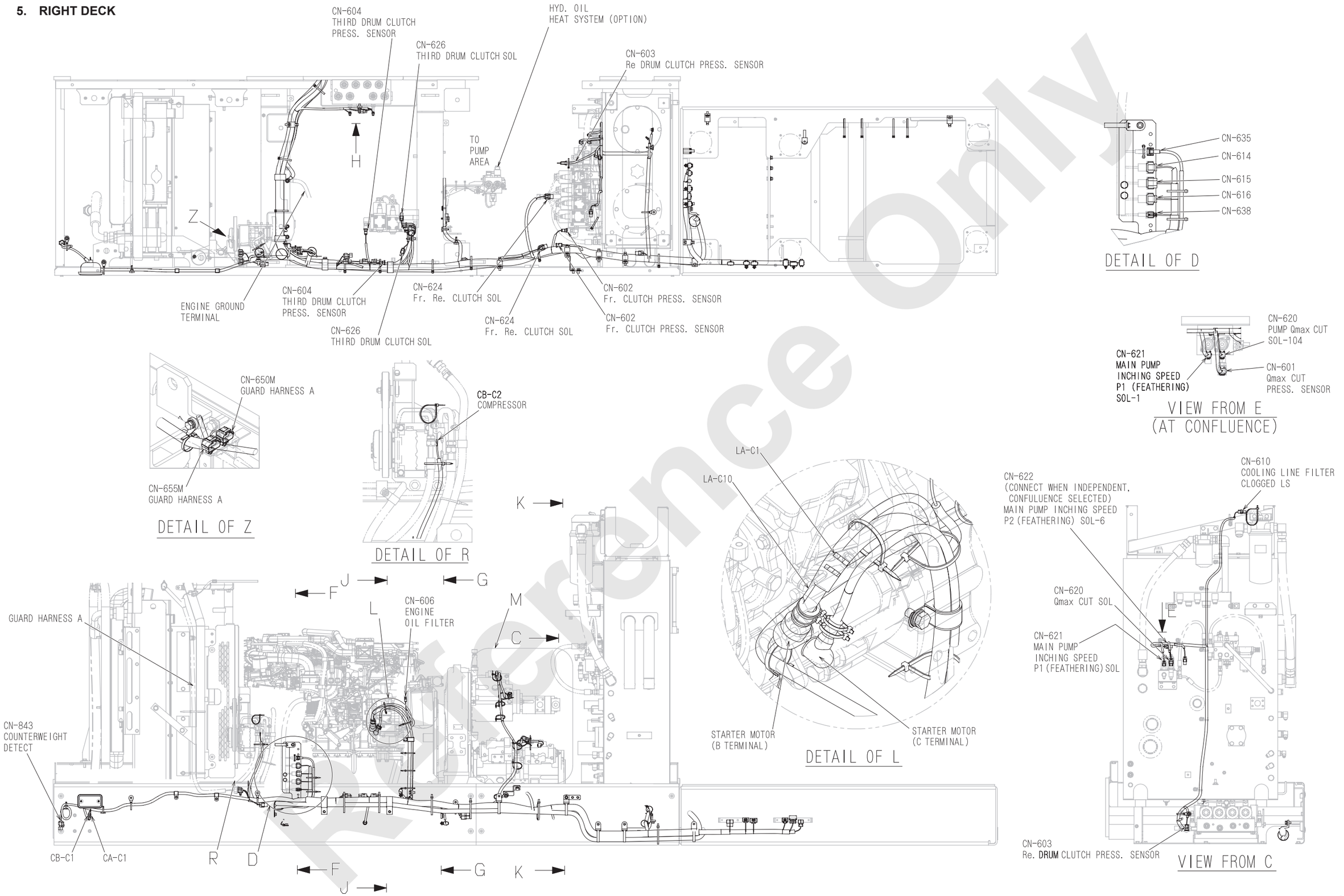

(1/4)

Reference Only

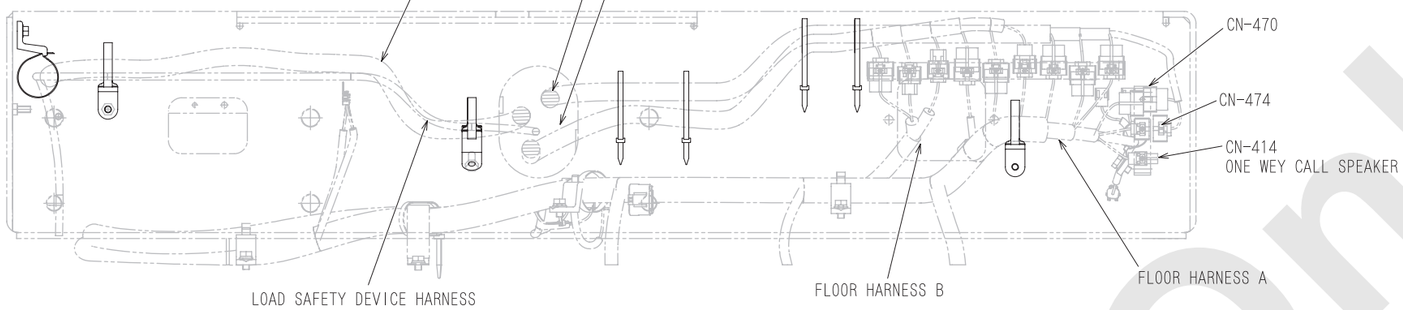

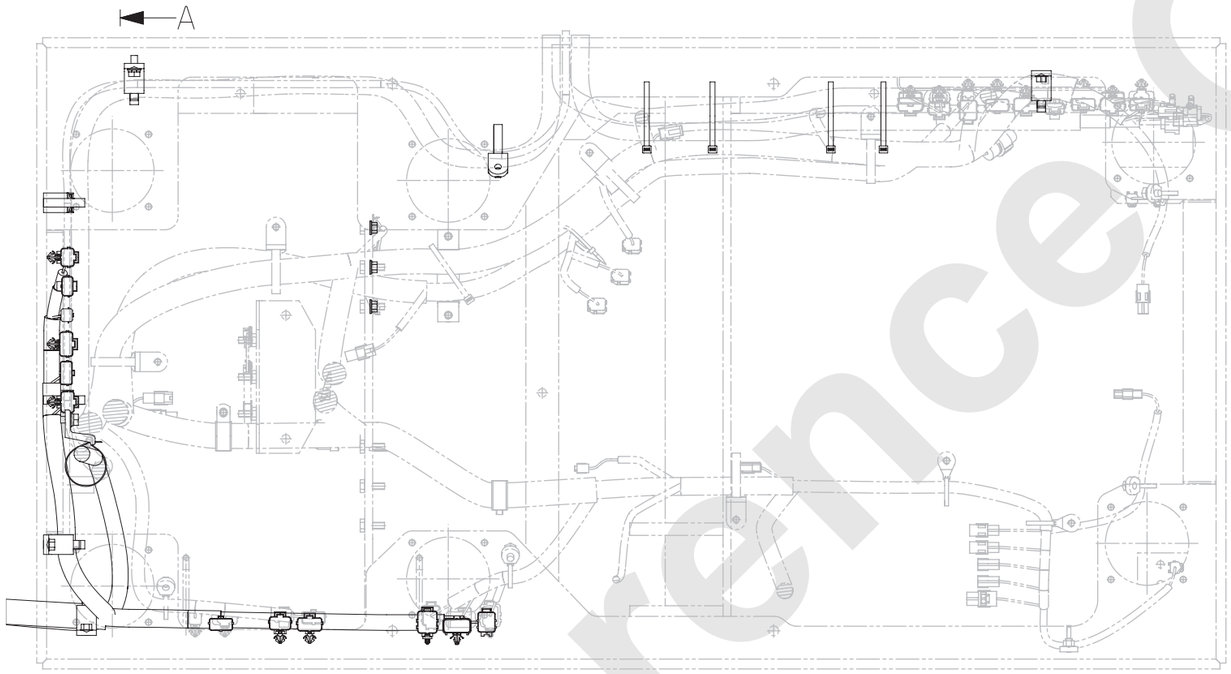

DETAIL OF CAB LOWER DECK

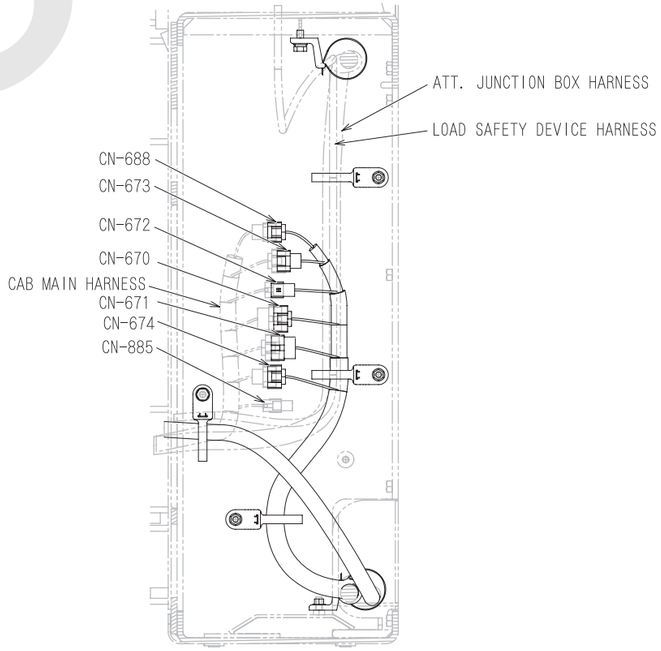

SECTION A-A

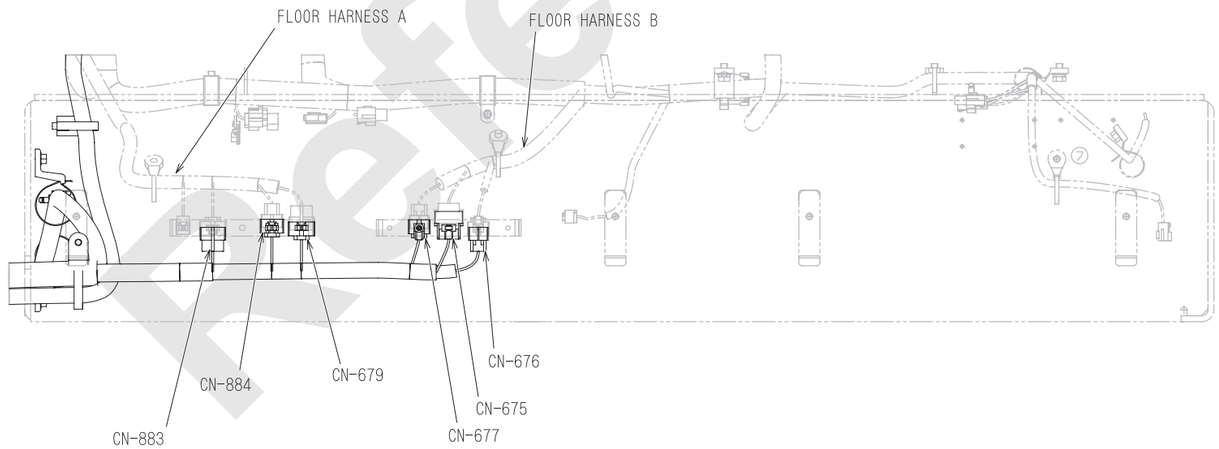

Reference Only

(2/4)

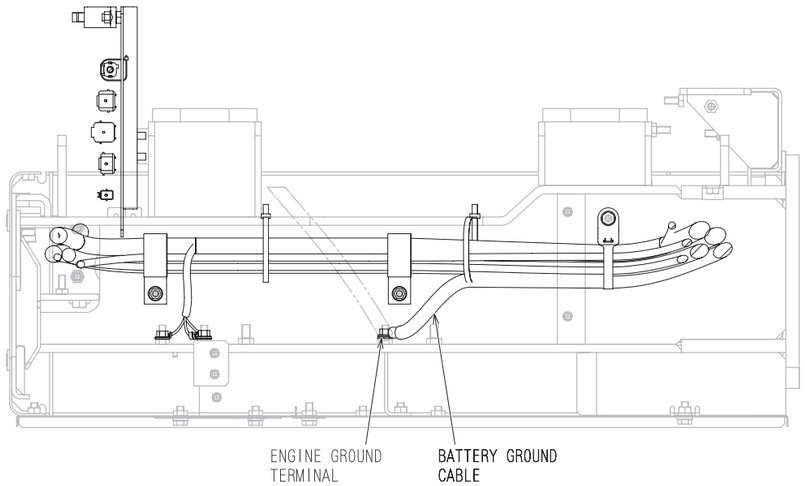

SECTION F-F

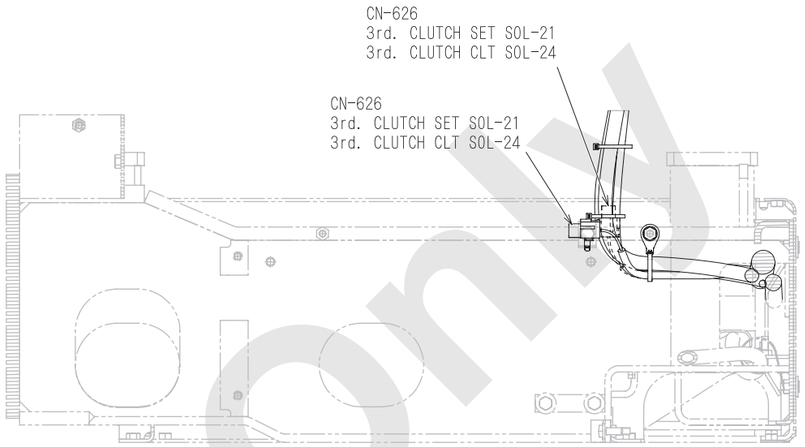

SECTION J-J

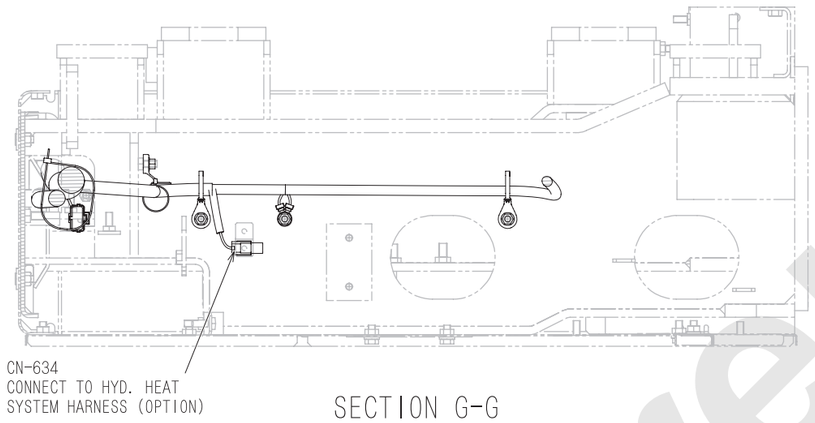

SECTION G-G

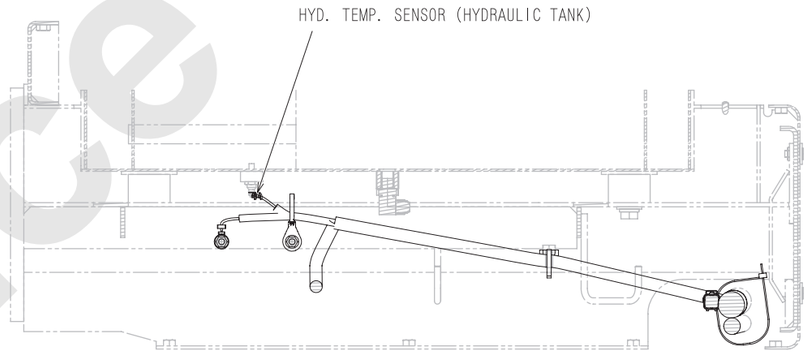

SECTION K-K

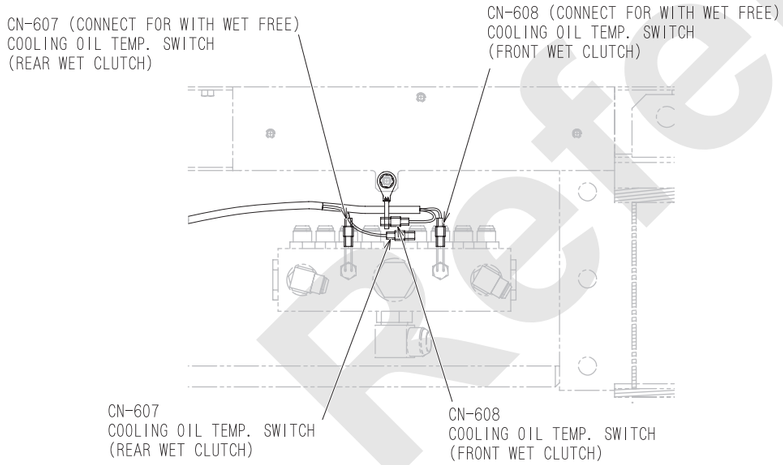

VIEW FROM H

Reference Only

(3/4)

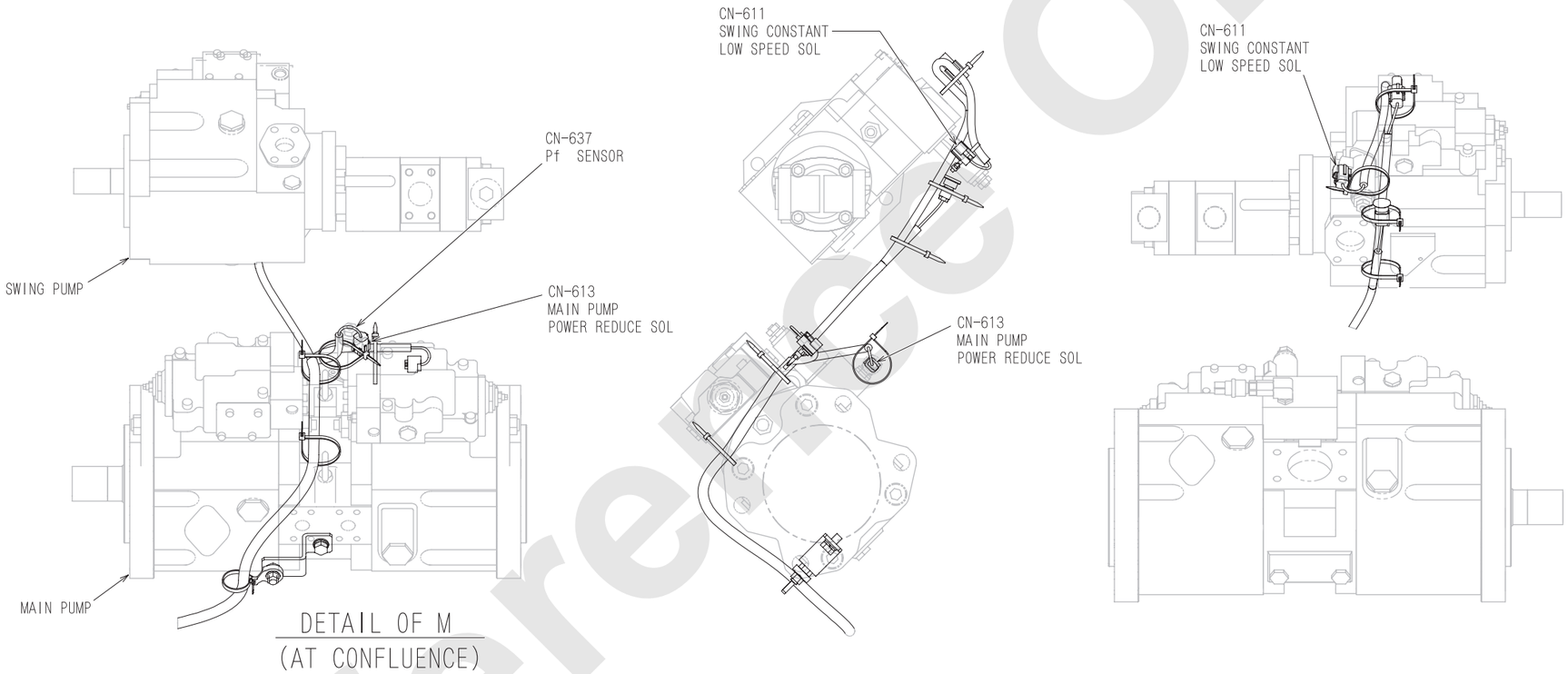

Reference Only

(4/4)

RIGHT DECK HARNESS (a)

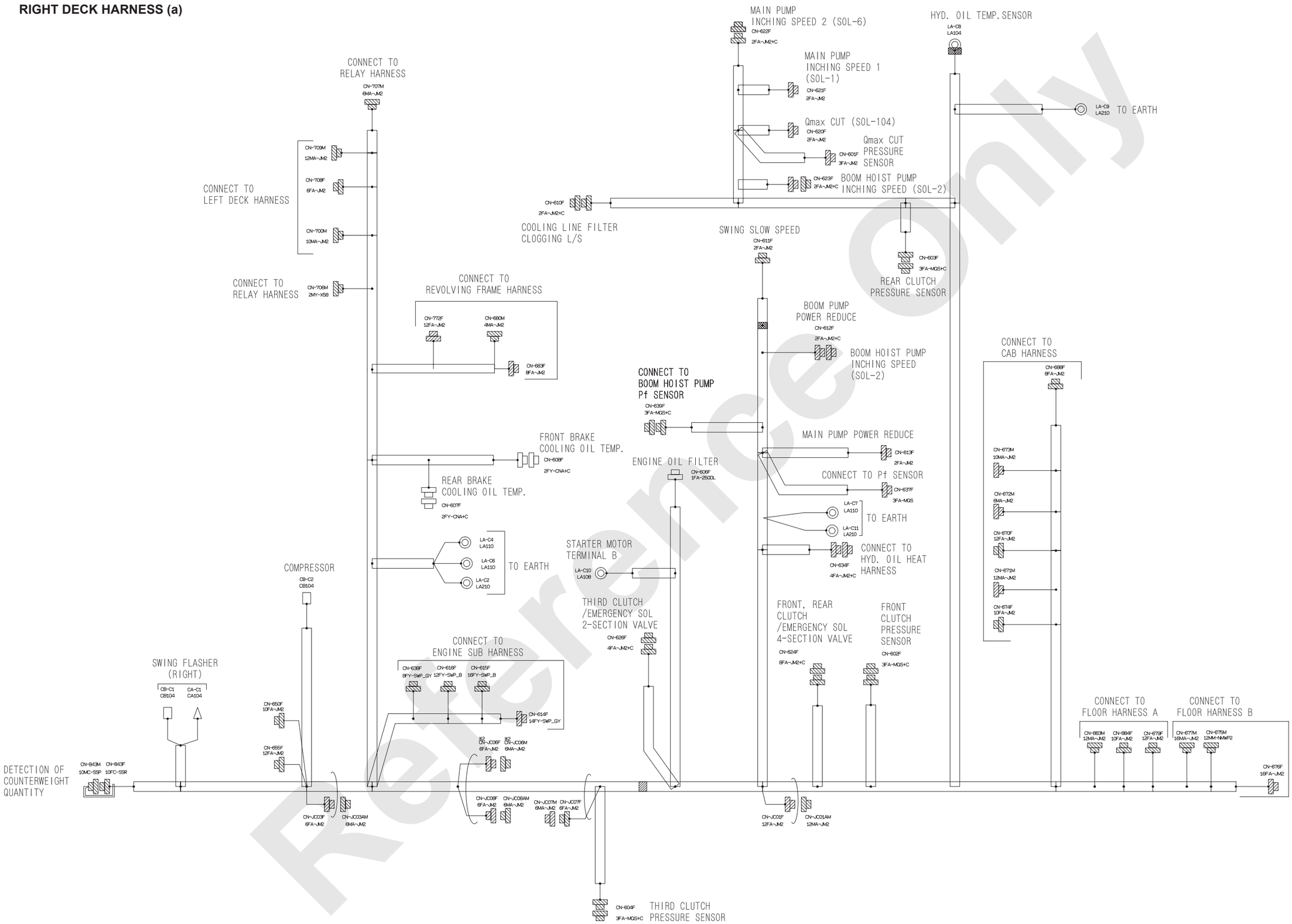

(1/5)

Reference Only

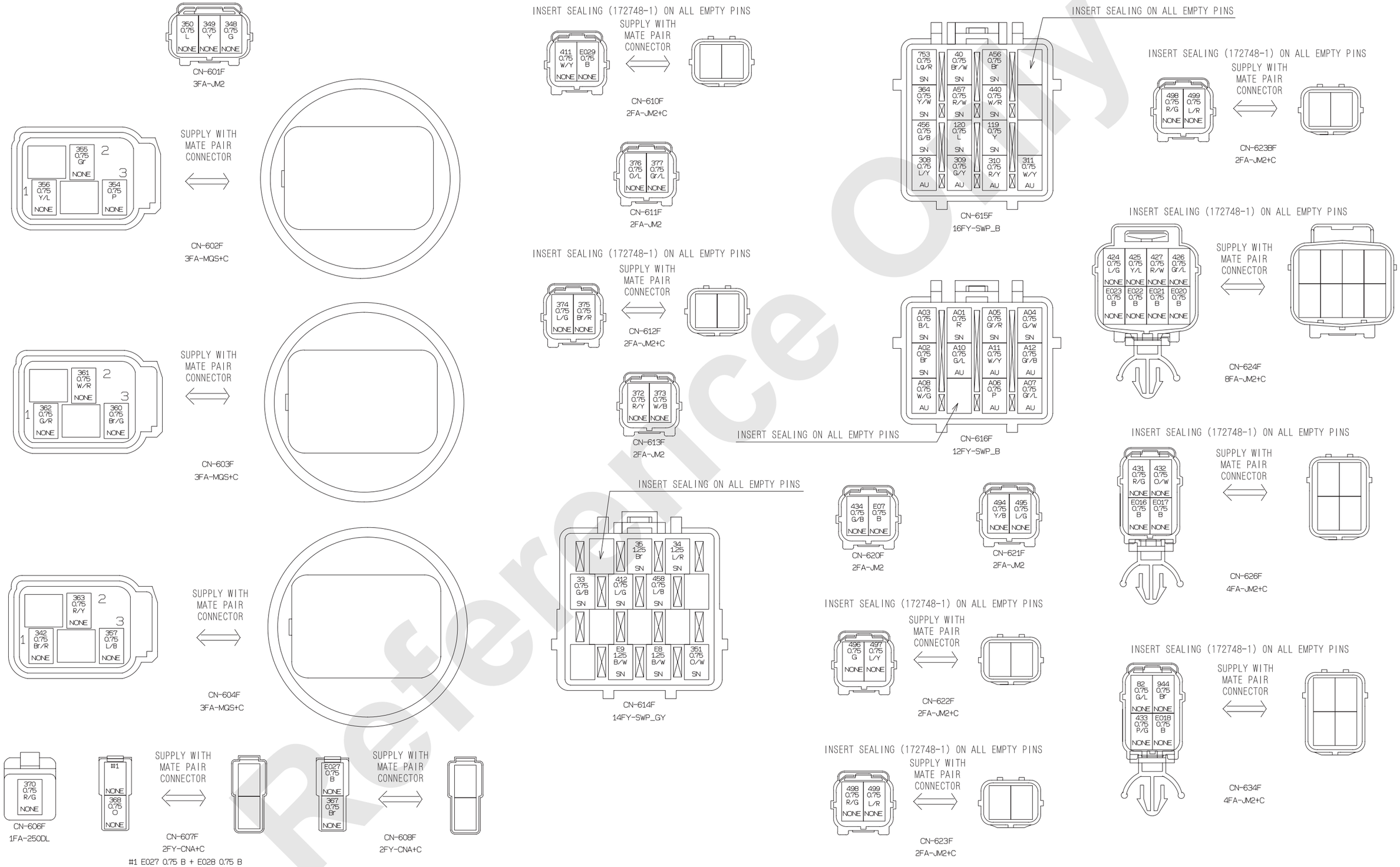

Reference Only

(2/5)

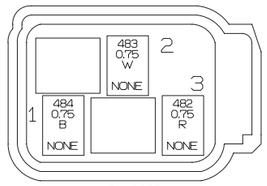

CN-637F
3FA-MQS

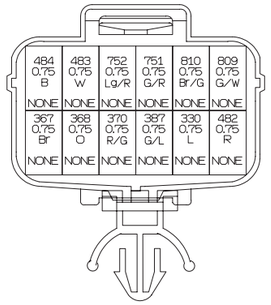

CN-670F
12FA-JM2

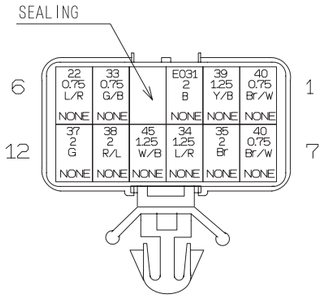

CN-675M
12MM-NMWP2

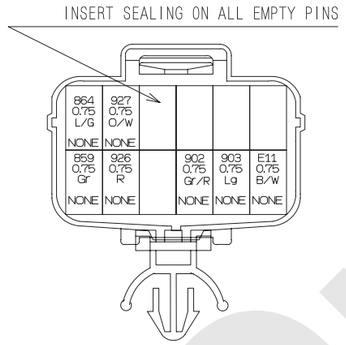

CN-679F
12FA-JM2

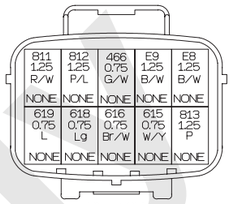

CN-700M
10MA-JM2

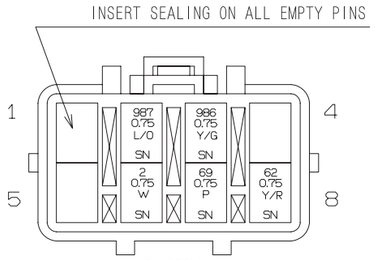

CN-638M
8MY-0902A

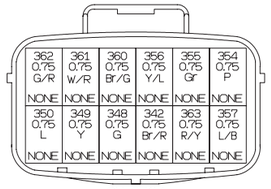

CN-671M
12MA-JM2

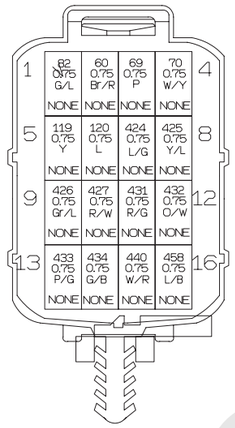

CN-676F
16FA-JM2

CN-680M
4MA-JM2

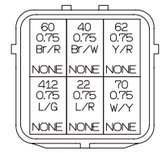

CN-707M
6MA-JM2

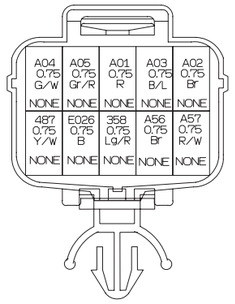

CN-650F
8FA-JM2

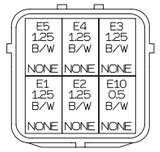

CN-672M
6MA-JM2

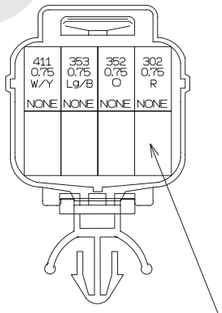

CN-688F
8FA-JM2

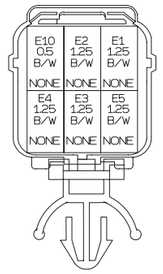

CN-708F
6FA-JM2

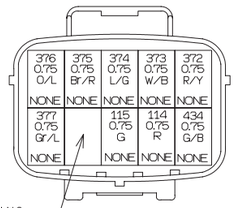

CN-673M
10MA-JM2

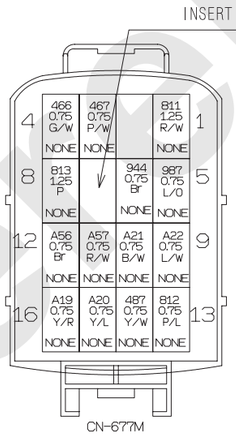

CN-677M
16MA-JM2

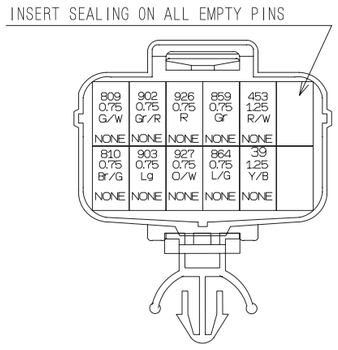

CN-772F
12FA-JM2

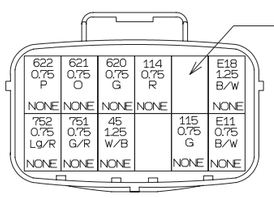

CN-709M
12MA-JM2

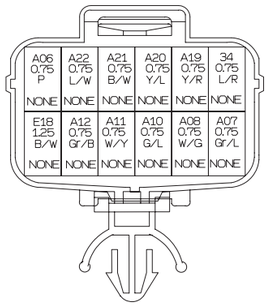

CN-655F
12FA-JM2

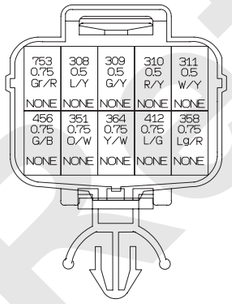

CN-674F
10FA-JM2

Reference Only

(3/5)

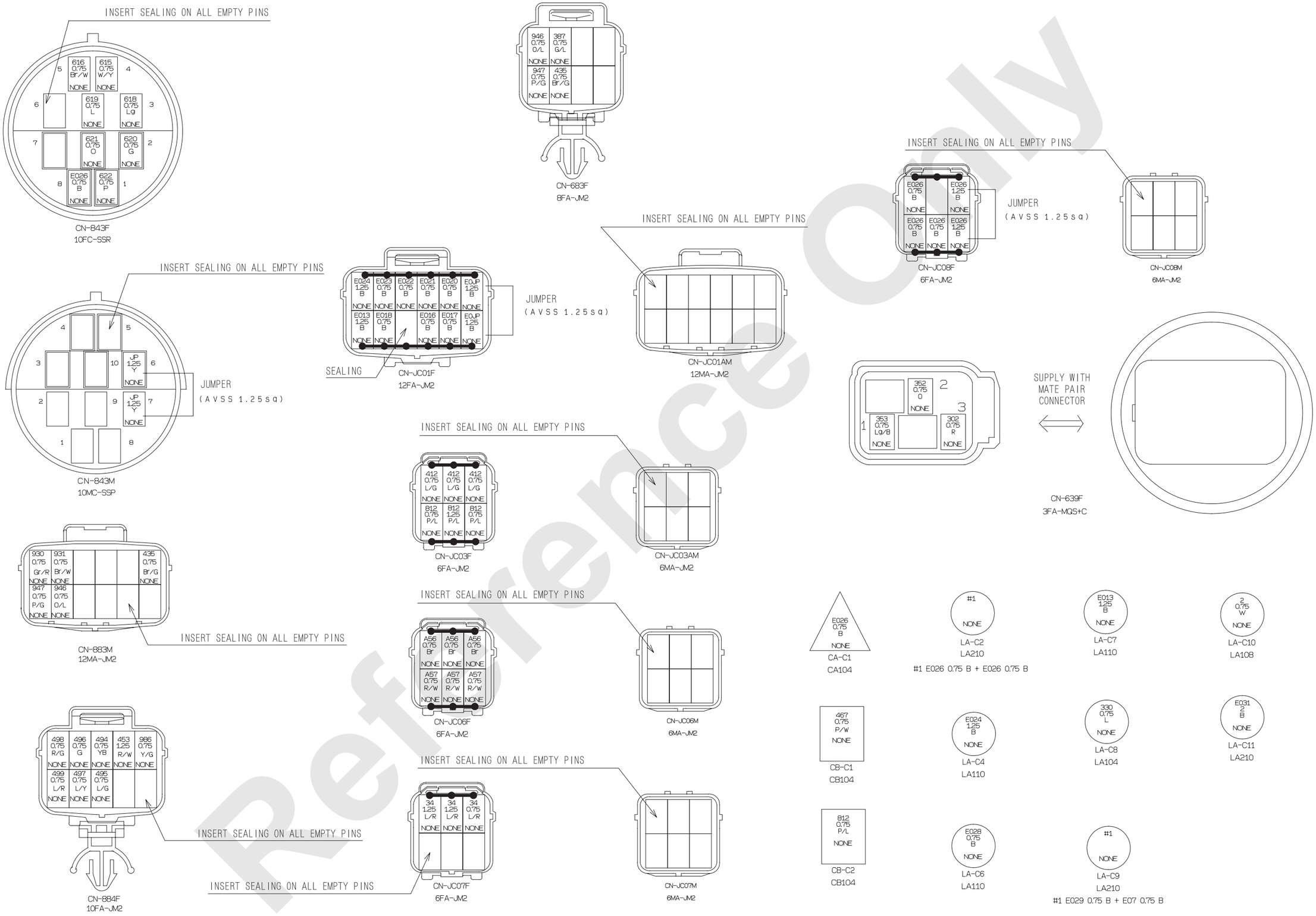

(4/5)

Reference Only

THE WIRE NO./COLOR LIST

※1 IDENTIFICATION SYMBOL
※2 TWO WIRE CONNECT NUMBER

WIRE NO.	WIRE COLOR	WIRE TYPE	SIZE	F R O M	※1	※2	CONNECTION	※2	※1	T O
2	W	AVSS	0.75	LA-C10						CN-638M
22	L/R	AVSS	0.75	CN-675M						CN-707M
33	G/B	AVSS	0.75	CN-614F						CN-675M
34	L/R	AVSS	1.25	CN-675M						CN-JC07F
34	L/R	AVSS	1.25	CN-614F						CN-JC07F
34	L/R	AVSS	0.75	CN-655F						CN-JC07F
35	Br	AVSS	1.25	CN-614F						CN-675M
37	G	AVS	2	CN-675M						CN-706M
38	R/L	AVS	2	CN-675M						CN-706M
39	Y/B	AVSS	1.25	CN-772F						CN-675M
40	Br/W	AVSS	0.75	CN-707M						CN-675M
40	Br/W	AVSS	0.75	CN-675M						CN-615F
45	W/B	AVSS	1.25	CN-709M						CN-675M
60	Br/R	AVSS	0.75	CN-676M						CN-707M
62	Y/R	AVSS	0.75	CN-707M						CN-638M
69	P	AVSS	0.75	CN-676F						CN-638M
70	W/Y	AVSS	0.75	CN-707M						CN-676F
82	G/L	AVSS	0.75	CN-634F						CN-676F
302	R	AVSS	0.75	CN-688F						CN-639F
308	L/Y	AVSS	0.5	CN-674F						CN-615F
309	G/Y	AVSS	0.5	CN-674F						CN-615F
310	R/Y	AVSS	0.5	CN-674F						CN-615F
311	W/Y	AVSS	0.5	CN-674F						CN-615F
330	L	AVSS	0.75	LA-C8						CN-670F
342	Br/R	AVSS	0.75	CN-671M						CN-604F
348	G	AVSS	0.75	CN-671M						CN-601F
349	Y	AVSS	0.75	CN-671M						CN-601F
350	L	AVSS	0.75	CN-671M						CN-601F
351	O/W	AVSS	0.75	CN-614F						CN-674F
352	O	AVSS	0.75	CN-688F						CN-639F
353	Lg/B	AVSS	0.75	CN-688F						CN-639F
354	P	AVSS	0.75	CN-671M						CN-602F
355	Gr	AVSS	0.75	CN-671M						CN-602F
356	Y/L	AVSS	0.75	CN-671M						CN-602F
357	L/B	AVSS	0.75	CN-671M						CN-604F
358	Lg/R	AVSS	0.75	CN-674F						CN-650F
360	Br/G	AVSS	0.75	CN-671M						CN-603F
361	W/R	AVSS	0.75	CN-671M						CN-603F
362	G/R	AVSS	0.75	CN-671M						CN-603F
363	R/Y	AVSS	0.75	CN-671M						CN-604F
364	Y/W	AVSS	0.75	CN-674F						CN-615F
367	Br	AVSS	0.75	CN-670F						CN-608F
368	O	AVSS	0.75	CN-670F						CN-607F
370	R/G	AVSS	0.75	CN-670F						CN-606F
387	G/L	AVSS	0.75	CN-670F						CN-683F
411	W/Y	AVSS	0.75	CN-688F						CN-610F
412	L/G	AVSS	0.75	CN-JC03F						CN-707M
412	L/G	AVSS	0.75	CN-JC03F						CN-674F
412	L/G	AVSS	0.75	CN-JC03F						CN-614F
424	L/G	AVSS	0.75	CN-624F						CN-676F
425	Y/L	AVSS	0.75	CN-624F						CN-676F
426	Gr/L	AVSS	0.75	CN-624F						CN-676F
427	R/W	AVSS	0.75	CN-624F						CN-676F
431	R/G	AVSS	0.75	CN-626F						CN-676F
432	O/W	AVSS	0.75	CN-626F						CN-676F
433	P/G	AVSS	0.75	CN-634F						CN-676F
434	G/B	AVSS	0.75	CN-673M						JS01
434	G/B	AVSS	0.75	CN-676F						JS01
434	G/B	AVSS	0.75	CN-620F						JS01
435	Br/G	AVSS	0.75	CN-883M						CN-683F
440	W/R	AVSS	0.75	CN-676F						CN-615F
453	R/W	AVSS	1.25	CN-884F						CN-772F
456	G/B	AVSS	0.75	CN-615F						CN-674F
458	L/B	AVSS	0.75	CN-614F						CN-676F
466	G/W	AVSS	0.75	CN-677M						CN-700M
467	P/W	AVSS	0.75	CB-C1						CN-677M
482	R	AVSS	0.75	CN-670F						CN-637F
483	W	AVSS	0.75	CN-670F						CN-637F
484	B	AVSS	0.75	CN-670F						CN-637F
487	Y/W	AVSS	0.75	CN-677M						CN-650F
615	W/Y	AVSS	0.75	CN-843F						CN-700M
616	Br/W	AVSS	0.75	CN-843F						CN-700M
618	Lg	AVSS	0.75	CN-843F						CN-700M
619	L	AVSS	0.75	CN-843F						CN-700M
620	G	AVSS	0.75	CN-843F						CN-709M
621	O	AVSS	0.75	CN-843F						CN-709M
622	P	AVSS	0.75	CN-843F						CN-709M
751	G/R	AVSS	0.75	CN-709M						CN-670F
752	Lg/R	AVSS	0.75	CN-709M						CN-670F
753	Gr/R	AVSS	0.75	CN-674F						CN-615F
809	G/W	AVSS	0.75	CN-772F						CN-670F
810	Br/G	AVSS	0.75	CN-772F						CN-670F
811	R/W	AVSS	1.25	CN-677M						CN-700M
812	P/L	AVSS	1.25	CN-JC03F						CN-700M
812	P/L	AVSS	0.75	CN-JC03F						CB-C2
812	P/L	AVSS	0.75	CN-JC03F						CN-677M
813	P	AVSS	1.25	CN-677M						CN-700M

WIRE NO.	WIRE COLOR	WIRE TYPE	SIZE	F R O M	※1	※2	CONNECTION	※2	※1	T O
										CN-677M
859	Gr	AVSS	0.75	CN-772F						CN-679F
864	L/G	AVSS	0.75	CN-772F						CN-679F
902	Gr/R	AVSS	0.75	CN-679F						CN-772F
903	Lg	AVSS	0.75	CN-679F						CN-772F
926	R	AVSS	0.75	CN-772F						CN-679F
927	O/W	AVSS	0.75	CN-772F						CN-679F
930	Gr/R	AVSS	0.75	CN-680M						CN-883M
931	Br/W	AVSS	0.75	CN-680M						CN-883M
944	Br	AVSS	0.75	CN-634F						CN-677M
946	O/L	AVSS	0.75	CN-883M						CN-683F
947	P/G	AVSS	0.75	CN-883M						CN-683F
986	Y/G	AVSS	0.75	CN-638M						CN-884F
987	L/O	AVSS	0.75	CN-638M						CN-677M
A01	R	AVSS	0.75	CN-616F						CN-650F
A02	Br	AVSS	0.75	CN-616F						CN-650F
A03	B/L	AVSS	0.75	CN-616F						CN-650F
A04	G/W	AVSS	0.75	CN-616F						CN-650F
A05	Gr/R	AVSS	0.75	CN-616F						CN-650F
A06	P	AVSS	0.75	CN-616F						CN-655F
A07	Gr/L	AVSS	0.75	CN-616F						CN-655F
A08	W/G	AVSS	0.75	CN-616F						CN-655F
A10	G/L	AVSS	0.75	CN-616F						CN-655F
A11	W/Y	AVSS	0.75	CN-616F						CN-655F
A12	Gr/B	AVSS	0.75	CN-616F						CN-655F
114	R	AVSS	0.75	CN-673M	TWSTO.75TW1				TWSTO.75TW1	CN-709M
115	G	AVSS	0.75	CN-673M	TWSTO.75TW1				TWSTO.75TW1	CN-709M
119	Y	AVSS	0.75	CN-615F	TWSTO.75TW2				TWSTO.75TW2	CN-676F
120	L	AVSS	0.75	CN-615F	TWSTO.75TW2				TWSTO.75TW2	CN-676F
372	R/Y	AVSS	0.75	CN-673M	TWSTO.75TW3				TWSTO.75TW3	CN-613F
373	W/B	AVSS	0.75	CN-673M	TWSTO.75TW3				TWSTO.75TW3	CN-613F
374	L/G	AVSS	0.75	CN-673M	TWSTO.75TW4				TWSTO.75TW4	CN-612F
375	Br/R	AVSS	0.75	CN-673M	TWSTO.75TW4				TWSTO.75TW4	CN-612F
376	O/L	AVSS	0.75	CN-611F	TWSTO.75TW5				TWSTO.75TW5	CN-673M
377	Gr/L	AVSS	0.75	CN-611F	TWSTO.75TW5				TWSTO.75TW5	CN-673M
494	Y/B	AVSS	0.75	CN-621F	TWSTO.75TW6				TWSTO.75TW6	CN-884F
495	L/G	AVSS	0.75	CN-621F	TWSTO.75TW6				TWSTO.75TW6	CN-884F
496	G	AVSS	0.75	CN-622F	TWSTO.75TW7				TWSTO.75TW7	CN-884F
497	L/Y	AVSS	0.75	CN-622F	TWSTO.75TW7				TWSTO.75TW7	CN-884F
498	R/G	AVSS	0.75	CN-884F	TWSTO.75TW8				TWSTO.75TW8	CN-623F
499	L/R	AVSS	0.75	CN-884F	TWSTO.75TW8				TWSTO.75TW8	CN-623F
A19	Y/R	AVSS	0.75	CN-655F	TWSTO.75TW9				TWSTO.75TW9	CN-677M
A20	Y/L	AVSS	0.75	CN-655F	TWSTO.75TW9				TWSTO.75TW9	CN-677M
A21	B/W	AVSS	0.75	CN-655F	TWSTO.75TW10				TWSTO.75TW10	CN-677M
A22	L/W	AVSS	0.75	CN-655F	TWSTO.75TW10				TWSTO.75TW10	CN-677M
A56	Br	AVSS	0.75	CN-615F	TWSTO.75TW11				TWSTO.75TW11	CN-JC06F
A57	R/W	AVSS	0.75	CN-615F	TWSTO.75TW11				TWSTO.75TW11	CN-JC06F
A56	Br	AVSS	0.75	CN-650F	TWSTO.75TW12				TWSTO.75TW12	CN-JC06F
A57	R/W	AVSS	0.75	CN-650F	TWSTO.75TW12				TWSTO.75TW12	CN-JC06F
A56	Br	AVSS	0.75	CN-677M	TWSTO.75TW13				TWSTO.75TW13	CN-JC06F
A57	R/W	AVSS	0.75	CN-677M	TWSTO.75TW13				TWSTO.75TW13	CN-JC06F
E07	B	AVSS	0.75	LA-C9		DSC3				CN-620F
E029	B	AVSS	0.75	LA-C9		DSC3				CN-610F
E013	B	AVSS	1.25	CN-JC01F						LA-C7
E016	B	AVSS	0.75	CN-JC01F						CN-626F
E017	B	AVSS	0.75	CN-JC01F						CN-626F
E018	B	AVSS	0.75	CN-JC01F						CN-634F
EOJP	B	AVSS	1.25	CN-JC01F						CN-JC01F
E020	B	AVSS	0.75	CN-624F						CN-JC01F
E021	B	AVSS	0.75	CN-624F						CN-JC01F
E022	B	AVSS	0.75	CN-624F						CN-JC01F
E023	B	AVSS	0.75	CN-624F						CN-JC01F
E024	B	AVSS	1.25	LA-C4						CN-JC01F
E026	B	AVSS	0.75	CN-650F						CN-JC08F
E026	B	AVSS	1.25	CN-JC08F						CN-JC08F
E026	B	AVSS	0.75	CN-JC08F						CA-C1
E026	B	AVSS	0.75	CN-JC08F				DSC1		LA-C2
E026	B	AVSS	0.75	CN-843F				DSC1		LA-C2
E027	B	AVSS	0.75	CN-608F				DSC6		CN-607F
E028	B	AVSS	0.75	LA-C6				DSC6		CN-607F
E031	B	AVS	2	LA-C11						CN-675M
E1	B/W	AVSS	1.25	CN-708F						CN-672M
E2	B/W	AVSS	1.25	CN-708F						CN-672M
E3	B/W	AVSS	1.25	CN-708F						CN-672M
E4	B/W	AVSS	1.25	CN-708F						CN-672M
E5	B/W	AVSS	1.25	CN-708F						CN-672M
E8	B/W	AVSS	1.25	CN-700M						CN-614F
E9	B/W	AVSS	1.25	CN-700M						CN-614F
E10	B/W	AVSS	0.5	CN-672M						CN-708F
E11	B/W	AVSS	0.75	CN-709M						CN-679F
E18	B/W	AVSS	1.25	CN-655F						CN-709M

(5/5)

Reference Only

RIGHT DECK HARNESS (b)

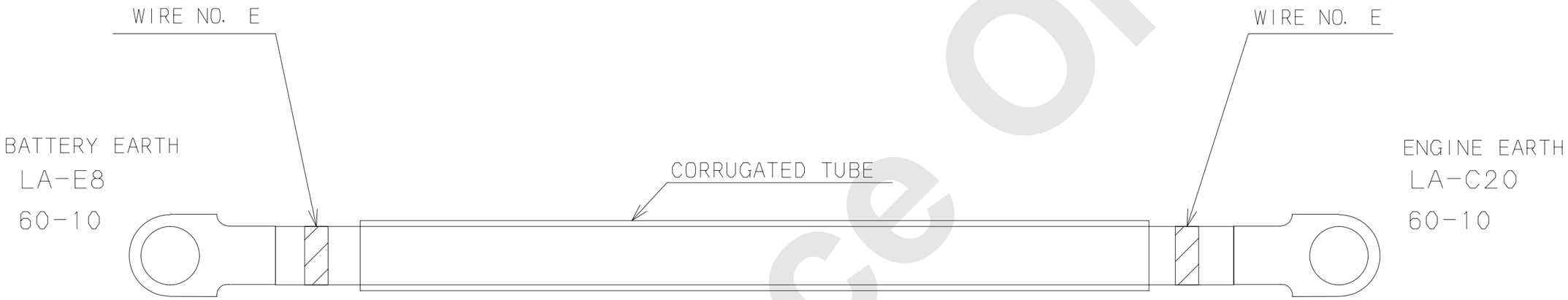

WIRE No. AND WIRE COLOR LIST

WIRE No.	COLOR	TYPE	SIZE	F R O M	2-WIRE CLAMP	CONNECTION	2-WIRE CLAMP	T O
E-STD	B	AV	60	LA-E4		————		LA-E5

Reference Only

POWER SUPPLY HARNESS

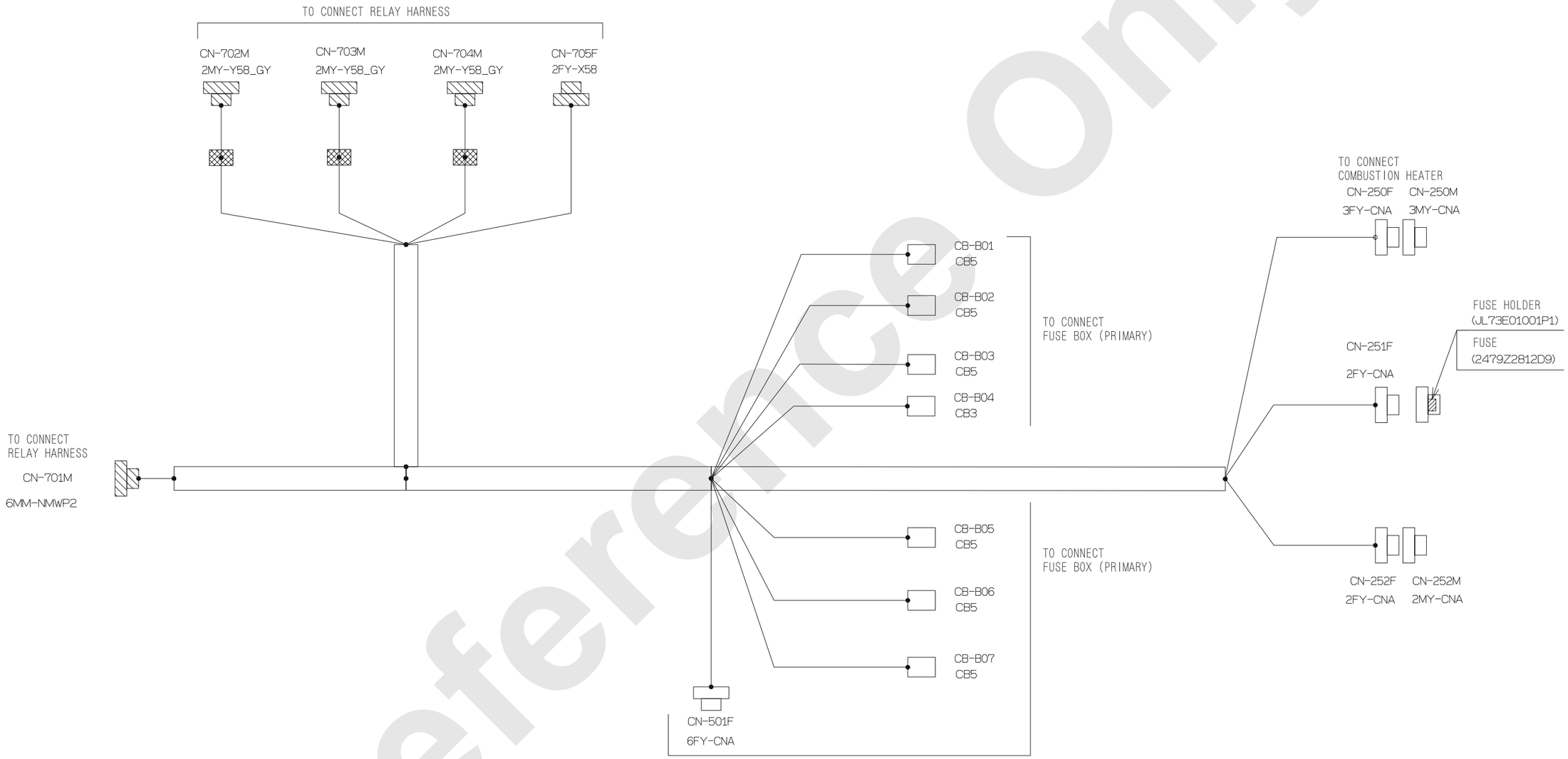

Reference Only

(1/2)

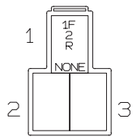

CN-250F
3FY-CNA

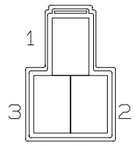

CN-250M
3MY-CNA

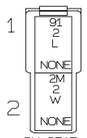

CN-251F
2FY-CNA

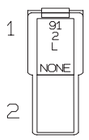

CN-252F
2FY-CNA

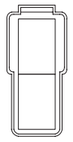
CN-252M
2MY-CNA

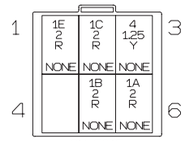

CN-501F
6FY-CNA

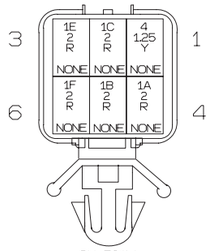

CN-701M
6MM-NMWP2

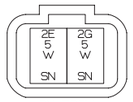

CN-702M
2MY-Y58_GY

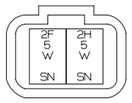

CN-703M
2MY-Y58_GY

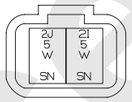

CN-704M
2MY-Y58_GY

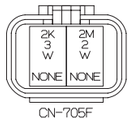

CN-705F
2FY-X58

CB-B01
CB5

CB-B02
CB5

CB-B03
CB5

CB-B04
CB3

CB-B05
CB5

CB-B06
CB5

CB-B07
CB5

THE WIRE NO./COLOR LIST

※1 IDENTIFICATION SYMBOL
※2 TWO WIRE CONNECT NUMBER

WIRE NO.	WIRE COLOR	WIRE TYPE	SIZE	F R O M	※1	※2	CONNECTION	※2	※1	T O
1A	R	AVS	2	CN-501F						CN-701M
1B	R	AVS	2	CN-501F						CN-701M
1C	R	AVS	2	CN-501F						CN-701M
1E	R	AVS	2	CN-501F						CN-701M
1F	R	AVS	2	CN-250F						CN-701M
2E	W	AVS	5	CB-B07						CN-702M
2G	W	AVS	5	CB-B06						CN-702M
2H	W	AVS	5	CB-B03						CN-703M
2I	W	AVS	5	CB-B01						CN-704M
2J	W	AVS	5	CB-B02						CN-704M
2K	W	AVS	3	CB-B04						CN-705F
2L	W	AVS	2	CN-705F						CN-251F
4	Y	AVSS	1.25	CN-501F						CN-701M
91	L	AVS	2	CN-252F						CN-251F

Reference Only

(2/2)

STARTER (TERMINAL B) TO BATTERY RELAY

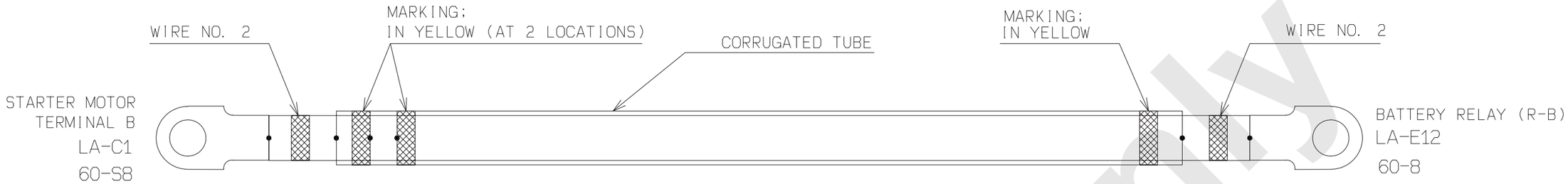

THE WIRE NO./COLOR LIST

WIRE NO.	WIRE COLOR	WIRE TYPE	SIZE	F R O M	IDENTIFICATION SYMBOL	2WIRE CONNECT NO	CONNECTION	2WIRE CONNECT NO	IDENTIFICATION SYMBOL	T O
2	B	AV	60	LA-E12						LA-C1

STARTER (TERMINAL C) TO SAFETY RELAY

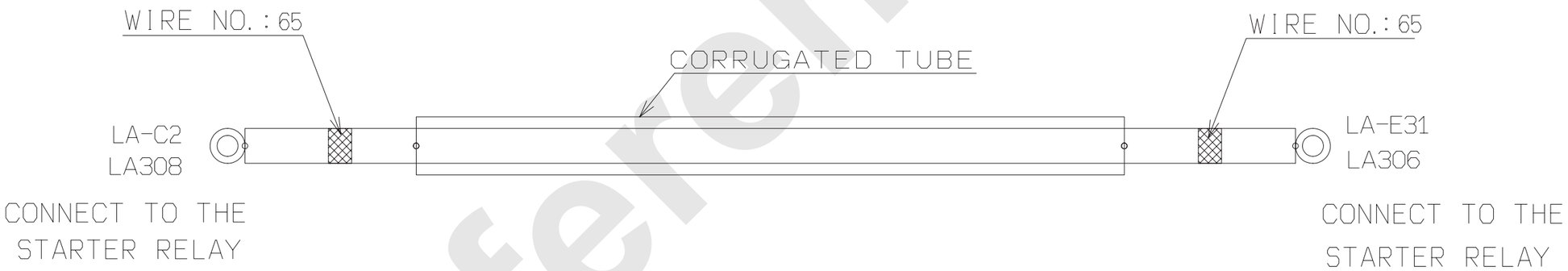

THE WIRE NO./COLOR LIST

WIRE NO.	WIRE COLOR	WIRE TYPE	SIZE	F R O M	IDENTIFICATION SYMBOL	2WIRE CONNECT NO	CONNECTION	2WIRE CONNECT NO	IDENTIFICATION SYMBOL	T O
65	W	AV	8	LA-C2						LA-E31

Reference Only

6. RIGHT DECK (GUARD)

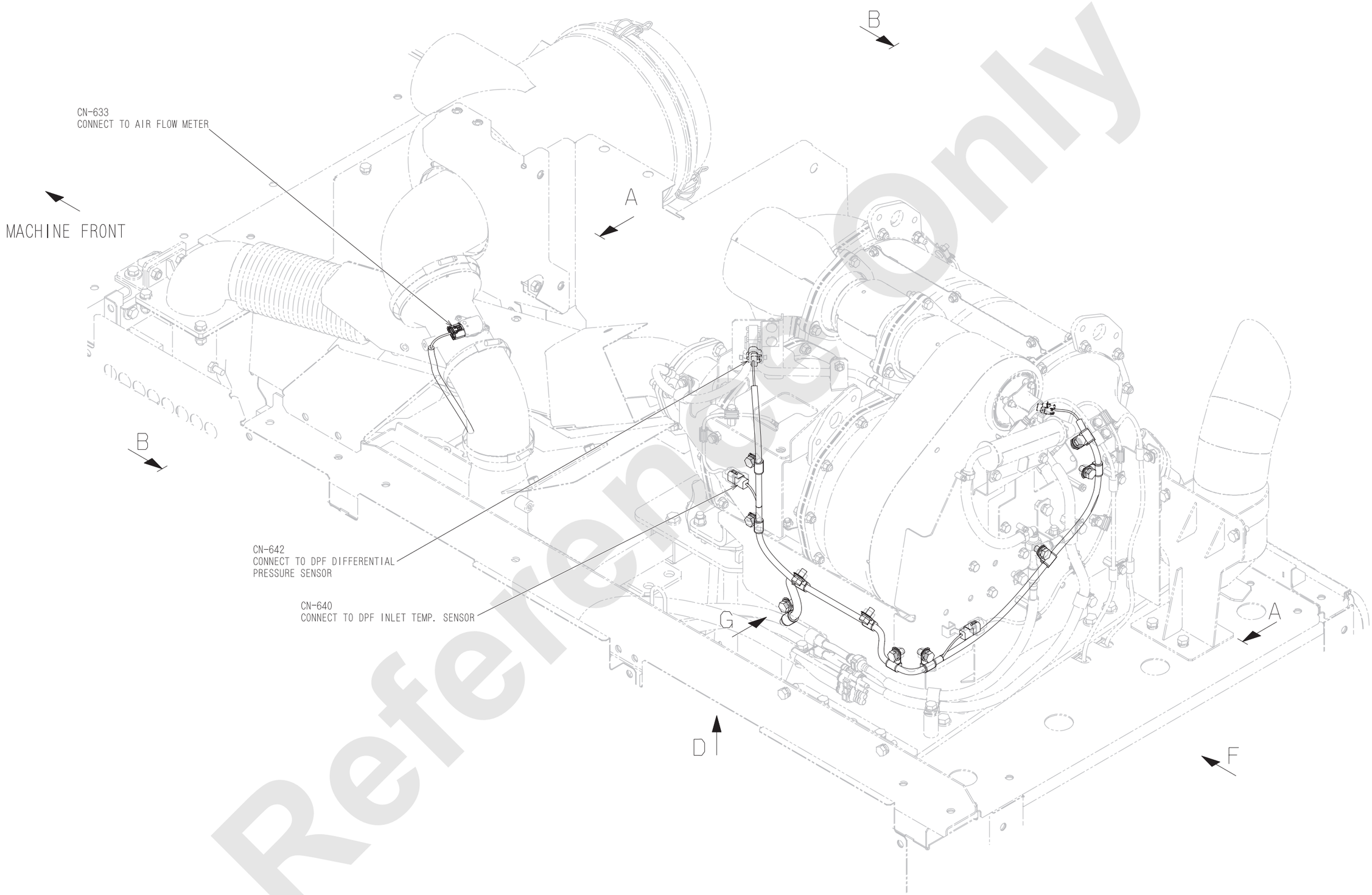

Reference Only

(1/3)

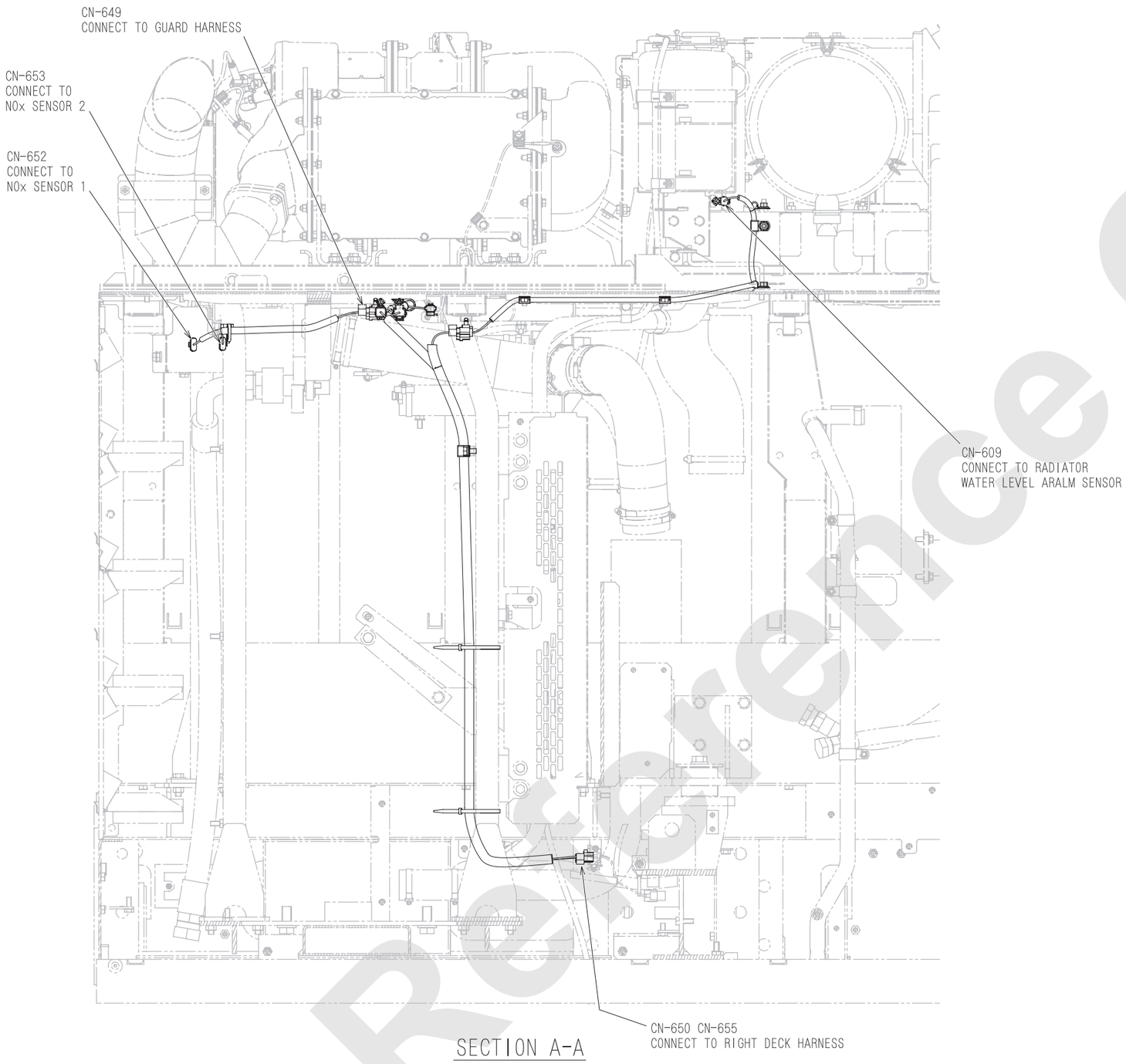

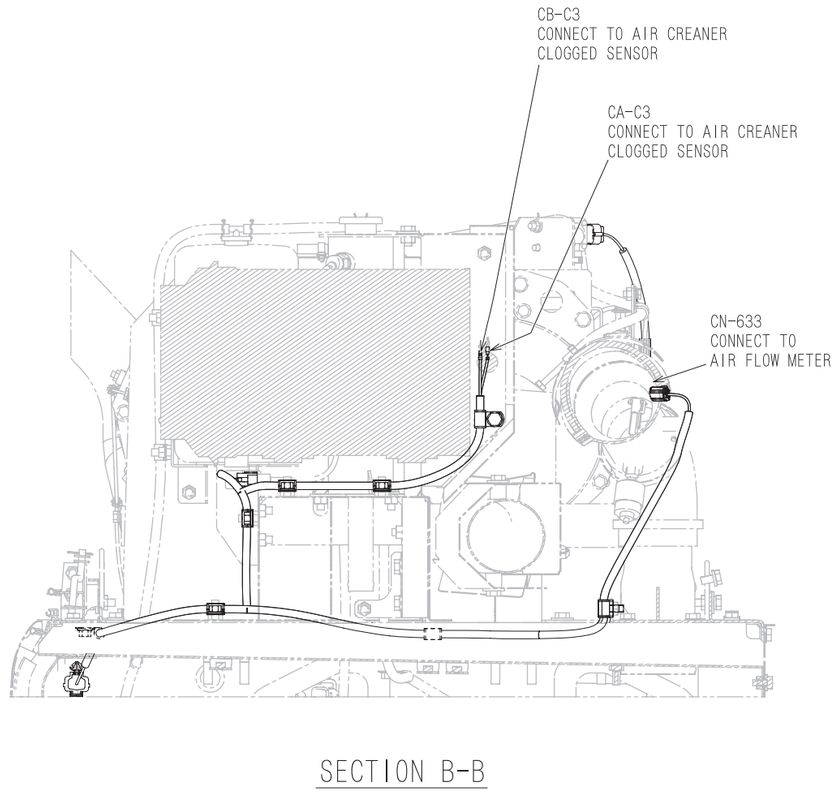

Reference Only

(2/3)

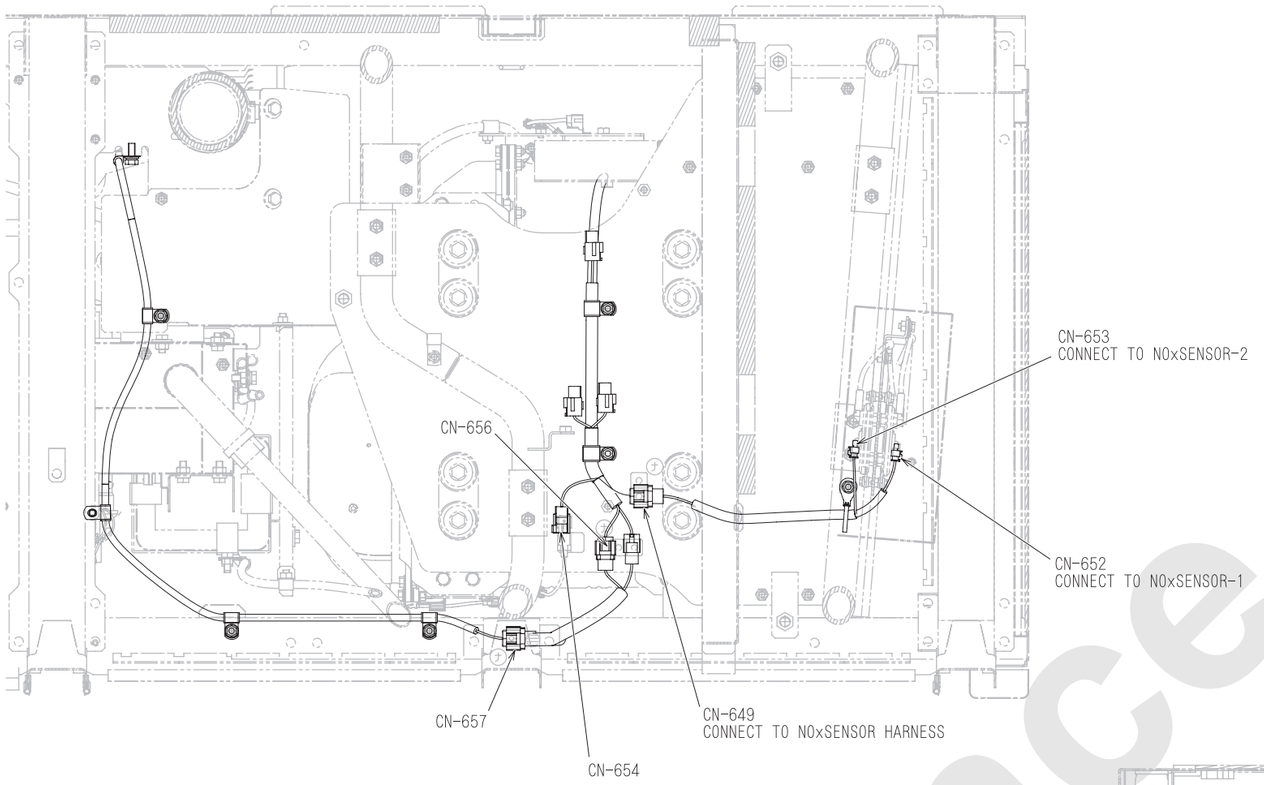

VIEW FROM D

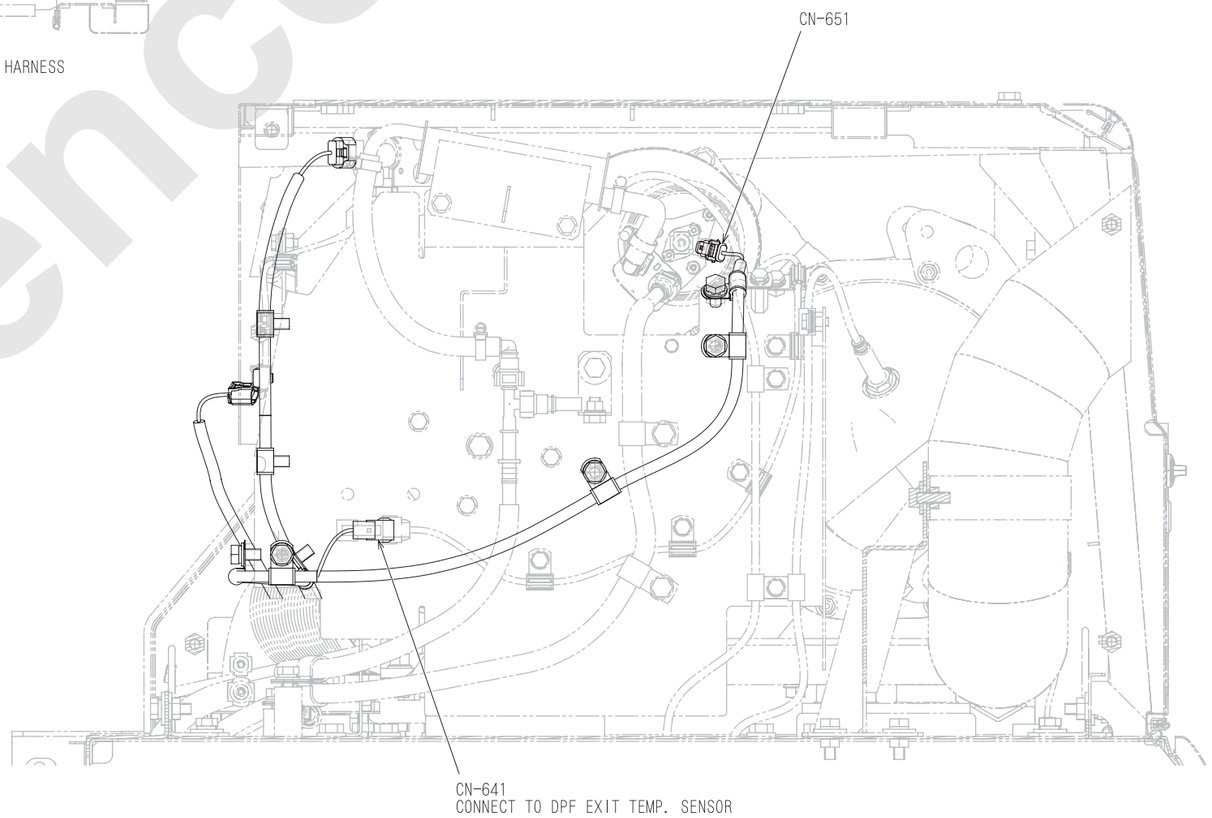

VIEW FROM F

(3/3)

Reference Only

GUARD HARNESS (a)

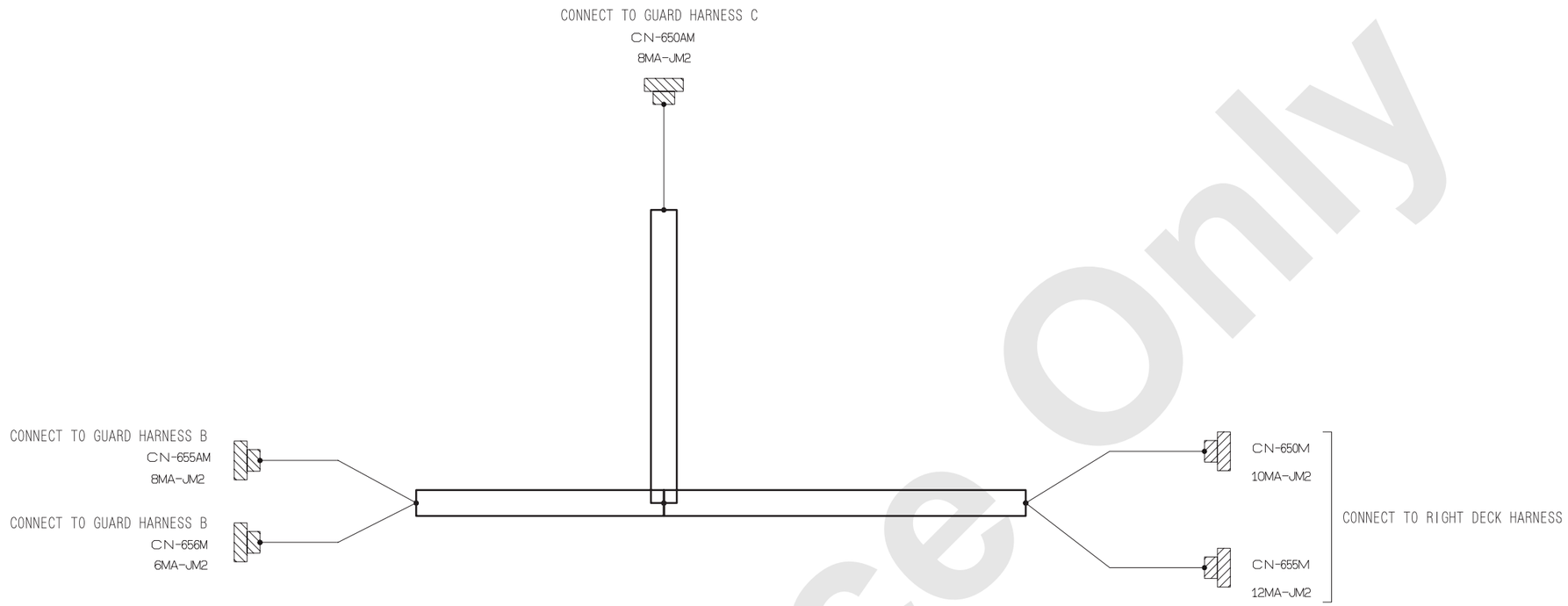

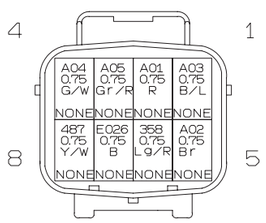

CN-650AM
8MA-JM2

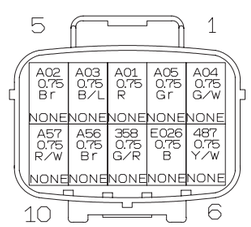

CN-650M
10MA-JM2

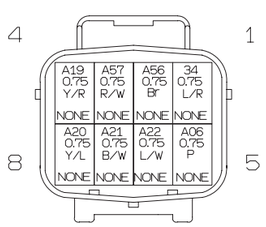

CN-655AM
8MA-JM2

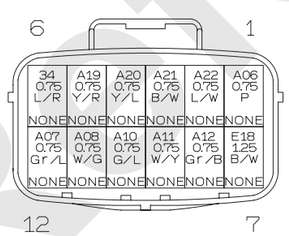

CN-655M
12MA-JM2

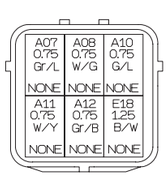

CN-656M
6MA-JM2

THE WIRE NO. /COLOR LIST

WIRE NO.	WIRE COLOR	WIRE TYPE	SIZE	F R O M	※1	※2	CONNECTION	※2	※1	T O
34	L/R	AVSS	0.75	CN-655AM						CN-655M
358	Lg/R	AVSS	0.75	CN-650AM						CN-650M
487	Y/W	AVSS	0.75	CN-650AM						CN-650M
A01	R	AVSS	0.75	CN-650AM						CN-650M
A02	Br	AVSS	0.75	CN-650AM						CN-650M
A03	B/L	AVSS	0.75	CN-650AM						CN-650M
A04	G/W	AVSS	0.75	CN-650AM						CN-650M
A05	Gr/R	AVSS	0.75	CN-650AM						CN-650M
A06	P	AVSS	0.75	CN-655AM						CN-655M
A07	Gr/L	AVSS	0.75	CN-656M						CN-655M
A08	W/G	AVSS	0.75	CN-656M						CN-655M
A10	G/L	AVSS	0.75	CN-656M						CN-655M
A11	W/Y	AVSS	0.75	CN-656M						CN-655M
A12	Gr/B	AVSS	0.75	CN-656M						CN-655M
A19	Y/R	AVSS	0.75	CN-655AM						CN-655M
A20	Y/L	AVSS	0.75	CN-655AM						CN-655M
A21	B/W	AVSS	0.75	CN-655AM						CN-655M
A22	L/W	AVSS	0.75	CN-655AM						CN-655M
A56	Br	AVSS	0.75	CN-655AM						CN-655M
A57	R/W	AVSS	0.75	CN-655AM						CN-655M
E026	B	AVSS	0.75	CN-650AM						CN-650M
E18	B/W	AVSS	1.25	CN-656M						CN-655M

※1 PIN NUMBER
※2 TWO WIRE CONNECT NUMBER

Reference Only

GUARD HARNESS (b)

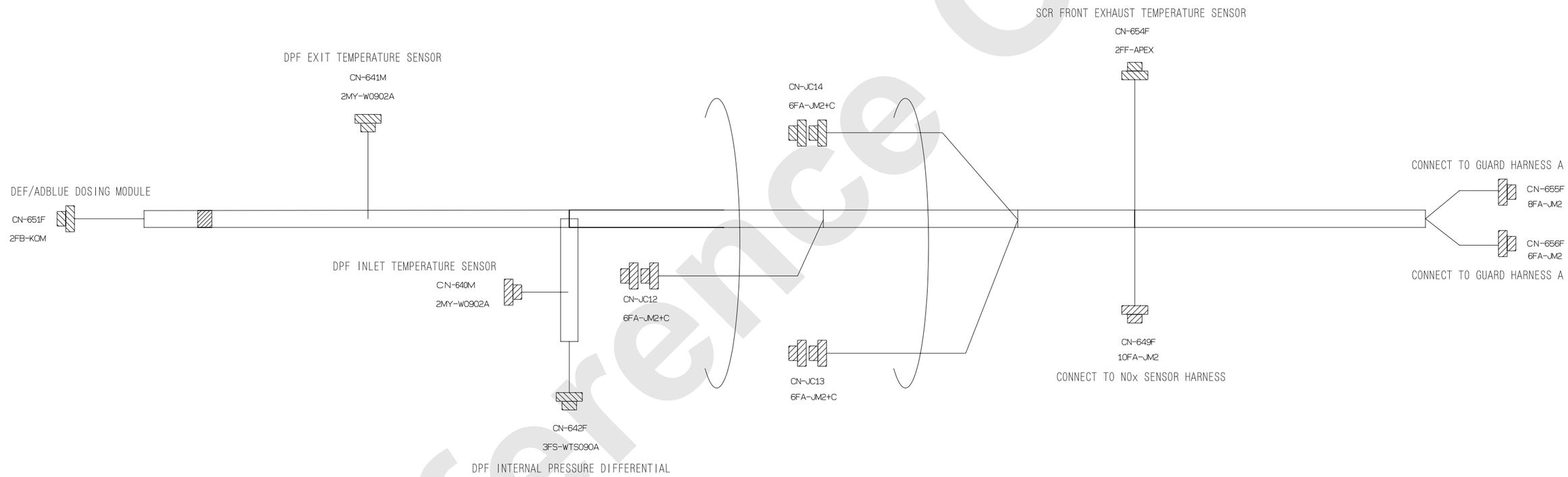

(1/2)

Reference Only

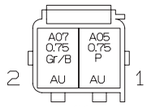

CN-640M
2MY-W0902A

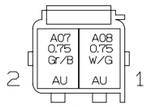

CN-641M
2MY-W0902A

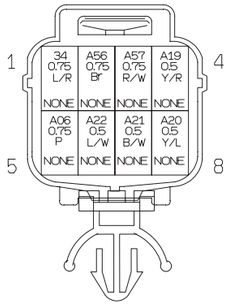

CN-655F
8FA-JM2

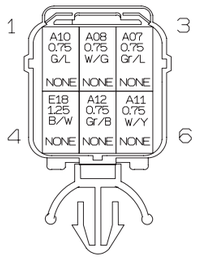

CN-656F
6FA-JM2

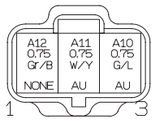

CN-642F
3FS-WTS090A

INSERT SEALING (2822357-1) ON ALL EMPTY PINS

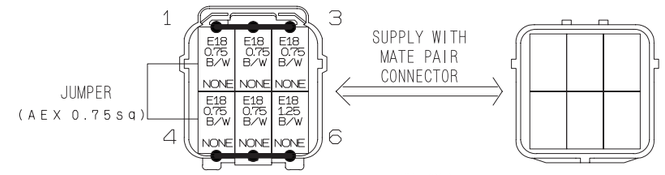

CN-JC12
6FA-JM2+C

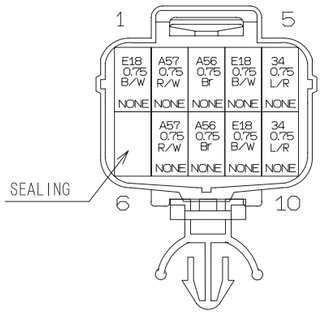

CN-649F
10FA-JM2

INSERT SEALING (2822357-1) ON ALL EMPTY PINS

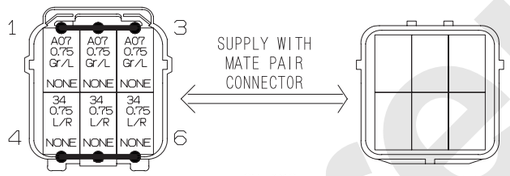

CN-JC13
6FA-JM2+C

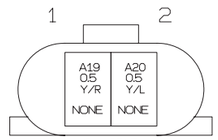

CN-651F
2FB-KOM

INSERT SEALING (2822357-1) ON ALL EMPTY PINS

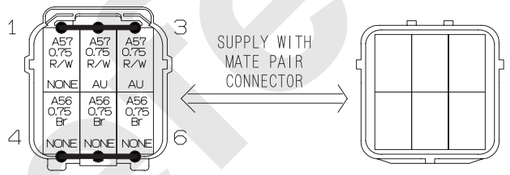

CN-JC14
6FA-JM2+C

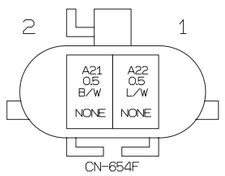

CN-654F
2FF-APEX

THE WIRE NO. /COLOR LIST

WIRE NO.	WIRE COLOR	WIRE TYPE	SIZE	F R O M	※1	※2	CONNECTION	※2	※1	T O
34	L/R	AEX	0.75	CN-655F						CN-JC13F
34	L/R	AEX	0.75	CN-649F						CN-JC13F
34	L/R	AEX	0.75	CN-649F						CN-JC13F
A07	Gr/L	AEX	0.75	CN-640M						CN-JC13F
A07	Gr/L	AEX	0.75	CN-656F						CN-JC13F
A07	Gr/L	AEX	0.75	CN-641M						CN-JC13F
A06	P	AEX	0.75	CN-655F						CN-640M
A08	W/G	AEX	0.75	CN-656F						CN-641M
A10	G/L	AEX	0.75	CN-656F						CN-642F
A11	W/Y	AEX	0.75	CN-656F						CN-642F
A12	Gr/B	AEX	0.75	CN-656F						CN-642F
A19	Y/R	AEX	0.5	CN-655F	0.75TW4				0.75TW4	CN-651F
A20	Y/L	AEX	0.5	CN-655F	0.75TW4				0.75TW4	CN-651F
A21	B/W	AEX	0.5	CN-655F	0.75TW5				0.75TW5	CN-654F
A22	L/W	AEX	0.5	CN-655F	0.75TW5				0.75TW5	CN-654F
A56	Br	AEX	0.75	CN-655F	0.75TW1				0.75TW1	CN-JC14F
A57	R/W	AEX	0.75	CN-655F	0.75TW1				0.75TW1	CN-JC14F
A56	Br	AEX	0.75	CN-649F	0.75TW2				0.75TW2	CN-JC14F
A57	R/W	AEX	0.75	CN-649F	0.75TW2				0.75TW2	CN-JC14F
A56	Br	AEX	0.75	CN-649F	0.75TW3				0.75TW3	CN-JC14F
A57	R/W	AEX	0.75	CN-649F	0.75TW3				0.75TW3	CN-JC14F
E18	B/W	AEX	0.75	CN-649F						CN-JC12F
E18	B/W	AEX	0.75	CN-649F						CN-JC12F
E18	B/W	AEX	0.75	CN-JC12F						CN-JC12F
E18	B/W	AEX	0.75	CN-JC12F						CN-649F
E18	B/W	AEX	1.25	CN-JC12F						CN-656F

※1 IDENTIFICATION SYMBOL
※2 TWO WIRE CONNECT NUMBER

Reference only

(2/2)

GUARD HARNESS (c)

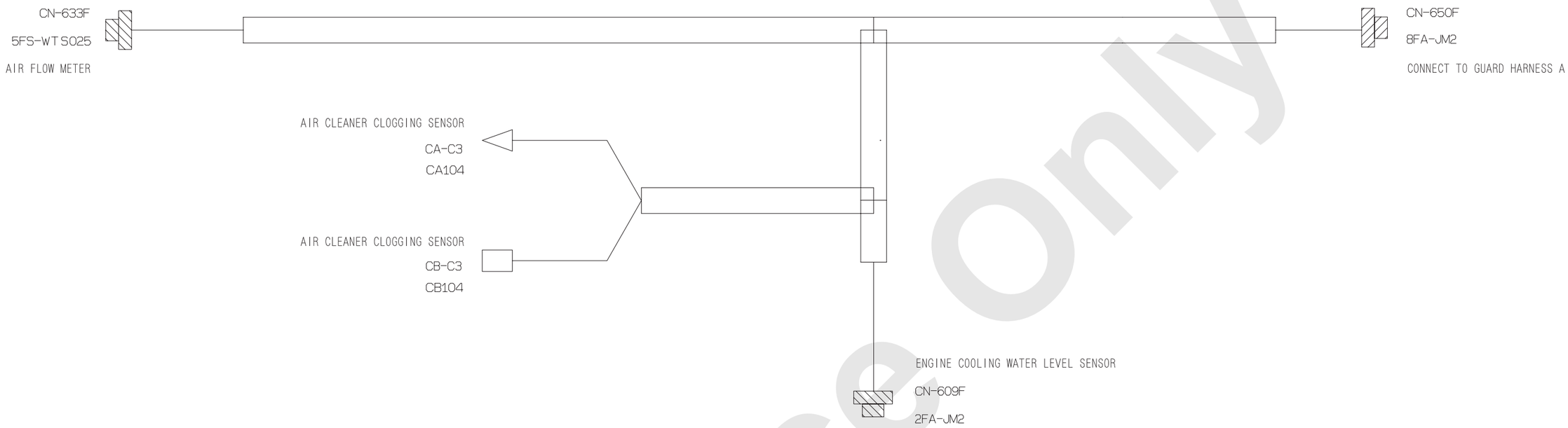

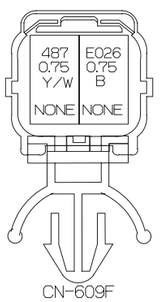

CN-609F
2FA-JM2

CA-C3
CA104

#0 E026 0.75 B + E026 0.75 B

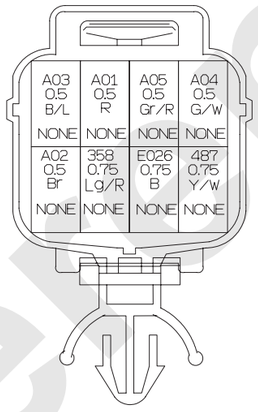

CN-650F
8FA-JM2

THE WIRE NO./COLOR LIST

WIRE NO.	WIRE COLOR	WIRE TYPE	SIZE	F R O M	※1	※2	CONNECTION	※2	※1	T O
358	Lg/R	AVSS	0.75	CN-650F						CB-C3
487	Y/W	AVSS	0.75	CN-609F						CN-650F
A01	R	AVSS	0.5	CN-650F						CN-633F
A02	Br	AVSS	0.5	CN-650F						CN-633F
A03	B/L	AVSS	0.5	CN-650F						CN-633F
A04	G/W	AVSS	0.5	CN-650F						CN-633F
A05	Gr/R	AVSS	0.5	CN-650F						CN-633F
E026	B	AVSS	0.75	CA-C3		DS-E1				CN-650F
E026	B	AVSS	0.75	CA-C3		DS-E1				CN-609F

※1 IDENTIFICATION SYMBOL
※2 TWO WIRE CONNECT NUMBER

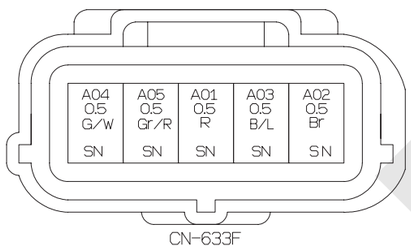

CN-633F
5FS-WTS025

CB-C3
CB104

Reference Only

NOx SENSOR HARNESS

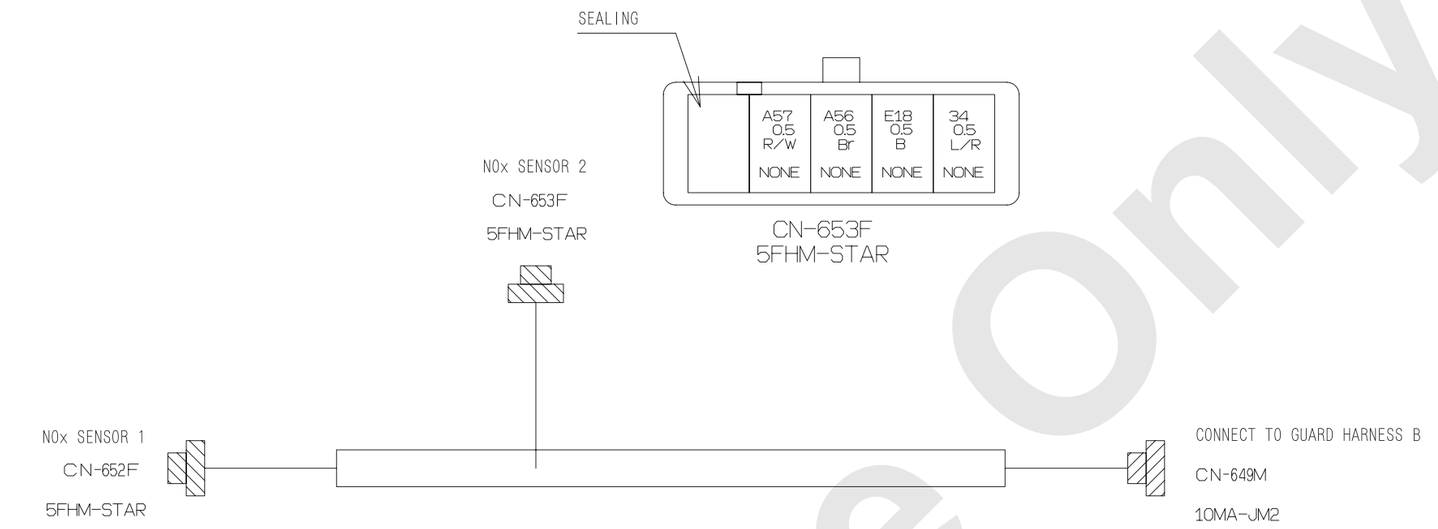

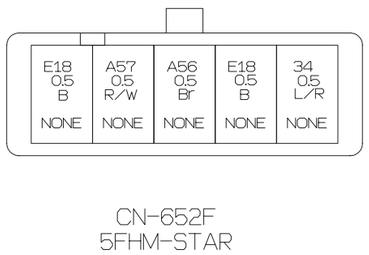

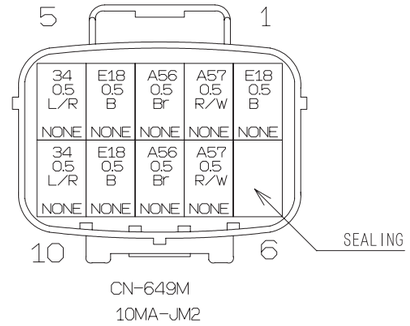

THE WIRE NO./COLOR LIST

WIRE NO.	WIRE COLOR	WIRE TYPE	SIZE	F R O M	PIN NUMBER	※1	CONNECTION	※1	PIN NUMBER	T O
34	L/R	AEX	0.5	CN-652F			————			CN-649M
34	L/R	AEX	0.5	CN-653F			————			CN-649M
A56	Br	AEX	0.5	CN-652F			————			CN-649M
A56	Br	AEX	0.5	CN-653F			————			CN-649M
A57	R/W	AEX	0.5	CN-652F			————			CN-649M
A57	R/W	AEX	0.5	CN-653F			————			CN-649M
E18	B	AEX	0.5	CN-652F			————			CN-649M
E18	B	AEX	0.5	CN-652F			————			CN-649M
E18	B	AEX	0.5	CN-653F			————			CN-649M

※1 IDENTIFICATION SYMBOL

Reference Only

7. CAB

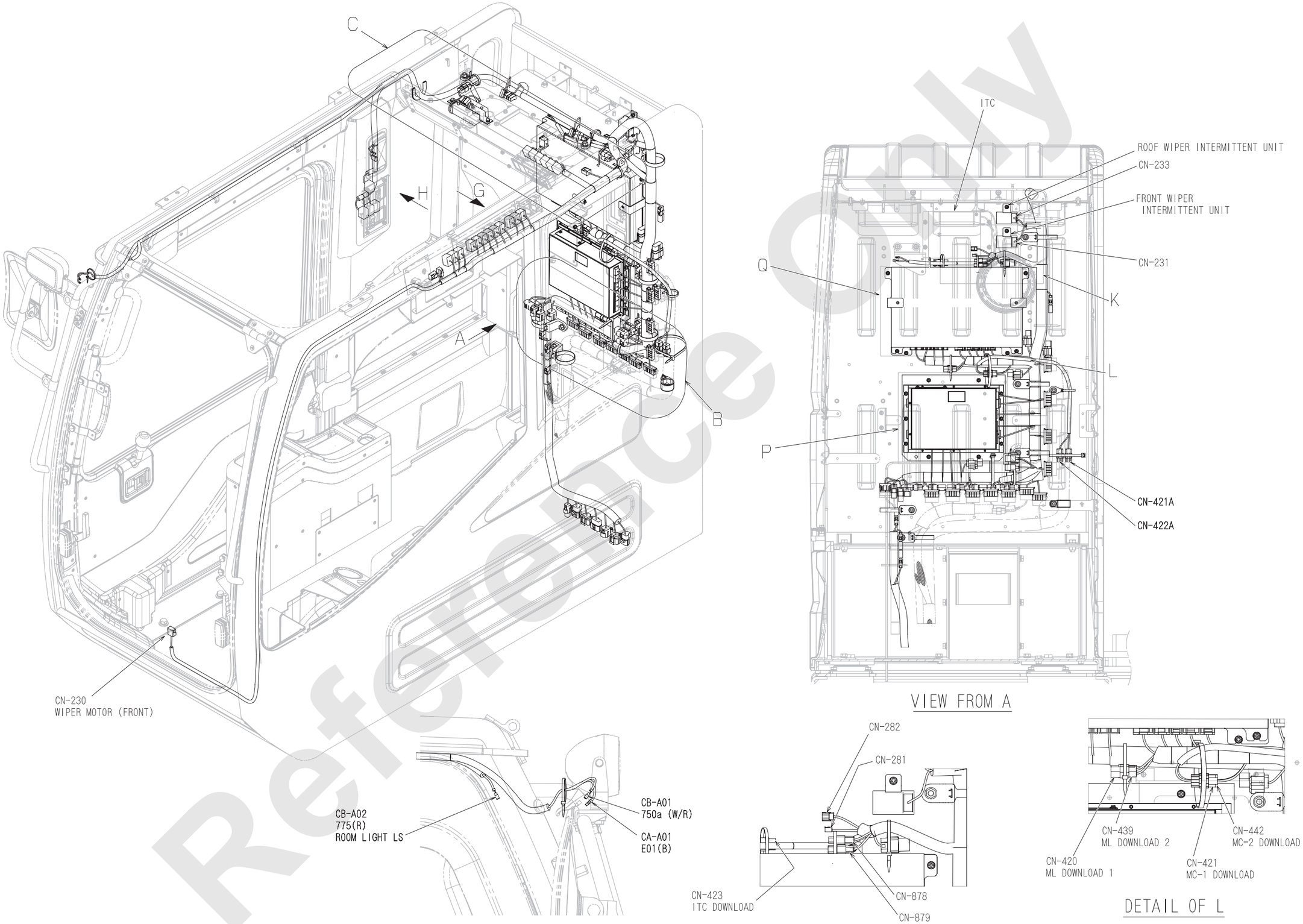

Reference Only

(1/3)

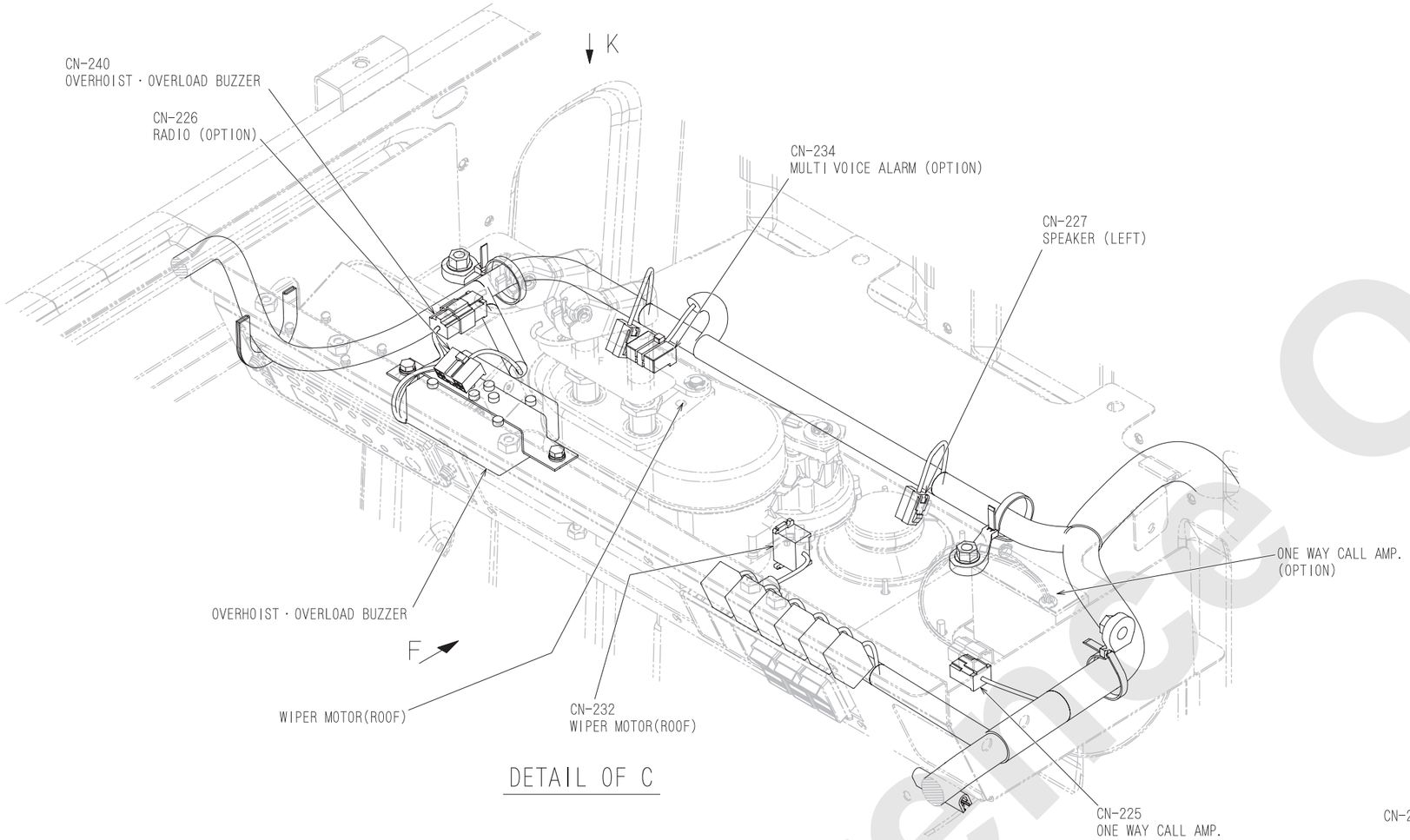

DETAIL OF C

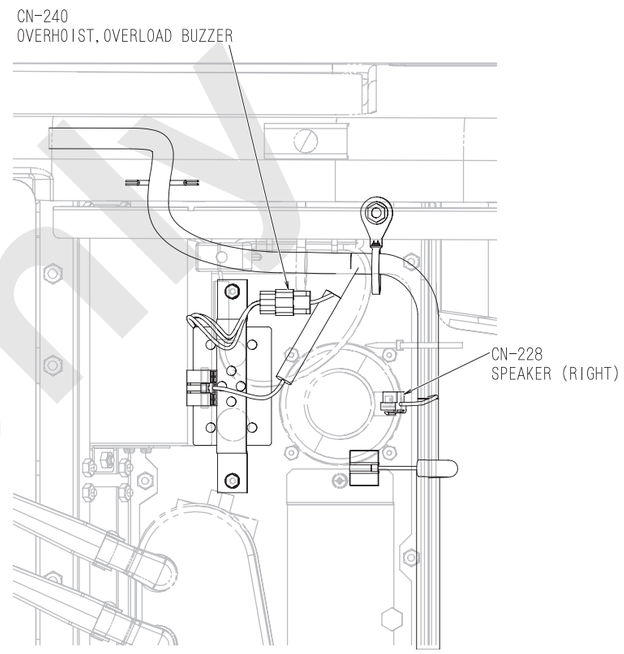

VIEW FROM K

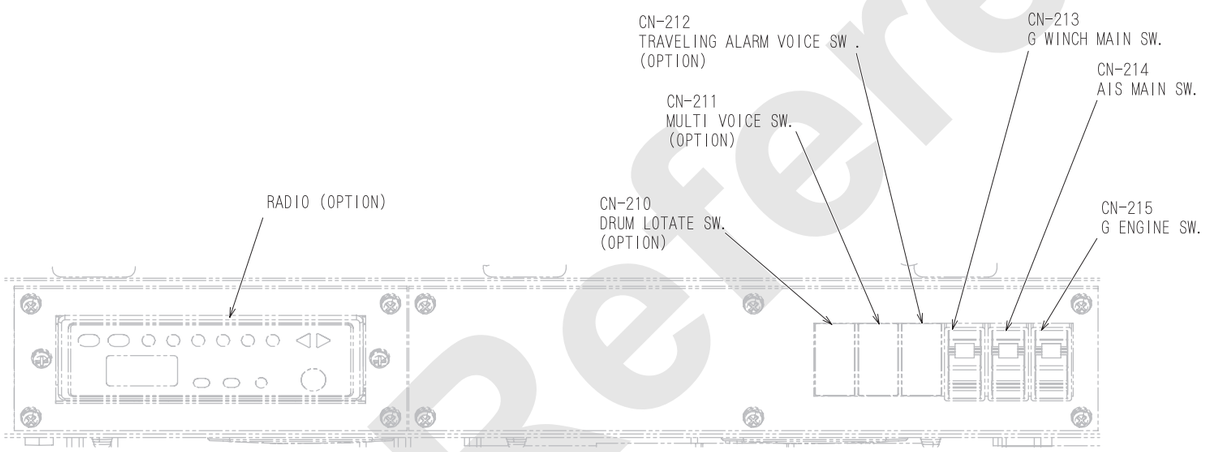

VIEW FROM F

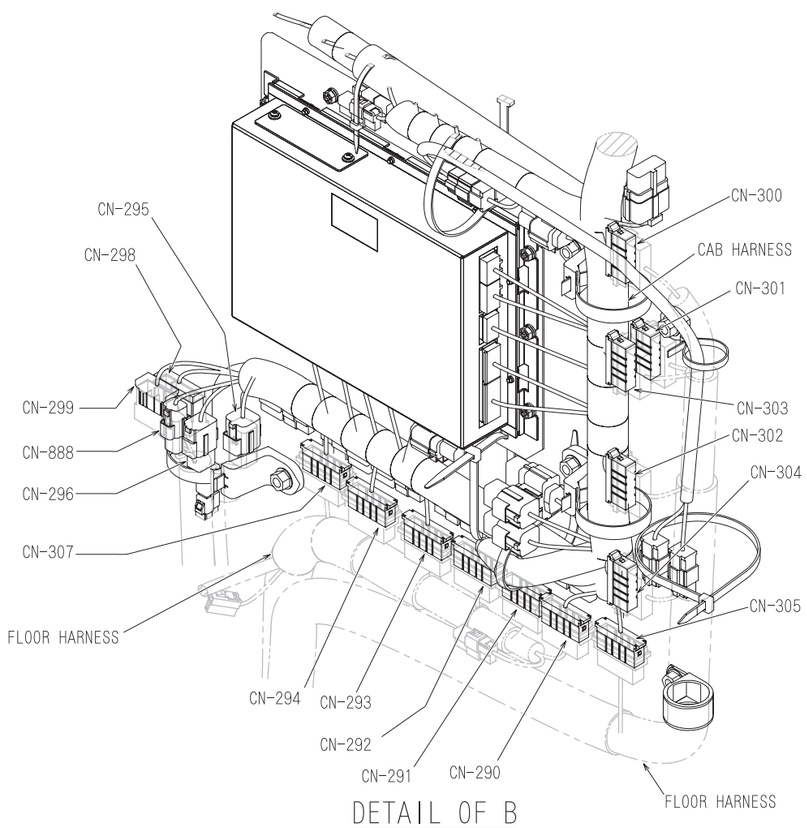

DETAIL OF B

(2/3)

Reference only

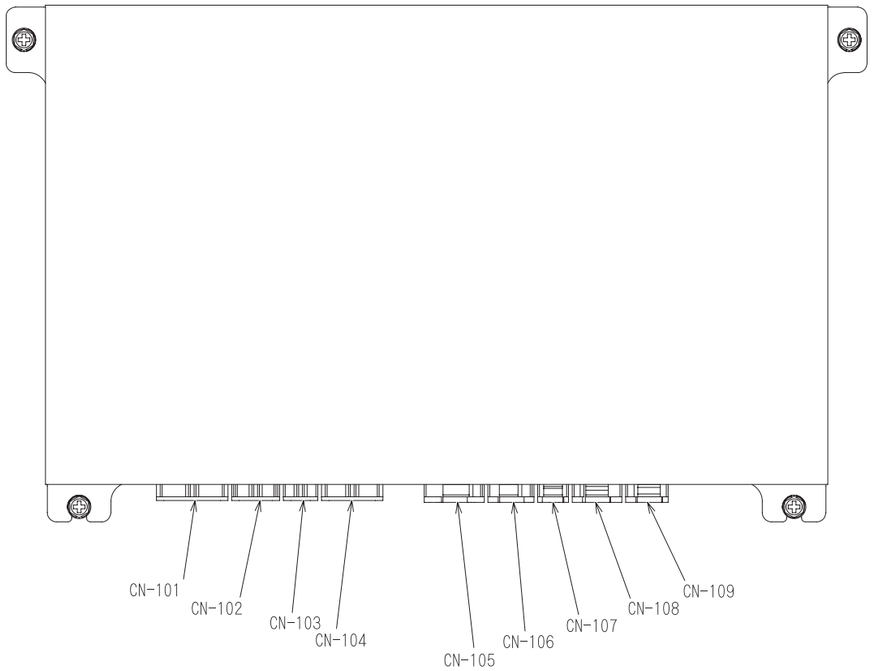

DETAIL OF Q

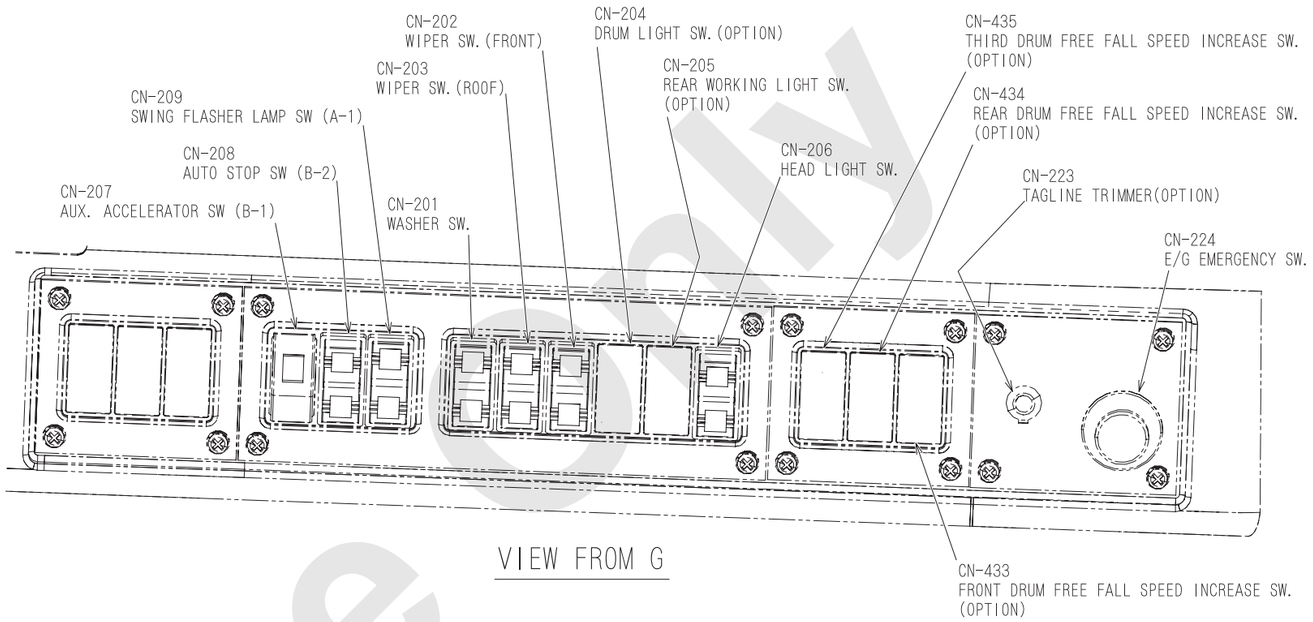

VIEW FROM G

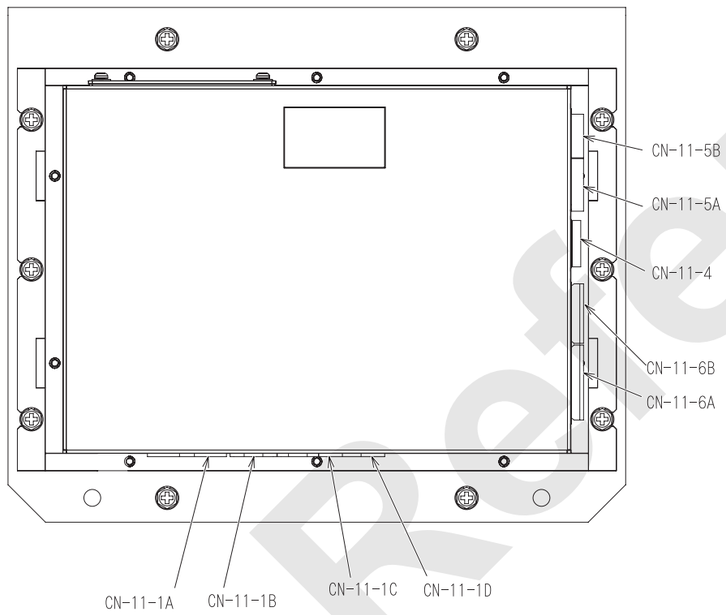

DETAIL OF P

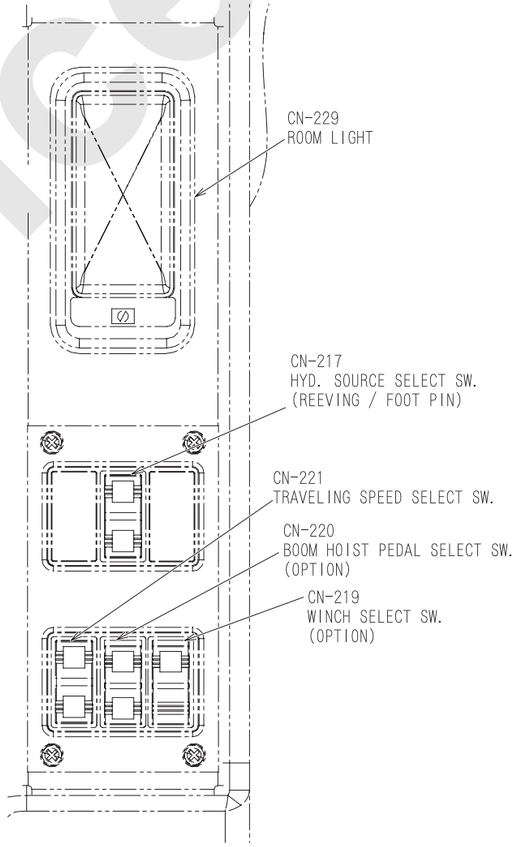

VIEW FROM H

Reference only

(3/3)

CAB MAIN HARNESS

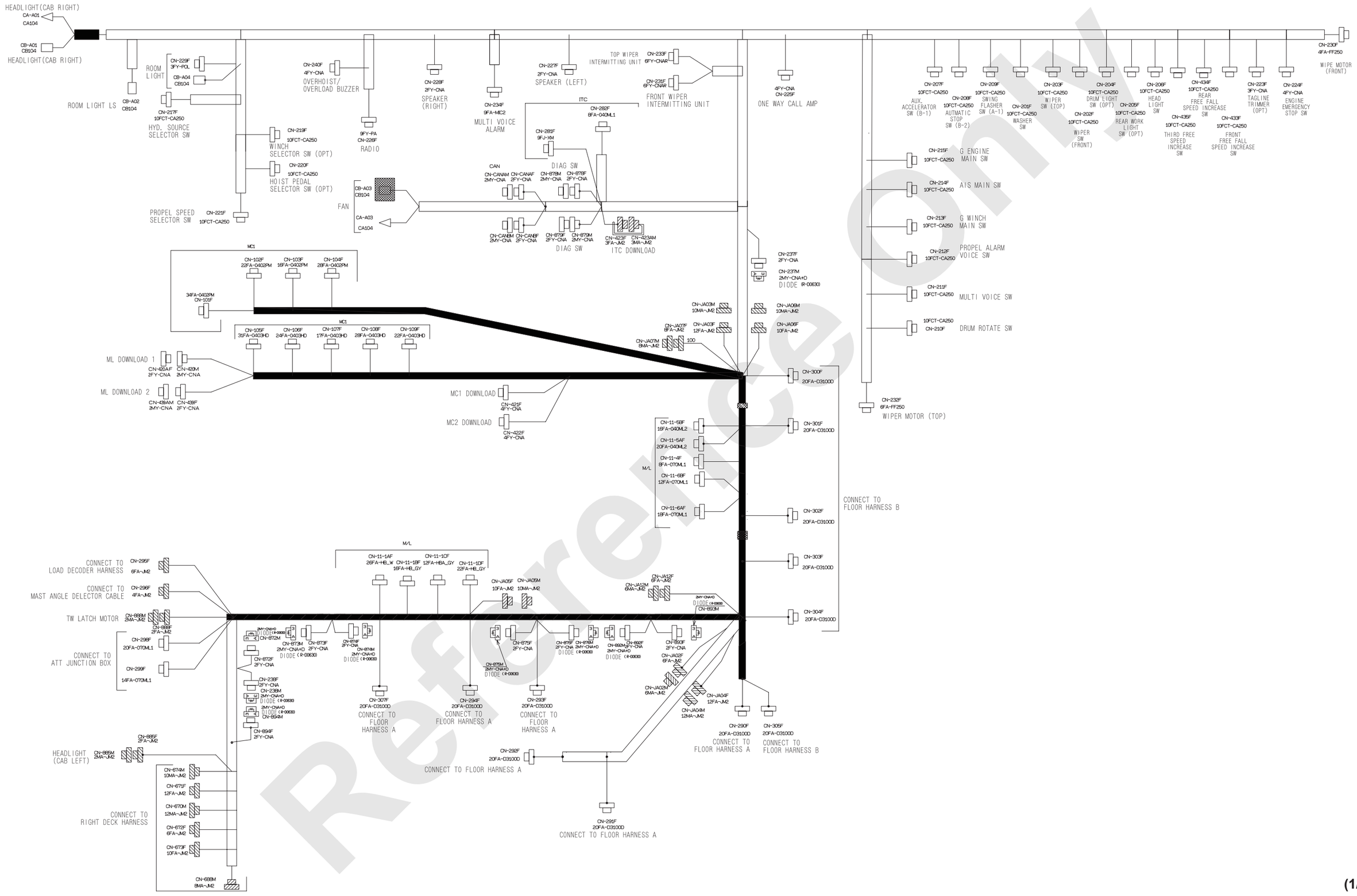

Reference Only

(1/5)

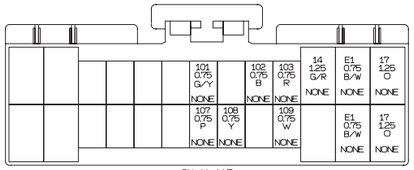

CN-11-1AF
26FA-HB_W

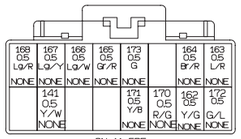

CN-11-5BF
16FA-040ML2

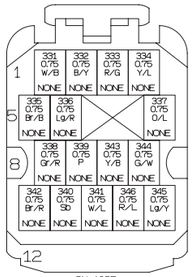

CN-103F
16FA-0402PM

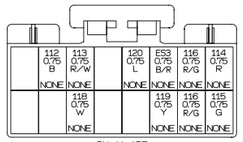

CN-11-1BF
16FA-HB_GY

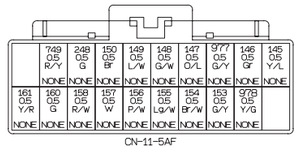

CN-11-5AF
20FA-040ML2

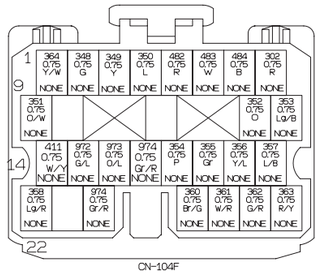

CN-104F
28FA-0402PM

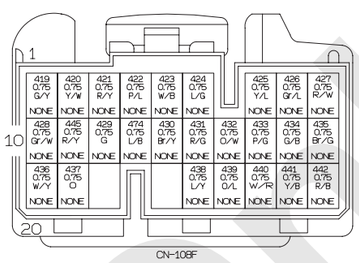

CN-108F
28FA-0403HD

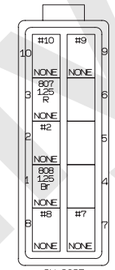

CN-203F
10FCT-CA250
#2 24 1.25 Y+24 1.25 Y
#7 E0 0.75 B+E0 0.75 B
#8 749 0.75 R/Y+749 0.75 R/Y
#9 E0 0.75 B+E0 0.75 B
#10 749 0.75 R/Y+749 0.75 R/Y

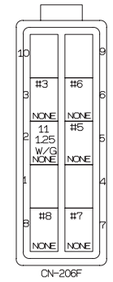

CN-206F
10FCT-CA250
#3 749 1.25 R/Y+749 1.25 R/Y
#5 11 1.25 W/G+11 1.25 W/G
#6 750 1.25 W/R+750 1.25 W/R
#7 E0 0.75 B+E0 0.75 B
#8 749 1.25 R/Y+749 1.25 R/Y

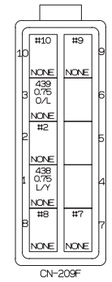

CN-209F
10FCT-CA250
#2 39 0.75 Y/B+39 0.75 Y/B
#7 E0 0.75 B+E0 0.75 B
#8 749 0.75 R/Y+749 0.75 R/Y
#9 E0 0.75 B+E0 0.75 B
#10 749 0.75 R/Y+749 0.75 R/Y

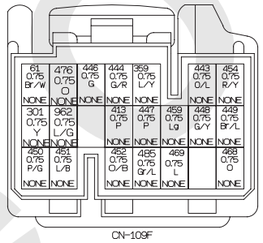

CN-109F
22FA-0403HD

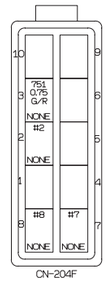

CN-204F
10FCT-CA250
#2 49 1.25 R/W+49 0.75 R/W
#7 E0 0.75 B+E0 0.75 B
#8 749 0.75 R/Y+749 0.75 R/Y

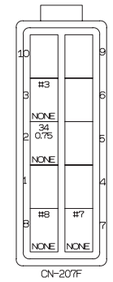

CN-207F
10FCT-CA250
#3 753 0.75 GY/R+753 0.75 GY/R
#7 E0 0.75 B+E0 0.75 B
#8 749 0.75 R/Y+749 0.75 R/Y

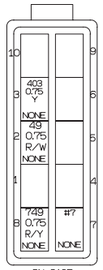

CN-210F
10FCT-CA250
#7 E0 0.75 B+E0 0.75 B

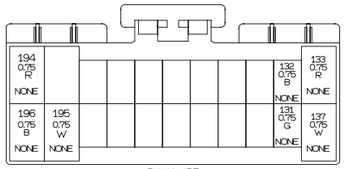

CN-11-1DF
22FA-HB_GY

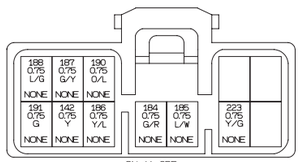

CN-11-6BF
12FA-070ML1

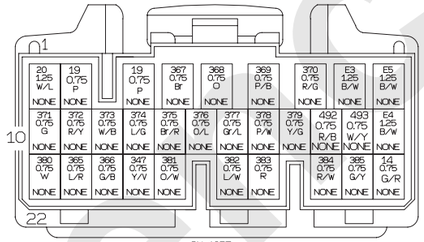

CN-105F
31FA-0403HD

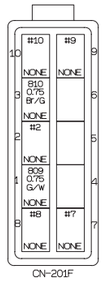

CN-201F
10FCT-CA250
#2 24 1.25 Y+24 1.25 Y
#7 E0 0.75 B+E0 0.75 B
#8 749 0.75 R/Y+749 0.75 R/Y
#9 E0 0.75 B+E0 0.75 B
#10 749 0.75 R/Y+749 0.75 R/Y

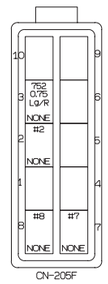

CN-205F
10FCT-CA250
#2 49 0.75 R/W+49 0.75 R/W
#7 E0 0.75 B+E0 0.75 B
#8 749 0.75 R/Y+749 0.75 R/Y

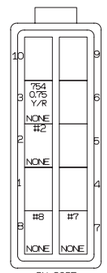

CN-208F
10FCT-CA250
#2 21 0.75 LG+21 0.75 LG
#7 E0 0.75 B+E0 0.75 B
#8 749 0.75 R/Y+749 0.75 R/Y

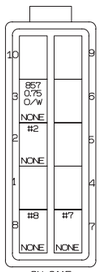

CN-211F
10FCT-CA250
#2 39 0.75 Y/B+39 0.75 Y/B
#7 E0 0.75 B+E0 0.75 B
#8 749 0.75 R/Y+749 0.75 R/Y

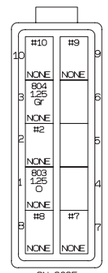

CN-202F
10FCT-CA250
#2 24 1.25 Y+24 1.25 Y
#7 E0 0.75 B+E0 0.75 B
#8 749 0.75 R/Y+749 0.75 R/Y
#9 E0 0.75 B+E0 0.75 B
#10 749 0.75 R/Y+749 0.75 R/Y

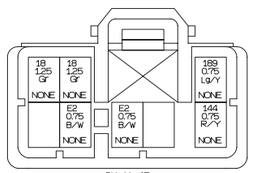

CN-11-4F
8FA-070ML1

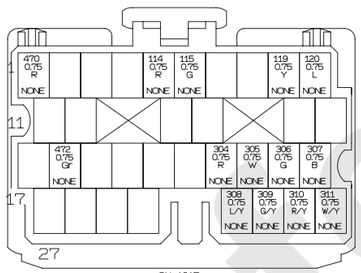

CN-101F
34FA-0402PM

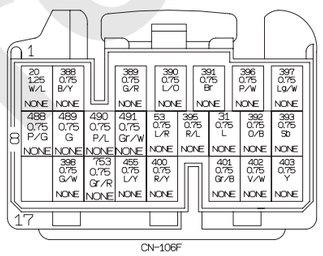

CN-106F
24FA-0403HD

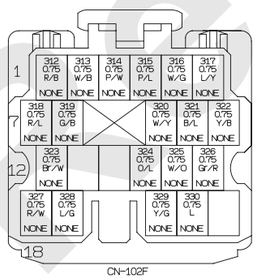

CN-102F
22FA-0402PM

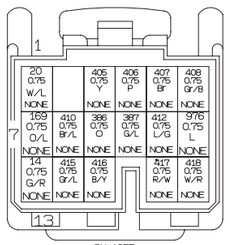

CN-107F
17FA-0403HD

Reference Only

(2/5)

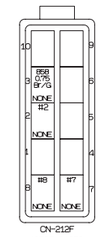
CN-212F
10FCT-CA250
#2 39 0.75 Y/B+39 0.75 Y/B
#7 E0 0.75 B + E0 0.75 B
#8 749 0.75 R/Y + 749 0.75 R/Y

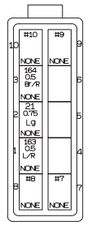
CN-219F
10FCT-CA250
#7 E0 0.75 B + E0 0.75 B
#8 749 0.75 R/Y + 749 0.75 R/Y
#9 E0 0.75 B + E0 0.75 B
#10 749 0.75 R/Y + 749 0.75 R/Y

CN-227F
2FY-CNA

CN-228F
2FY-CNA

CN-237F
2FY-CNA
#1 456 0.75 G/B + 456 0.75 G/B
#2 455 0.75 L/Y + 455 0.75 L/Y

CN-237M
2MY-CNA+D

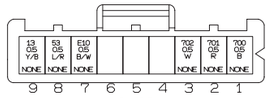
CN-281F
9FJ-XM

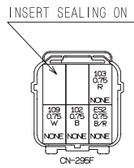

CN-295F
6FA-JM2

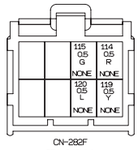
CN-282F
8FA-040ML1

CN-296F
4FA-JM2

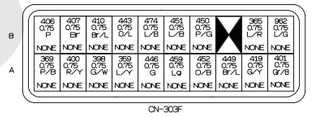
CN-303F
20FA-03100D

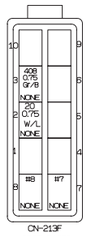
CN-213F
10FCT-CA250
#7 E0 0.75 B + E0 0.75 B
#8 749 0.75 R/Y + 749 0.75 R/Y

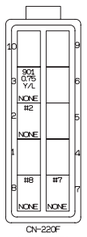
CN-220F
10FCT-CA250
#2 82 0.75 G/L+82 0.75 G/L
#7 E0 0.75 B+E0 0.75 B
#8 749 0.75 R/Y + 749 0.75 R/Y

CN-229F
3FY-POL

CN-238F
2FY-CNA

CN-238M
2MY-CNA+D

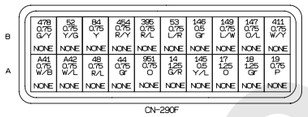
CN-290F
20FA-03100D

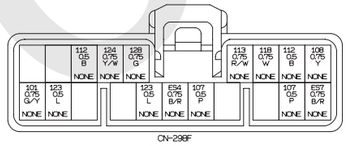
CN-298F
20FA-070ML1

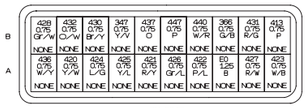
CN-304F
20FA-03100D

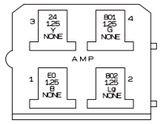

CN-230F
4FA-FF250

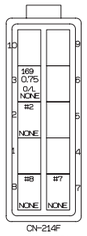
CN-214F
10FCT-CA250
#2 20 0.75 W/L+20 0.75 W/L
#7 E0 0.75 B+E0 0.75 B
#8 749 0.75 R/Y + 749 0.75 R/Y

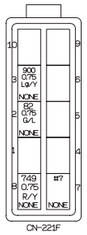
CN-221F
10FCT-CA250
#7 E0 0.75 B+E0 0.75 B

CN-231F
6FY-CNAR
#2 24 125 Y+24 125 Y
#4 E0 0.75 B+E0 0.75 B

CN-240F
4FY-CNA
#3 E0 0.75 B + E0 0.75 B
#4 E0 0.75 B + E0 0.75 B

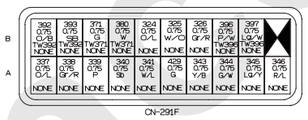
CN-291F
20FA-03100D

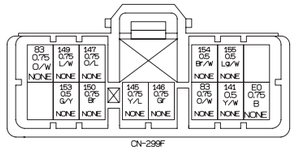
CN-299F
14FA-070ML1

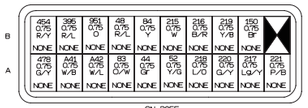
CN-305F
20FA-03100D

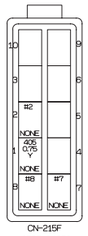
CN-215F
10FCT-CA250
#2 20 0.75 W/L+20 0.75 W/L
#7 E0 0.75 BHE0 0.75 B
#8 749 0.75 R/Y + 749 0.75 R/Y

CN-223F
3FY-CNA

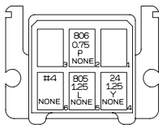
CN-232F
6FA-FF250
#4 E0 0.125 BHE0 125 B

CN-CANAF
2FY-CNA

CN-CANAM
2MY-CNA

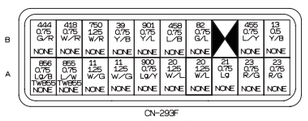
CN-292F
20FA-03100D

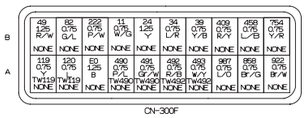
CN-300F
20FA-03100D

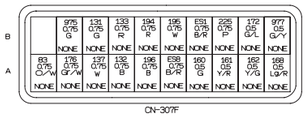
CN-307F
20FA-03100D

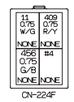
CN-224F
4FY-CNA
#4 458 0.75 L/B+458 0.75 L/B

CN-239F
6FY-CNAR
#2 24 125 Y+24 125 Y
#4 E0 0.75 BHE0 0.75 B

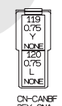
CN-CANBF
2FY-CNA

CN-293F
20FA-03100D

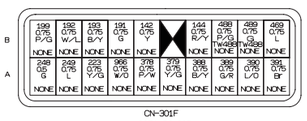
CN-301F
20FA-03100D

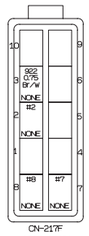
CN-217F
10FCT-CA250
#2 82 0.75 G/L+82 0.75 G/L
#7 E0 0.75 BHE0 0.75 B
#8 749 0.75 R/Y + 749 0.75 R/Y

CN-225F
4FY-CNA
#4 E0 0.75 BHE0 0.75 B

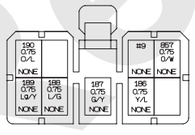
CN-234F
9FA-MIC2
#9 E0 0.75 B + E0 0.75 B

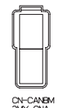
CN-CANBM
2MY-CNA

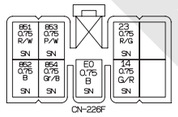
CN-226F
9FY-PA

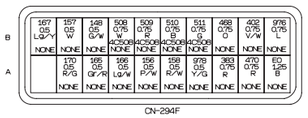
CN-294F
20FA-03100D

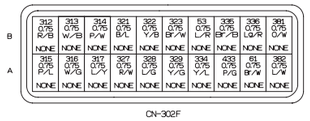
CN-302F
20FA-03100D

Reference Only

(3/5)

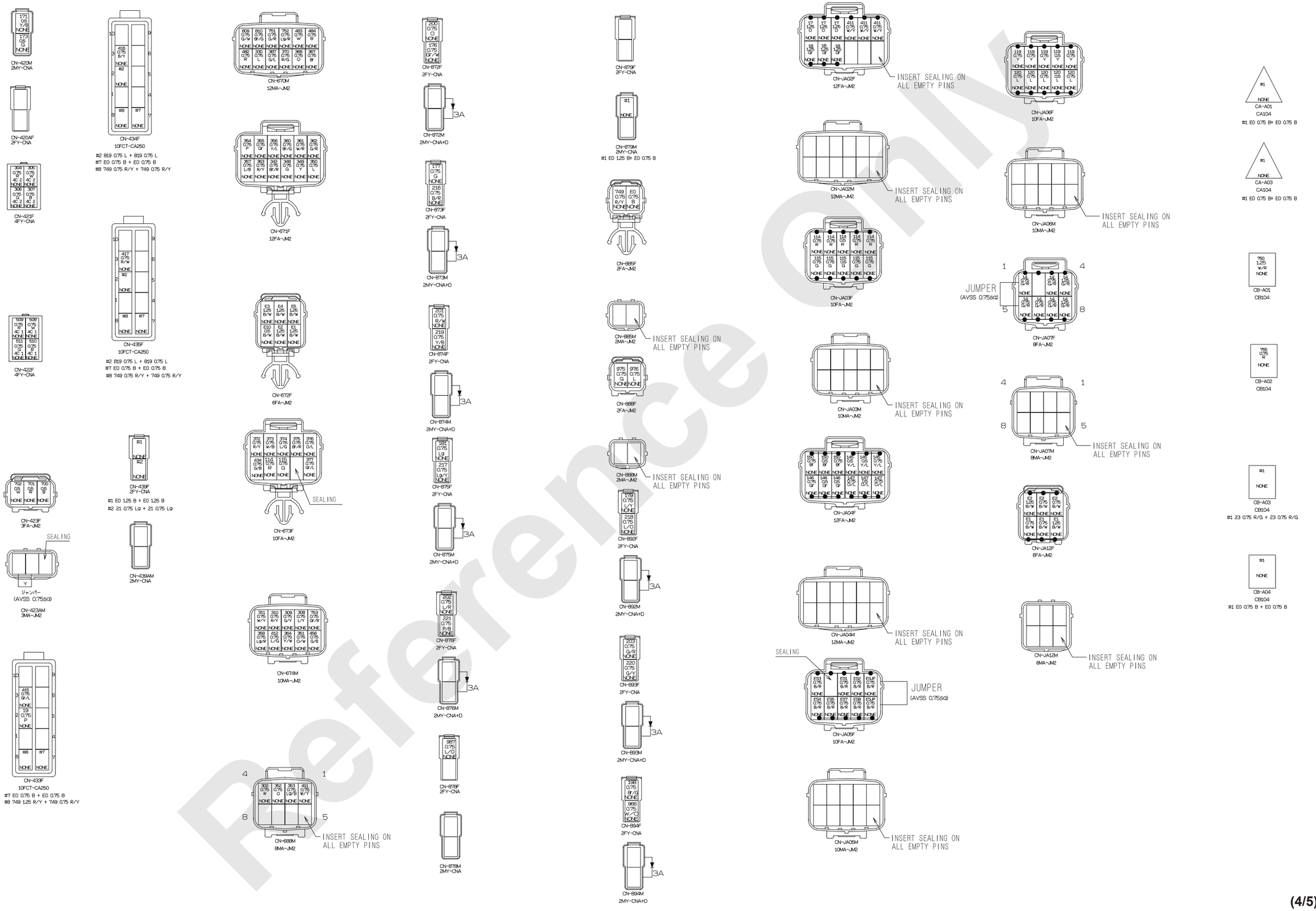

(4/5)

Reference Only

THE WIRE NO. /COLOR LIST

WIRE NO.	WIRE COLOR	WIRE TYPE	SIZE	FROM	2WIRE CONNECT NO.	CONNECTION	2WIRE CONNECT NO.	TO
11	W/G	AVSS	1.25	CN-293F				CN-206F
11	W/G	AVSS	1.25	CN-293F			DSA35	CN-206F
11	W/G	AVSS	1.25	JS-A1			DSA35	CN-206F
11	W/G	AVSS	0.75	JS-A1				CN-224F
11	W/G	AVSS	0.75	JS-A1				CN-229F
11	W/G	AVSS	0.75	JS-A1				CN-300F
13	Y/B	AVSS	0.5	CN-293F				CN-281F
14	G/R	AVSS	0.75	CN-226F				CN-JA07F
14	G/R	AVSS	1.25	CN-11-1AF				CN-JA07F
14	G/R	AVSS	0.75	CN-JA07F				CN-JA07F
14	G/R	AVSS	1.25	CN-JA07F				CN-290F
14	G/R	AVSS	0.75	CN-JA07F				CN-105F
14	G/R	AVSS	0.75	CN-JA07F				CN-107F
17	O	AVSS	1.25	CN-JA02F				CN-290F
17	O	AVSS	1.25	CN-JA02F				CN-11-1AF
17	O	AVSS	1.25	CN-JA02F				CN-11-1AF
18	Gr	AVSS	1.25	CN-JA02F				CN-290F
18	Gr	AVSS	1.25	CN-JA02F				CN-11-4F
18	Gr	AVSS	1.25	CN-JA02F				CN-11-4F
19	P	AVSS	0.75	CN-290F				JS-A11
19	P	AVSS	0.75	CN-105F				JS-A11
19	P	AVSS	0.75	JS-A12				JS-A11
19	P	AVSS	0.75	JS-A12				CN-105F
19	P	AVSS	0.75	JS-A12			DSA120	CN-435F
19	P	AVSS	0.75	CN-434F	DSA121		DSA120	CN-435F
19	P	AVSS	0.75	CN-434F	DSA121			CN-433F
20	W/L	AVSS	1.25	CN-293F				JS-A13
20	W/L	AVSS	1.25	CN-105F				JS-A13
20	W/L	AVSS	0.75	CN-107F				JS-A13
20	W/L	AVSS	1.25	CN-293F				JS-A14
20	W/L	AVSS	1.25	CN-106F				JS-A14
20	W/L	AVSS	0.75	CN-215F	DSA49			JS-A14
20	W/L	AVSS	0.75	CN-215F	DSA49		DSA207	CN-214F
20	W/L	AVSS	0.75	CN-213F			DSA207	CN-214F
21	Lg	AVSS	0.75	CN-293F			DSA209	CN-439F
21	Lg	AVSS	0.75	CN-208F	DSA200		DSA209	CN-439F
21	Lg	AVSS	0.75	CN-208F	DSA200			CN-219F
23	R/G	AVSS	0.75	CB-A03	DSA13			CN-293F
23	R/G	AVSS	0.75	CB-A03	DSA13			CN-225F
23	R/G	AVSS	0.75	CN-226F				CN-293F
24	Y	AVSS	1.25	CN-231F	DSA1			CN-300F
24	Y	AVSS	1.25	CN-231F	DSA1		DSA5	CN-233F
24	Y	AVSS	1.25	JS-A7			DSA5	CN-233F
24	Y	AVSS	1.25	JS-A7				CN-232F
24	Y	AVSS	1.25	JS-A7			DSA206	CN-201F
24	Y	AVSS	1.25	CN-202F	DSA22		DSA206	CN-201F
24	Y	AVSS	1.25	CN-202F	DSA22		DSA17	CN-203F
24	Y	AVSS	1.25	CN-230F			DSA17	CN-203F
31	L	AVSS	0.75	CN-106F				CN-292F
34	L/R	AVSS	0.75	CN-207F				CN-300F
39	Y/B	AVSS	0.75	CN-209F	DSA201			CN-300F
39	Y/B	AVSS	0.75	CN-209F	DSA201		DSA203	CN-211F
39	Y/B	AVSS	0.75	CN-212F	DSA202		DSA203	CN-211F
39	Y/B	AVSS	0.75	CN-212F	DSA202			CN-293F
44	Gr	AVSS	0.75	CN-290F				CN-305F
48	R/L	AVSS	0.75	CN-305F				CN-290F
49	R/W	AVSS	1.25	CN-204F	DSA31			CN-300F
49	R/W	AVSS	0.75	CN-204F	DSA31		DSA33	CN-205F
49	R/W	AVSS	0.75	CN-210F			DSA33	CN-205F
52	Y/G	AVSS	0.75	CN-305F				CN-290F
53	L/R	AVSS	0.75	CN-106F				JS-A17
53	L/R	AVSS	0.5	CN-281F				JS-A17
53	L/R	AVSS	0.75	JS-A18				JS-A17
53	L/R	AVSS	0.75	JS-A18				CN-290F
53	L/R	AVSS	0.75	JS-A18				CN-302F
61	Br/W	AVSS	0.75	CN-109F				CN-302F
82	G/L	AVSS	0.75	JS-A4				CN-300F
82	G/L	AVSS	0.75	CN-217F	DSA59			JS-A4
82	G/L	AVSS	0.75	CN-217F	DSA59		DSA68	CN-220F
82	G/L	AVSS	0.75	CN-221F			DSA68	CN-220F
82	G/L	AVSS	0.75	CN-293F				JS-A4
83	O/W	AVSS	0.75	JS-A2				CN-305F
83	O/W	AVSS	0.75	JS-A2				CN-299F
83	O/W	AVSS	0.75	JS-A2				CN-299F
83	O/W	AVSS	0.75	JS-A2				CN-307F
84	Y	AVSS	0.75	CN-305F				CN-290F
101	G/Y	AVSS	0.75	CN-11-1AF				CN-298F
102	B	AVSS	0.75	CN-11-1AF				CN-295F
103	R	AVSS	0.75	CN-11-1AF				CN-295F
107	P	AVSS	0.75	JS-A18				CN-11-1AF
107	P	AVSS	0.5	JS-A18				CN-298F
107	P	AVSS	0.5	JS-A18				CN-298F
108	Y	AVSS	0.75	CN-11-1AF				CN-298F
109	W	AVSS	0.75	CN-11-1AF				CN-295F
112	B	AVSS	0.75	JS-A19				CN-11-1BF
112	B	AVSS	0.5	JS-A19				CN-298F
112	B	AVSS	0.5	JS-A19				CN-298F
113	R/W	AVSS	0.75	CN-298F				CN-11-1BF
116	R/G	AVSS	0.75	CN-11-1BF				CN-11-1BF
118	W	AVSS	0.75	CN-11-1BF				CN-298F
123	L	AVSS	0.75	JS-A20				CN-11-1CF
123	L	AVSS	0.5	JS-A20				CN-298F
123	L	AVSS	0.5	JS-A20				CN-298F
124	Y/W	AVSS	0.75	CN-11-1CF				CN-298F
125	B	AVSS	0.75	CN-11-1CF				CN-296F
126	R	AVSS	0.75	CN-11-1CF				CN-296F
128	G	AVSS	0.75	CN-11-1CF				CN-298F
129	W	AVSS	0.75	CN-11-1CF				CN-296F
131	G	AVSS	0.75	CN-11-1DF				CN-307F
132	B	AVSS	0.75	CN-11-1DF				CN-307F
133	R	AVSS	0.75	CN-11-1DF				CN-307F
137	W	AVSS	0.75	CN-11-1DF				CN-307F
141	Y/W	AVSS	0.5	CN-299F				CN-11-5BF
142	Y	AVSS	0.75	CN-301F				CN-11-6BF
144	R/Y	AVSS	0.75	CN-11-4F				CN-301F

WIRE NO.	WIRE COLOR	WIRE TYPE	SIZE	FROM	2WIRE CONNECT NO.	CONNECTION	2WIRE CONNECT NO.	TO
145	Y/L	AVSS	0.5	CN-11-5AF				CN-JA04F
145	Y/L	AVSS	0.75	CN-299F				CN-JA04F
145	Y/L	AVSS	0.5	CN-290F				CN-JA04F
146	Gr	AVSS	0.5	CN-11-5AF				CN-JA04F
146	Gr	AVSS	0.75	CN-299F				CN-JA04F
146	Gr	AVSS	0.5	CN-290F				CN-JA04F
147	O/L	AVSS	0.5	CN-11-5AF				CN-JA04F
147	O/L	AVSS	0.75	CN-290F				CN-JA04F
147	O/L	AVSS	0.75	CN-299F				CN-JA04F
148	G/W	AVSS	0.5	CN-294F				CN-11-5AF
149	L/W	AVSS	0.5	JS-A15				CN-11-5AF
149	L/W	AVSS	0.75	JS-A15				CN-290F
149	L/W	AVSS	0.75	JS-A15				CN-299F
150	Br	AVSS	0.5	CN-JA04F				CN-11-5AF
150	Br	AVSS	0.75	CN-JA04F				CN-299F
150	Br	AVSS	0.75	CN-JA04F				CN-305F
153	G/Y	AVSS	0.5	CN-11-5AF				CN-299F
154	Br/W	AVSS	0.5	CN-11-5AF				CN-299F
155	Lg/W	AVSS	0.5	CN-299F				CN-11-5AF
156	P/W	AVSS	0.5	CN-11-5AF				CN-294F
157	W	AVSS	0.5	CN-294F				CN-11-5AF
158	R/W	AVSS	0.5	CN-11-5AF				CN-294F
160	G	AVSS	0.5	CN-11-5AF				CN-307F
161	Y/R	AVSS	0.5	CN-307F				CN-11-5AF
162	Y/G	AVSS	0.5	CN-307F				CN-11-5BF
163	L/R	AVSS	0.5	CN-11-5BF				CN-219F
164	Br/R	AVSS	0.5	CN-219F				CN-11-5BF
165	Gr/R	AVSS	0.5	CN-294F				CN-11-5BF
166	Lg/W	AVSS	0.5	CN-294F				CN-11-5BF
167	Lg/Y	AVSS	0.5	CN-294F				CN-11-5BF
168	Lg/R	AVSS	0.5	CN-307F				CN-11-5BF
169	O/L	AVSS	0.75	CN-214F				CN-107F
170	R/G	AVSS	0.5	CN-11-5BF				CN-294F
171	Y/B	AVSS	0.5	CN-420M				CN-11-5BF
172	G/L	AVSS	0.5	CN-11-5BF				CN-307F
173	G	AVSS	0.5	CN-420M				CN-11-5BF
175	Y	AVSS	0.75	CN-238F				CN-11-6AF
176	Gr/W	AVSS	0.75	CN-872F				CN-307F
177	G	AVSS	0.75	CN-873F				CN-11-6AF
179	L/Y	AVSS	0.75	CN-892F				CN-11-6AF
181	Lg	AVSS	0.75	CN-875F				CN-11-6AF
184	G/R	AVSS	0.75	CN-240F				CN-11-6BF
185	L/W	AVSS	0.75	CN-240F				CN-11-6BF
186	Y/L	AVSS	0.75	CN-234F				CN-11-6BF
187	G/Y	AVSS	0.75	CN-11-6BF				CN-234F
188	L/G	AVSS	0.75	CN-11-6BF				CN-234F
189	Lg/Y	AVSS	0.75	CN-11-4F				CN-234F
190	O/L	AVSS	0.75	CN-11-6BF				CN-234F
191	G	AVSS	0.75	CN-11-6BF				CN-301F
192	W/L	AVSS	0.75	CN-301F				CN-11-6AF
193	B/Y	AVSS	0.75	CN-11-6AF				CN-301F
194	R	AVSS	0.75	CN-11-1DF				CN-307F
195	W	AVSS	0.75	CN-11-1DF				CN-307F
196	B	AVSS	0.75	CN-11-1DF				CN-307F
198	Br/G	AVSS	0.75	CN-894F				CN-11-6AF
199	P/G	AVSS	0.75	CN-301F				CN-11-6AF
200	O	AVSS	0.75	CN-11-6AF				CN-872F
201	R/W	AVSS	0.75	CN-11-6AF				CN-874F
202	L/R	AVSS	0.75	CN-11-6AF				CN-876F
203	G/R	AVSS	0.75	CN-11-6AF				CN-893F
215	W	AVSS	0.75	CN-305F				CN-238F
216	B/R	AVSS	0.75	CN-305F				CN-873F
217	Lg/Y	AVSS	0.75	CN-305F				CN-875F
218	L/O	AVSS	0.75	CN-305F				CN-892F
219	Y/B	AVSS	0.75	CN-305F				CN-874F
220	G/Y	AVSS	0.75	CN-305F				CN-893F
221	P/B	AVSS	0.75	CN-305F				CN-876F
222	P/W	AVSS	0.75	CN-11-6AF				CN-300F
223	Y/G	AVSS	0.75	CN-11-6BF				CN-301F
225	P	AVSS	0.75	CN-11-6AF				CN-307F
248	G	AVSS	0.5	CN-11-5AF				CN-301F
249	L	AVSS	0.75	CN-11-6AF				CN-301F
301	Y	AVSS	0.75	CN-109F				CN-292F
302	R	AVSS	0.75	CN-104F				CN-688M
308	L/Y	AVSS	0.75	CN-101F				CN-674M
309	G/Y	AVSS	0.75	CN-674M				CN-101F
310	R/Y	AVSS	0.75	CN-674M				CN-101F
311	W/Y	AVSS	0.75	CN-101F				CN-674M
312	R/B	AVSS	0.75	CN-302F				CN-102F
313	W/B	AVSS	0.75	CN-302F				CN-102F
314	P/W	AVSS	0.75	CN-302F				CN-102F
315	P/L	AVSS	0.75	CN-302F				CN-102F
316	W/G	AVSS	0.75	CN-302F				CN-102F
317	L/Y	AVSS	0.75	CN-302F				CN-102F
318	R/L	AVSS	0.75	CN-102F				CN-292F
319	G/B	AVSS	0.75	CN-102F				CN-292F
320	W/Y	AVSS	0.75	CN-102F				CN-292F
321	B/L	AVSS	0.75	CN-302F				CN-102F
322	Y/B	AVSS	0.75	CN-302F				CN-102F
323	Br/W	AVSS	0.75	CN-302F				CN-102F
324	O/L	AVSS	0.75	CN-291F				CN-102F
325	W/O	AVSS	0.75	CN-291F				CN-102F
326	Gr/R	AVSS	0.75	CN-291F				CN-102F
327	R/W	AVSS	0.75	CN-302F				CN-102F
328	L/G	AVSS	0.75	CN-302F				CN-102F
329	Y/G	AVSS	0.75	CN-302F				CN-102F
330	L	AVSS	0.75	CN-102F				CN-670M
331	W/B	AVSS	0.75	CN-223F				CN-103F
332	B/Y	AVSS	0.75	CN-223F				CN-103F
333	R/G	AVSS	0.75	CN-223F				CN-103F
334	Y/L	AVSS	0.75	CN-302F				CN-103F
335	Br/B	AVSS	0.75	CN-302F				CN-103F
336	Lg/R	AVSS	0.75	CN-302F				CN-103F
337	O/L	AVSS	0.75	CN-291F				CN-103F
338	Gr/R	AVSS	0.75	CN-291F				CN-103F
339	P	AVSS	0.75	CN-291F				CN-103F

WIRE NO.	WIRE COLOR	WIRE TYPE	SIZE	FROM	2WIRE CONNECT NO.	CONNECTION	2WIRE CONNECT NO.	TO
340	Sb	AVSS	0.75	CN-291F				CN-103F
341	W/L	AVSS	0.75	CN-291F				CN-103F
342	Br/R	AVSS	0.75	CN-103F				CN-671F
343	Y/B	AVSS	0.75	CN-291F				CN-103F
344	G/W	AVSS	0.75	CN-291F				CN-103F
345	Lg/Y	AVSS	0.75	CN-291F				CN-103F
346	R/L	AVSS	0.75	CN-291F				CN-103F
347	Y/V △35	AVSS	0.75	CN-304F				CN-105F
348	G	AVSS	0.75	CN-104F				CN-671F
349	Y	AVSS	0.75	CN-104F				CN-671F
350	L	AVSS	0.75	CN-104F				CN-671F
351	O/W	AVSS	0.75	CN-104F				CN-674M
352	O	AVSS	0.75	CN-104F				CN-688M
353	Lg/B	AVSS	0.75	CN-104F				CN-688M
354	P	AVSS	0.75	CN-104F				CN-671F
355	Gr	AVSS	0.75	CN-104F				CN-671F
356	Y/L	AVSS	0.75	CN-104F				CN-671F
357	L/B	AVSS	0.75	CN-104F				CN-671F
358	Lg/R	AVSS	0.75	CN-104F				CN-674M
359	L/Y	AVSS	0.75	CN-109F				CN-303F
360	Br/G	AVSS	0.75	CN-104F				CN-671F
361	W/R	AVSS	0.75	CN-104F				CN-671F
362	G/R	AVSS	0.75	CN-104F				CN-671F
363	R/Y	AVSS	0.75	CN-104F				CN-671F
364	Y/W	AVSS	0.75	CN-674M				CN-104F
365	L/R	AVSS	0.75	CN-105F				CN-303F
366	G/B	AVSS	0.75	CN-105F				CN-304F
367	Br	AVSS	0.75	CN-105F				CN-670M
368	O	AVSS	0.75	CN-670M				CN-105F
369	P/B	AVSS	0.75	CN-105F				CN-303F
370	R/G	AVSS	0.75	CN-670M				CN-105F
381	O/W	AVSS	0.75	CN-302F				CN-105F
382	L/W	AVSS	0.75	CN-302F				CN-105F
383	R	AVSS	0.75	CN-105F				CN-294F
384	R/W	AVSS	0.75	CN-292F				CN-105F
385	G/Y	AVSS	0.75	CN-292F				CN-105F
386	O	AVSS	0.75	CN-107F				CN-292F
387	G/L	AVSS	0.75	CN-107F				CN-670F
395	R/L	AVSS	0.75	CN-305F				JS-A3
395	R/L	AVSS	0.75	JS-A3				CN-290F
395	R/L	AVSS	0.75	JS-A3				CN-106F
398	G/W	AVSS	0.75	CN-303F				CN-106F
400	R/Y	AVSS	0.75	CN-303F				CN-106F
401	Gr/B	AVSS	0.75	CN-303F				CN-106F
402	V/W	AVSS	0.75	CN-294F				CN-106F
403	Y	AVSS	0.75	CN-106F				CN-210F
405	Y	AVSS	0.75	CN-107F				CN-215F
406	P	AVSS	0.75	CN-107F				CN-303F
407	Br	AVSS	0.75	CN-107F				CN-303F
408	Gr/B	AVSS	0.75	CN-213F				CN-107F
409	R/Y	AVSS	0.75	CN-224F				CN-300F
410	Br/L	AVSS	0.75	CN-303F				CN-107F
411	W/Y	AVSS	0.75	CN-104F				CN-JA02F
411	W/Y	AVSS	0.75	CN-688M				CN-JA02F
411	W/Y	AVSS	0.75	CN-290F				CN-JA02F
412	L/G	AVSS	0.75	CN-674M				CN-107F
413	P	AVSS	0.75	CN-109F				CN-304F
415	Gr/L	AVSS	0.75	CN-107F				CN-433F
416	B/Y	AVSS	0.75	CN-107F				CN-434F
417	R/W	AVSS	0.75	CN-107F				CN-435F
418	W/R	AVSS	0.75	CN-293F				CN-107F
419	G/Y	AVSS	0.75	CN-108F				CN-303F
420	Y/W	AVSS	0.75	CN-108F				CN-304F
421	R/Y	AVSS	0.75	CN-108F				CN-304F
422	P/L	AVSS	0.75	CN-108F				CN-304F
423	W/B	AVSS	0.75	CN-108F				CN-304F
424	L/G	AVSS	0.75	CN-108F				CN-304F
425	Y/L	AVSS	0.75	CN-108F				CN-304F
426	Gr/L	AVSS	0.75	CN-108F				CN-304F
427	R/W	AVSS	0.75	CN-108F				CN-304F
428	Gr/W	AVSS	0.75	CN-108F				CN-304F
429	G	AVSS	0.75	CN-108F				CN-291F
430	Br/Y	AVSS	0.75	CN-108F				CN-304F
431	R/G	AVSS	0.75	CN-108F				CN-304F
432	O/W	AVSS	0.75	CN-108F				CN-304F
433	P/G	AVSS	0.75	CN-108F				CN-302F
434	G/B	AVSS	0.75	CN-108F				CN-673F
435	Br/G	AVSS	0.75	CN-108F				CN-292F
436	W/Y	AVSS	0.75	CN-108F				CN-304F
437	O	AVSS	0.75	CN-108F				CN-304F
438	L/Y	AVSS	0.75	CN-209F				CN-108F
439	O/L	AVSS	0.75	CN-209F				CN-108F
440	W/R	AVSS	0.75	CN-108F				CN-304F
441	Y/B	AVSS	0.75	CN-108F				CN-292F
442	R/B	AVSS	0.75	CN-108F				CN-292F
443	O/L	AVSS	0.75	CN-109F				CN-303F
444	G/R	AVSS	0.75	CN-109F				CN-293F
445	R/Y	AVSS	0.75	CN-108F				CN-292F
446	G	AVSS	0.75	CN-109F				CN-303F
447	P	AVSS	0.75	CN-109F				CN-304F
448	G/Y	AVSS	0.75	CN-109F				CN-292F
449	Br/L	AVSS	0.75	CN-109F				CN-303F
450	P/G	AVSS	0.75	CN-109F				CN-303F
451	L/B	AVSS	0.75	CN-109F				CN-303F
452	O/B	AVSS	0.75	CN-109F				CN-303F
454	R/Y	AVSS	0.75	CN-109F				JS-A20
454	R/Y	AVSS	0.75	CN-290F				JS-A20
454	R/Y	AVSS	0.75	CN-305F				JS-A20
455	L/Y	AVSS	0.75	CN-106F			DSA73	CN-237F
455	L/Y	AVSS	0.75	CN-293F			DSA73	CN-237F
456	G/B	AVSS	0.75	CN-237F	DSA15			CN-224F
456	G/B	AVSS	0.75	CN-237F	DSA15			CN-674M
458	L/B	AVSS	0.75	CN-224F	DSA210			CN-293F
458	L/B	AVSS	0.75	CN-224F	DSA210			CN-300F
459	Lg	AVSS	0.75	CN-109F				CN-303F

WIRE NO.	WIRE COLOR	WIRE TYPE	SIZE	FROM	2WIRE CONNECT NO.	CONNECTION	2WIRE CONNECT NO.	TO
468	O	AVSS	0.75	CN-109F				CN-294F
469	L	AVSS	0.75	CN-109F				CN-301F
470	R	AVSS	0.75	CN-101F				CN-294F
472	Gr	AVSS	0.75	CN-101F				CN-292F
474	L/B	AVSS	0.75	CN-108F				CN-303F
476	O	AVSS	0.75	CN-109F				CN-292F
478	G/Y	AVSS	0.75	CN-290F				CN-305F
482	R	AVSS	0.75	CN-104F				CN-670M
483	W	AVSS	0.75	CN-104F				CN-670M
484	B	AVSS	0.75	CN-670M				CN-104F
485	Gr/L	AVSS	0.75	CN-109F				CN-292F
A41	W/B	AVSS	0.75	CN-290F				CN-305F
A42	W/L	AVSS	0.75	CN-290F				CN-305F

WIRE NO.	WIRE COLOR	WIRE TYPE	SIZE	FROM	2WIRE CONNECT NO.	CONNECTION	2WIRE CONNECT NO.	TO
700	B	AVSS	0.5	CN-281F				CN-423F
701	R	AVSS	0.5	CN-281F				CN-423F
702	W	AVSS	0.5	CN-281F				CN-423F
749	R/Y	AVSS	0.75	CN-220F	DSA94			CN-221F
749	R/Y	AVSS	0.75	CN-220F	DSA94		DSA97	CN-219F
749	R/Y	AVSS	0.75	CN-219F	DSA98		DSA97	CN-219F
749	R/Y	AVSS	0.75	CN-219F	DSA98		DSA99	CN-217F
749	R/Y	AVSS	0.75	JS-A16			DSA99	CN-217F
749	R/Y	AVSS	0.75	JS-A16				JS-A17
749	R/Y	AVSS	0.5	JS-A17				CN-11-5AF
749	R/Y	AVSS	1.25	JS-A17				CN-885F
749	R/Y	AVSS	1.25	JS-A16			DSA110	CN-206F
749	R/Y	AVSS	1.25	CN-206F	DSA100		DSA110	CN-206F
749	R/Y	AVSS	1.25	CN-206F	DSA100		DSA94	CN-433F
749	R/Y	AVSS	0.75	CN-434F	DSA93		DSA94	CN-433F
749	R/Y	AVSS	0.75	CN-434F	DSA93		DSA92	CN-435F
749	R/Y	AVSS	0.75	CN-205F	DSA91		DSA92	CN-435F
749	R/Y	AVSS	0.75	CN-205F	DSA91		DSA90	CN-204F
749	R/Y	AVSS	0.75	CN-203F	DSA89		DSA90	CN-204F
749	R/Y	AVSS	0.75	CN-203F	DSA89		DSA88	CN-203F
749	R/Y	AVSS	0.75	CN-202F	DSA87		DSA88	CN-203F
749	R/Y	AVSS	0.75	CN-202F	DSA87		DSA86	CN-202F
749	R/Y	AVSS	0.75	CN-201F	DSA85		DSA86	CN-202F
749	R/Y	AVSS	0.75	CN-201F	DSA85		DSA84	CN-201F
749	R/Y	AVSS	0.75	CN-209F	DSA83		DSA84	CN-201F
749	R/Y	AVSS	0.75	CN-209F	DSA83		DSA82	CN-209F
749	R/Y	AVSS	0.75	CN-208F	DSA81		DSA82	CN-209F
749	R/Y	AVSS	0.75	CN-208F	DSA81		DSA80	CN-207F
749	R/Y	AVSS	0.75	CN-215F	DSA102		DSA80	CN-207F
749	R/Y	AVSS	0.75	CN-215F	DSA102		DSA103	CN-214F
749	R/Y	AVSS	0.75	CN-213F	DSA105		DSA103	CN-214F
749	R/Y	AVSS	0.75	CN-213F	DSA105		DSA107	CN-212F
749	R/Y	AVSS	0.75	CN-211F	DSA109		DSA107	CN-212F
749	R/Y	AVSS	0.75	CN-211F	DSA109			CN-210F
750	W/R	AVSS	1.25	CN-206F	DSA101			CB-A01
750	W/R	AVSS	1.25	CN-206F	DSA101			CN-293F
751	G/R	AVSS	0.75	CN-204F				CN-670M
752	Lg/R	AVSS	0.75	CN-670M				CN-205F
753	Gr/R	AVSS	0.75	CN-672F			DSA208	CN-207F
753	Gr/R	AVSS	0.75	CN-106F			DSA208	CN-207F
754	Y/R	AVSS	0.75	CN-208F				CN-300F
755	R	AVSS	0.75	CN-229F				CB-A02
801	G	AVSS	1.25	CN-230F				CN-231F
802	Lg	AVSS	1.25	CN-230F				CN-231F
803	O	AVSS	1.25	CN-202F				CN-231F
804	Gr	AVSS	1.25	CN-231F				CN-202F
805	L	AVSS	1.25	CN-233F				CN-232F
806	P	AVSS	0.75	CN-233F				CN-232F
807	R	AVSS	1.25	CN-233F				CN-203F
808	Br	AVSS	1.25	CN-203F				CN-233F
809	G/W	AVSS	0.75	CN-201F				CN-670M
810	Br/G	AVSS	0.75	CN-201F				CN-670M
857	O/W	AVSS	0.75	CN-211F				CN-234F
858	Br/G	AVSS	0.75	CN-300F				CN-212F
900	Lg/Y	AVSS	0.75	CN-293F				CN-221F
901	Y/L	AVSS	0.75	CN-220F				CN-293F
922	Br/W	AVSS	0.75	CN-300F				CN-217F
951	O	AVSS	0.75	CN-290F				CN-305F
962	L/G	AVSS	0.75	CN-303F				CN-109F
966	W/O	AVSS	0.75	CN-301F				CN-894F
972	G/L	AVSS	0.75	CN-292F				CN-104F
973	O/L	AVSS	0.75	CN-292F				CN-104F
974	Gr/R	AVSS	0.75	CN-104F				JS-A21
974	Gr/R	AVSS	0.75	CN-104F				JS-A21
974	Gr/R	AVSS	0.75	CN-292F				JS-A21
975	G	AVSS	0.75	CN-888F				CN-307F
976	L	AVSS	0.75	CN-888F				JS-A22
976	L	AVSS	0.75	CN-294F				JS-A22
976	L	AVSS	0.75	CN-107F				JS-A22
977	G/Y	AVSS	0.5	CN-11-5AF				CN-307F
978	Y/G	AVSS	0.5	CN-11-5AF				CN-294F
987	L/O	AVSS	0.75	CN-300F				CN-878F
ES3	B/R	AVSS	0.75	CN-JA05F				CN-11-1BF
ES1	B/R	AVSS	0.75	CN-JA05F				CN-307F
ES2	B/R	AVSS	0.75	CN-JA05F				CN-295F
ESJP	B/R	AVSS	0.75	CN-JA05F				CN-JA05F
ES4	B/R	AVSS	0.75	CN-298F				CN-JA05F
ES5	B/R	AVSS	0.75	CN-296F				CN-JA05F
ES7	B/R	AVSS	0.75	CN-298F				CN-JA05F
ES8	B/R	AVSS	0.75	CN-307F				CN-JA05F
114	R	AVSS	0.75	CN-JA03F				CN-11-1BF
115	G	AVSS	0.75	CN-JA03F				CN-11-1BF
114	R	AVSS	0.5	CN-JA03F				CN-282F
115	G	AVSS	0.5	CN-JA03F				CN-282F
114	R	AVSS	0.75	CN-JA03F				CN-101F
115	G	AVSS	0.75	CN-JA03F				CN-101F
114	R	AVSS	0.75	CN-JA03F				CN-673F
115	G	AVSS	0.75	CN-JA03F				CN-673F
114	R	AVSS	0.75	CN-JA03F				CN-CANAF
115	G	AVSS	0.75	CN-JA03F				CN-CANAF
119	Y	AVSS	0.75	CN-JA06F				CN-11-1BF
120	L	AVSS	0.75	CN-JA06F				CN-11-1BF
119	Y	AVSS	0.75	CN-JA06F				CN-300F
120	L	AVSS	0.75	CN-JA06F				CN-300F
119	Y	AVSS	0.75	CN-JA06F				CN-101F
120	L	AVSS	0.75	CN-JA06F				CN-101F
119	Y	AVSS	0.5	CN-JA06F				CN-282F
120	L	AVSS	0.5	CN-JA06F				CN-282F
119	Y	AVSS	0.75	CN-JA06F				CN-CANBF
120	L	AVSS	0.75	CN-JA06F				CN-CANBF

WIRE NO.	WIRE COLOR	WIRE TYPE	SIZE	FROM	2WIRE CONNECT NO.	CONNECTION	2WIRE CONNECT NO.	TO
371	G	AVSS	0.75	CN-105F				CN-291F
380	W	AVSS	0.75	CN-105F				CN-291F
372	R/Y	AVSS	0.75	CN-105F				CN-673F
373	W/B	AVSS	0.75	CN-105F				CN-673F
374	L/G	AVSS	0.75	CN-105F				CN-673F
375	Br/R	AVSS	0.75	CN-105F				CN-673F
376	O/L	AVSS	0.75	CN-105F				CN-673F
377	Gr/L	AVSS	0.75	CN-105F				CN-673F
378	P/W	AVSS	0.75	CN-105F				CN-301F
379	Y/G	AVSS	0.75	CN-105F				CN-301F
388	B/Y	AVSS	0.75	CN-106F				CN-301F
389	G/R	AVSS	0.75	CN-106F				CN-301F
390	L/O	AVSS	0.75	CN-106F				CN-301F
391	Br	AVSS	0.75	CN-106F				CN-301F
392	O/B	AVSS	0.75	CN-106F				CN-291F
393	Sb	AVSS	0.75	CN-106F				CN-291F
396	P/W	AVSS	0.75	CN-106F				CN-291F
397	Lg/W	AVSS	0.75	CN-106F				CN-291F
488	P/G	AVSS	0.75	CN-301F				CN-106F
489	G	AVSS	0.75	CN-301F				CN-106F
490	P/L	AVSS	0.75	CN-300F				CN-106F
491	Gr/W	AVSS	0.75	CN-300F				CN-106F
492	R/B	AVSS	0.75	CN-300F				CN-105F
493	W/Y	AVSS	0.75	CN-300F				CN-105F
851	R/W	AVSS	0.75	CN-226F				CN-227F
852	B	AVSS	0.75	CN-226F				CN-227F
853	P/W	AVSS	0.75	CN-226F				CN-228F
854	Gr/B	AVSS	0.75	CN-226F				CN-228F
855	L/W	AVSS	0.75	CN-293F				CN-225F
856	Lg/B	AVSS	0.75	CN-293F				CN-225F
304	R	MVVS	0.75	CN-101F				CN-421F
305	W	MVVS	0.75	CN-101F				CN-421F
306	G	MVVS	0.75	CN-101F				CN-421F
307	B	MVVS	0.75	CN-101F				CN-421F
508	W	MVVS	0.75	CN-294F				CN-422F
509	R	MVVS	0.75	CN-294F				CN-422F
510	B	MVVS	0.75	CN-294F				CN-422F
511	G	MVVS	0.75	CN-294F				CN-422F
E0	B	AVSS	1.25	CN-439F				CN-300F
E0	B	AVSS	1.25	CN-439F				CN-879M
E0	B	AVSS	0.75	CA-A03				CN-879M
E0	B	AVSS	0.75	CA-A03				JS-A8
E0	B	AVSS	0.75	JS-A08				CN-226F
E0	B	AVSS	0.75	JS-A08				CN-231F
E0	B	AVSS	0.75	CN-233F				CN-231F
E0	B	AVSS	0.75	CN-233F	DSA133		DSA134	CN-234F
E0	B	AVSS	0.75	CN-240F	DSA172		DSA134	CN-234F
E0	B	AVSS	0.75	CN-240F	DSA172		DSA138	CN-240F
E0	B	AVSS	0.75	CN-221F	DSA139		DSA138	CN-240F
E0	B	AVSS	0.75	CN-221F	DSA139		DSA140	CN-220F
E0	B	AVSS	0.75	CN-219F	DSA141		DSA140	CN-220F
E0	B	AVSS	0.75	CN-219F	DSA141		DSA142	CN-219F
E0	B	AVSS	0.75	CN-217F	DSA143		DSA142	CN-219F
E0	B	AVSS	0.75	CN-217F	DSA143		DSA144	CB-A04
E0	B	AVSS	0.75	CA-A01	DSA168		DSA144	CB-A04
E0	B	AVSS	0.75	CA-A01	DSA168		DSA52	CN-433F
E0	B	AVSS	0.75	CN-434F	DSA145		DSA52	CN-433F
E0	B	AVSS	0.75	CN-434F	DSA145		DSA146	CN-435F
E0	B	AVSS	0.75	CN-206F	DSA147		DSA146	CN-435F
E0	B	AVSS	0.75	CN-206F	DSA147		DSA167	CN-205F
E0	B	AVSS	0.75	CN-204F	DSA148		DSA167	CN-205F
E0	B	AVSS	0.75	CN-204F	DSA148		DSA149	CN-203F
E0	B	AVSS	0.75	CN-203F	DSA154		DSA149	CN-203F
E0	B	AVSS	0.75	CN-203F	DSA154		DSA152	CN-202F
E0	B	AVSS	0.75	CN-202F	DSA150		DSA152	CN-202F
E0	B	AVSS	0.75	CN-202F	DSA150		DSA156	CN-201F
E0	B	AVSS	0.75	CN-201F	DSA157		DSA156	CN-201F
E0	B	AVSS	0.75	CN-201F	DSA157		DSA158	CN-209F
E0	B	AVSS	0.75	CN-209F	DSA159		DSA158	CN-209F
E0	B	AVSS	0.75	CN-209F	DSA159		DSA160	CN-208F
E0	B	AVSS	0.75	CN-207F	DSA161		DSA160	CN-208F
E0	B	AVSS	0.75	CN-207F	DSA161		DSA162	CN-210F
E0	B	AVSS	0.75	CN-211F	DSA163		DSA162	CN-210F
E0	B	AVSS	0.75	CN-211F	DSA163		DSA164	CN-212F
E0	B	AVSS	0.75	CN-213F	DSA165		DSA164	CN-212F
E0	B	AVSS	0.75	CN-213F	DSA165		DSA171	CN-214F
E0	B	AVSS	0.75	CN-215F	DSA170		DSA171	CN-214F
E0	B	AVSS	0.75	CN-215F	DSA170		DSA205	CN-225F
E0	B	AVSS	0.75	JS-A301			DSA205	CN-225F
E0	B	AVSS	0.75	JS-A301				CN-299F
E0	B	AVSS	1.25	JS-A301				JS-A302
E0	B	AVSS	1.25	CN-294F				JS-A302
E0	B	AVSS	0.75	JS-A303				JS-A302
E0	B	AVSS	1.25	JS-A303				CN-304F
E0	B	AVSS	1.25	JS-A303				JS-A304
E0	B	AVSS	0.75	CN-885F				JS-A304
E0	B	AVSS	1.25	CN-232F	DSA301			JS-A304
E0	B	AVSS	1.25	CN-232F	DSA301			CN-230F
E1	B/W	AVSS	1.25	CN-JA12F				CN-672F
E1	B/W	AVSS	0.75	CN-JA12F				CN-11-1AF
E1	B/W	AVSS	0.75	CN-JA12F				CN-11-1AF
E2	B/W	AVSS	1.25	CN-JA12F				CN-672F
E2	B/W	AVSS	0.75	CN-JA12F				CN-11-4F
E2	B/W	AVSS	0.75	CN-JA12F				CN-11-4F
E3	B/W	AVSS	1.25	CN-105F				CN-672F
E4	B/W	AVSS	1.25	CN-105F				CN-672F
E5	B/W	AVSS	1.25	CN-672F				CN-105F
E10	B/W	AVSS	0.5	CN-281F				CN-672F

Reference Only

(5/5)

8. SWING FRAME

- **GH**

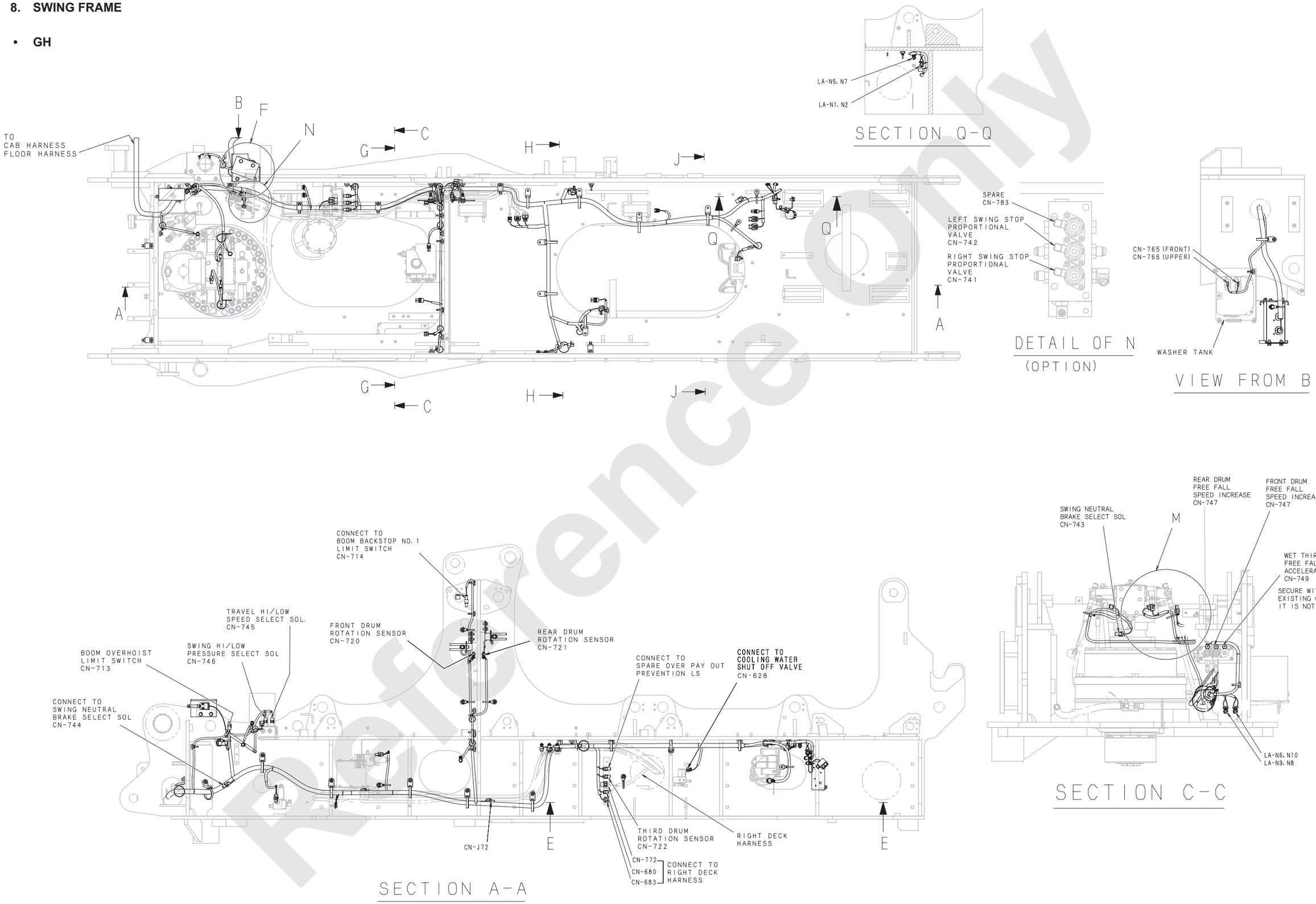

Reference Only

(1/3)

- **GH**

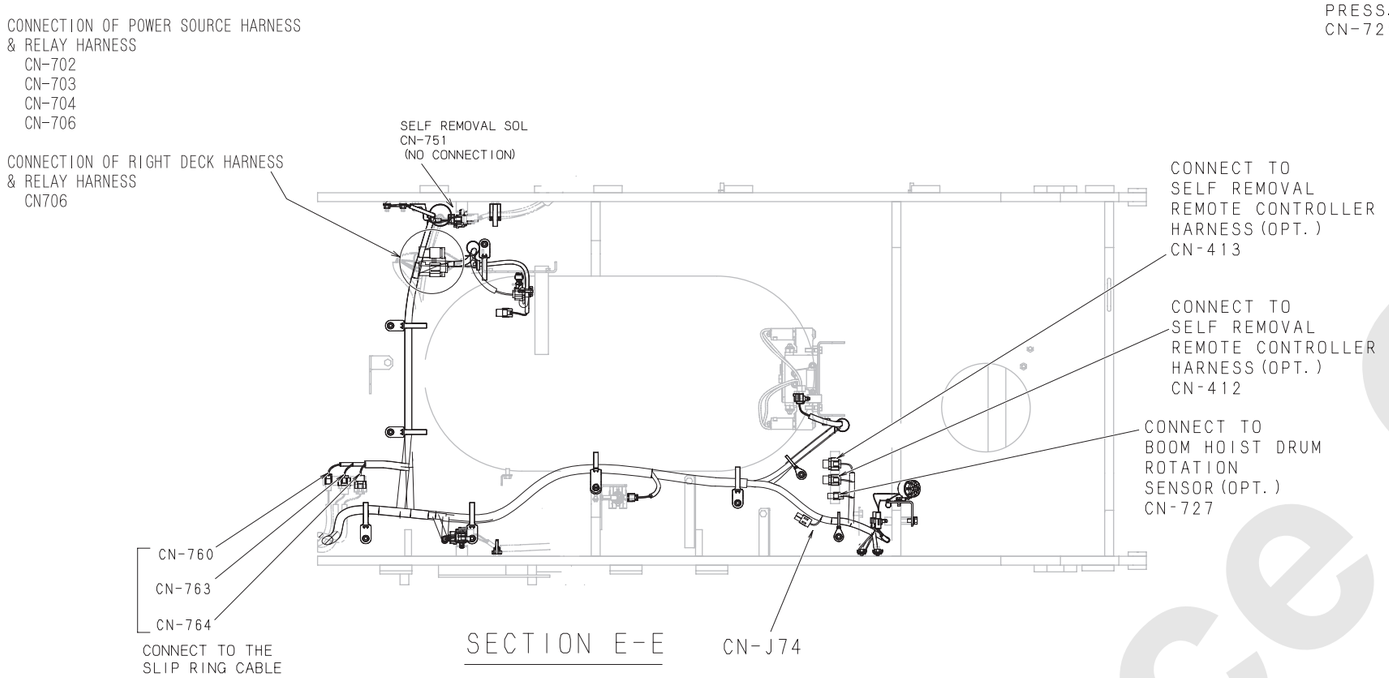

SECTION E-E

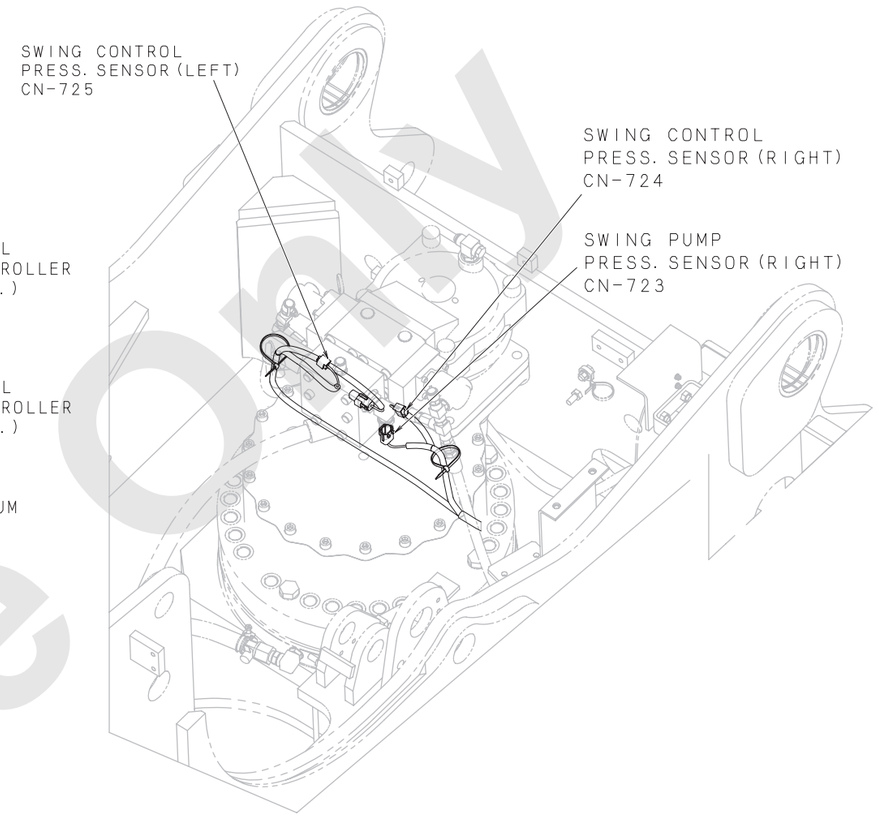

DETAIL OF M

SWING NEUTRAL
BRAKE(OPT.)SPEC.

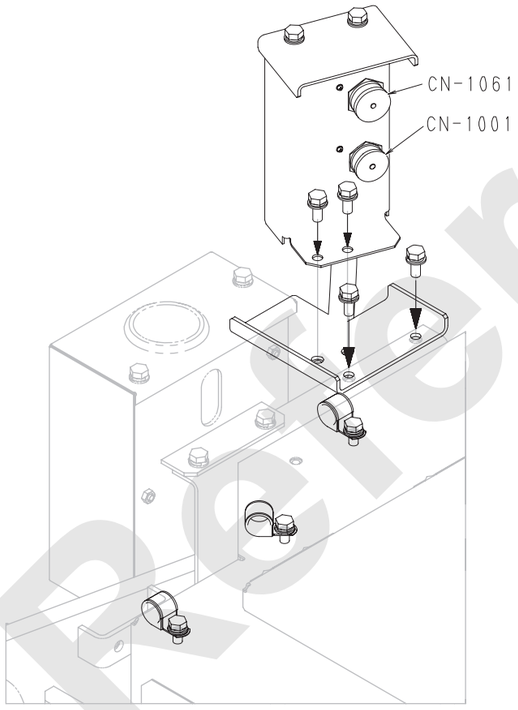

DETAIL OF F

Reference Only

(2/3)

- **GH**

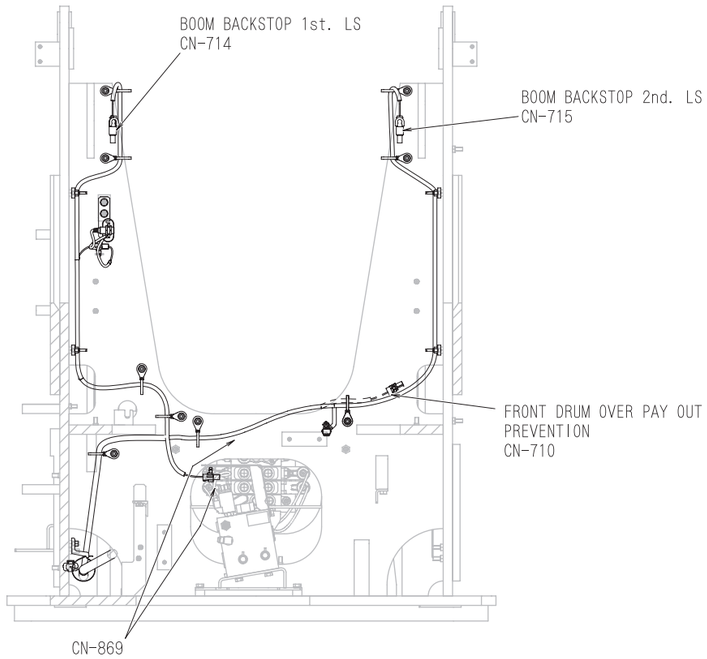

SECTION G-G

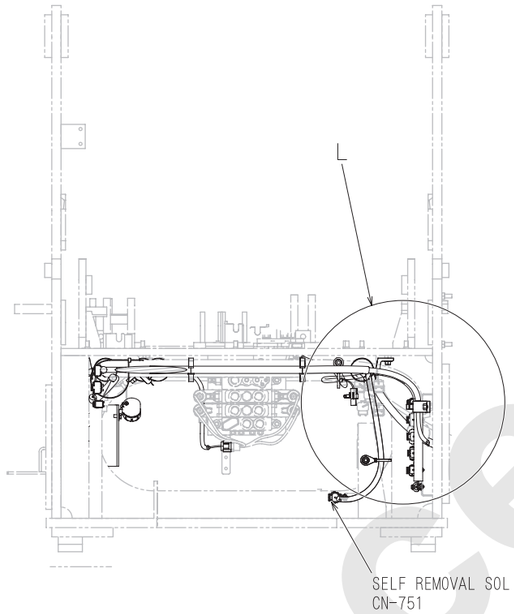

SECTION H-H

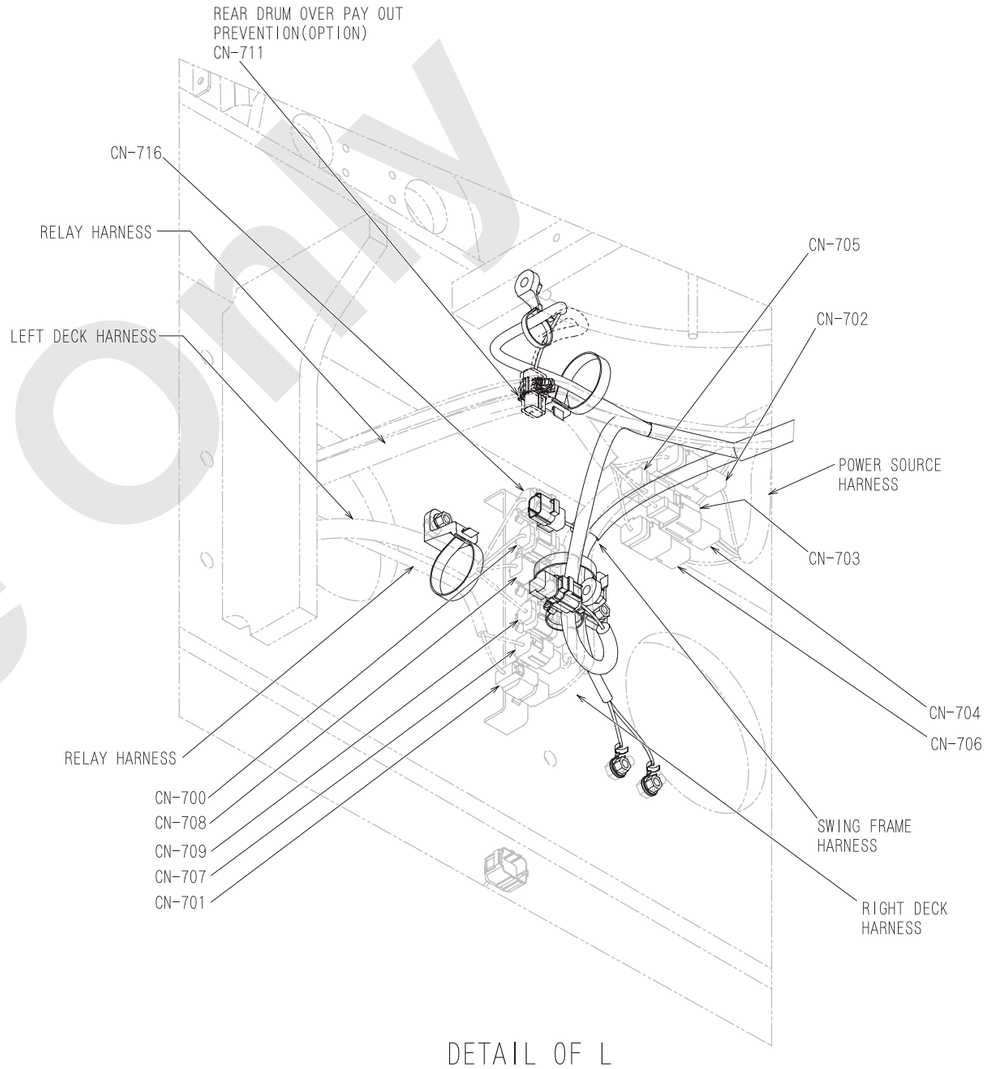

DETAIL OF L

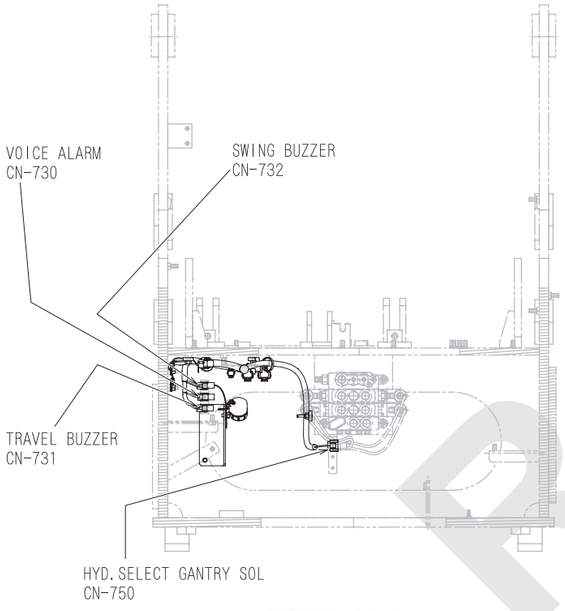

SECTION J-J

Reference Only

(3/3)

- **GG**

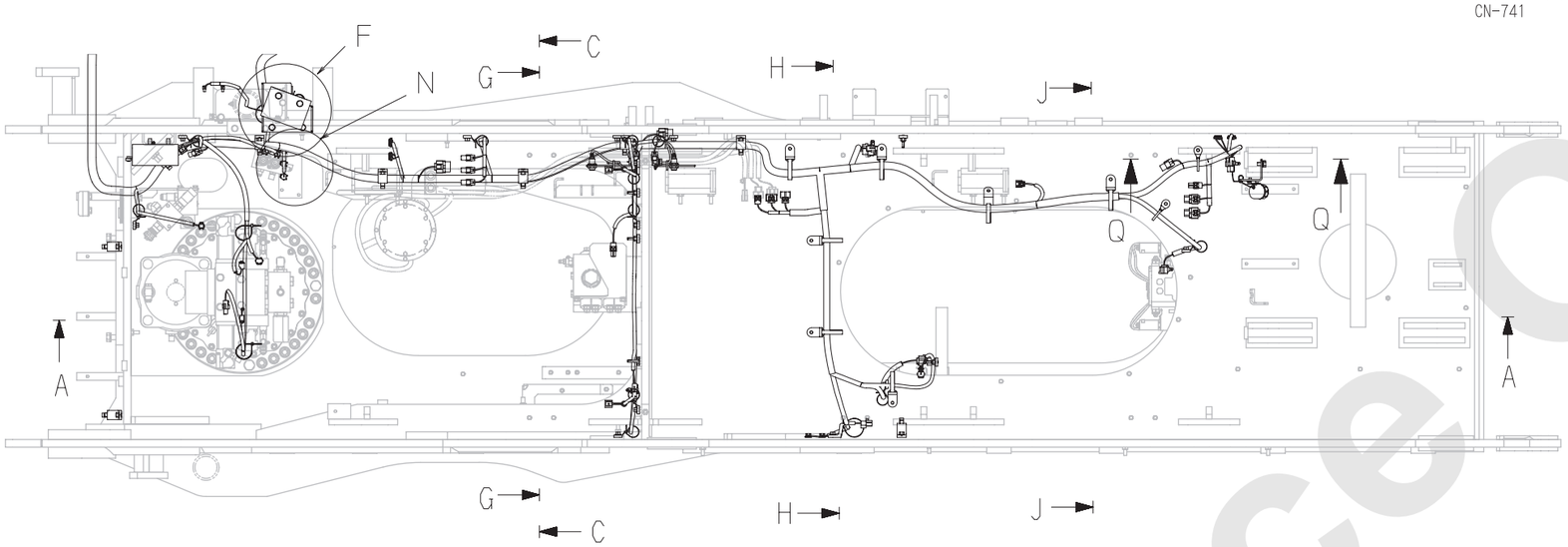

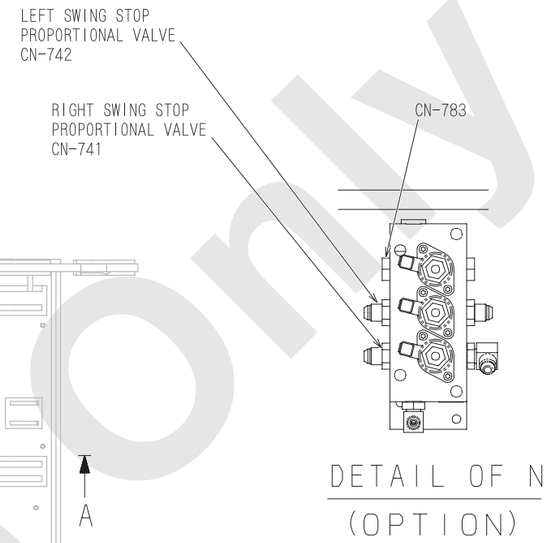

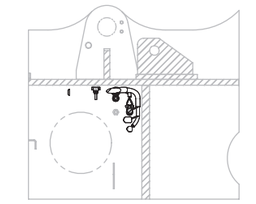

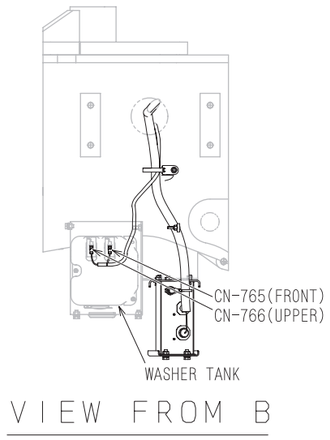

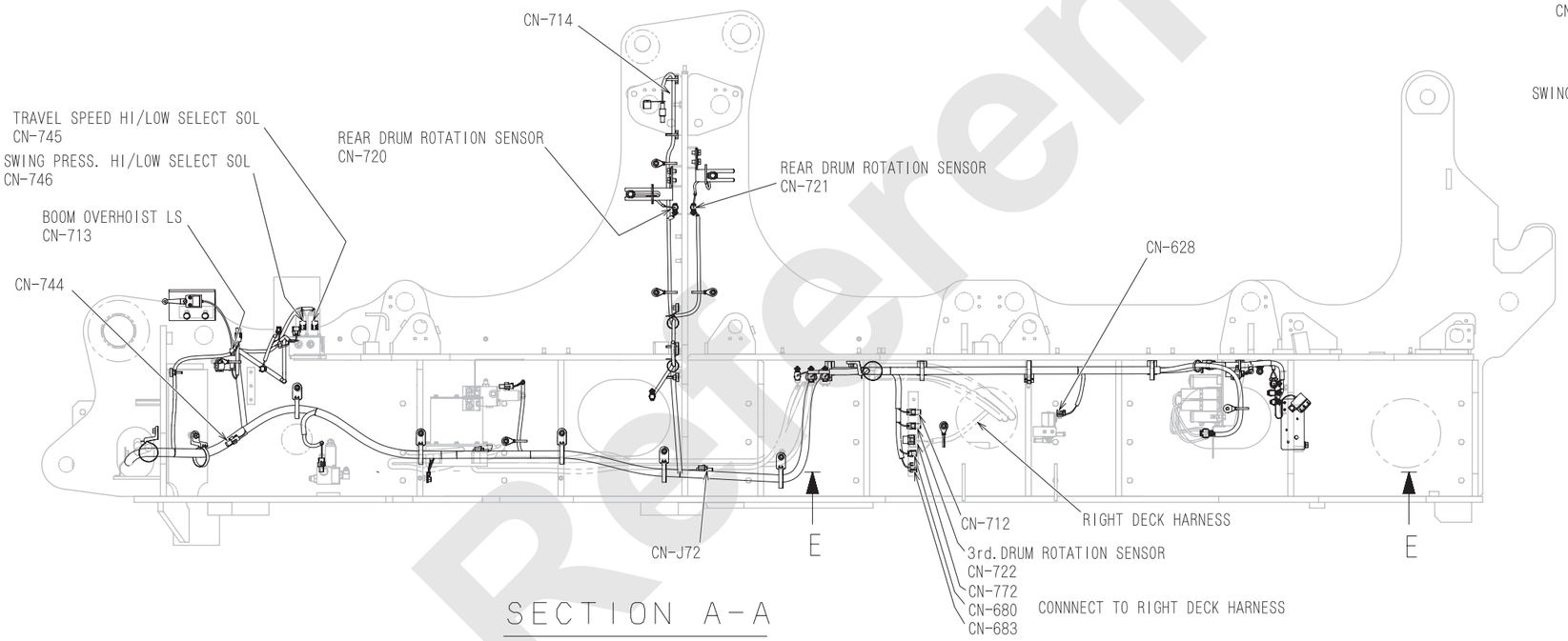

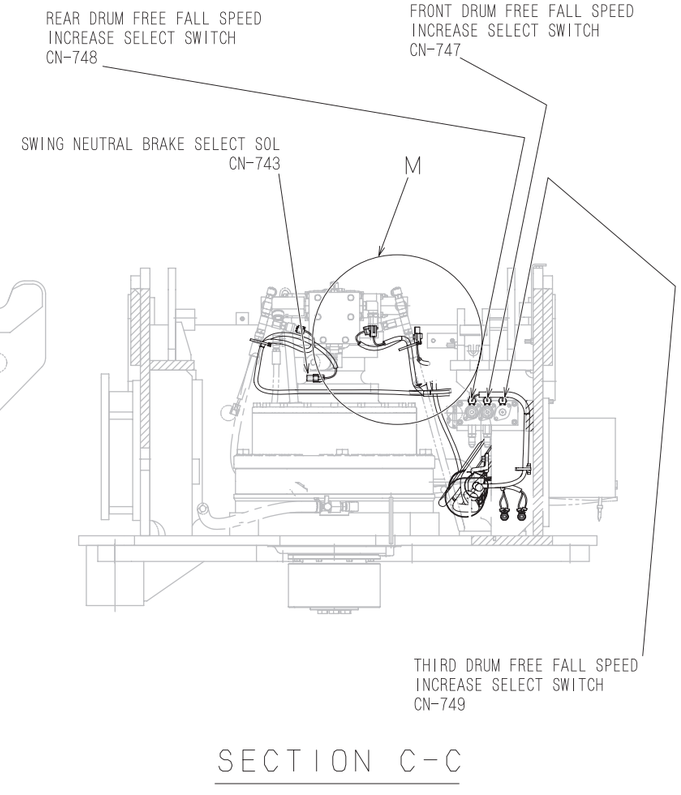

(1/3)

Reference Only

- **GG**

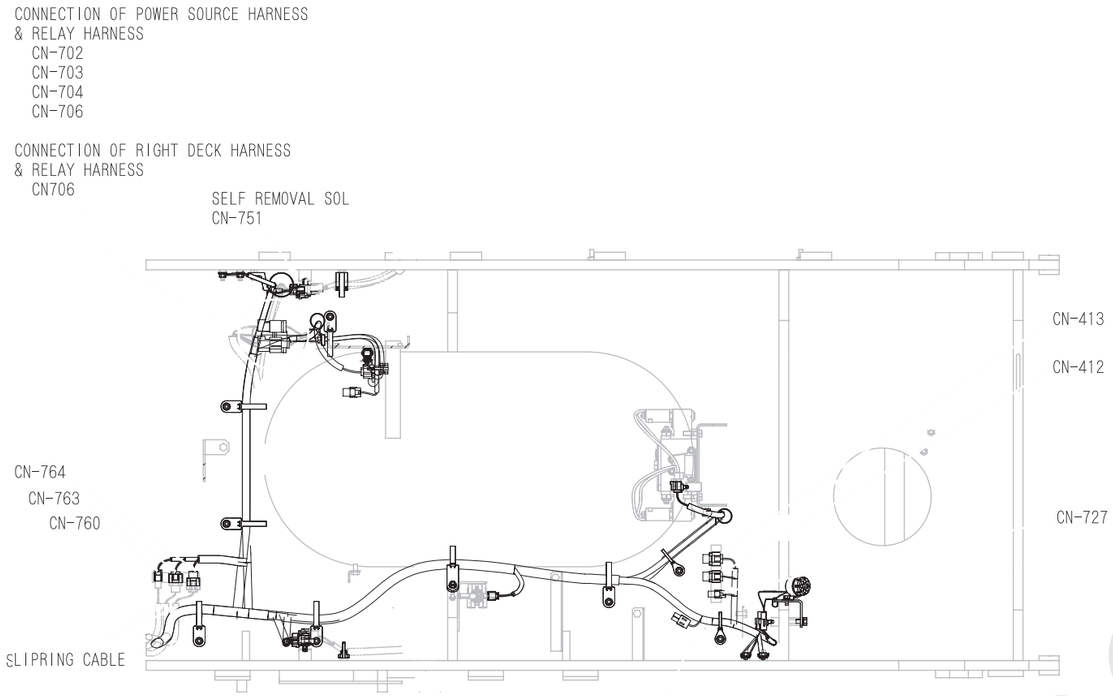

SECTION E-E

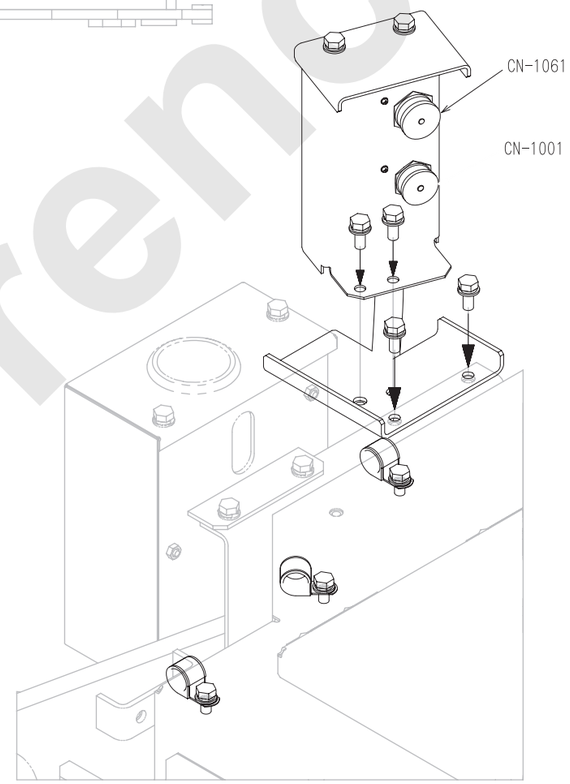

DETAIL OF F

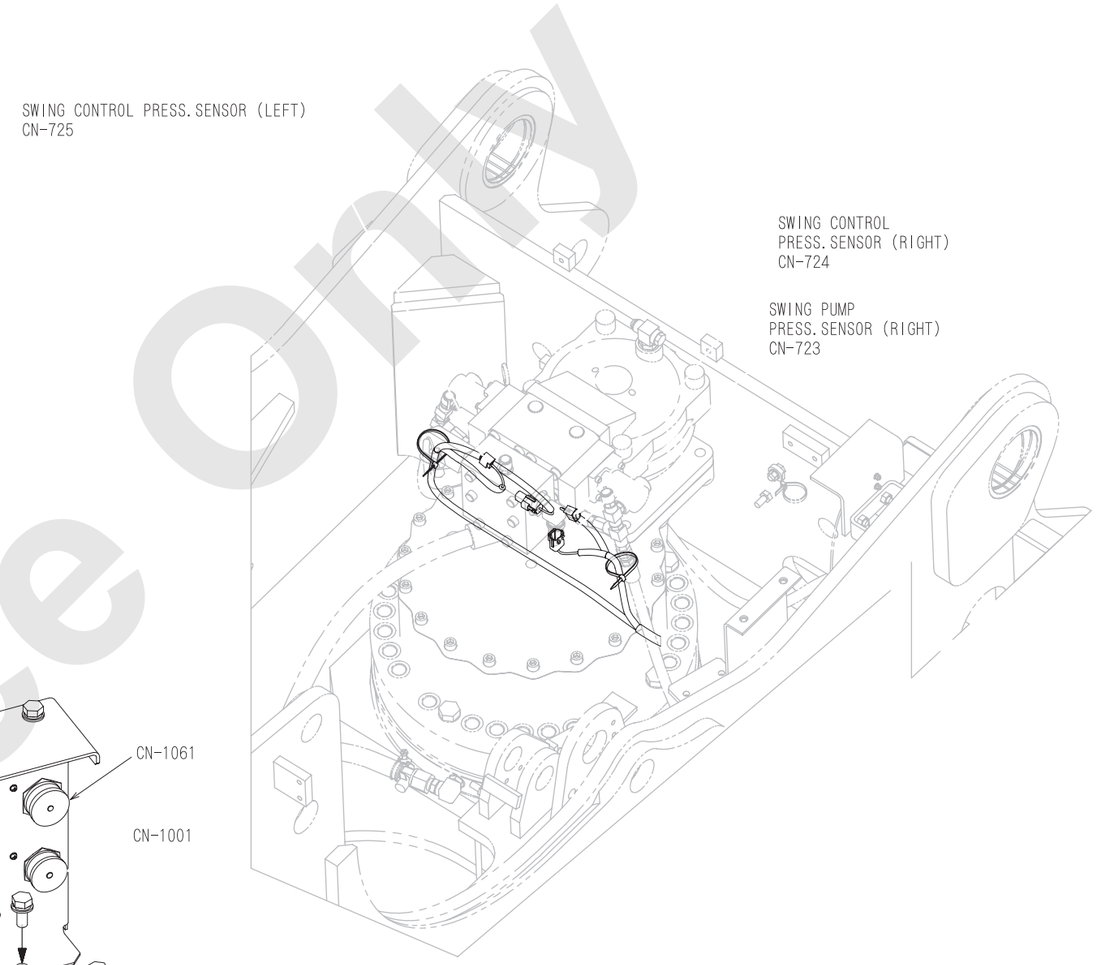

DETAIL OF M

SWING NEUTRAL
BRAKE (OPT.) SPEC.

Reference Only

(2/3)

- **GG**

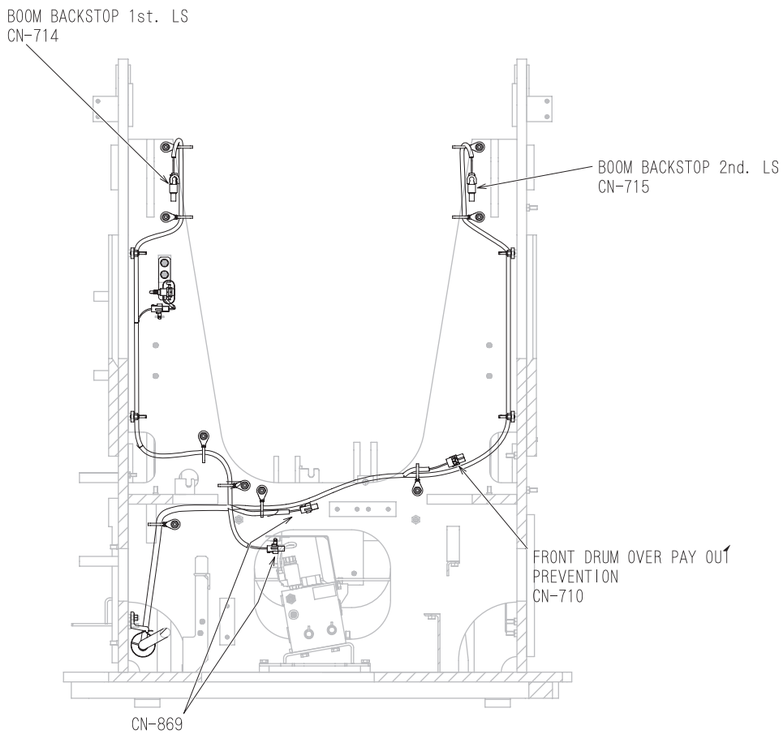

SECTION G-G

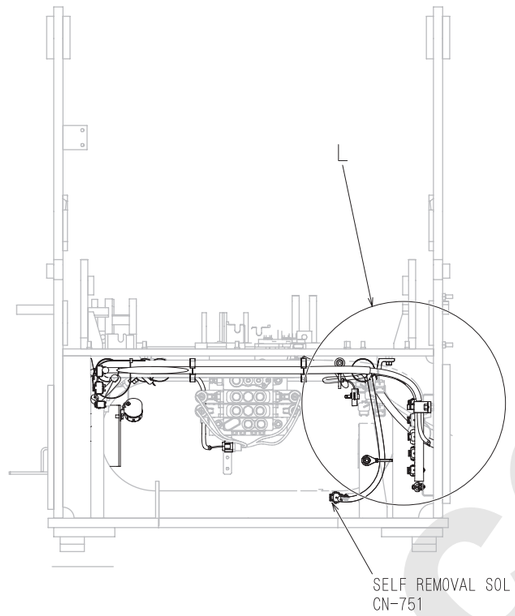

SECTION H-H

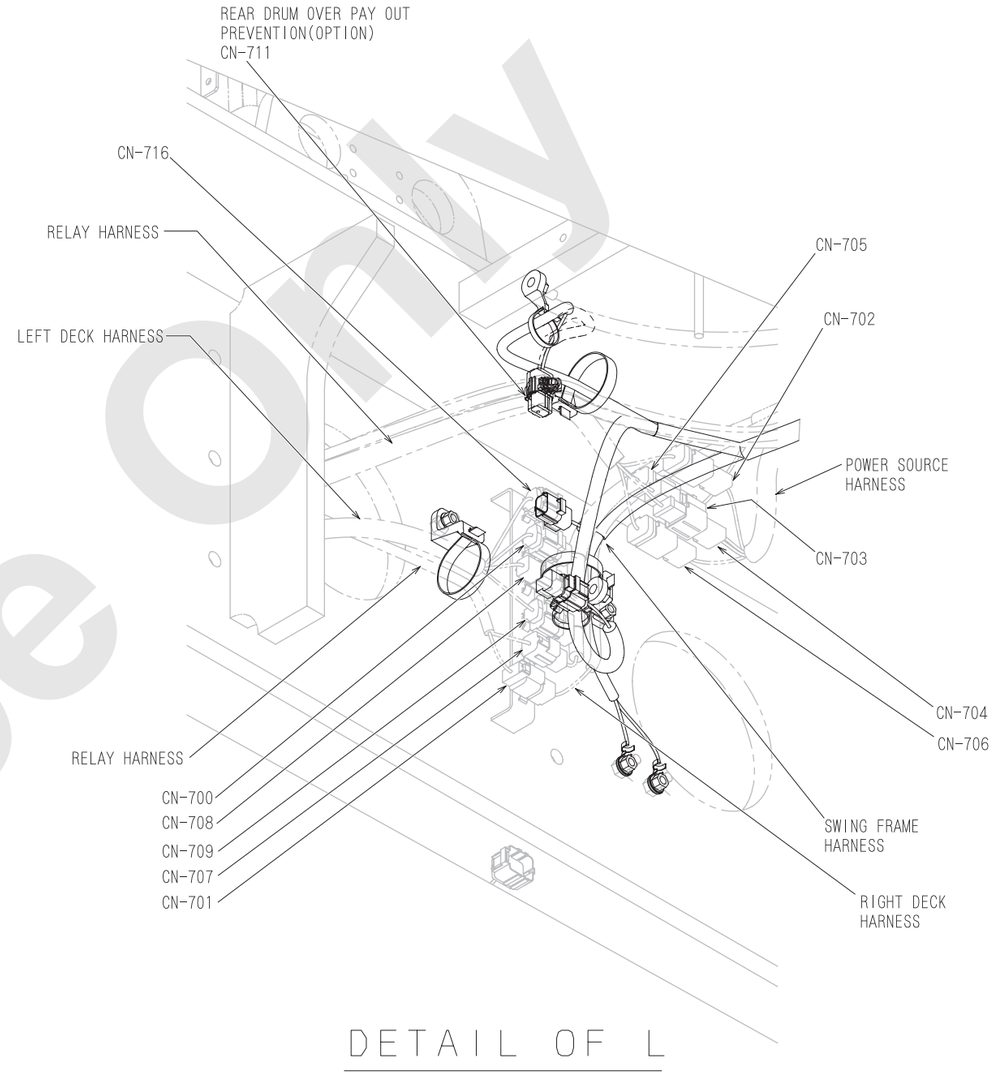

DETAIL OF L

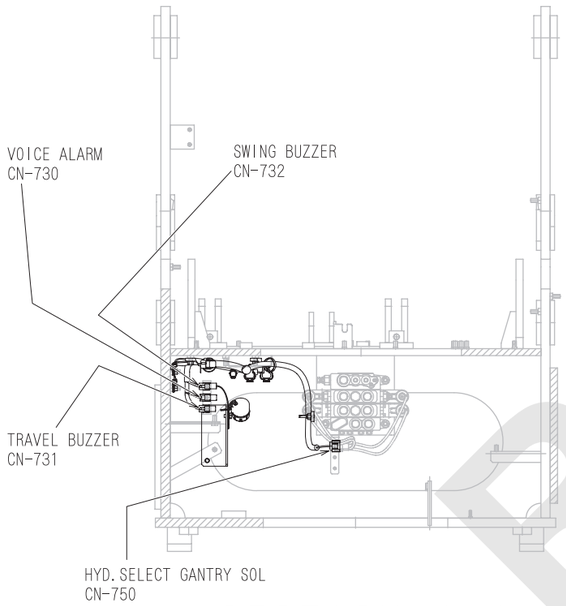

SECTION J-J

Reference Only

(3/3)

SWING FRAME HARNESS

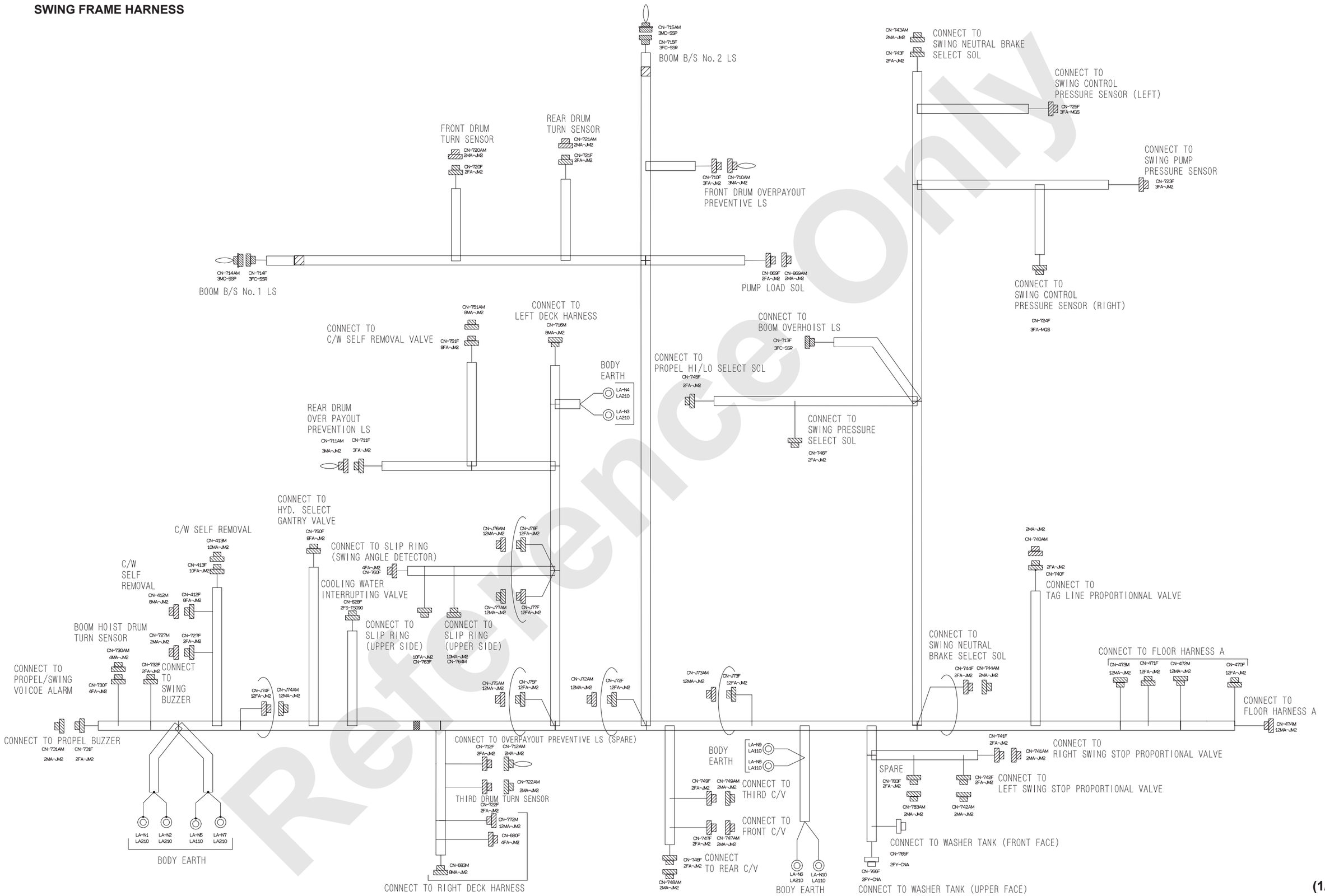

(1/5)

Reference Only

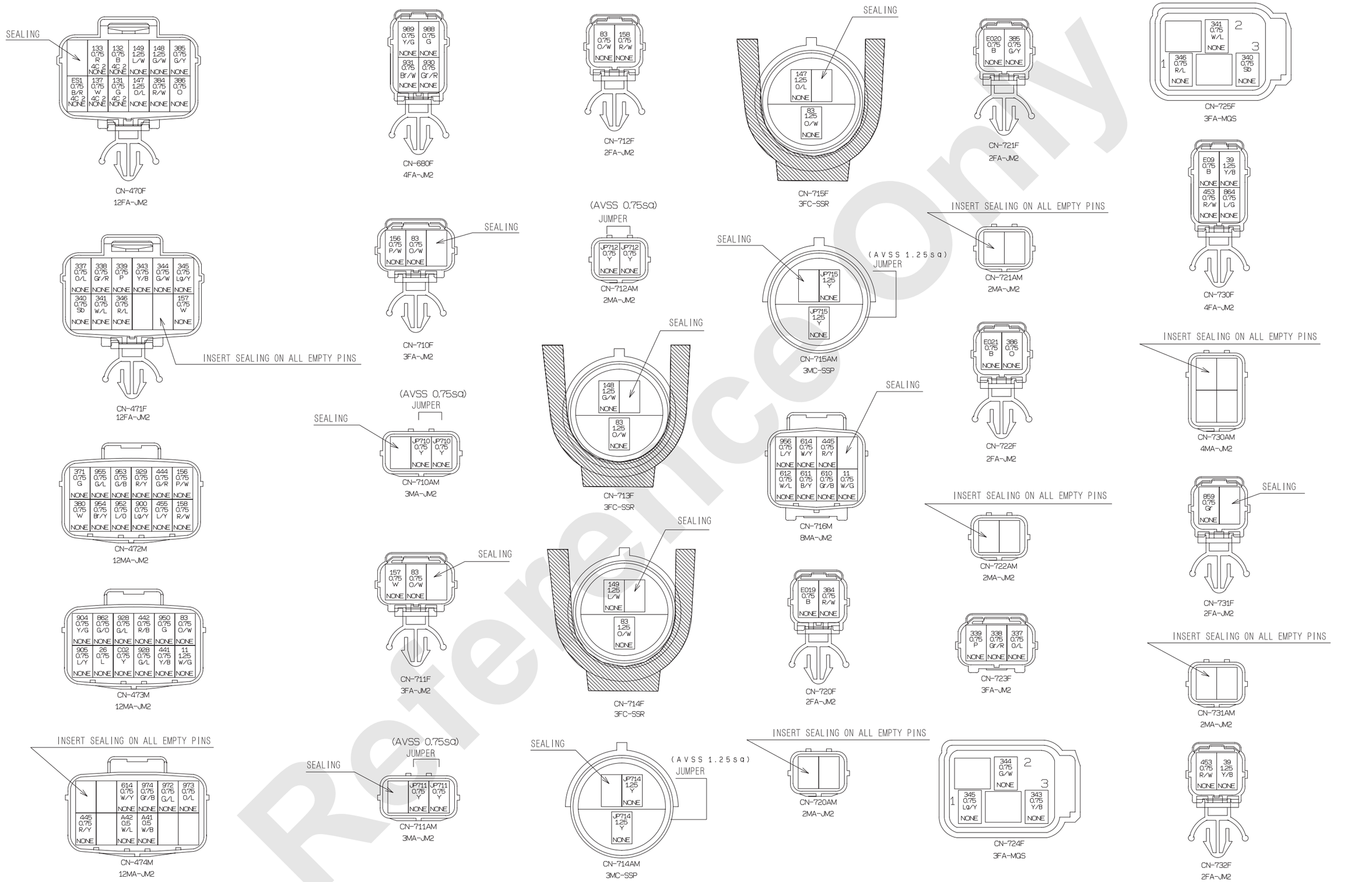

Reference Only

(2/5)

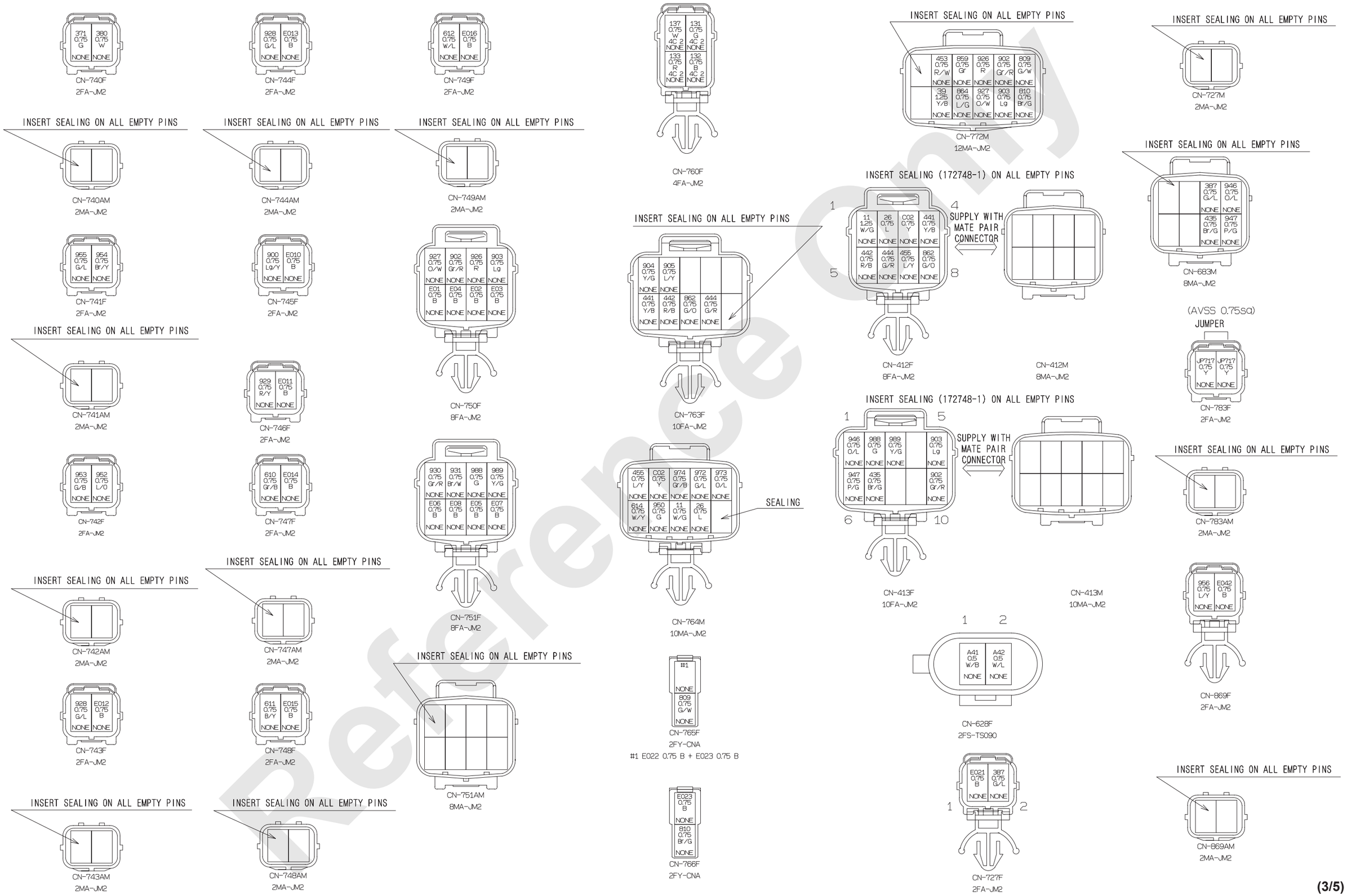

(3/5)

Reference Only

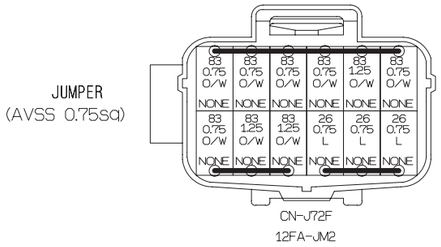

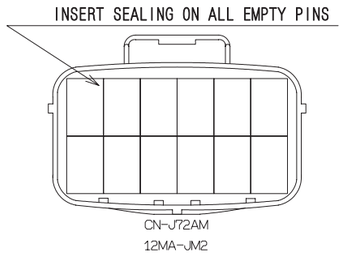

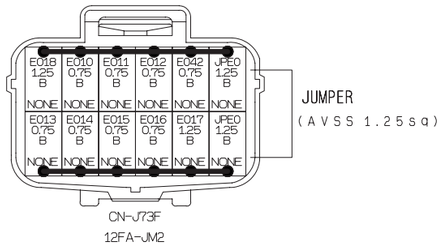

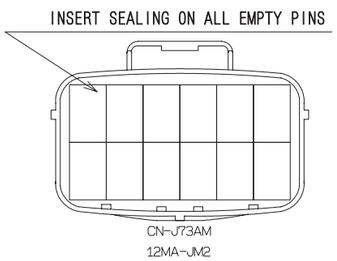

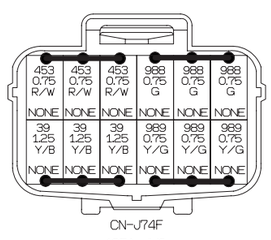

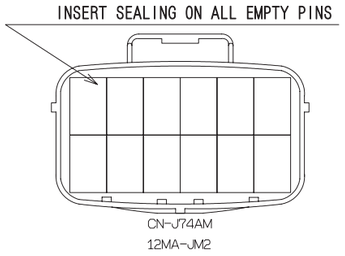

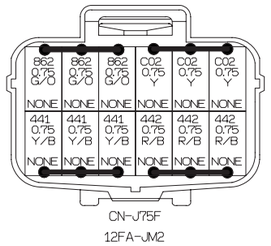

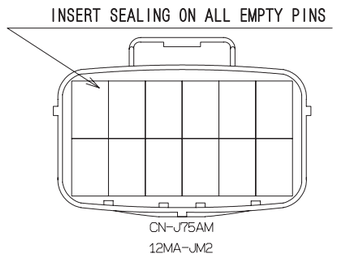

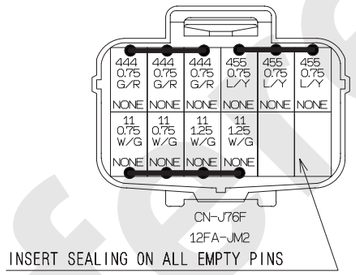

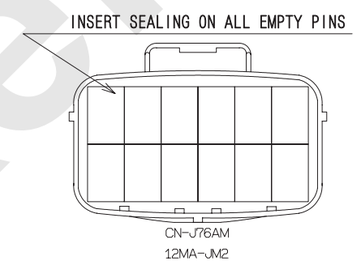

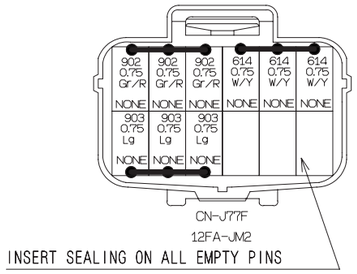

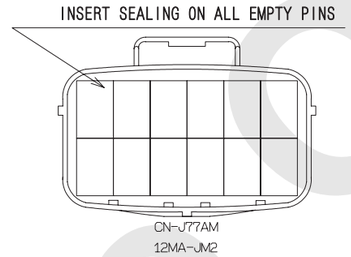

LA-N1
LA210
#1 E01 0.75 B + E02 0.75 B

LA-N2
LA210
#1 E03 0.75 B + E04 0.75 B

LA-N3
LA210
#1 E05 0.75 B + E06 0.75 B

LA-N4
LA210
#1 E07 0.75 B + E08 0.75 B

LA-N5
LA110

LA-N6
LA210
#1 E019 0.75 B + E020 0.75 B

LA-N7
LA210
#1 E021 0.75 B + E021 0.75 B

LA-N8
LA110

LA-N9
LA110

LA-N10
LA110

Reference Only

(4/5)

THE WIRE NO./COLOR LIST

※1 IDENTIFICATION SYMBOL
※2 TWO WIRE CONNECT NUMBER

WIRE NO.	WIRE COLOR	WIRE TYPE	SIZE	F R O M	※1	※2	CONNECTION	※2	※1	T O
11	W/G	AVSS	0.75	CN-J76F						CN-764M
11	W/G	AVSS	0.75	CN-J76F						CN-716M
11	W/G	AVSS	1.25	CN-J76F						CN-473M
11	W/G	AVSS	1.25	CN-J76F						CN-412F
26	L	AVSS	0.75	CN-J72F						CN-412F
26	L	AVSS	0.75	CN-J72F						CN-473M
26	L	AVSS	0.75	CN-J72F						CN-764M
39	Y/B	AVSS	1.25	CN-J74F						CN-772M
39	Y/B	AVSS	1.25	CN-J74F						CN-730F
39	Y/B	AVSS	1.25	CN-J74F						CN-732F
83	O/W	AVSS	0.75	CN-J72F						CN-473M
83	O/W	AVSS	0.75	CN-J72F						CN-710F
83	O/W	AVSS	0.75	CN-J72F						CN-711F
83	O/W	AVSS	0.75	CN-J72F						CN-712F
83	O/W	AVSS	1.25	CN-J72F						CN-714F
83	O/W	AVSS	0.75	CN-J72F						CN-J72F
83	O/W	AVSS	1.25	CN-715F						CN-J72F
83	O/W	AVSS	1.25	CN-713F						CN-J72F
147	O/L	AVSS	1.25	CN-715F						CN-470F
148	G/W	AVSS	1.25	CN-713F						CN-470F
149	L/W	AVSS	1.25	CN-470F						CN-714F
156	P/W	AVSS	0.75	CN-472M						CN-710F
157	W	AVSS	0.75	CN-471F						CN-711F
158	R/W	AVSS	0.75	CN-472M						CN-712F
337	O/L	AVSS	0.75	CN-723F						CN-471F
338	Gr/R	AVSS	0.75	CN-723F						CN-471F
339	P	AVSS	0.75	CN-723F						CN-471F
340	Sb	AVSS	0.75	CN-725F						CN-471F
341	W/L	AVSS	0.75	CN-725F						CN-471F
343	Y/B	AVSS	0.75	CN-724F						CN-471F
344	G/W	AVSS	0.75	CN-724F						CN-471F
345	Lg/Y	AVSS	0.75	CN-724F						CN-471F
346	R/L	AVSS	0.75	CN-725F						CN-471F
384	R/W	AVSS	0.75	CN-720F						CN-470F
385	G/Y	AVSS	0.75	CN-721F						CN-470F
386	O	AVSS	0.75	CN-470F						CN-722F
387	G/L	AVSS	0.75	CN-683M						CN-727F
435	Br/G	AVSS	0.75	CN-683M						CN-413F
441	Y/B	AVSS	0.75	CN-J75F						CN-412F
441	Y/B	AVSS	0.75	CN-J75F						CN-473M
441	Y/B	AVSS	0.75	CN-J75F						CN-763F
442	R/B	AVSS	0.75	CN-J75F						CN-412F
442	R/B	AVSS	0.75	CN-J75F						CN-473M
442	R/B	AVSS	0.75	CN-J75F						CN-763F
444	G/R	AVSS	0.75	CN-J76F						CN-412F
444	G/R	AVSS	0.75	CN-J76F						CN-472M
444	G/R	AVSS	0.75	CN-J76F						CN-763F
445	R/Y	AVSS	0.75	CN-474M						CN-716M
453	R/W	AVSS	0.75	CN-J74F						CN-772M
453	R/W	AVSS	0.75	CN-J74F						CN-732F
453	R/W	AVSS	0.75	CN-J74F						CN-730F
455	L/Y	AVSS	0.75	CN-J76F						CN-412F
455	L/Y	AVSS	0.75	CN-J76F						CN-472M
455	L/Y	AVSS	0.75	CN-J76F						CN-764M
610	Gr/B	AVSS	0.75	CN-747F						CN-716M
611	B/Y	AVSS	0.75	CN-748F						CN-716M
612	W/L	AVSS	0.75	CN-749F						CN-716M
614	W/Y	AVSS	0.75	CN-764M						CN-J77F
614	W/Y	AVSS	0.75	CN-716M						CN-J77F
614	W/Y	AVSS	0.75	CN-474M						CN-J77F
809	G/W	AVSS	0.75	CN-772M						CN-765F
810	Br/G	AVSS	0.75	CN-766F						CN-772M
859	Gr	AVSS	0.75	CN-772M						CN-731F
862	G/O	AVSS	0.75	CN-J75F						CN-412F
862	G/O	AVSS	0.75	CN-J75F						CN-473M
862	G/O	AVSS	0.75	CN-J75F						CN-763F
864	L/G	AVSS	0.75	CN-730F						CN-772M
900	Lg/Y	AVSS	0.75	CN-745F						CN-472M
902	Gr/R	AVSS	0.75	CN-J77F						CN-750F
902	Gr/R	AVSS	0.75	CN-J77F						CN-413F
902	Gr/R	AVSS	0.75	CN-J77F						CN-772M
903	Lg	AVSS	0.75	CN-J77F						CN-750F
903	Lg	AVSS	0.75	CN-J77F						CN-413F
903	Lg	AVSS	0.75	CN-J77F						CN-772M
904	Y/G	AVSS	0.75	CN-763F						CN-473M
905	L/Y	AVSS	0.75	CN-473M						CN-763F
926	R	AVSS	0.75	CN-772M						CN-750F
927	O/W	AVSS	0.75	CN-772M						CN-750F
928	G/L	AVSS	0.75	CN-473M						CN-743F
928	G/L	AVSS	0.75	CN-473M						CN-744F
929	R/Y	AVSS	0.75	CN-472M						CN-746F
930	Gr/R	AVSS	0.75	CN-680F						CN-751F
931	Br/W	AVSS	0.75	CN-680F						CN-751F

WIRE NO.	WIRE COLOR	WIRE TYPE	SIZE	F R O M	※1	※2	CONNECTION	※2	※1	T O
946	O/L	AVSS	0.75	CN-413F						CN-683M
947	P/G	AVSS	0.75	CN-413F						CN-683M
950	G	AVSS	0.75	CN-764M						CN-473M
956	L/Y	AVSS	0.75	CN-869F						CN-716M
972	G/L	AVSS	0.75	CN-474M						CN-764M
973	O/L	AVSS	0.75	CN-474M						CN-764M
974	Gr/B	AVSS	0.75	CN-474M						CN-764M
988	G	AVSS	0.75	CN-751F						CN-J74F
988	G	AVSS	0.75	CN-413F						CN-J74F
988	G	AVSS	0.75	CN-680F						CN-J74F
989	Y/G	AVSS	0.75	CN-751F						CN-J74F
989	Y/G	AVSS	0.75	CN-413F						CN-J74F
989	Y/G	AVSS	0.75	CN-680F						CN-J74F
C02	Y	AVSS	0.75	CN-J75F						CN-412F
C02	Y	AVSS	0.75	CN-J75F						CN-473M
C02	Y	AVSS	0.75	CN-J75F						CN-764M
JP717	Y	AVSS	0.75	CN-783F						CN-783F
371	G	AVSS	0.75	CN-472M	0.75TW1				0.75TW1	CN-740F
380	W	AVSS	0.75	CN-472M	0.75TW1				0.75TW1	CN-740F
952	L/O	AVSS	0.75	CN-472M	0.75TW2				0.75TW2	CN-742F
953	G/B	AVSS	0.75	CN-472M	0.75TW2				0.75TW2	CN-742F
954	Br/Y	AVSS	0.75	CN-472M	0.75TW3				0.75TW3	CN-741F
955	G/L	AVSS	0.75	CN-472M	0.75TW3				0.75TW3	CN-741F
A41	W/B	AVSS	0.5	CN-474M	0.5TW1				0.5TW1	CN-628F
A42	W/L	AVSS	0.5	CN-474M	0.5TW1				0.5TW1	CN-628F
131	G	MVVS	0.75	CN-470F	4C2				4C2	CN-760F
132	B	MVVS	0.75	CN-470F	4C2				4C2	CN-760F
133	R	MVVS	0.75	CN-470F	4C2				4C2	CN-760F
137	W	MVVS	0.75	CN-470F	4C2				4C2	CN-760F
ES1	B/R	AVSS	0.75	CN-470F	4C2				4C2	(CN-760F)

Reference only

(5/5)

JUNCTION BOX

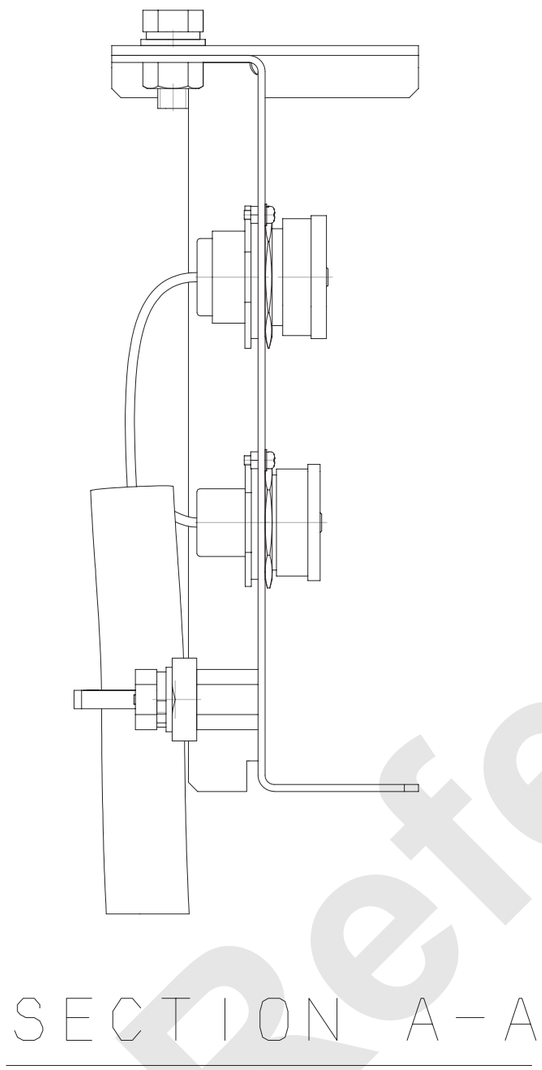

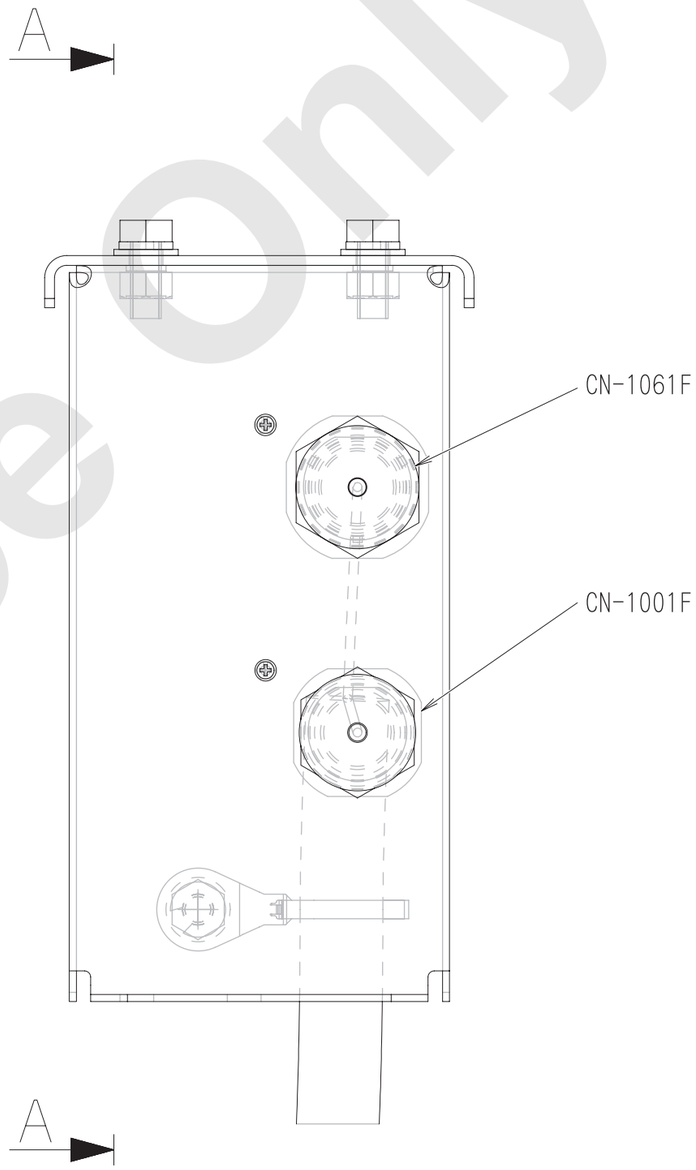

Reference Only

ATT. JUNCTION HARNESS

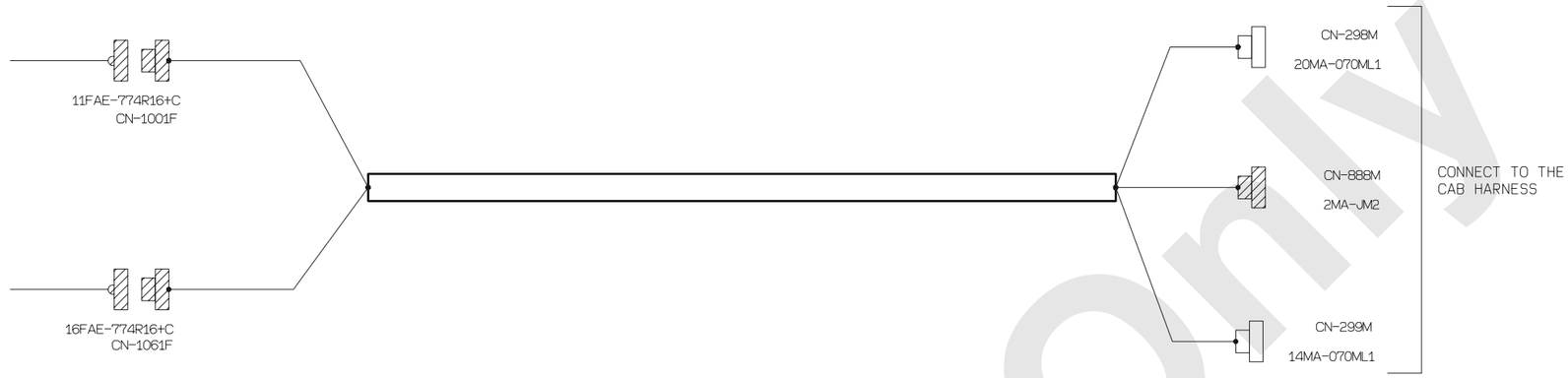

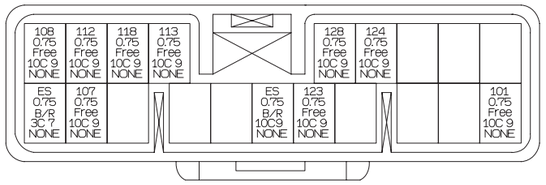

CN-298M
20MA-070ML1

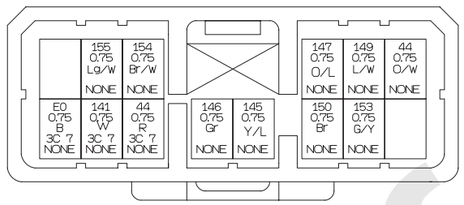

CN-299M
14MA-070ML1

CN-888M
2MA-JM2

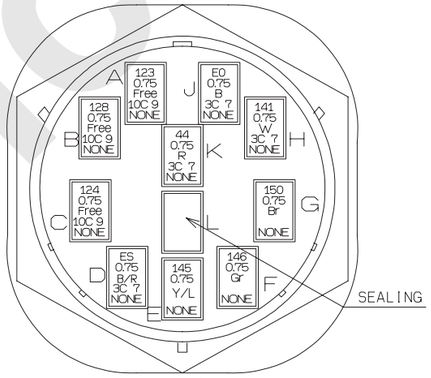

CN-1001F
11FAE-774R16+C

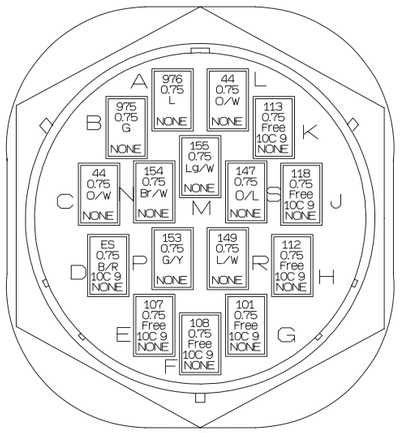

CN-1061F
16FAE-774R16+C

Reference Only

(1/2)

THE WIRE NO./COLOR LIST

※1 WIRE NO.
※2 WIRE COLOR
※3 WIRE TYPE
※4 SIZE
※5 PIN NUMBER
※6 IDENTIFICATION SYMBOL
※7 TWO WIRE CONNECT NUMBER
※8 CONNECTION

※1	※2	※3	※4	F R O M	※5	※6	※7	※8	※7	※6	※5	T O
44	O/W	AVSS	0.75	CN-299M	1							JS
44	O/W	AVSS	0.75	CN-1061F	11							JS
44	O/W	AVSS	0.75	CN-1061F	3							JS
145	Y/L	AVSS	0.75	CN-1001F	5						10	CN-299M
146	Gr	AVSS	0.75	CN-1001F	6						11	CN-299M
147	O/L	AVSS	0.75	CN-1061F	16						3	CN-299M
149	L/W	AVSS	0.75	CN-1061F	15						2	CN-299M
150	Br	AVSS	0.75	CN-1001F	7						9	CN-299M
153	G/Y	AVSS	0.75	CN-1061F	14						8	CN-299M
154	Br/W	AVSS	0.75	CN-1061F	13						4	CN-299M
155	Lg/W	AVSS	0.75	CN-1061F	12						5	CN-299M
975	G	AVSS	0.75	CN-1061F	2						1	CN-888M
976	L	AVSS	0.75	CN-1061F	1						2	CN-888M
44	R	MVVS	0.75	CN-1001F	10	3C7				3C7	12	CN-299M
141	W	MVVS	0.75	CN-1001F	8	3C7				3C7	13	CN-299M
E0	B	MVVS	0.75	CN-1001F	9	3C7				3C7	14	CN-299M
ES	B/R	AVSS	0.75	(CN-1001F)		3C7				3C7	20	CN-298M
ES	B/R	AVSS	0.75	CN-1001F	4	3C7				3C7		(CN-299M)
101	Free	MVVS	0.75	CN-1061F	7	10C9				10C9	10	CN-298M
107	Free	MVVS	0.75	CN-1061F	5	10C9				10C9	19	CN-298M
108	Free	MVVS	0.75	CN-1061F	6	10C9				10C9	9	CN-298M
112	Free	MVVS	0.75	CN-1061F	8	10C9				10C9	8	CN-298M
113	Free	MVVS	0.75	CN-1061F	10	10C9				10C9	6	CN-298M
118	Free	MVVS	0.75	CN-1061F	9	10C9				10C9	7	CN-298M
123	Free	MVVS	0.75	CN-1001F	1	10C9				10C9	14	CN-298M
124	Free	MVVS	0.75	CN-1001F	3	10C9				10C9	4	CN-298M
128	Free	MVVS	0.75	CN-1001F	2	10C9				10C9	5	CN-298M
ES	B/R	AVSS	0.75	(CN-1061F)		10C9				10C9	15	CN-298M
ES	B/R	AVSS	0.75	CN-1061F	4	10C9				10C9		(CN-298M)

Reference Only

(2/2)

9. ENGINE

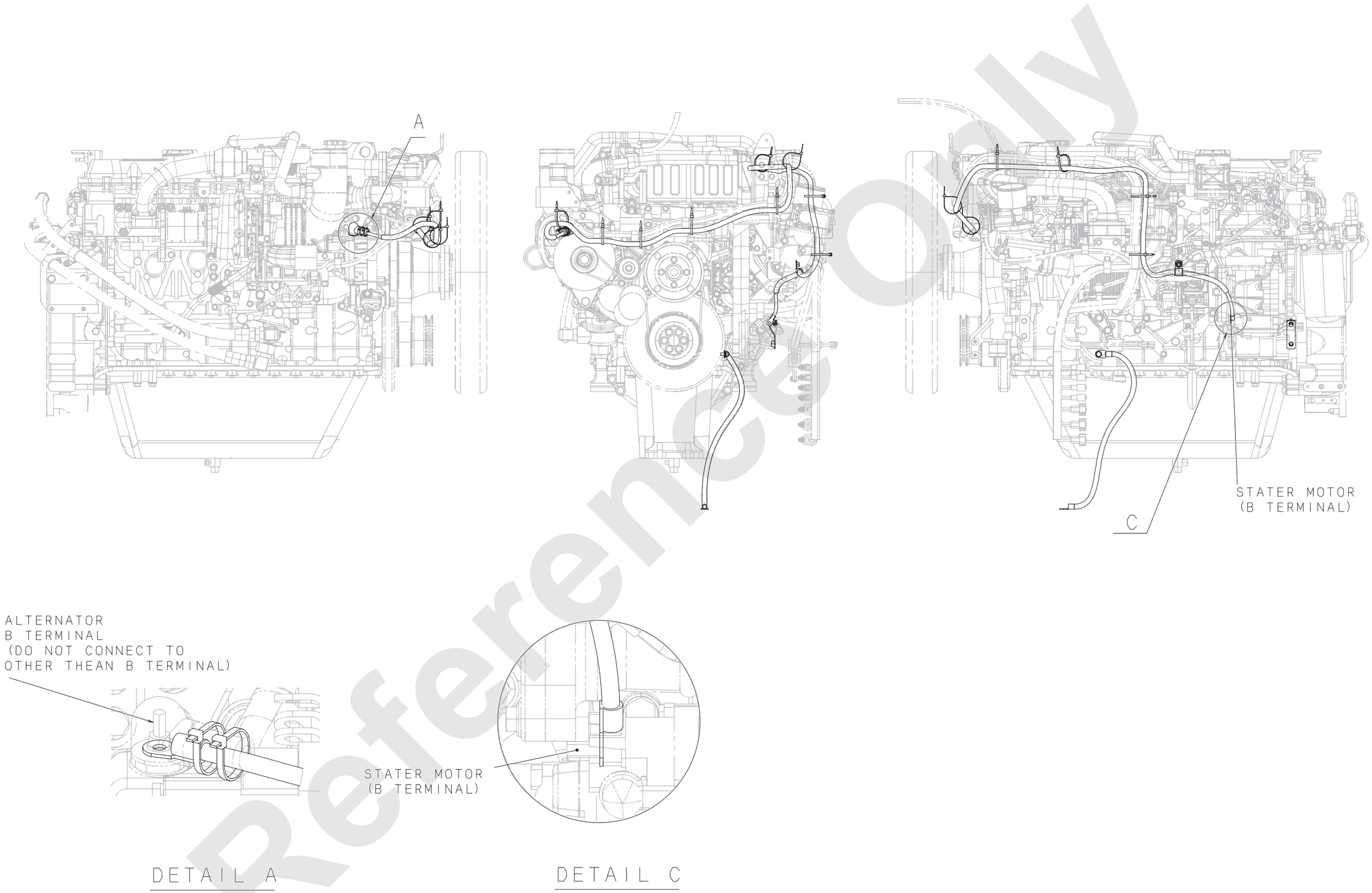

Reference Only

STARTER MOTOR TO ENGINE GROUND

WIRE No. AND WIRE COLER LIST

WIRE No.	COLER	TYPE	SIZE	F R O M	DISTINGUISH SYMBOL	2-WIRE CLAMP No.	CONNECTION	2-WIRE CLAMP No.	DISTINGUISH SYMBOL	TO
EG1	B	AV	60	LA-C11			————			LA-C5

STARTER MOTOR TERMINAL B ALTERNATOR B TERMINAL

WIRE No. AND WIRE COLER LIST

WIRE No.	COLER	TYPE	SIZE	F R O M	DISTINGUISH SYMBOL	2-WIRE CLAMP No.	CONNECTION	2-WIRE CLAMP No.	DISTINGUISH SYMBOL	TO
2M	W	AV	20	LA-C3			————			LA-C10

Reference Only

10. MONITOR

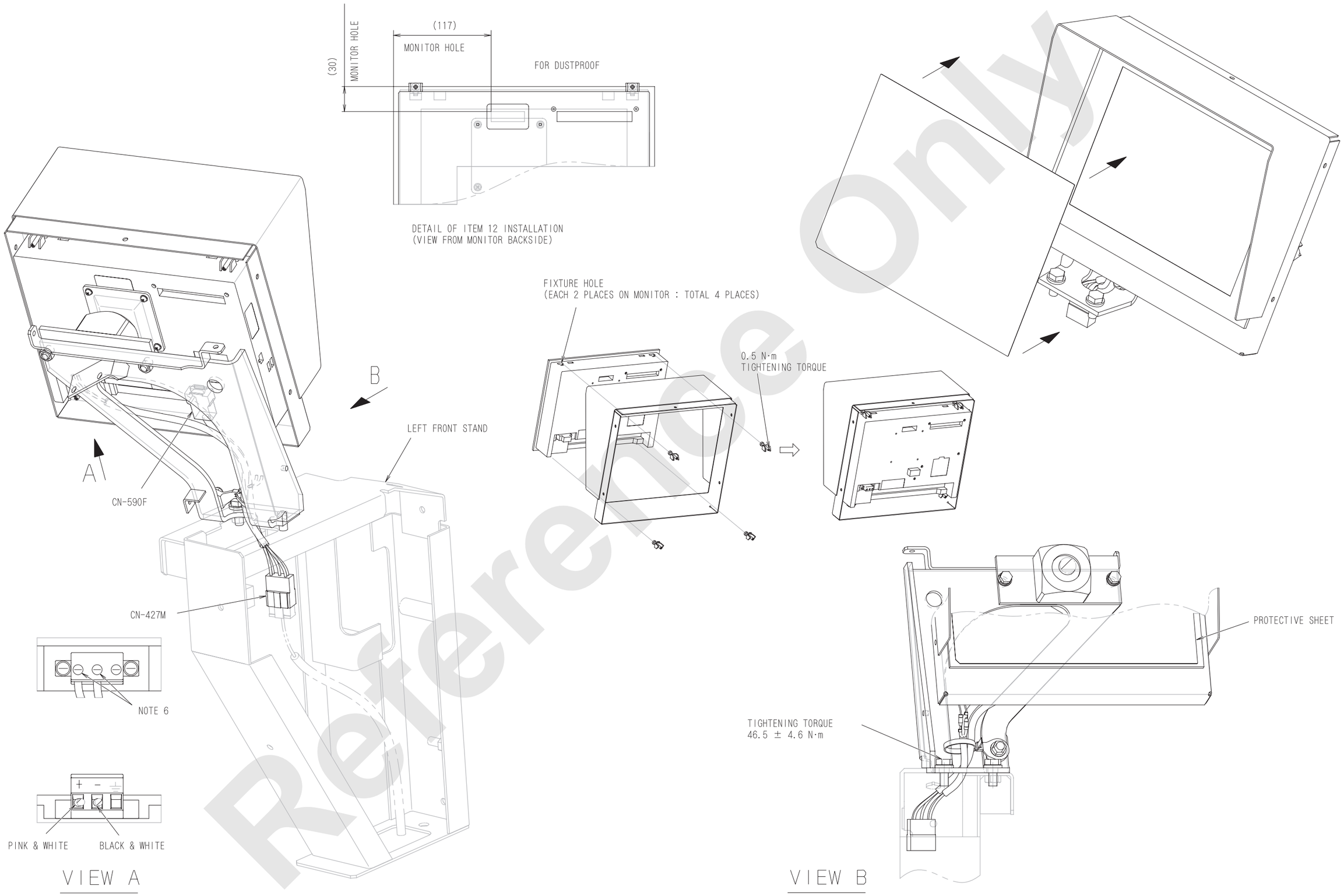

Reference Only

MONITOR HARNESS

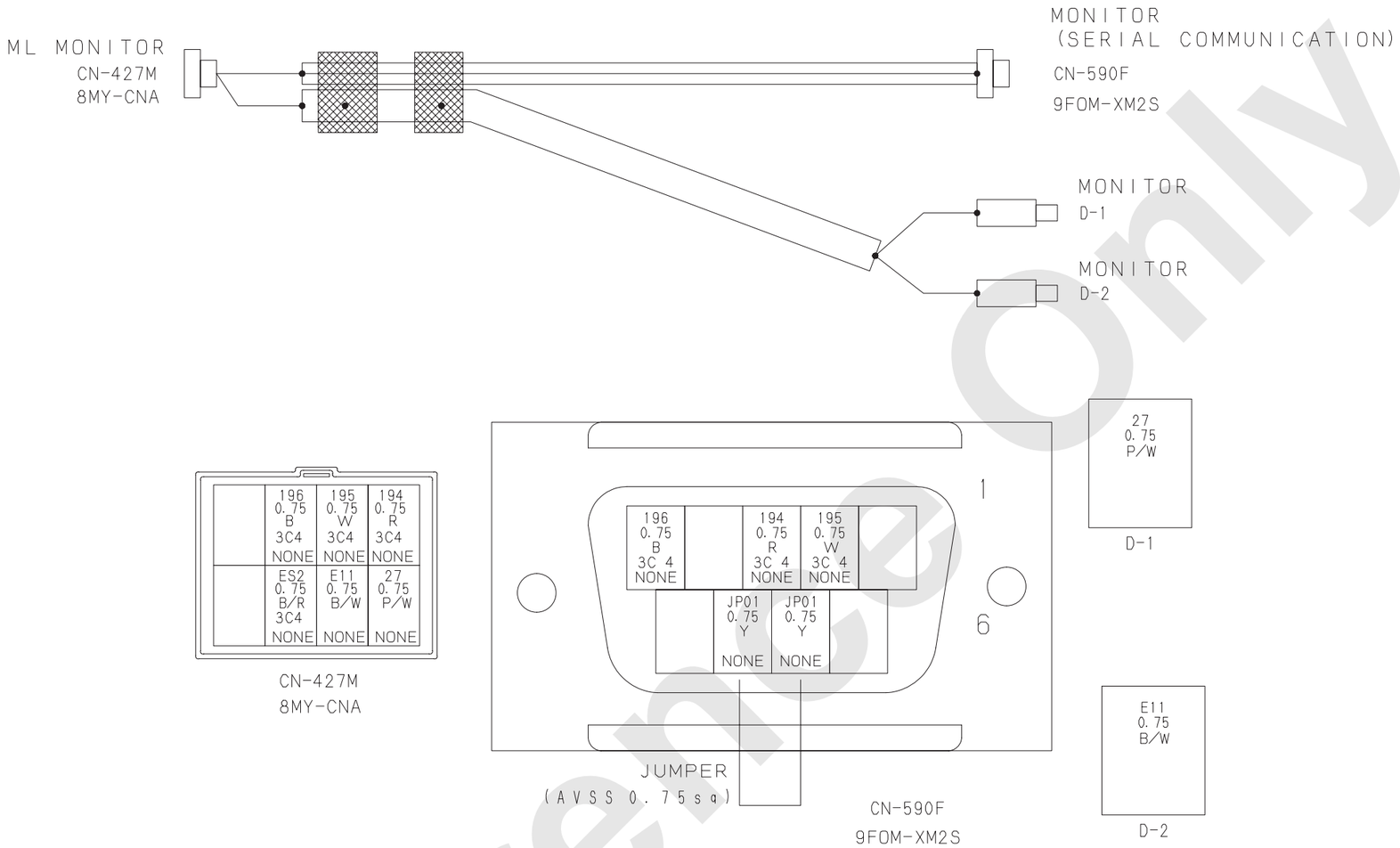

WIRE No. AND WIRE COLOR LIST

WIRE No.	COLOR	TYPE	SIZE	FROM	PIN No.	DISTINGUISH SYMBOL	2-WIRE CLAMP	CONNECTION	2-WIRE CLAMP	DISTINGUISH SYMBOL	PIN No.	TO
27	P/W	AVSS	0.75	CN-427M	5						1	D-1
JP01	Y	AVSS	0.75	CN-590F	7						8	CN-590F
194	R	MVVS	0.75	CN-427M	1	3C4				3C4	3	CN-590F
195	W	MVVS	0.75	CN-427M	2	3C4				3C4	2	CN-590F
196	B	MVVS	0.75	CN-427M	3	3C4				3C4	5	CN-590F
ES2	B/R	AVSS	0.75	CN-427M	7	3C4				3C4		(CN-590F)
E11	B/W	AVSS	0.75	CN-427M	6						1	D-2

Reference Only

11. COUNTERWEIGHT SELF REMOVAL

- **10000A-1**

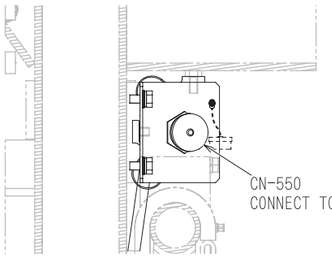

SECTION B-B

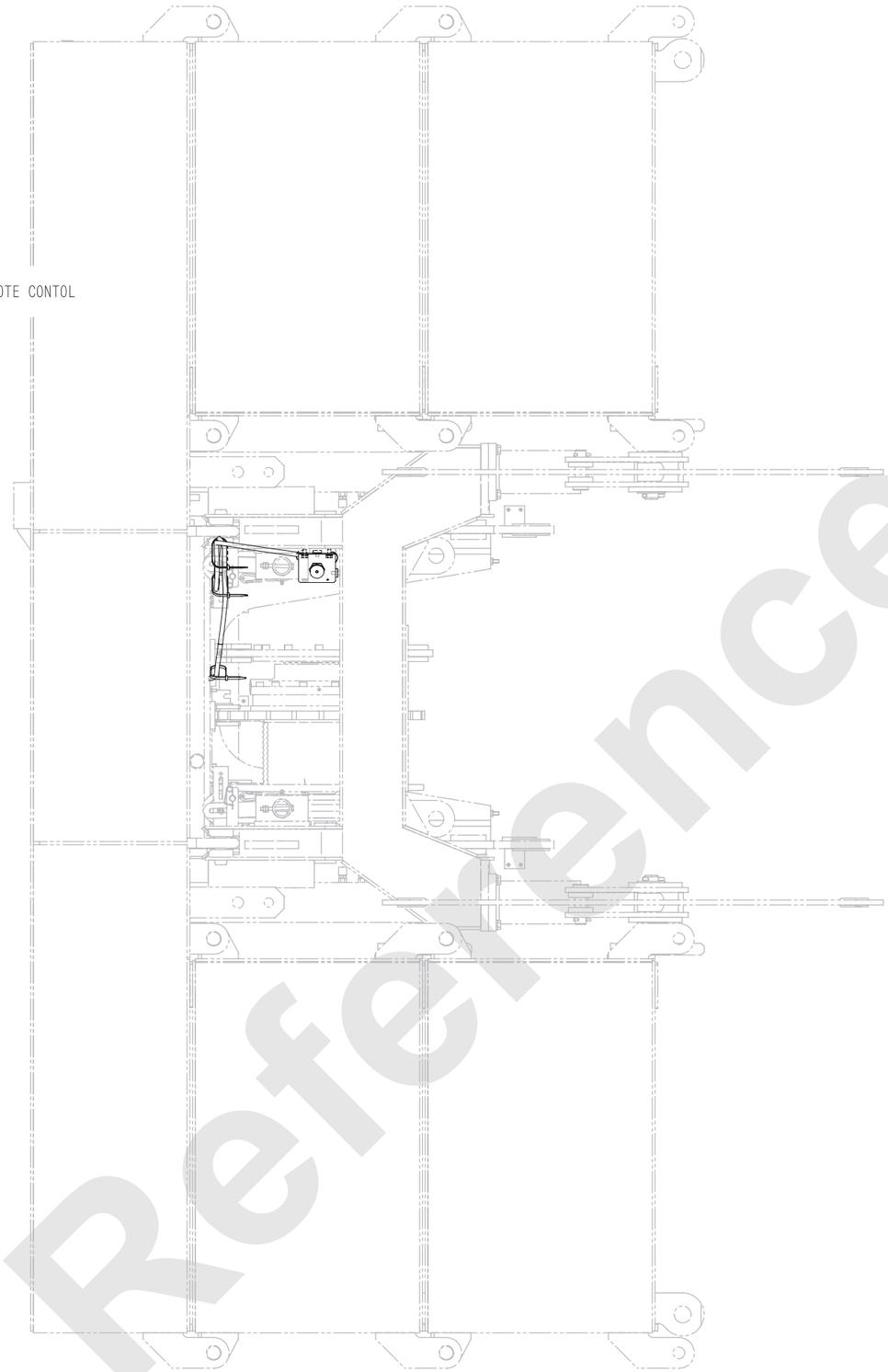

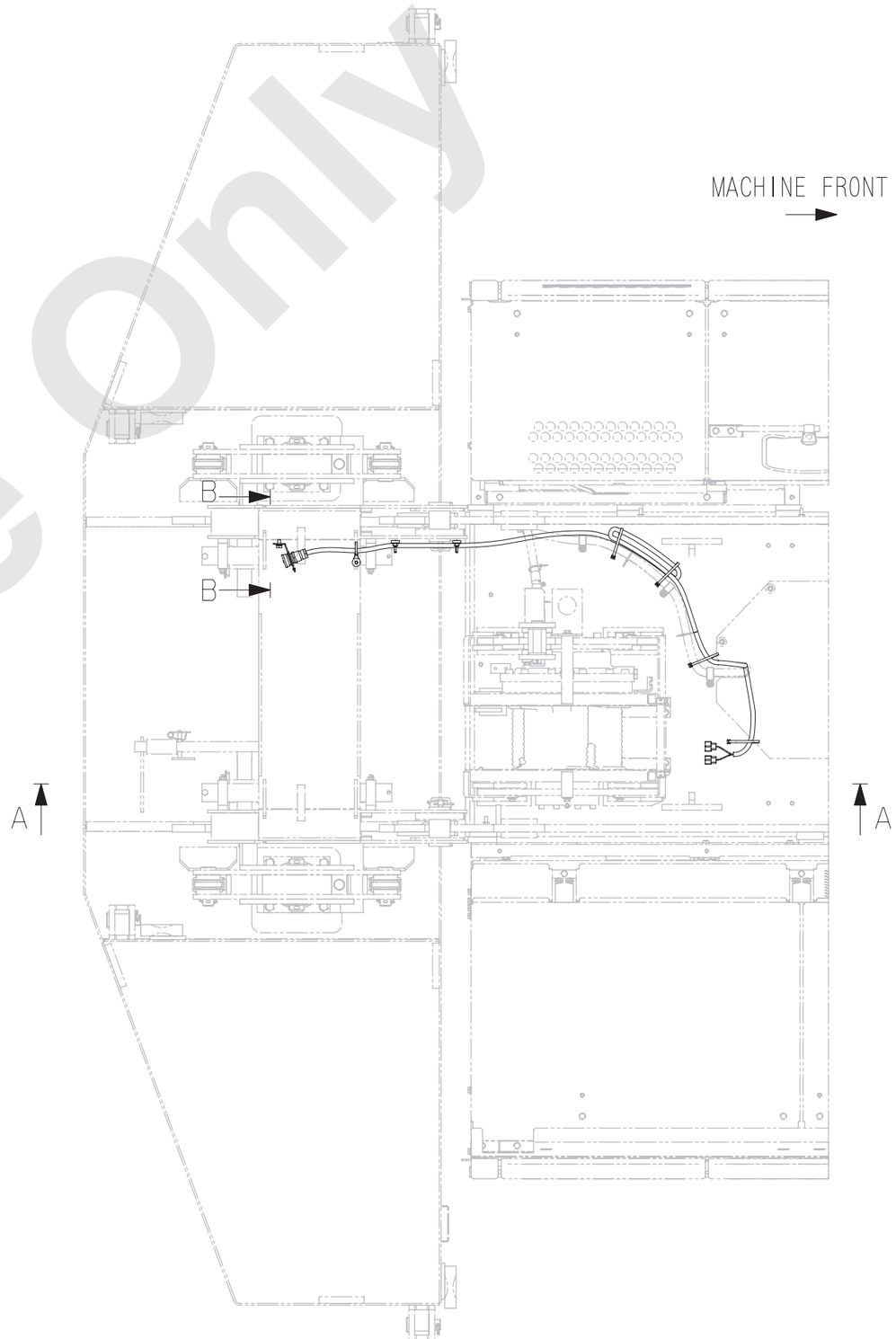

Reference Only

(1/2)

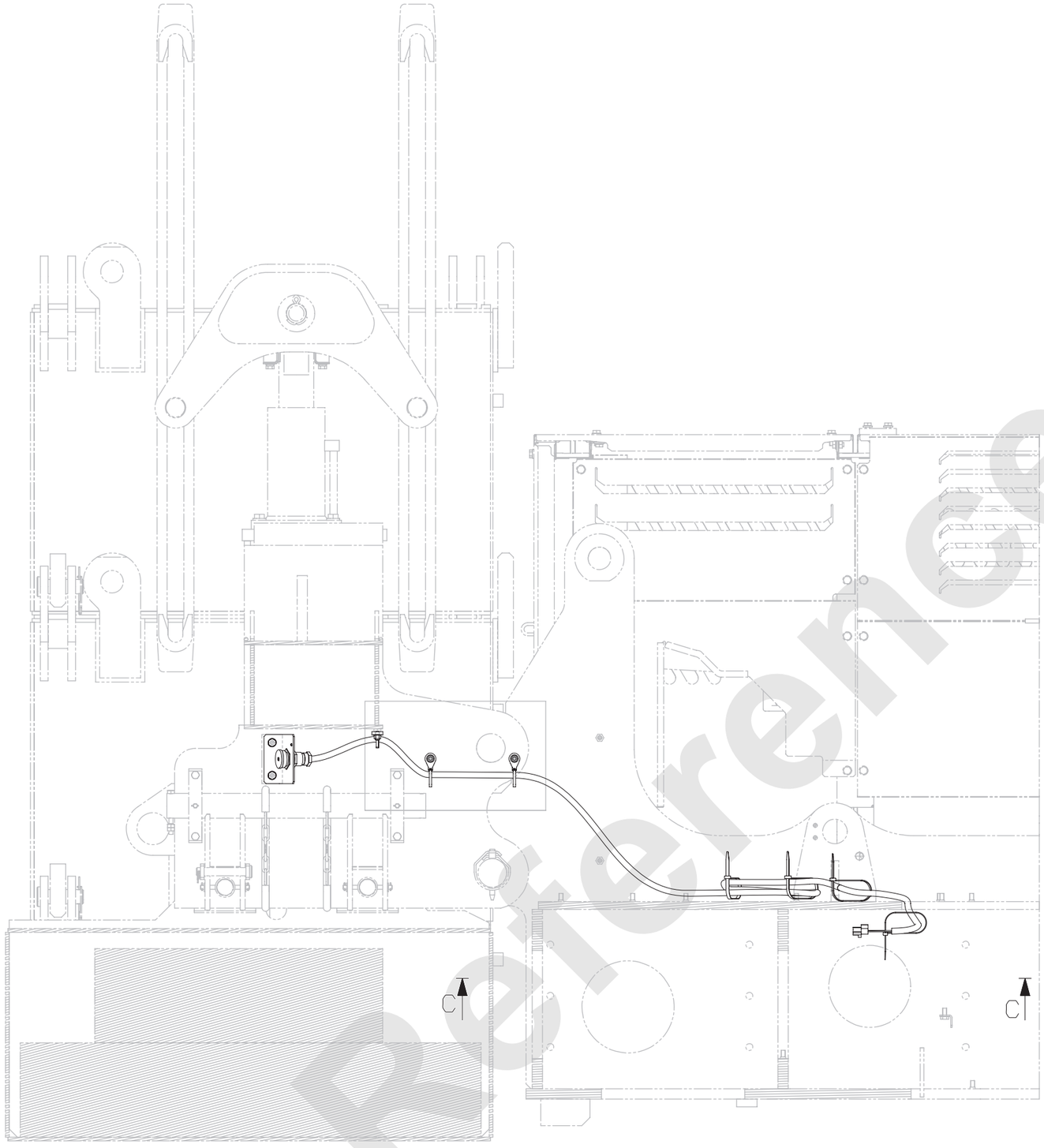

SECTION A-A

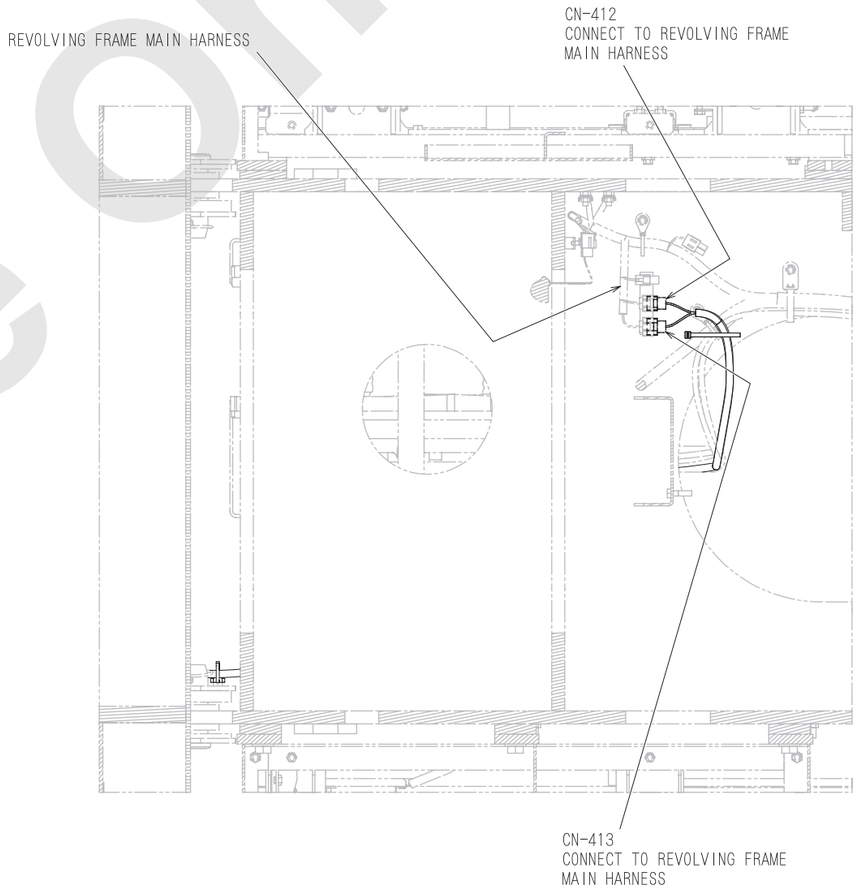

SECTION C-C

Reference Only

(2/2)

COUNTERWEIGHT SELF REMOVAL HARNESS

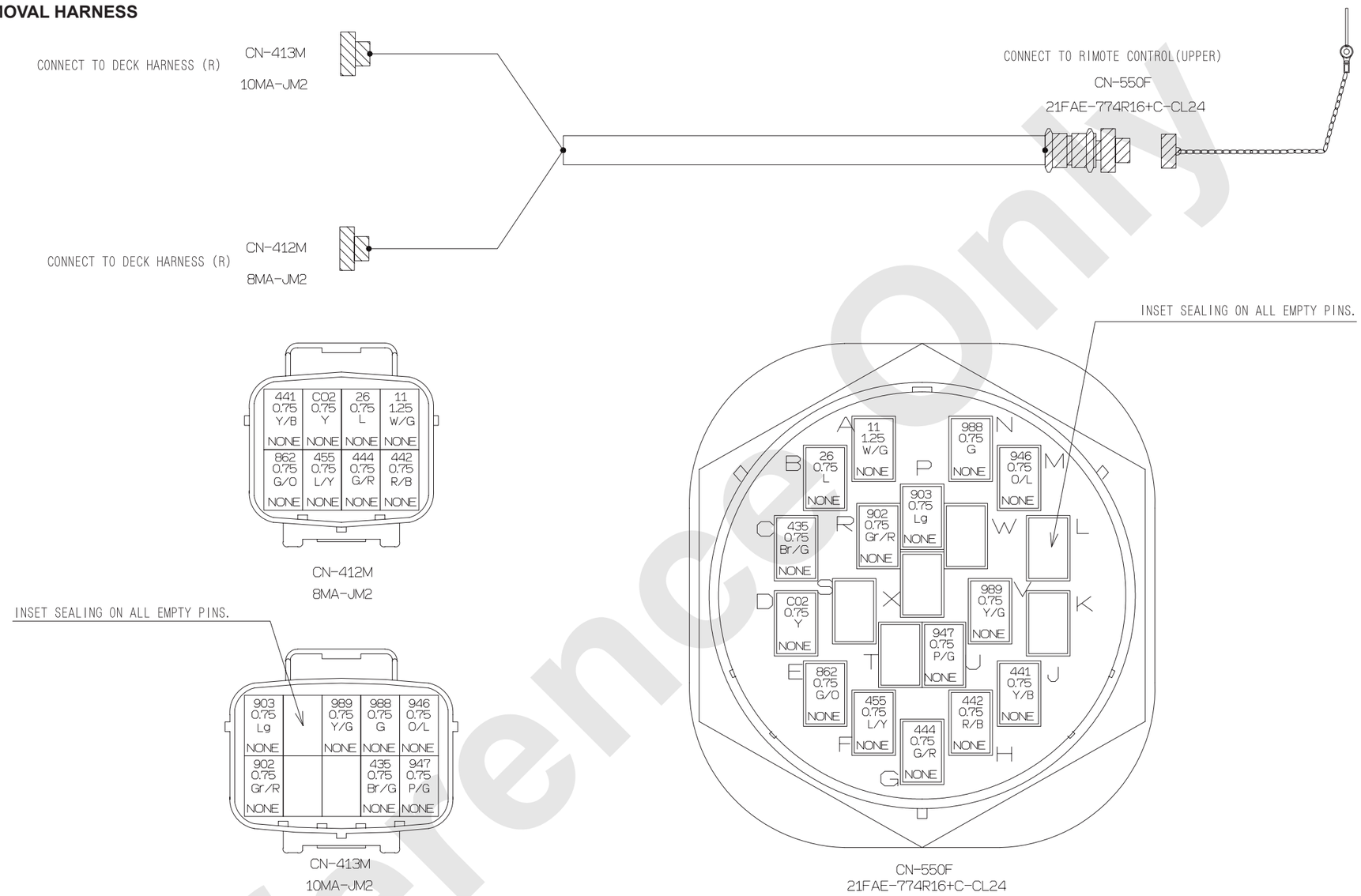

THE WIRE NO. /COLOR LIST

WIRE NO.	WIRE COLOR	WIRE TYPE	SIZE	F R O M	※1	CONNECTION	※1	T O
11	Free	2PNCT-SR	1.25	CN-412M		————		CN-550F
26	Free	2PNCT-SR	0.75	CN-412M		————		CN-550F
435	Free	2PNCT-SR	0.75	CN-413M		————		CN-550F
441	Free	2PNCT-SR	0.75	CN-412M		————		CN-550F
442	Free	2PNCT-SR	0.75	CN-412M		————		CN-550F
444	Free	2PNCT-SR	0.75	CN-412M		————		CN-550F
455	Free	2PNCT-SR	0.75	CN-412M		————		CN-550F
862	Free	2PNCT-SR	0.75	CN-412M		————		CN-550F
902	Free	2PNCT-SR	0.75	CN-413M		————		CN-550F
903	Free	2PNCT-SR	0.75	CN-413M		————		CN-550F
946	Free	2PNCT-SR	0.75	CN-413M		————		CN-550F
947	Free	2PNCT-SR	0.75	CN-413M		————		CN-550F
988	Free	2PNCT-SR	0.75	CN-413M		————		CN-550F
989	Free	2PNCT-SR	0.75	CN-413M		————		CN-550F
CO2	Free	2PNCT-SR	0.75	CN-412M		————		CN-550F

※1 TWO WIRE CONNECT NUMBER

Reference Only

12. COUNTERWEIGHT DETECTOR / 3-C/W / OPT.

- **GH**

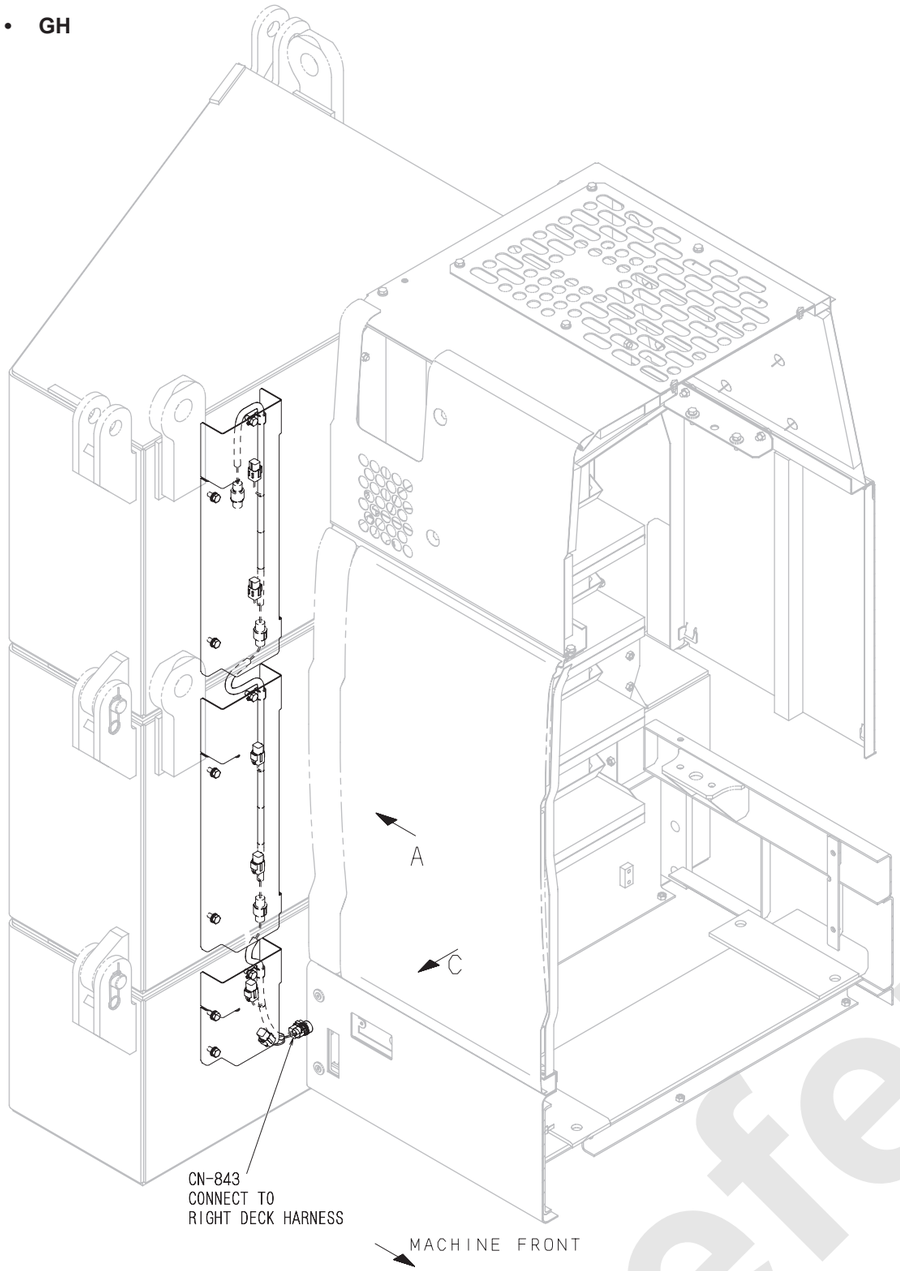

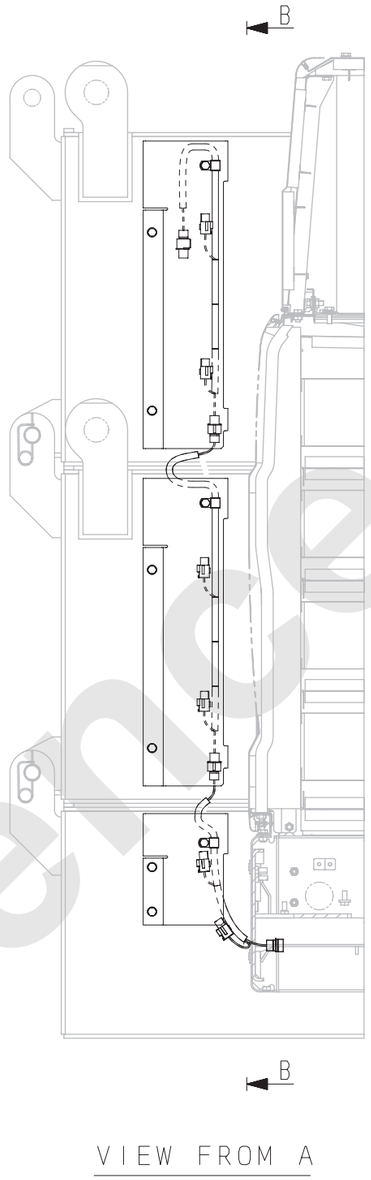

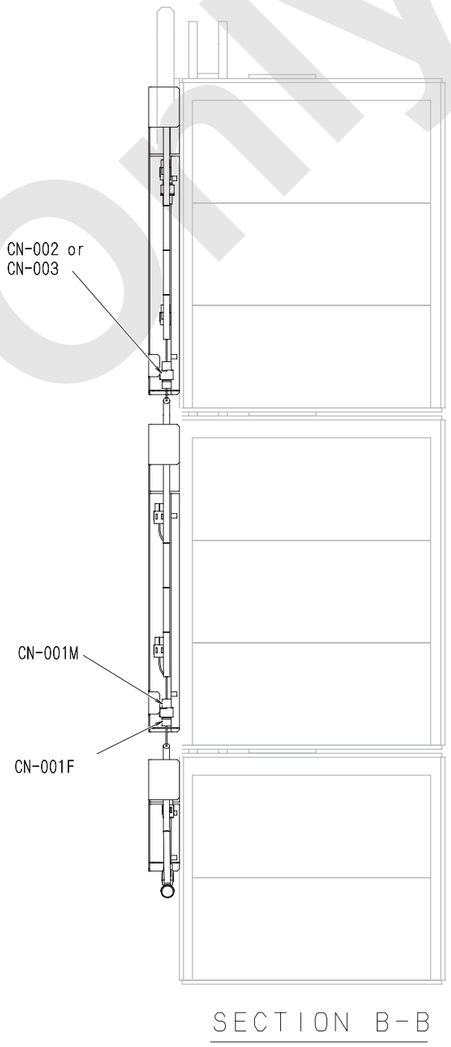

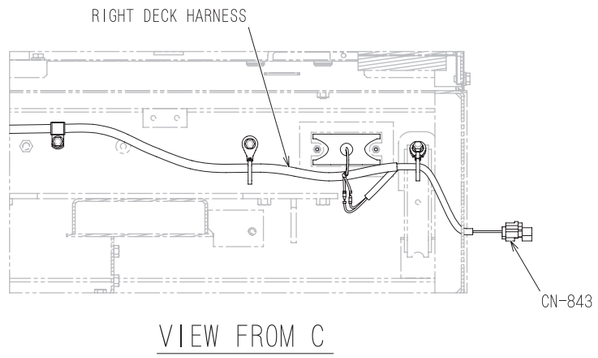

(1/2)

Reference Only

- **GG**

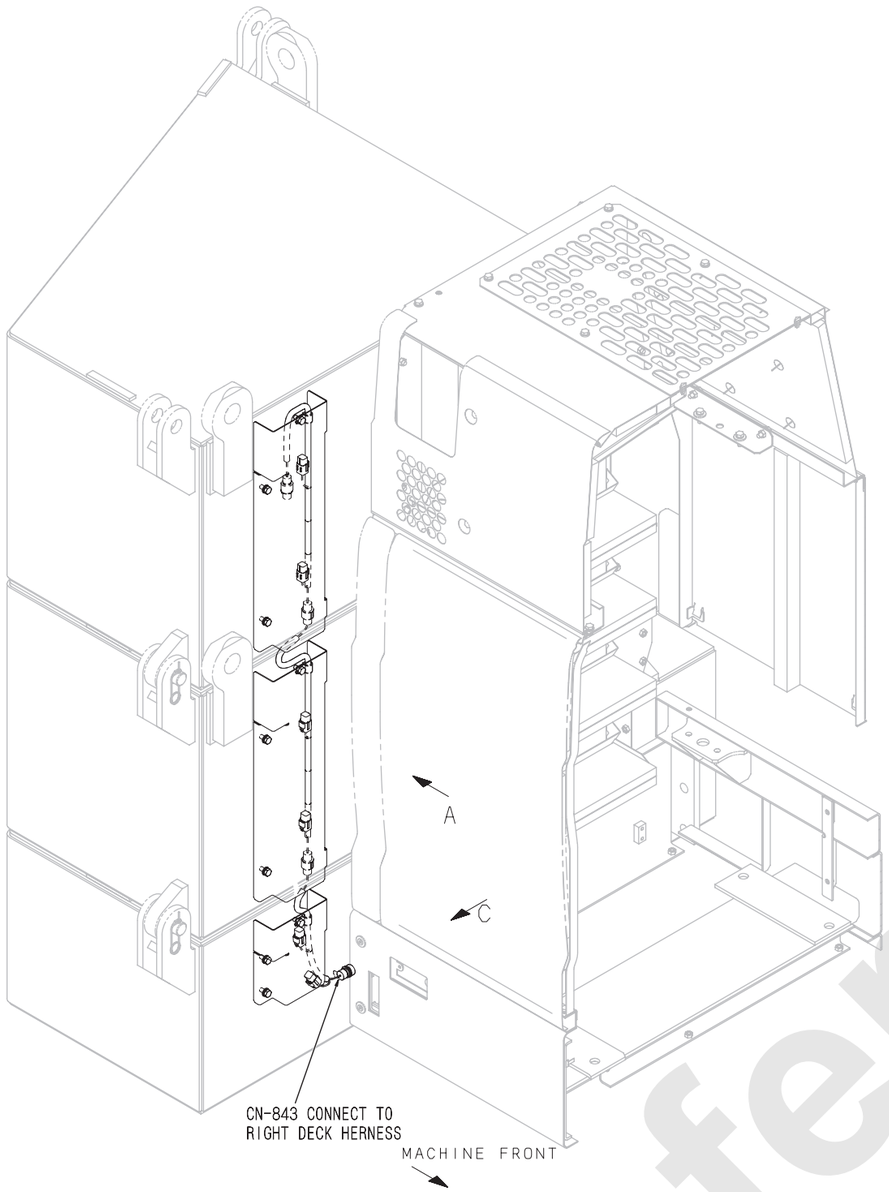

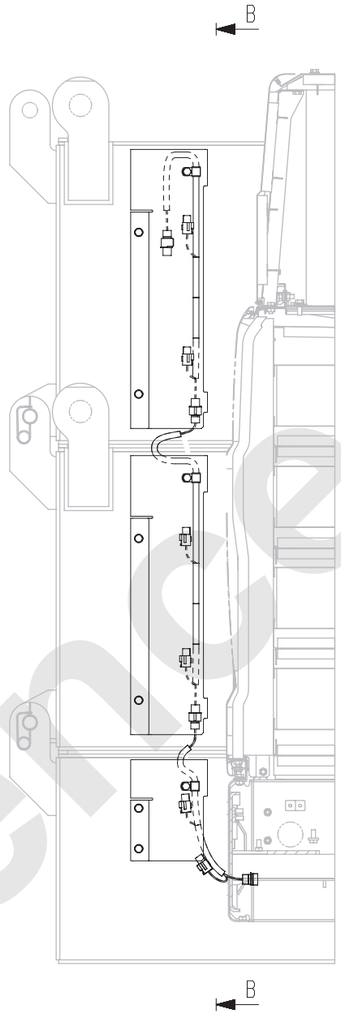

VIEW FROM A

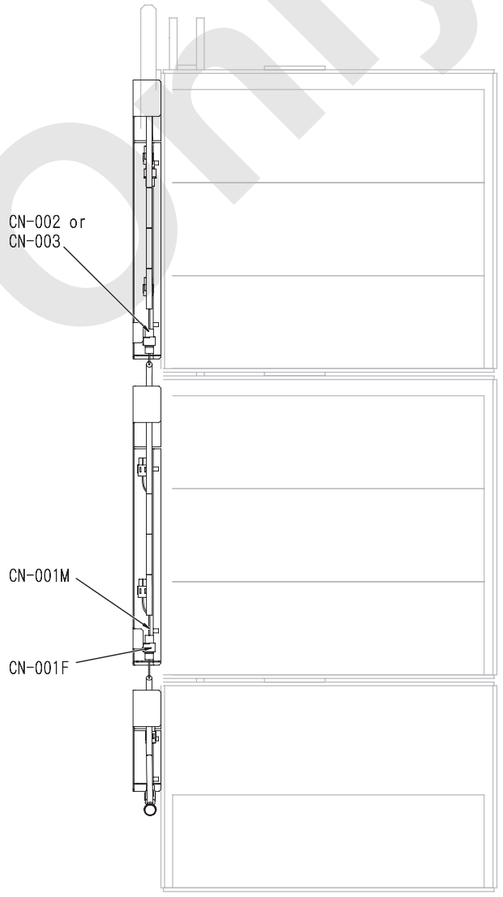

SECTION B-B

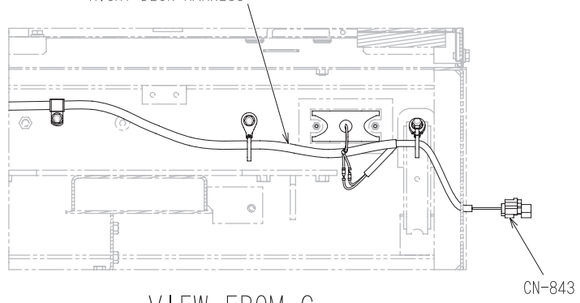

VIEW FROM C

(2/2)

Reference Only

COUNTERWEIGHT DETECTOR HARNESS (a)

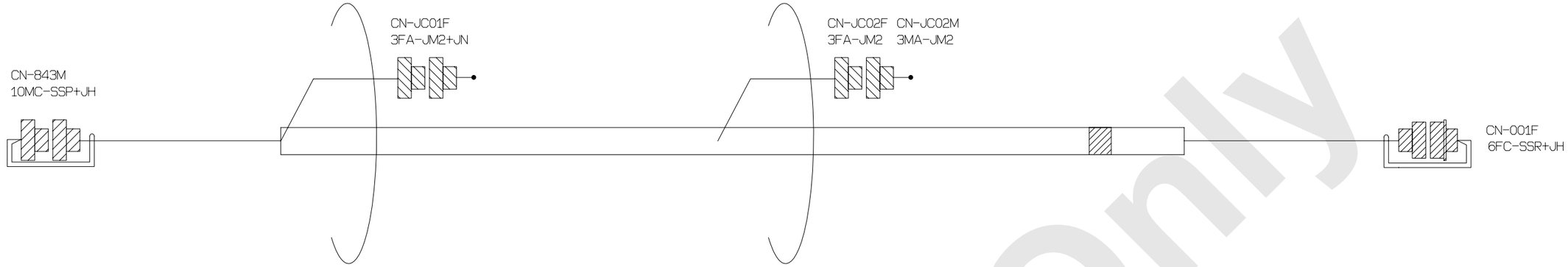

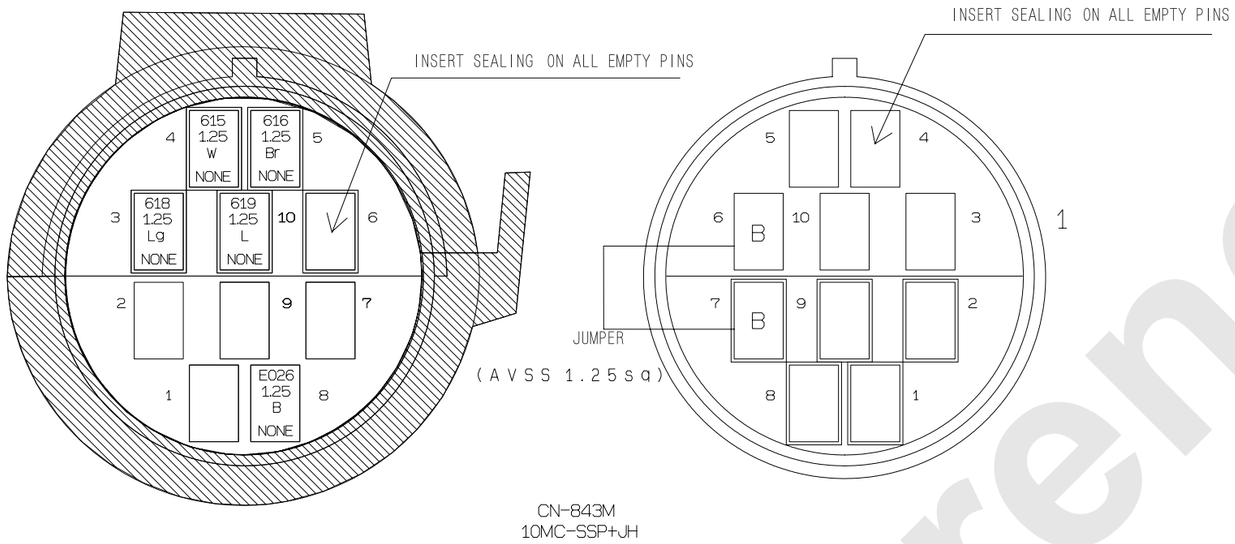

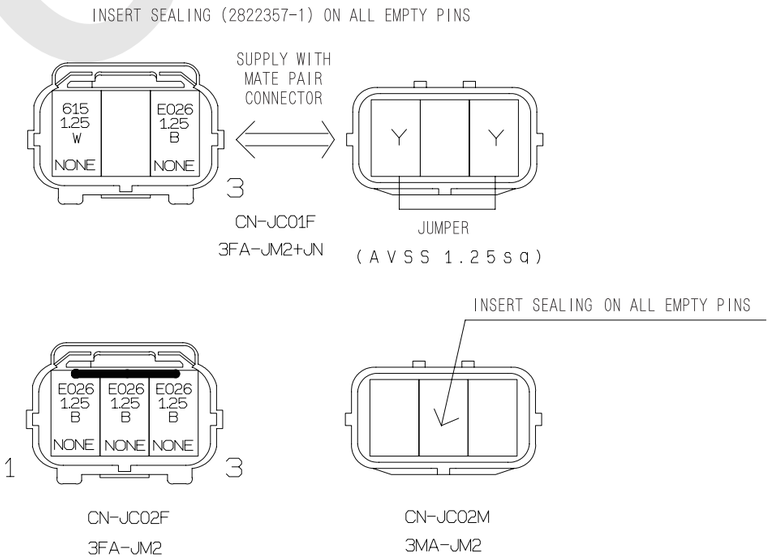

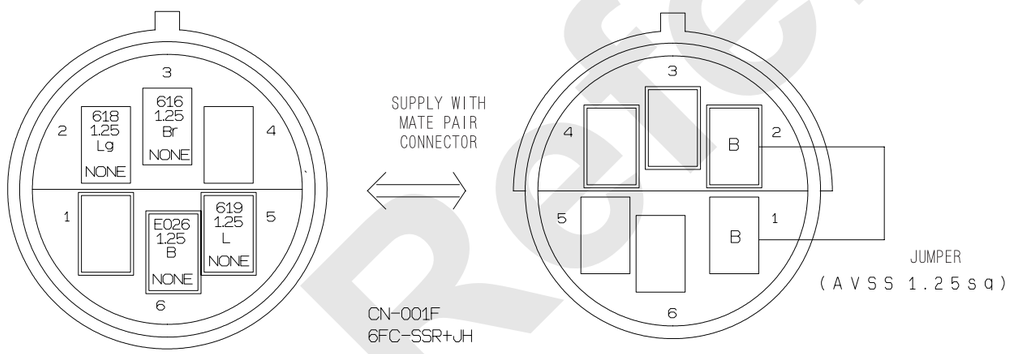

THE WIRE NO. /COLOR LIST

WIRE NO.	WIRE COLOR	WIRE TYPE	SIZE	FROM	※1	※2	CONNECTION	※2	※1	TO
615	W	AVSS	1.25	CN-843M						CN-JC01F
616	Br	AVSS	1.25	CN-843M						CN-001F
618	Lg	AVSS	1.25	CN-843M						CN-001F
619	L	AVSS	1.25	CN-843M						CN-001F
E026	B	AVSS	1.25	CN-843M						CN-JC02F
E026	B	AVSS	1.25	CN-JC01F						CN-JC02F
E026	B	AVSS	1.25	CN-001F						CN-JC02F

※1 IDENTIFICATION SYMBOL
※2 TWO WIRE CONNECT NUMBER

Reference Only

COUNTERWEIGHT DETECTOR HARNESS (b)

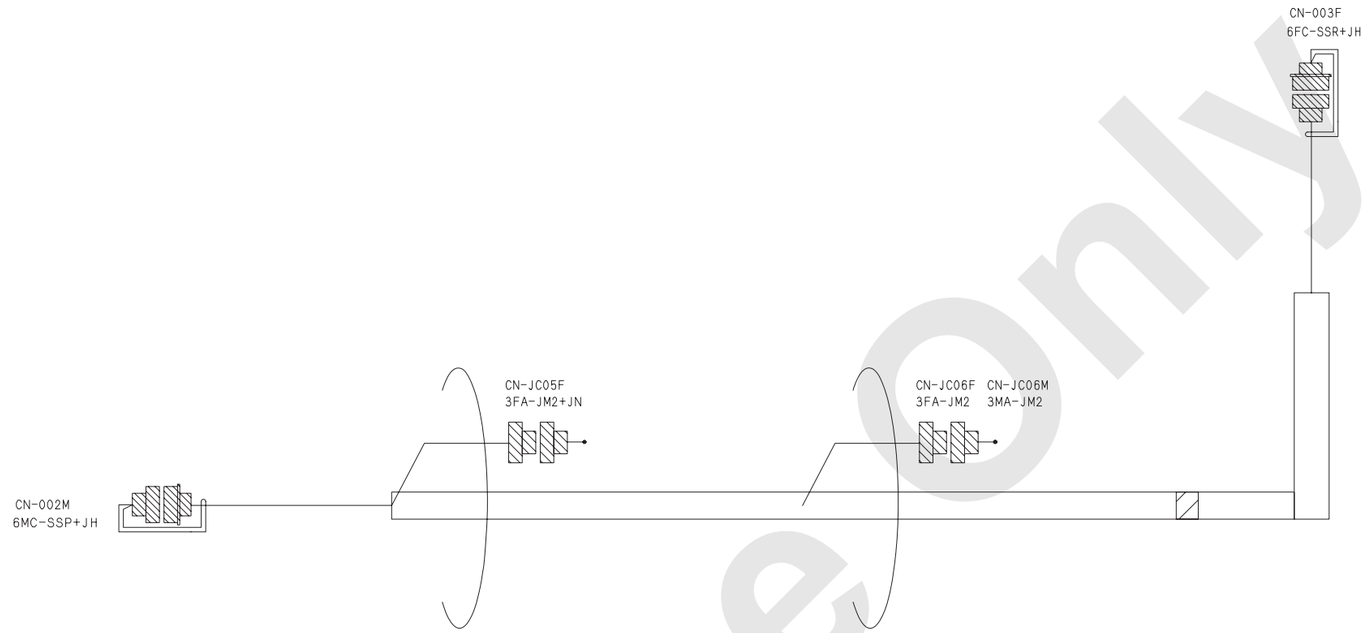

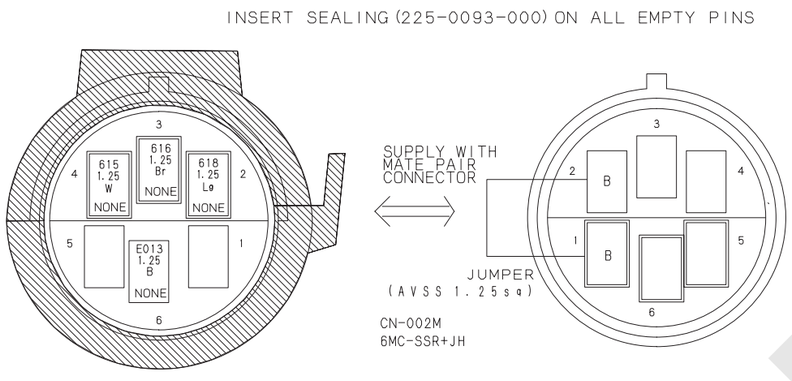

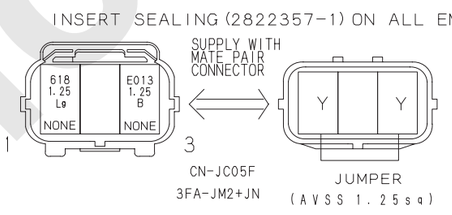

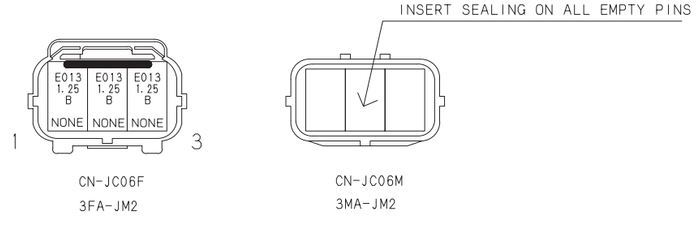

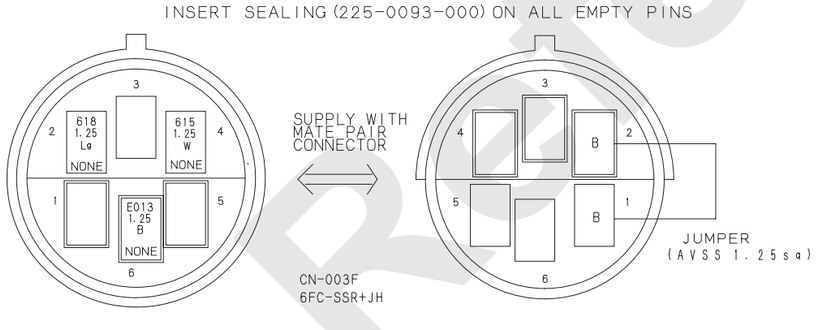

THE WIRE NO. /COLOR LIST

WIRE NO.	WIRE COLOR	WIRE TYPE	SIZE	F R O M	※1	※2	接　　続	※2	※1	T　　O
615	W	AEX	1.25	CN-002M						CN-003F
616	Br	AEX	1.25	CN-002M						CN-003F
618	Lg	AEX	1.25	CN-002M						CN-JC05F
E013	B	AEX	1.25	CN-002M						CN-JC06F
E013	B	AEX	1.25	CN-JC05F						CN-JC06F
E013	B	AEX	1.25	CN-003F						CN-JC06F

※1 IDENTIFICATION SYMBOL
※2 TWO WIRE CONNECT NUMBER

Reference Only

COUNTERWEIGHT DETECTOR HARNESS (c)

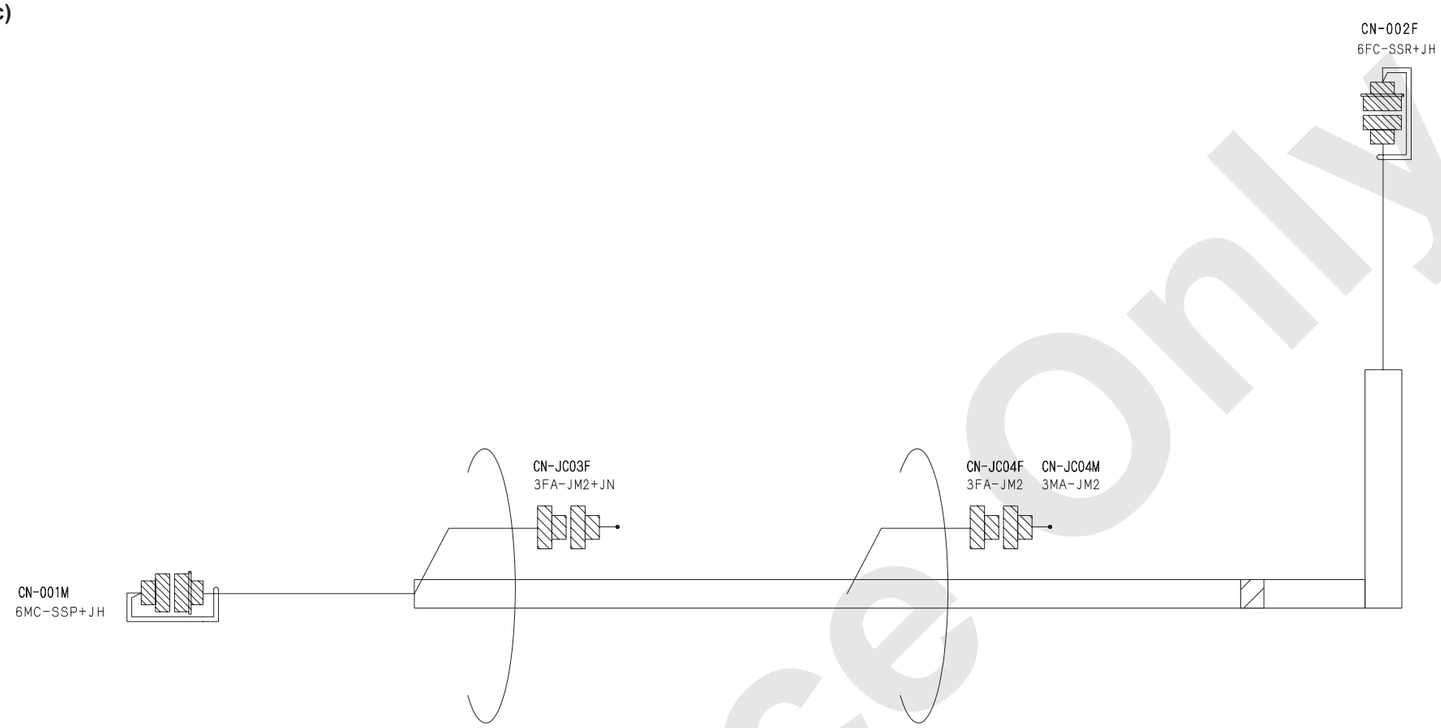

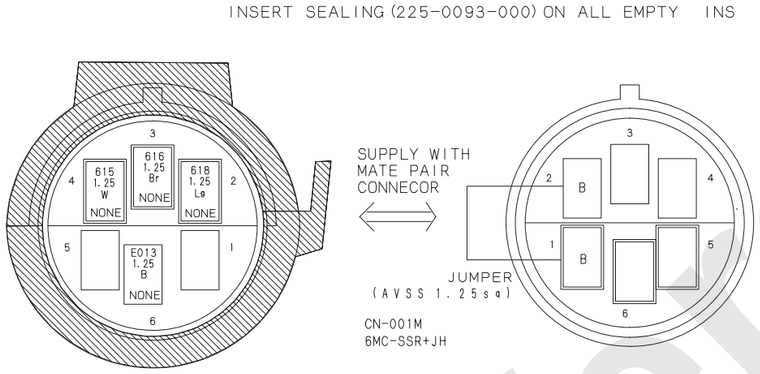

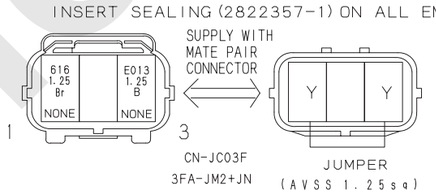

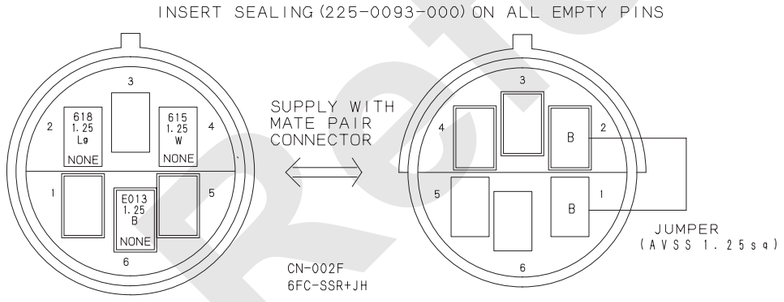

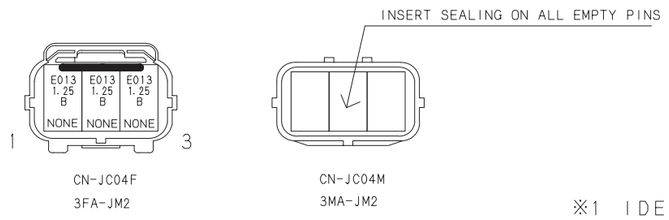

※1 IDENTIFICATION SYMBOL
※2 TWO WIRE CONNECT NUMBER

THE WIRE NO. /COLOR LIST

WIRE NO.	WIRE COLOR	WIRE TYPE	SIZE	FROM	※1	※2	CONNECTION	※2	※1	TO
615	W	AEX	1.25	CN-001M						CN-002F
616	Br	AEX	1.25	CN-001M						CN-JC03F
618	Lg	AEX	1.25	CN-001M						CN-002F
E013	B	AEX	1.25	CN-001M						CN-JC04F
E013	B	AEX	1.25	CN-JC03F						CN-JC04F
E013	B	AEX	1.25	CN-002F						CN-JC04F

Reference only

13. COUNTERWEIGHT DETECTOR / 4-C/W / OPT.

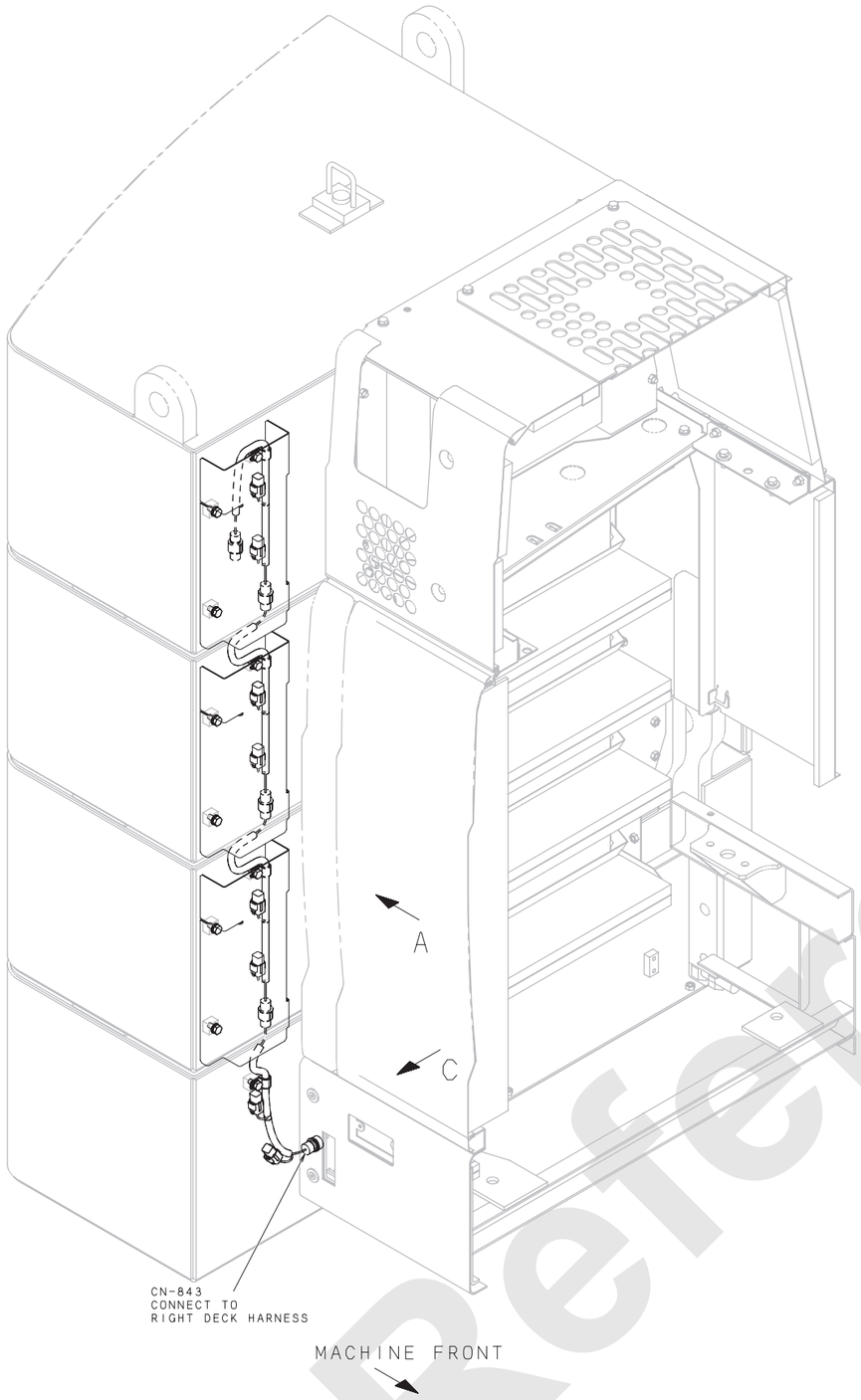

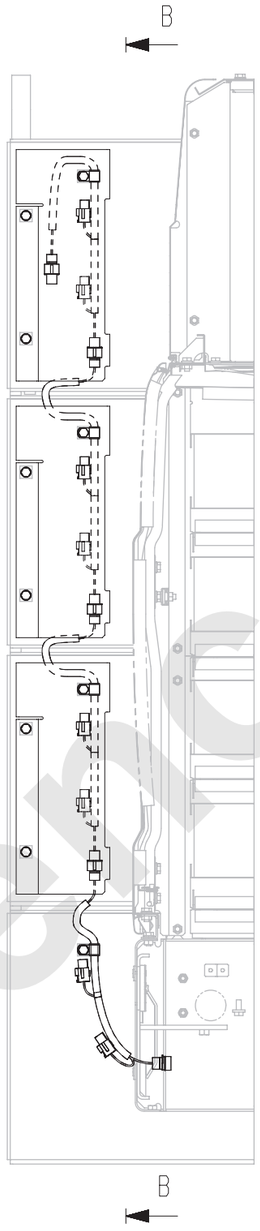

VIEW FROM A

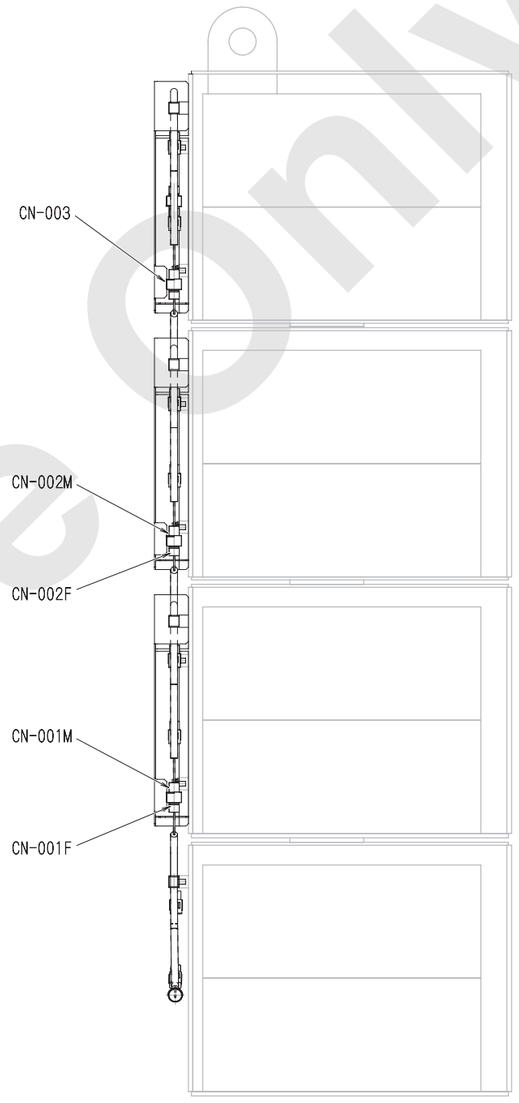

SECTION B-B

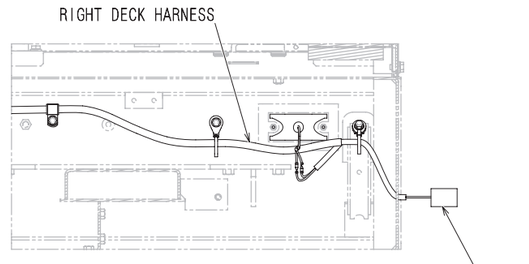

VIEW FROM A

Reference Only

COUNTERWEIGHT DETECTOR HARNESS (a)

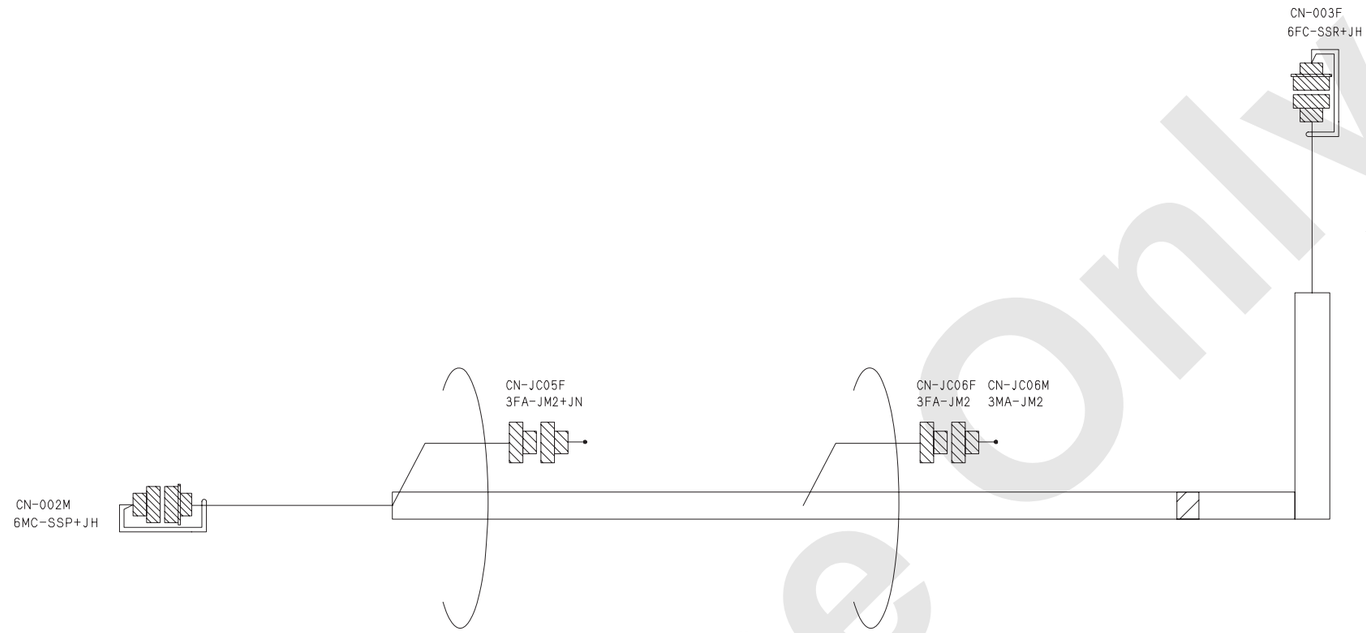

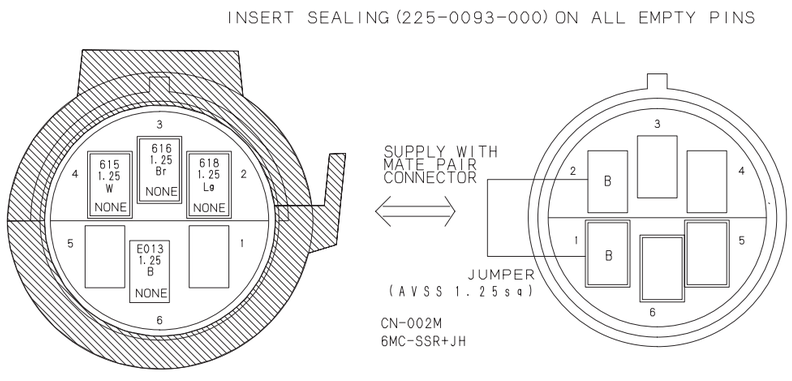

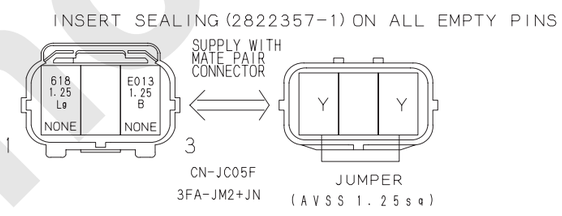

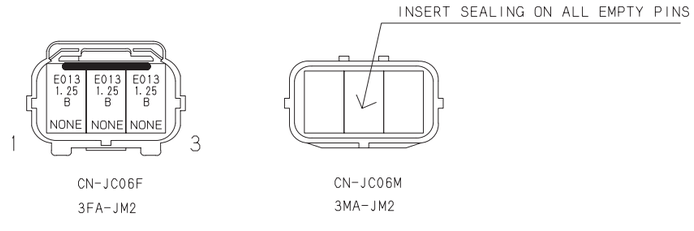

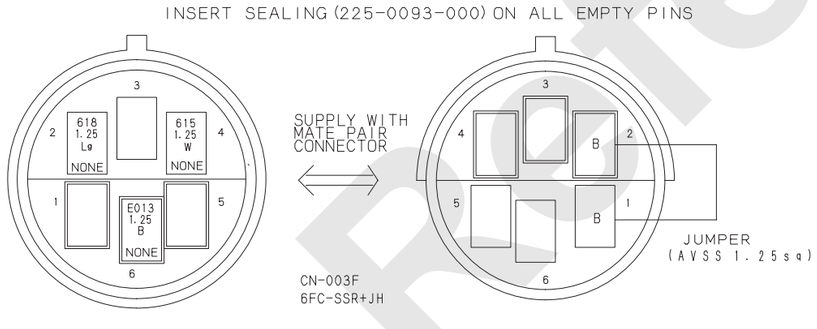

THE WIRE NO. /COLOR LIST

WIRE NO.	WIRE COLOR	WIRE TYPE	SIZE	FROM	※1	※2	接続	※2	※1	TO
615	W	AEX	1.25	CN-002M						CN-003F
616	Br	AEX	1.25	CN-002M						CN-003F
618	Lg	AEX	1.25	CN-002M						CN-JC05F
E013	B	AEX	1.25	CN-002M						CN-JC06F
E013	B	AEX	1.25	CN-JC05F						CN-JC06F
E013	B	AEX	1.25	CN-003F						CN-JC06F

※1 IDENTIFICATION SYMBOL

※2 TWO WIRE CONNECT NUMBER

Reference Only

COUNTERWEIGHT DETECTOR HARNESS (b)

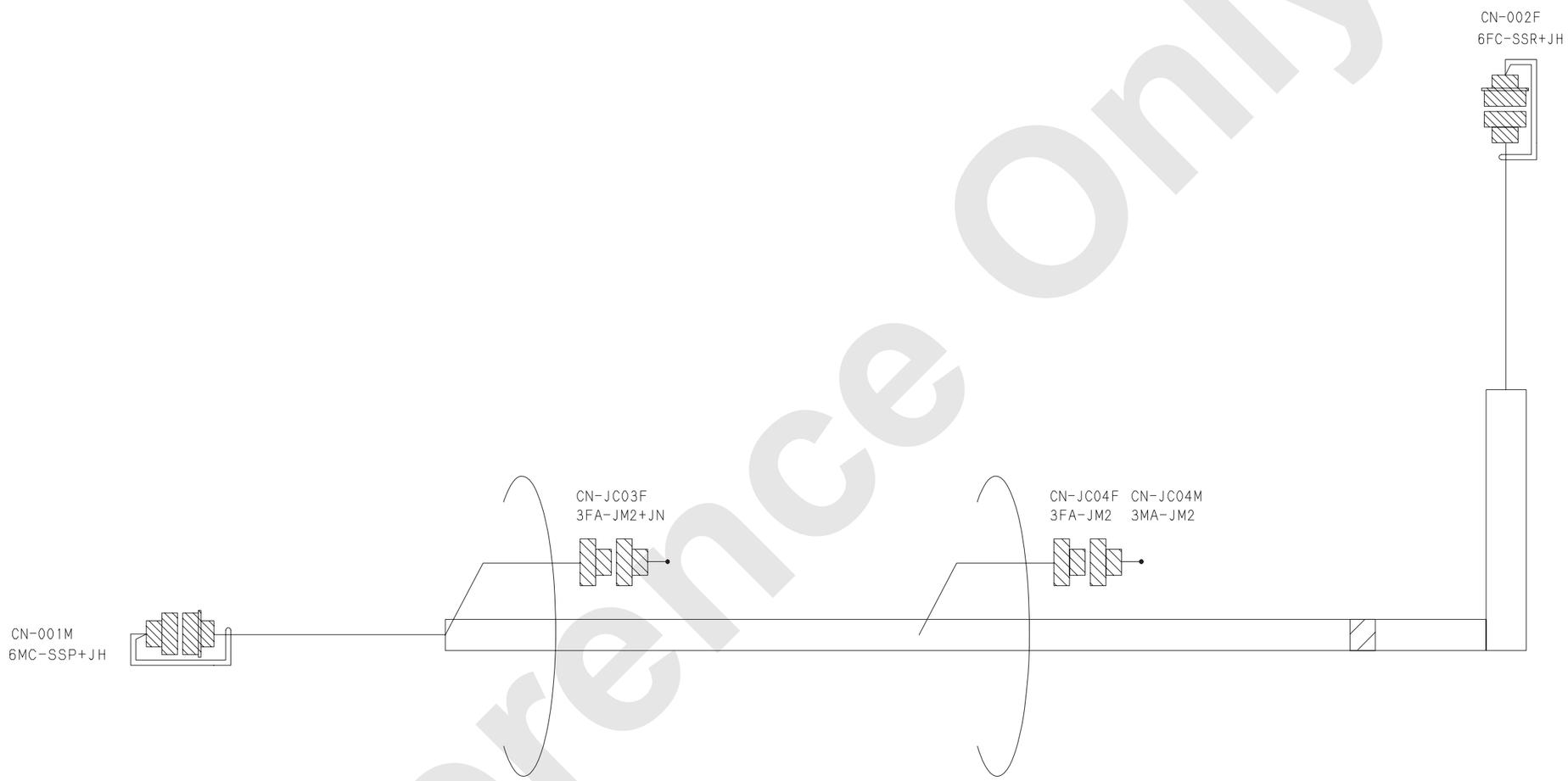

Reference Only

(1/2)

INSERT SEALING (225-0093-000) ON ALL EMPTY PINS

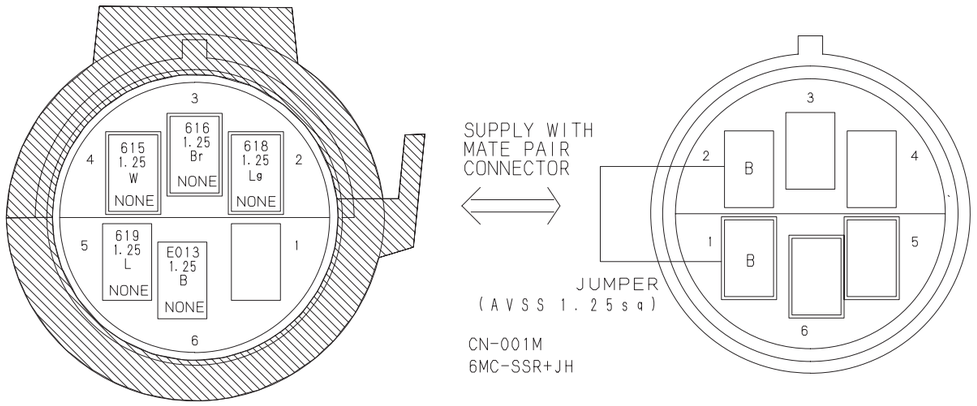

INSERT SEALING (2822357-1) ON ALL EMPTY PINS

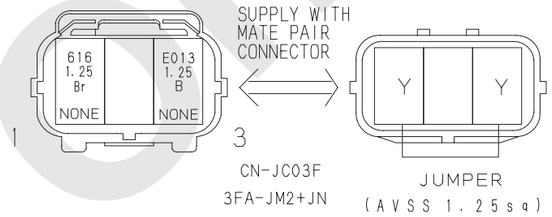

INSERT SEALING (225-0093-000) ON ALL EMPTY PINS

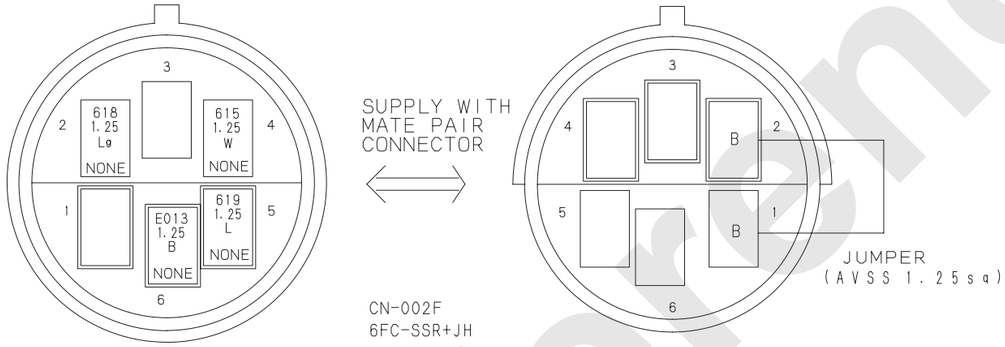

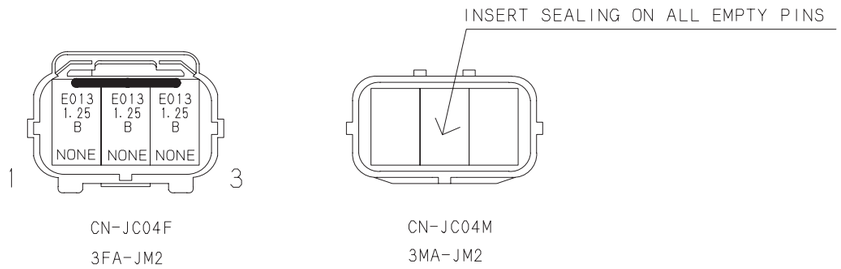

THE WIRE NO. /COLOR LIST

WIRE NO.	WIRE COLOR	WIRE TYPE	SIZE	F R O M	※1	※2	CONNECTION	※2	※1	TO
615	W	AEX	1.25	CN-001M						CN-002F
616	Br	AEX	1.25	CN-001M						CN-JC03F
618	Lg	AEX	1.25	CN-001M						CN-002F
619	L	AEX	1.25	CN-001M						CN-002F
E013	B	AEX	1.25	CN-001M						CN-JC04F
E013	B	AEX	1.25	CN-JC03F						CN-JC04F
E013	B	AEX	1.25	CN-002F						CN-JC04F

※1 IDENTIFICATION SYMBOL

※2 TWO WIRE CONNECT NUMBER

Reference Only

(2/2)

COUNTERWEIGHT DETECTOR HARNESS (c)

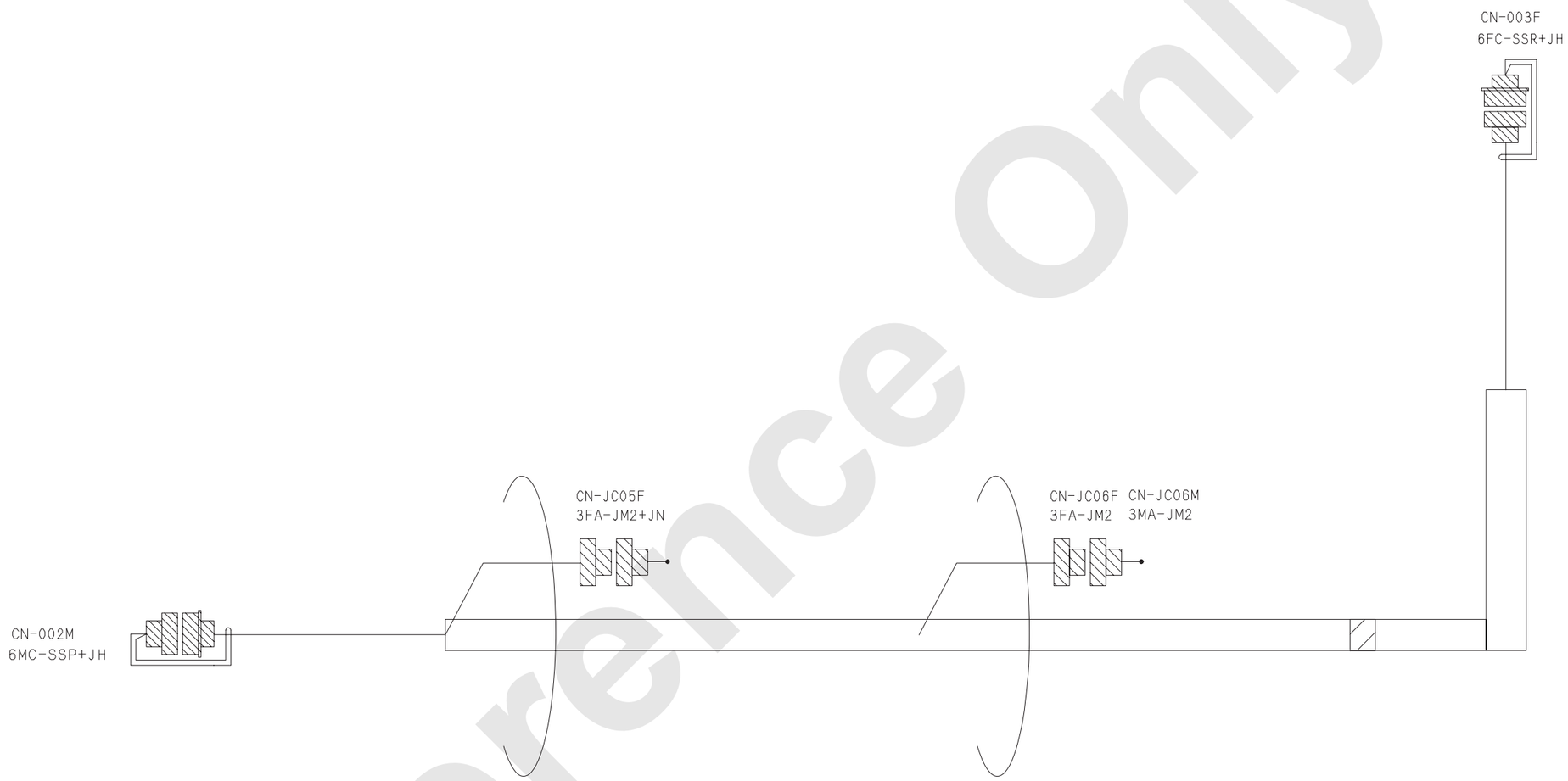

Reference Only

(1/2)

INSERT SEALING (225-0093-000) ON ALL EMPTY PINS

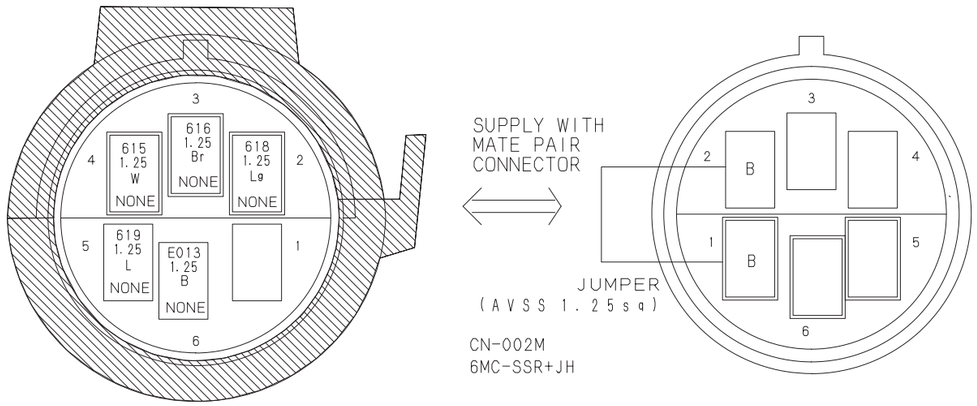

INSERT SEALING (2822357-1) ON ALL EMPTY PINS

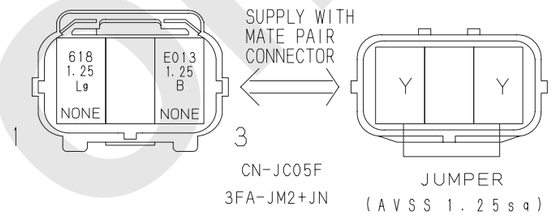

INSERT SEALING (225-0093-000) ON ALL EMPTY PINS

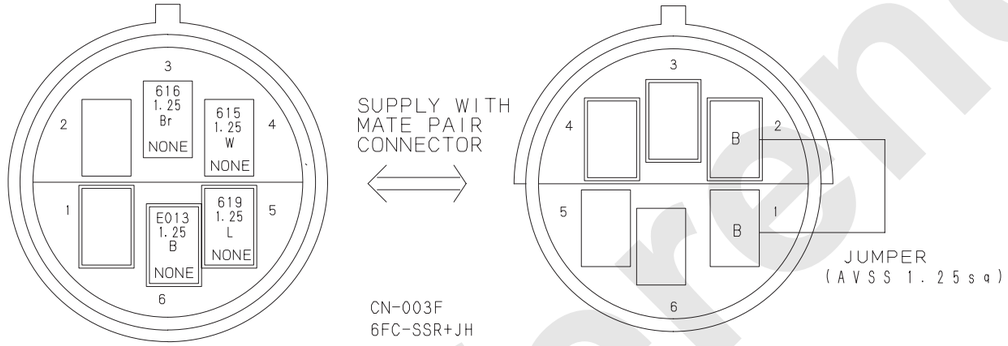

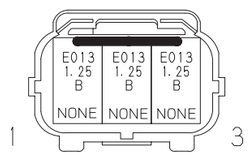

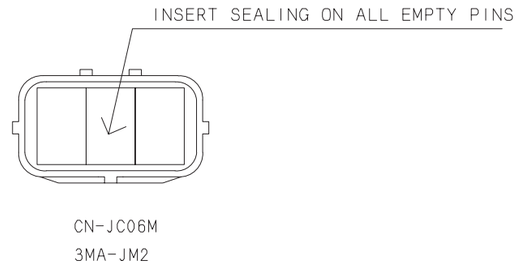

THE WIRE NO. /COLOR LIST

WIRE NO.	WIRE COLOR	WIRE TYPE	SIZE	F R O M	※1	※2	接　　続	※2	※1	T O
615	W	AEX	1.25	CN-002M						CN-003F
616	Br	AEX	1.25	CN-002M						CN-003F
618	Lg	AEX	1.25	CN-002M						CN-JC05F
619	L	AEX	1.25	CN-002M						CN-003F
E013	B	AEX	1.25	CN-002M						CN-JC06F
E013	B	AEX	1.25	CN-JC05F						CN-JC06F
E013	B	AEX	1.25	CN-003F						CN-JC06F

※1 IDENTIFICATION SYMBOL

※2 TWO WIRE CONNECT NUMBER

Reference Only

(2/2)

COUNTERWEIGHT DETECTOR HARNESS (d)

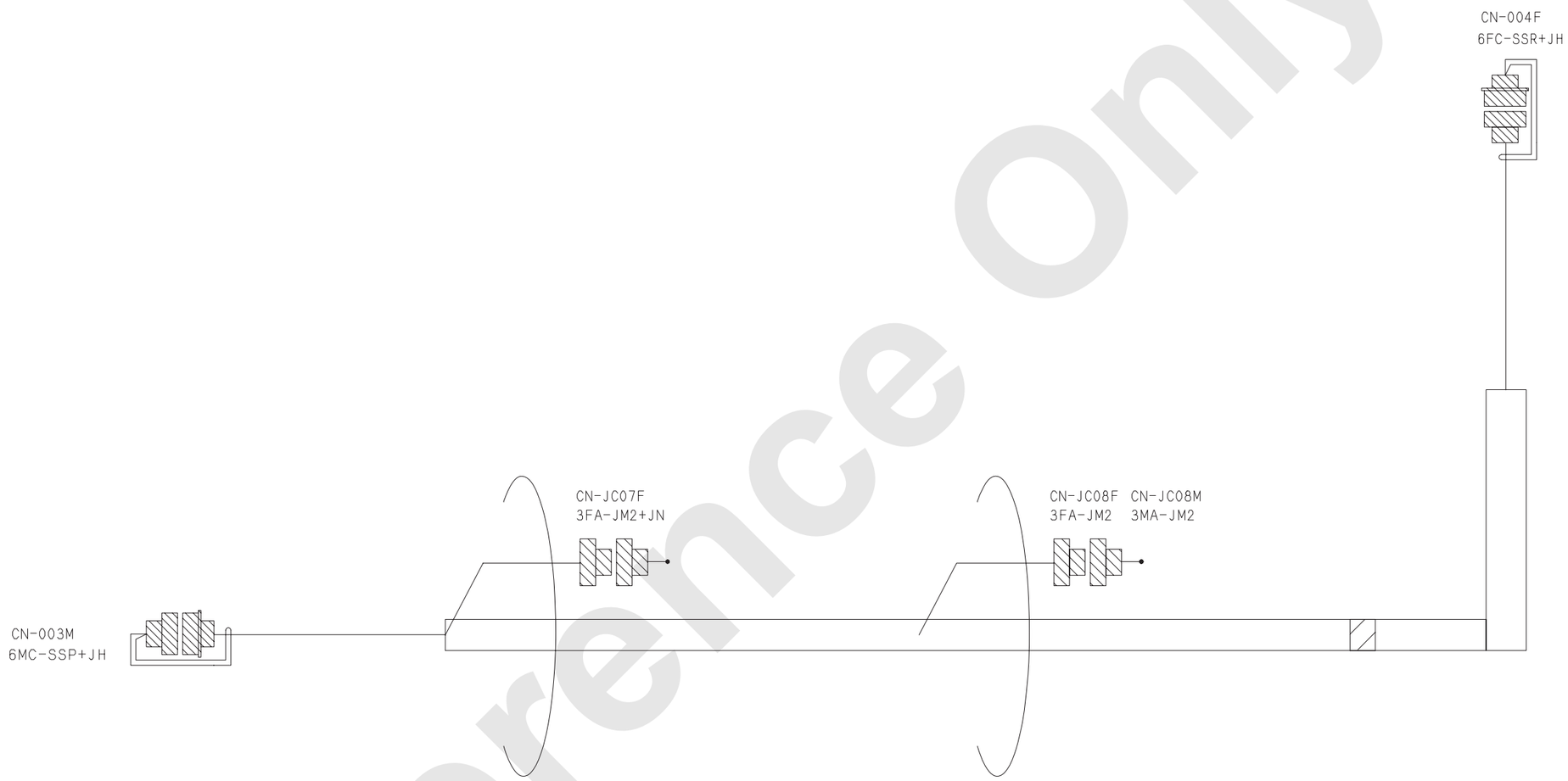

Reference Only

(1/2)

INSERT SEALING (225-0093-000) ON ALL EMPTY PINS

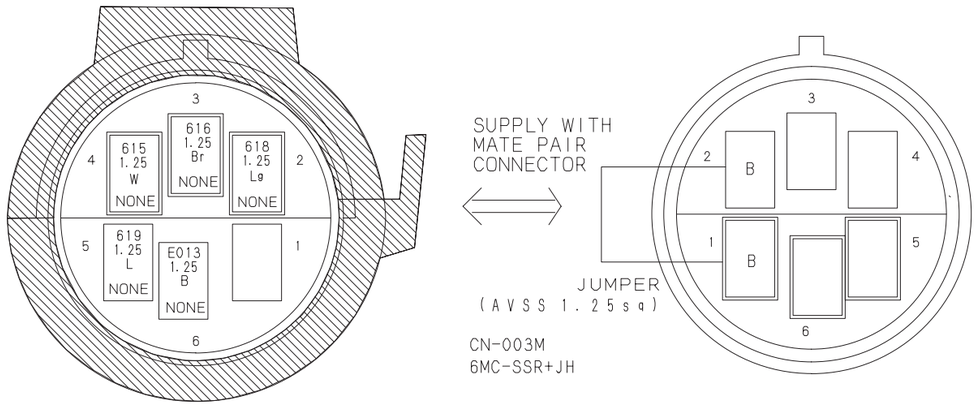

INSERT SEALING (2822357-1) ON ALL EMPTY PINS

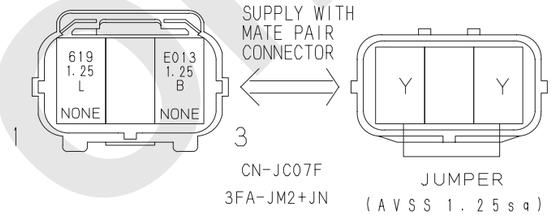

INSERT SEALING (225-0093-000) ON ALL EMPTY PINS

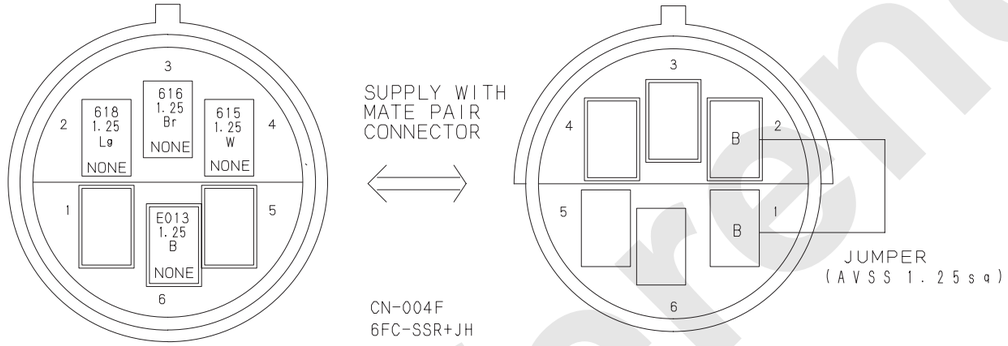

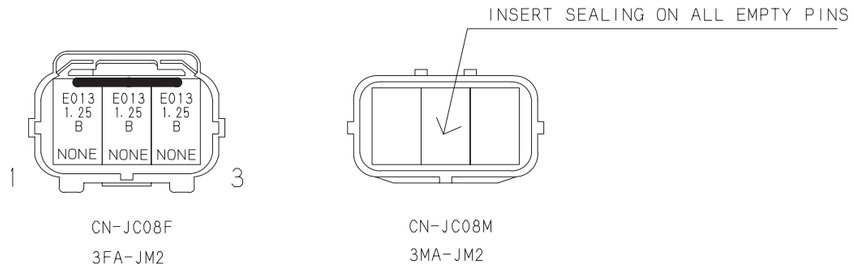

THE WIRE NO. /COLOR LIST

WIRE NO.	WIRE COLOR	WIRE TYPE	SIZE	FROM	※1	※2	接続	※2	※1	TO
615	Y/L	AEX	1.25	CN-003M						CN-004F
616	Br	AEX	1.25	CN-003M						CN-004F
618	Lg	AEX	1.25	CN-003M						CN-004F
619	L	AEX	1.25	CN-003M						CN-JC07F
E013	B	AEX	1.25	CN-003M						CN-JC08F
E013	B	AEX	1.25	CN-JC07F						CN-JC08F
E013	B	AEX	1.25	CN-004F						CN-JC08F

※1 IDENTIFICATION SYMBOL

※2 TWO WIRE CONNECT NUMBER

Reference Only

(2/2)

14. CARBODY WEIGHT DETECTOR / OPT.

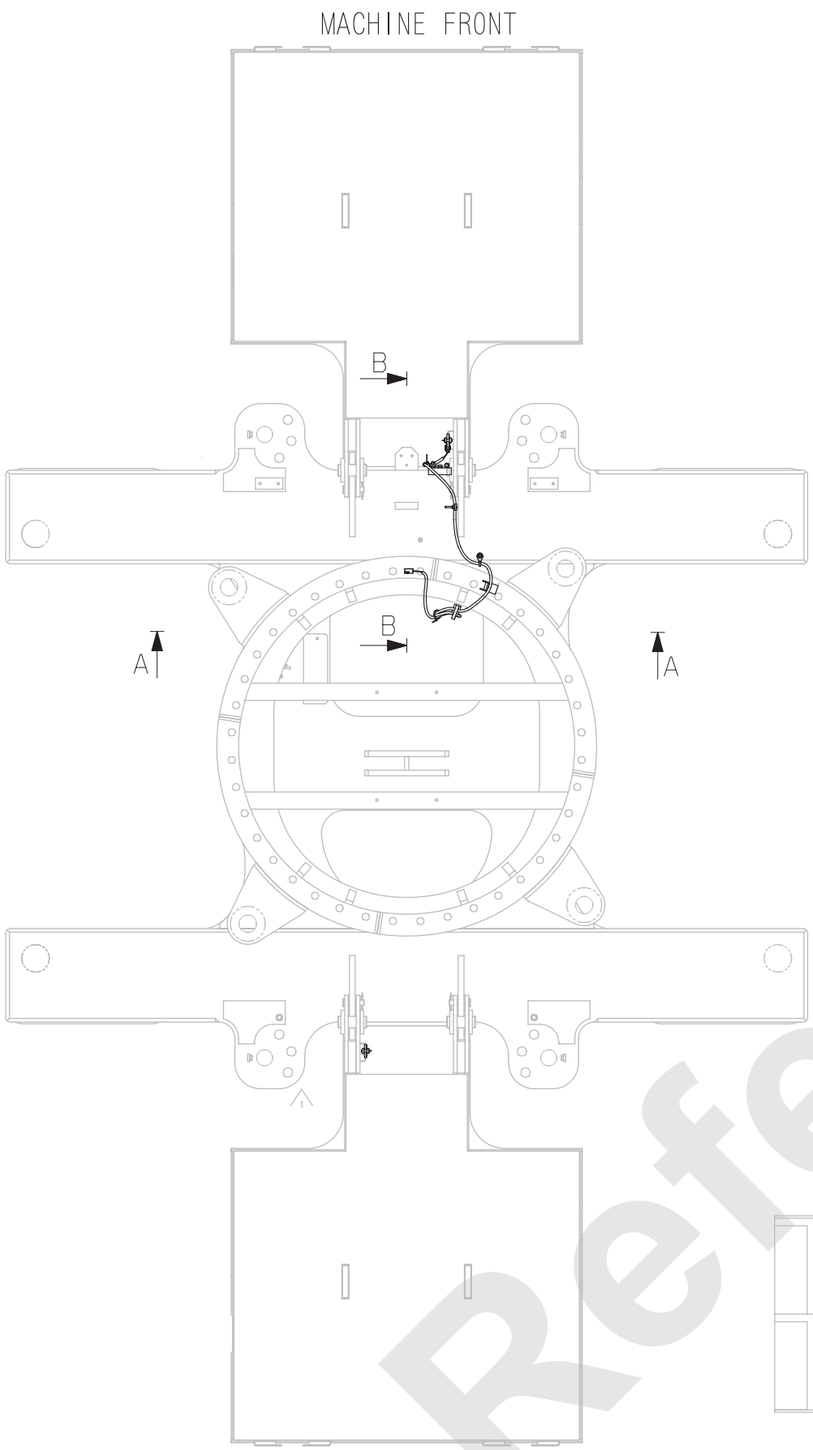

FOR GH

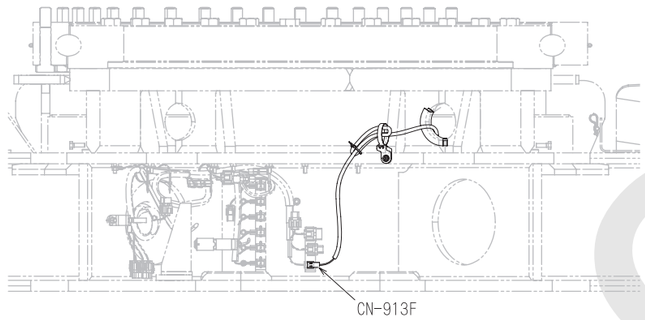

SECTION A-A

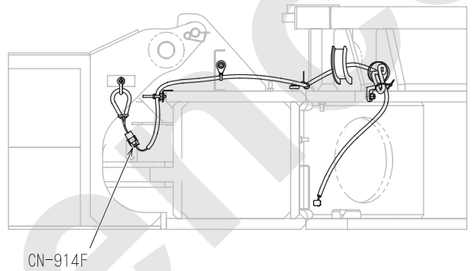

SECTION B-B

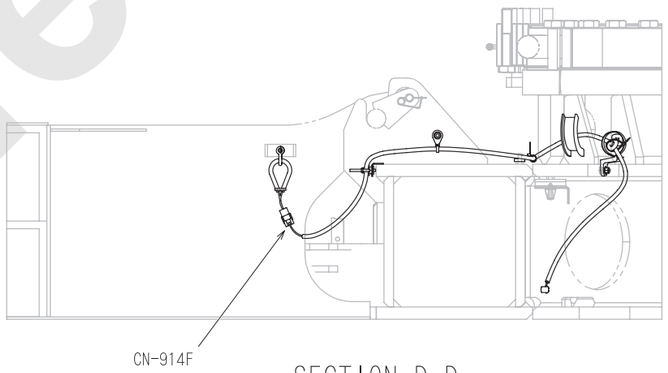

SECTION D-D

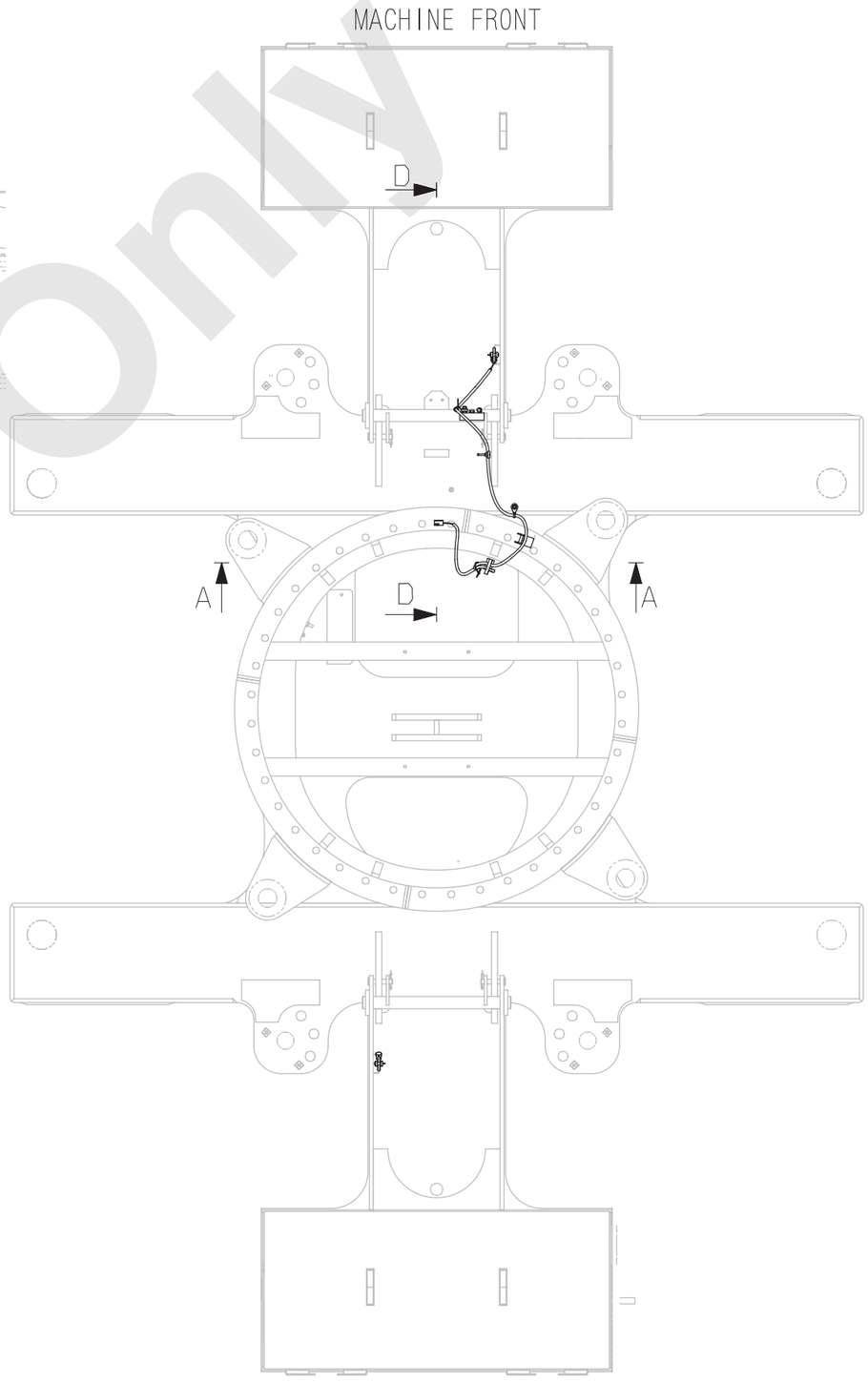

FOR GG

Reference Only

CARBODY WEIGHT DETECTOR HARNESS (a)

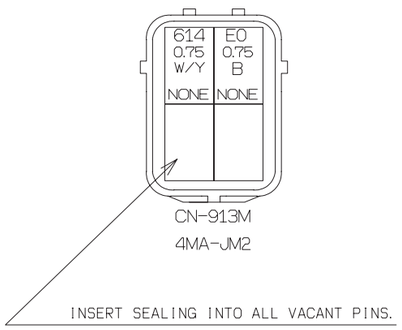

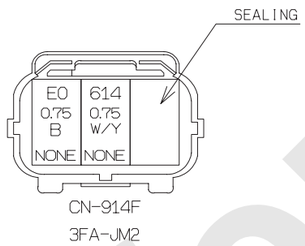

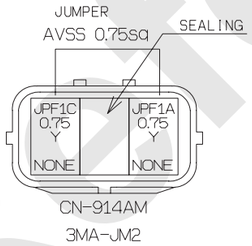

THE WIRE NO./COLOR LIST

WIRE NO.	WIRE COLOR	WIRE TYPE	SIZE	F R O M	※1	CONNECTION	※1	T O
614	W/Y	AVSS	0.75	CN-914F				CN-913M
E0	B	AVSS	0.75	CN-914F				CN-913M
JPF1A	Y	AVSS	0.75	CN-914AM				
JPF1C	Y	AVSS	0.75					CN-914AM

※1 TWO WIRE CONNECT NUMBER

Reference Only

CARBODY WEIGHT DETECTOR HARNESS (b)

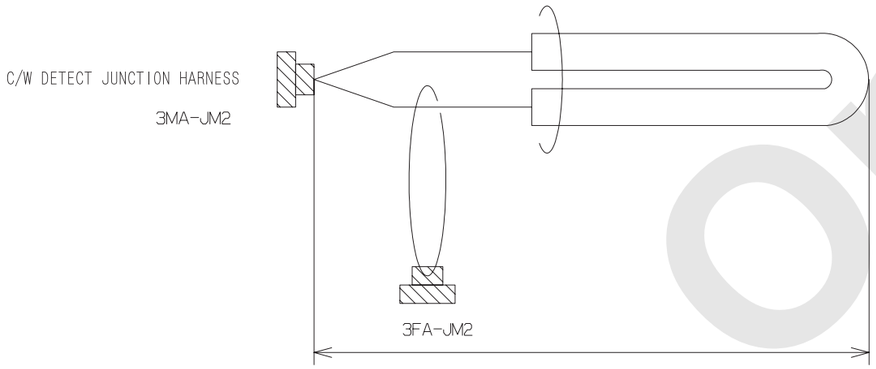

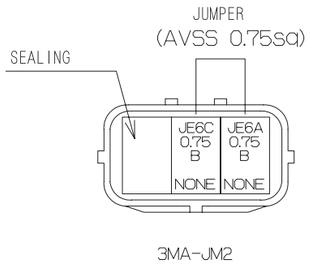

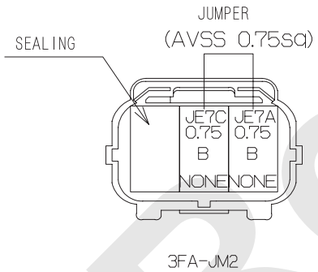

THE WIRE NO./COLOR LIST

WIRE NO.	WIRE COLOR	WIRE TYPE	SIZE	F R O M	※1	CONNECTION	※1	T O
JE6A	B	AVSS	0.75					
JE6C	B	AVSS	0.75					
JE7A	B	AVSS	0.75					
JE7C	B	AVSS	0.75					

※1 TWO WIRE CONNECT NUMBER

Reference Only

CARBODY WEIGHT DETECTOR HARNESS (c)

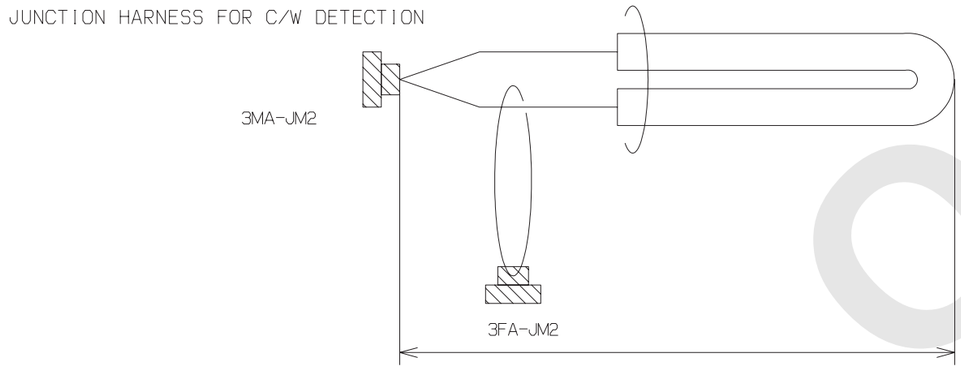

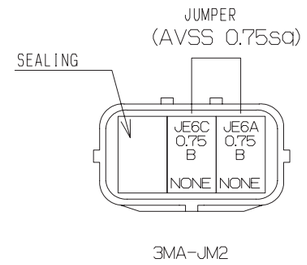

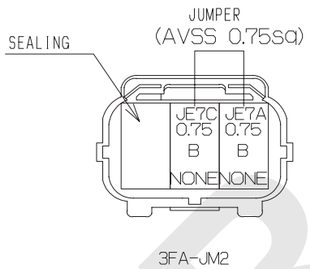

THE WIRE NO./COLOR LIST

WIRE NO.	WIRE COLOR	WIRE TYPE	SIZE	F R O M	※1	CONNECTION	※1	T O
JE6A	B	AVSS	0.75					
JE6C	B	AVSS	0.75					
JE7A	B	AVSS	0.75					
JE7C	B	AVSS	0.75					

※1 TWO WIRE CONNECT NUMBER

Reference Only

15. BOOM OVER HOIST PREVENTING

- **10000A-1**

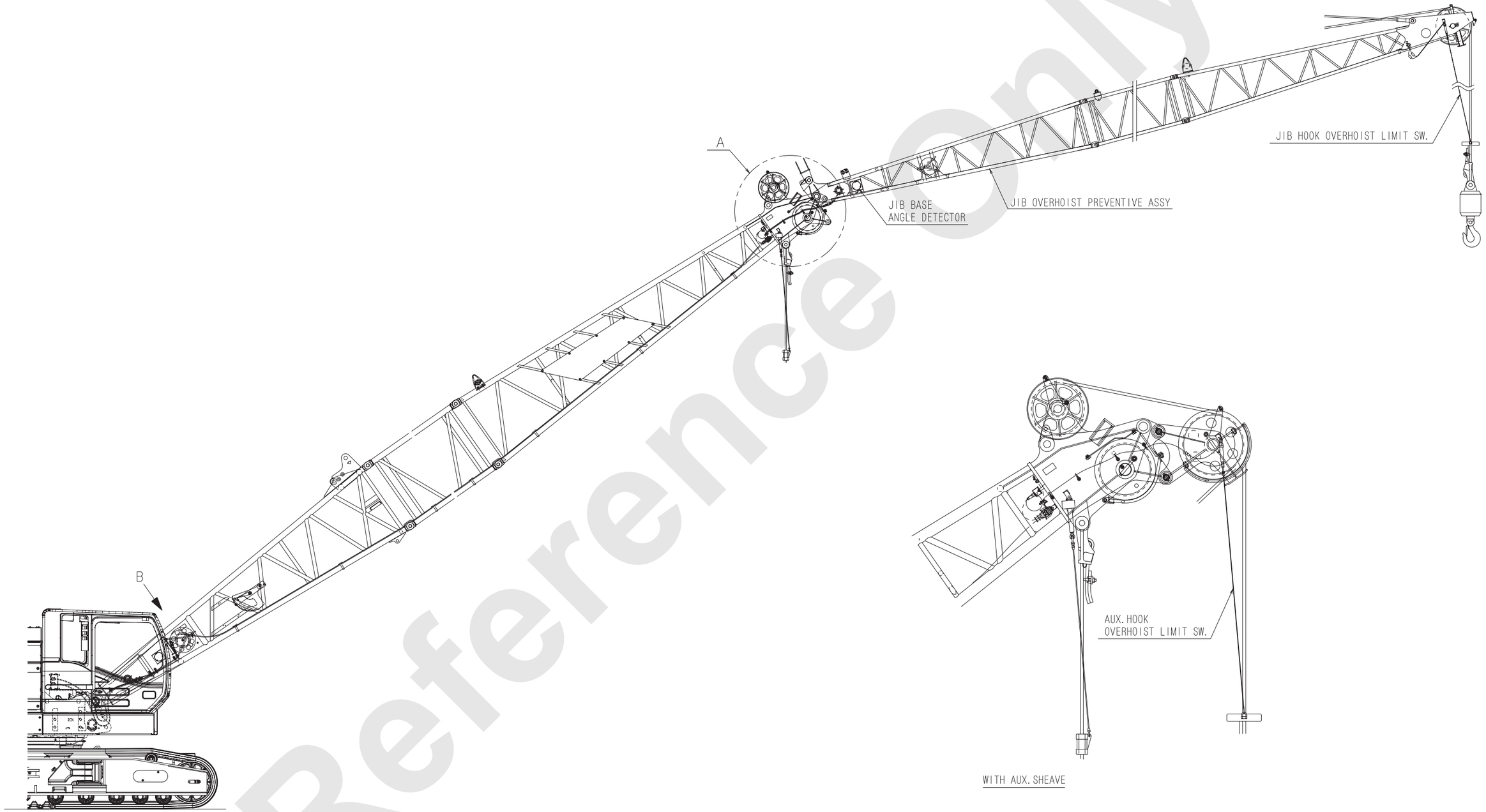

Reference Only

(1/4)

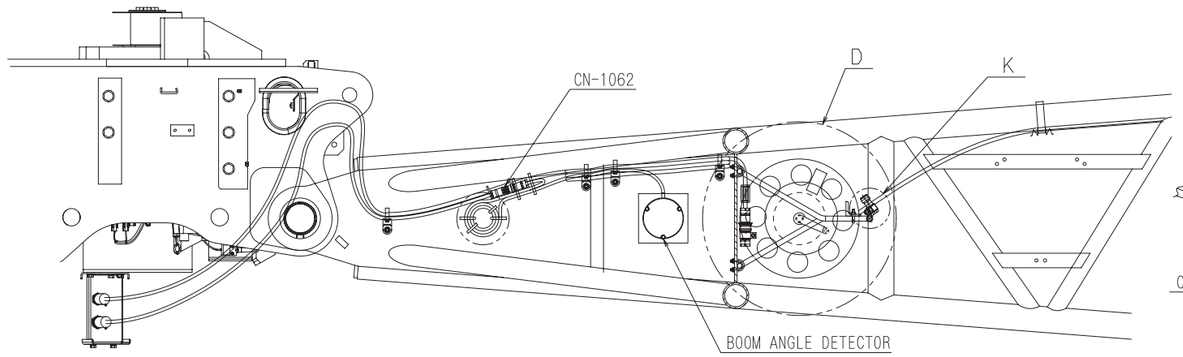

SECTION C-C

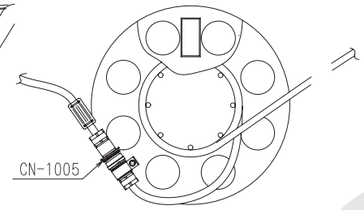

DETAIL OF D

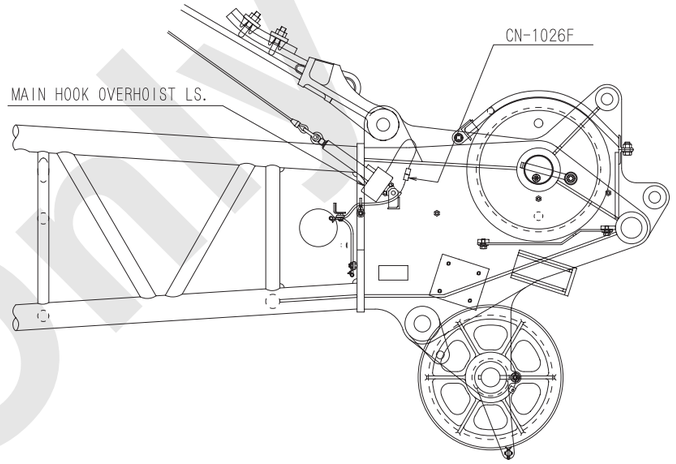

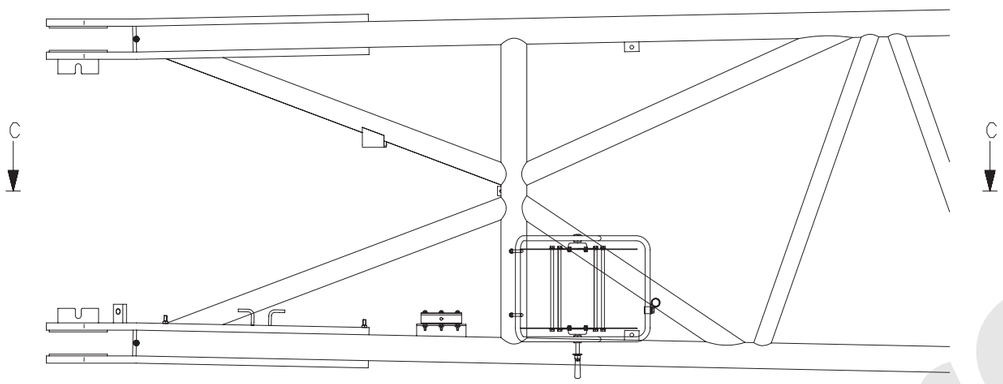

VIEW FROM B (S=1/10)

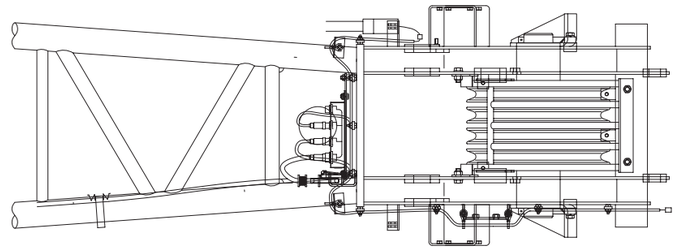

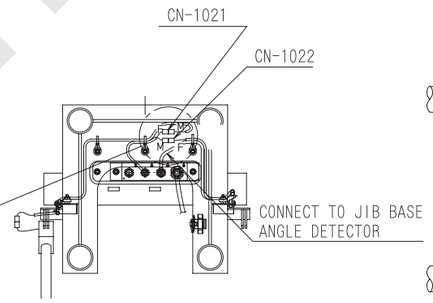

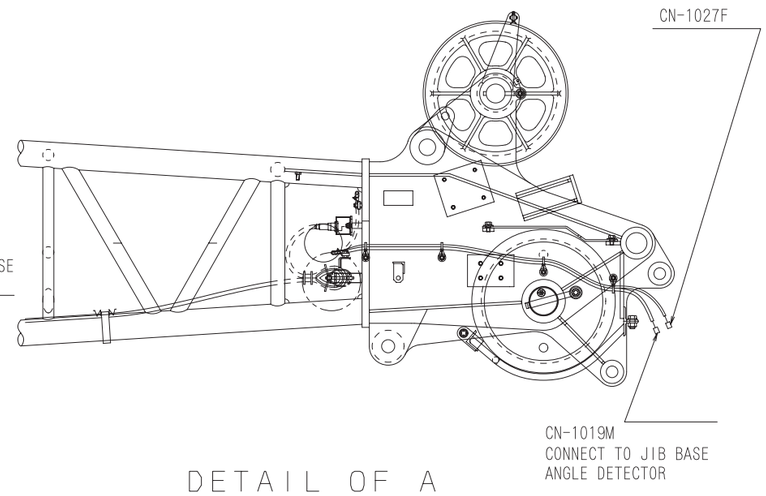

DETAIL OF A

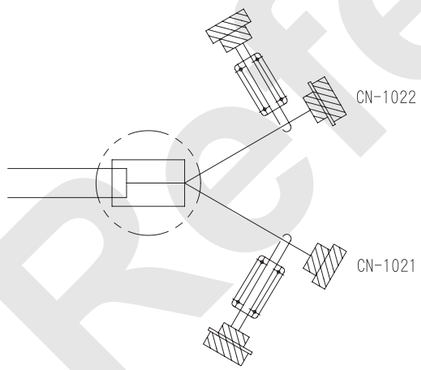

Reference Only

(2/4)

- **10000A-1**

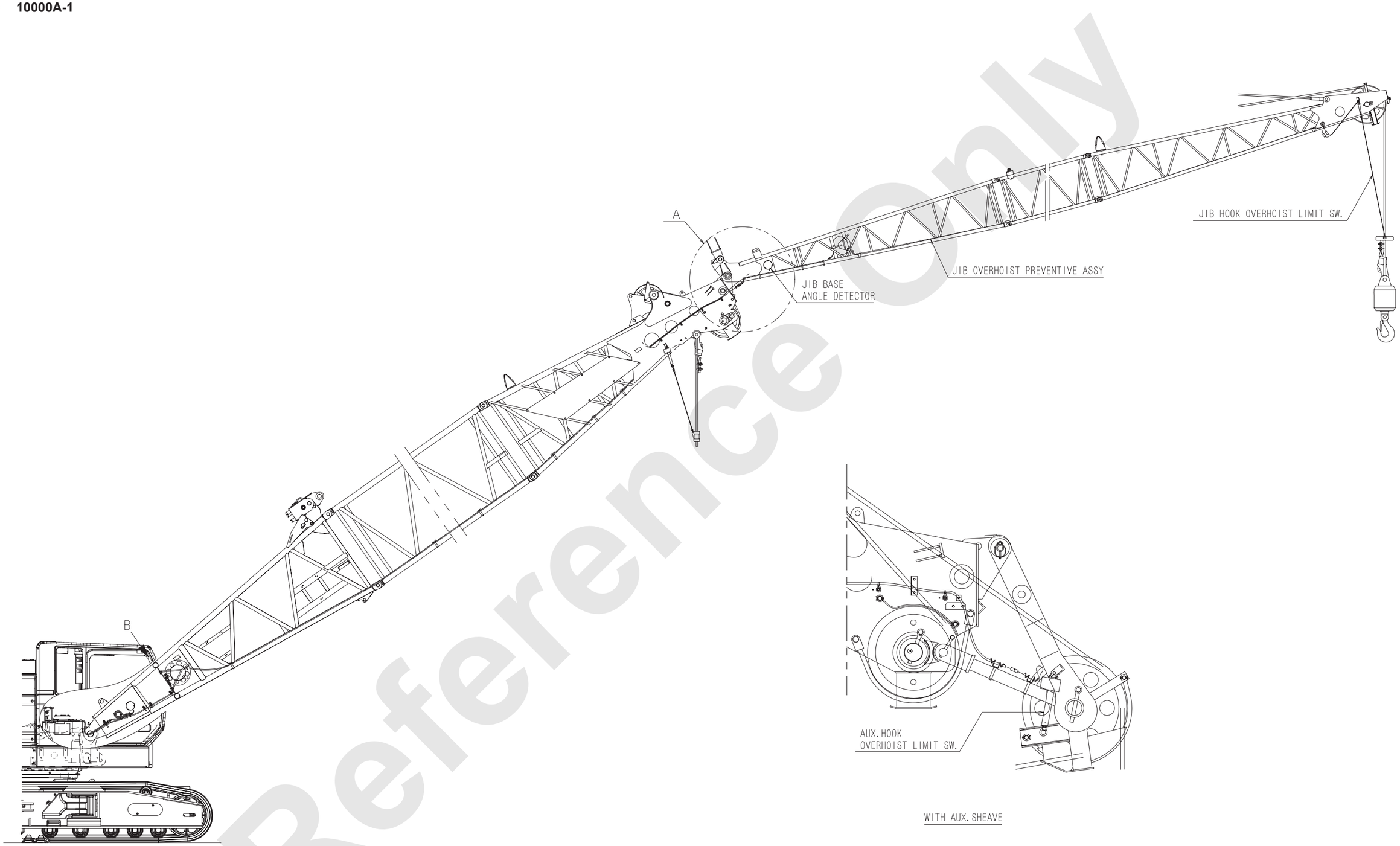

Reference Only

(3/4)

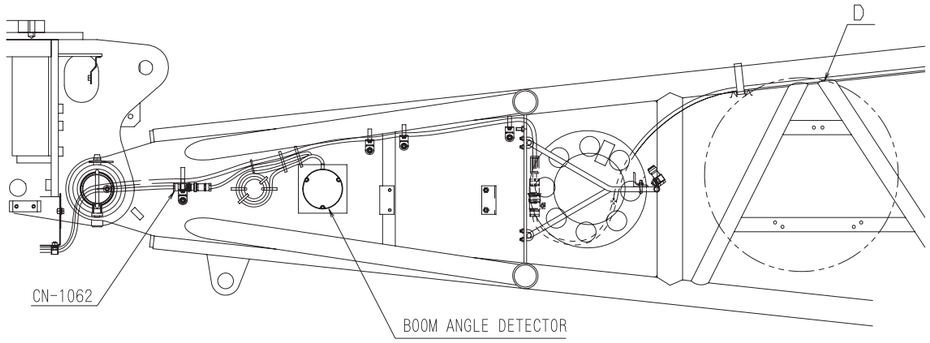

SECTION C-C

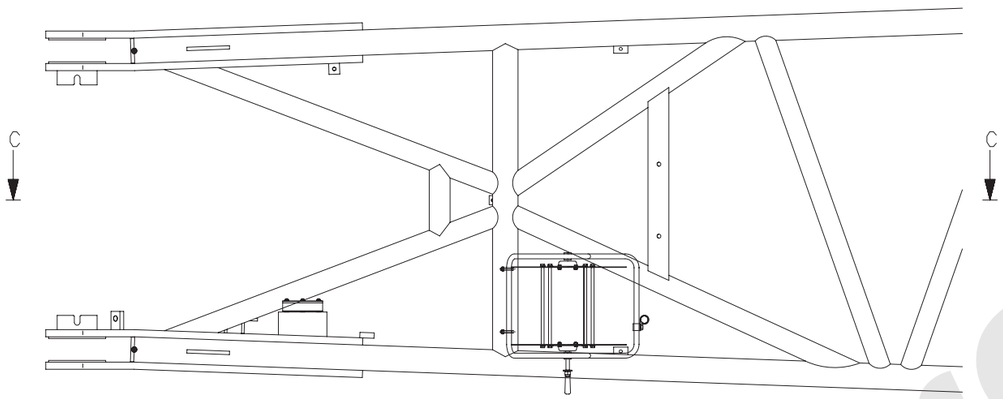

VIEW FROM B (S=1/10)

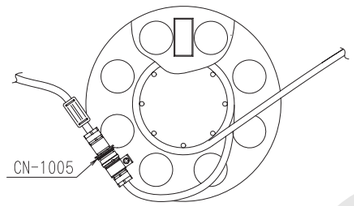

DETAIL OF D

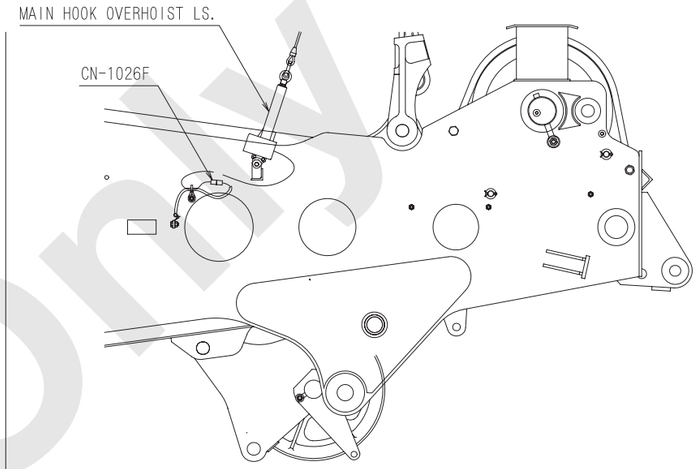

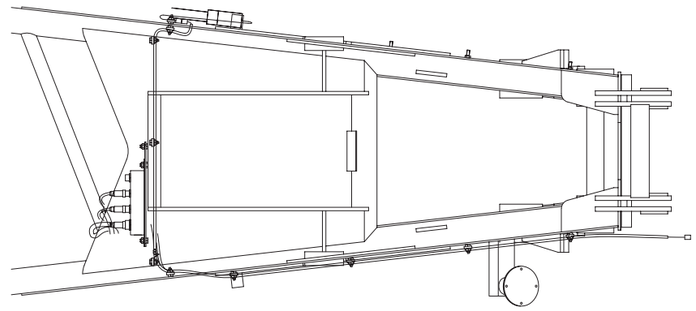

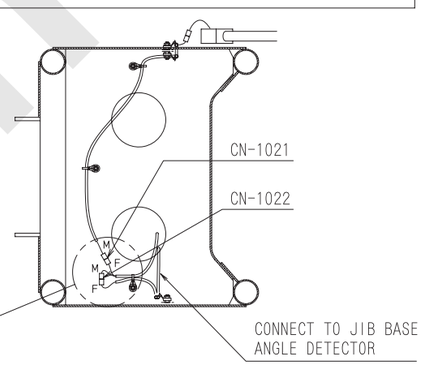

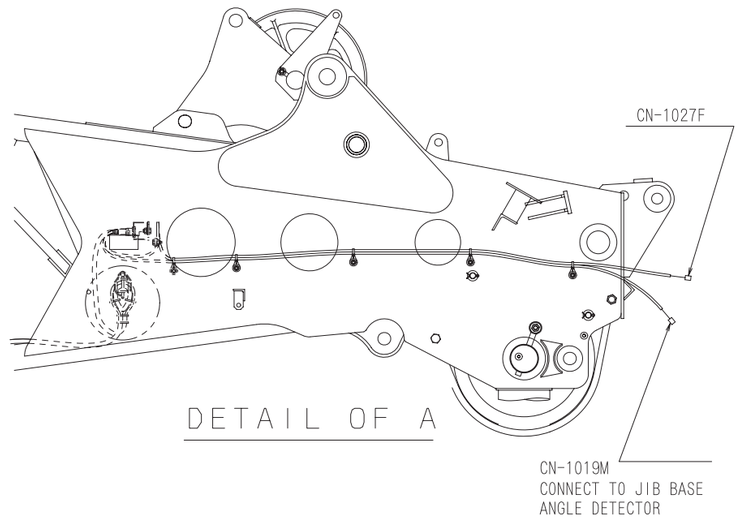

DETAIL OF A

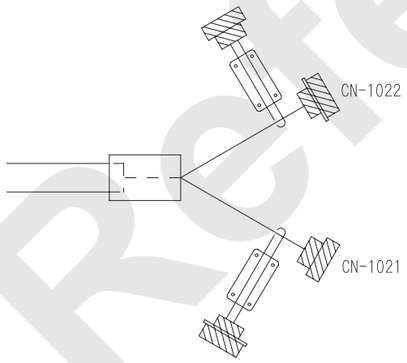

(4/4)

Reference Only

BOOM OVER HOIST PREVENTING HARNESS (a)

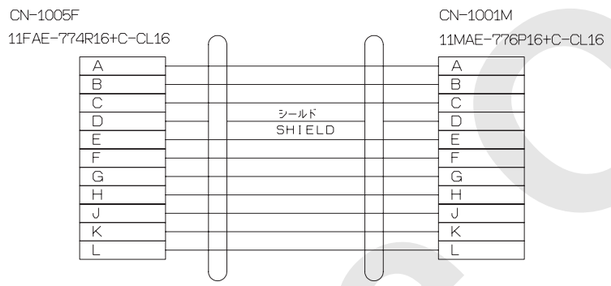

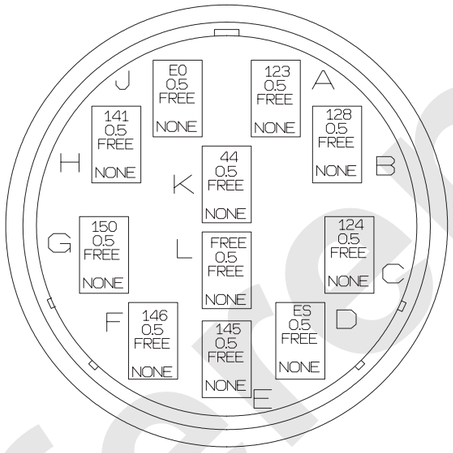

CN-1001M
11MAE-776P16+C-CL16

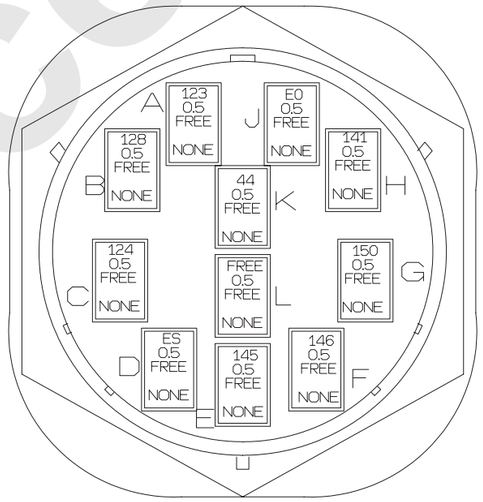

CN-1005F
11FAE-774R16+C-CL16

THE WIRE NO. /COLOR LIST

WIRE NO.	WIRE COLOR	WIRE TYPE	SIZE	F R O M	※1	※2	CONNECTION	※2	※1	T O
44	Free	2PNCT-SB	0.5	CN-1005F	10				10	CN-1001M
123	Free	2PNCT-SB	0.5	CN-1005F	1				1	CN-1001M
124	Free	2PNCT-SB	0.5	CN-1005F	3				3	CN-1001M
128	Free	2PNCT-SB	0.5	CN-1005F	2				2	CN-1001M
141	Free	2PNCT-SB	0.5	CN-1005F	8				8	CN-1001M
145	Free	2PNCT-SB	0.5	CN-1005F	5				5	CN-1001M
146	Free	2PNCT-SB	0.5	CN-1005F	6				6	CN-1001M
150	Free	2PNCT-SB	0.5	CN-1005F	7				7	CN-1001M
E0	Free	2PNCT-SB	0.5	CN-1005F	9				9	CN-1001M
FREE	Free	2PNCT-SB	0.5	CN-1005F	11				11	CN-1001M
ES	Free	SHIELD		CN-1005F	4					(CN-1001M)
ES	Free	SHIELD		(CN-1005F)					4	CN-1001M

※1 PIN NUMBER
※2 TWO WIRE CONNECT NUMBER

Reference Only

BOOM OVER HOIST PREVENTING HARNESS (b)

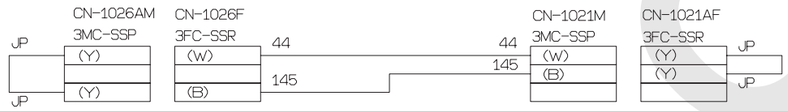

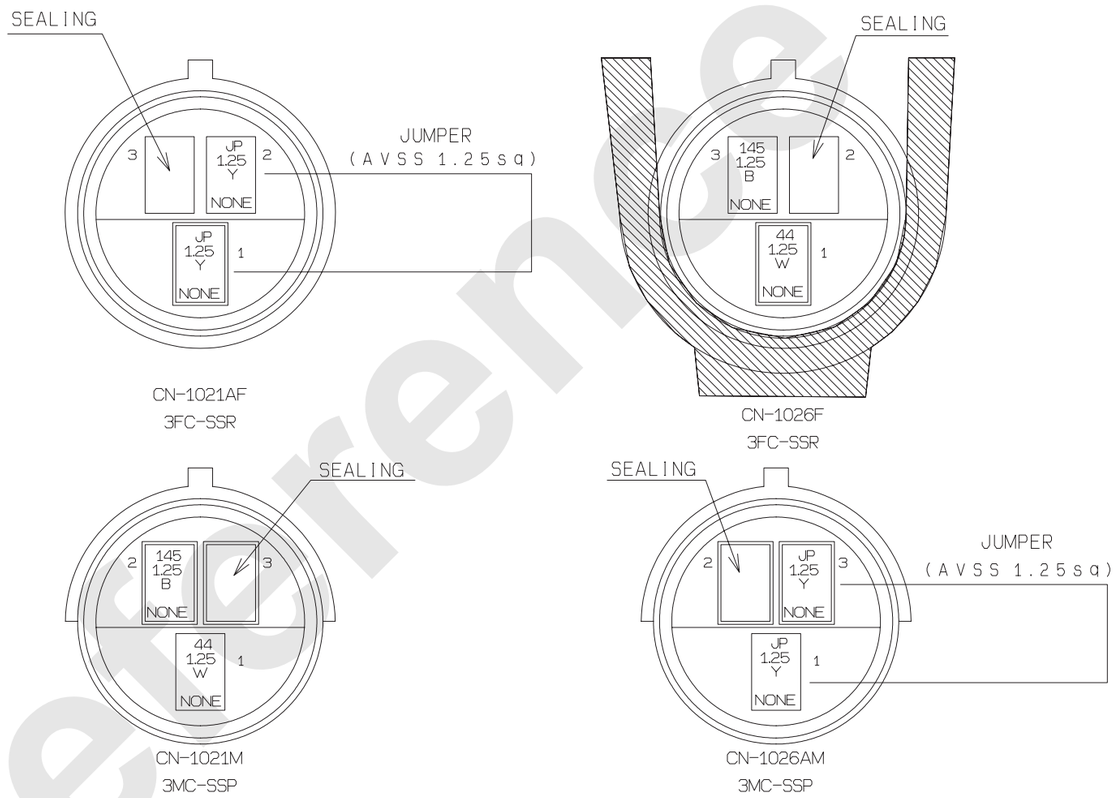

THE WIRE NO./COLOR LIST

WIRE NO.	WIRE COLOR	WIRE TYPE	SIZE	F R O M	※1	※2	CONNECTION	※2	※1	T O
44	W	VCTF	1.25	CN-1021M						CN-1026F
145	B	VCTF	1.25	CN-1021M						CN-1026F
JP	Y	AVSS	1.25	CN-1021AF						
JP	Y	AVSS	1.25							CN-1021AF
JP	Y	AVSS	1.25	CN-1026AM						
JP	Y	AVSS	1.25							CN-1026AM

※1 IDENTIFICATION SYMBOL
※2 TWO WIRE CONNECT NUMBER

Reference Only

BOOM OVER HOIST PREVENTING HARNESS (c)

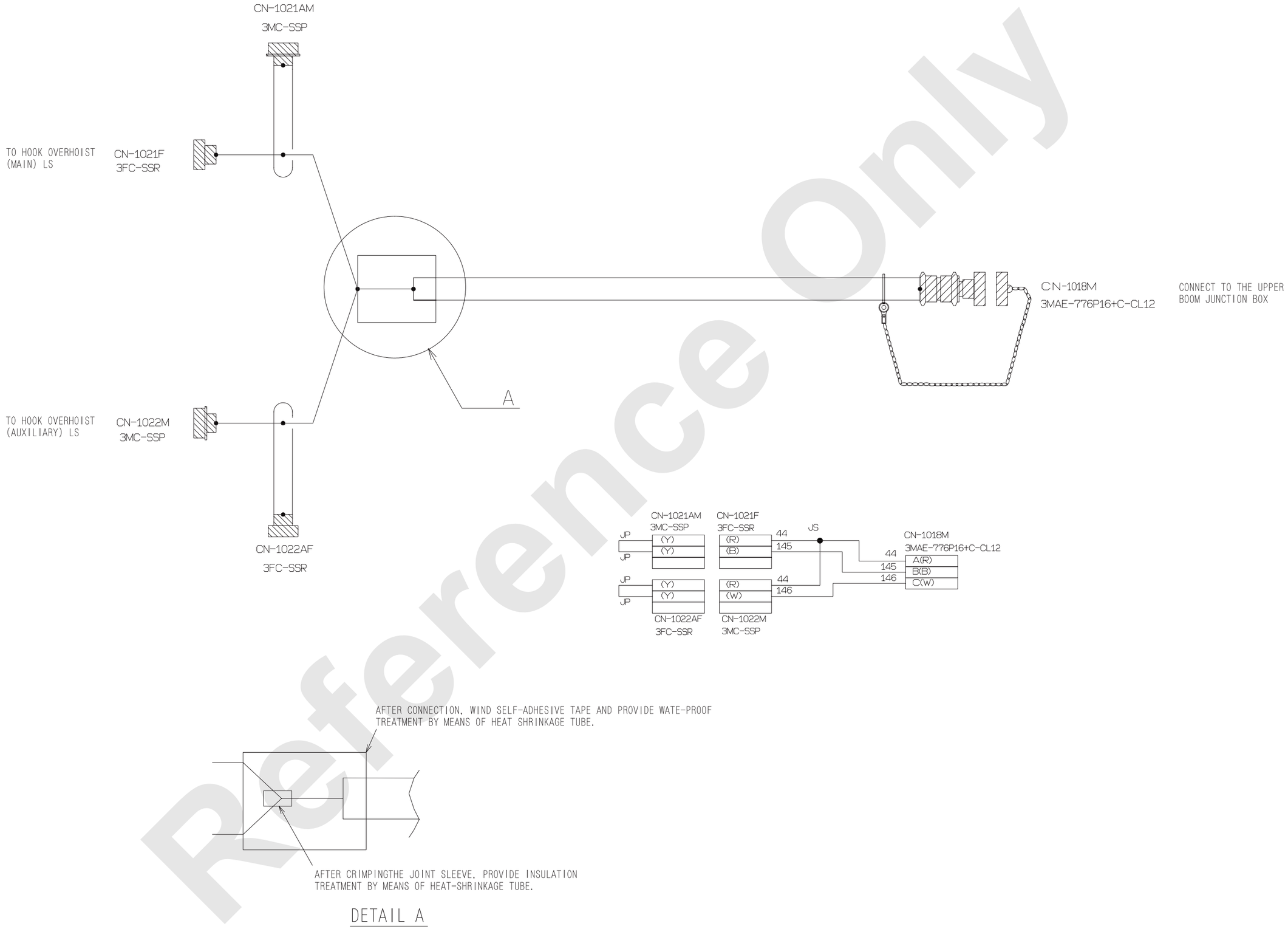

Reference Only

(1/2)

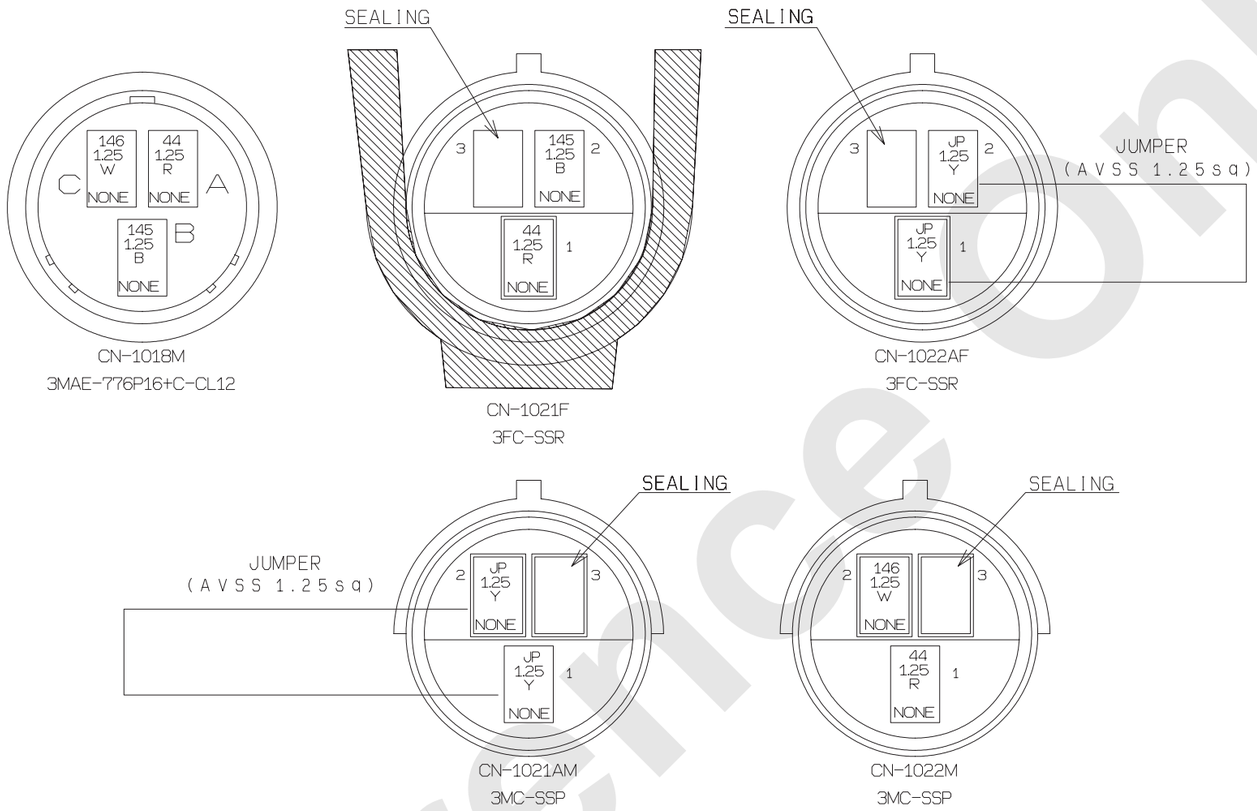

THE WIRE NO./COLOR LIST

WIRE NO.	WIRE COLOR	WIRE TYPE	SIZE	F R O M	※1	※2	CONNECTION	※2	※1	T O
44	R	AVSS	1.25	CN-1021F			————			JS
44	R	AVSS	1.25	CN-1022M			————			JS
44	R	2PNCT-SR	1.25	CN-1018M			————			JS
145	B	2PNCT-SR	1.25	CN-1021F			————			CN-1018M
146	W	2PNCT-SR	1.25	CN-1022M			————			CN-1018M
JP	Y	AVSS	1.25	CN-1021AM			————			CN-1021AM
JP	Y	AVSS	1.25	CN-1022AF			————			CN-1022AF

※1 IDENTIFICATION SYMBOL
※2 TWO WIRE CONNECT NUMBER

Reference Only

(2/2)

BOOM OVER HOIST PREVENTING HARNESS (d)

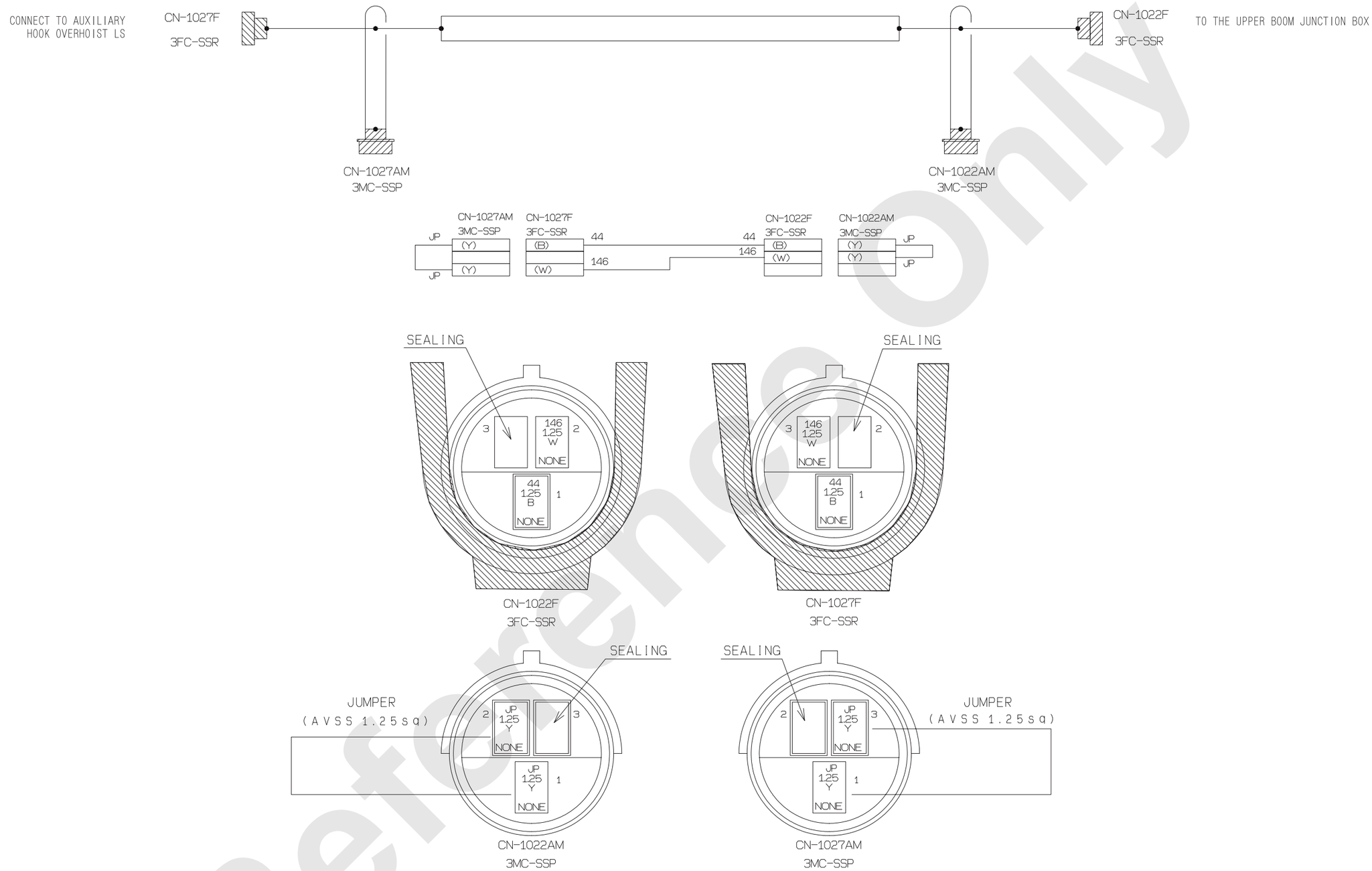

THE WIRE NO. /COLOR LIST

※1 IDENTIFICATION SYMBOL
※2 TWO WIRE CONNECT NUMBER

WIRE NO.	WIRE COLOR	WIRE TYPE	SIZE	F R O M	※1	※2	CONNECTION	※2	※1	T O
44	B	VCTF	1.25	CN-1022F						CN-1027F
146	W	VCTF	1.25	CN-1022F						CN-1027F
JP	Y	AVSS	1.25	CN-1022AM						
JP	Y	AVSS	1.25							CN-1022AM
JP	Y	AVSS	1.25	CN-1027AM						
JP	Y	AVSS	1.25							CN-1027AM

Reference Only

16. JIB OVER HOIST PREVENTING

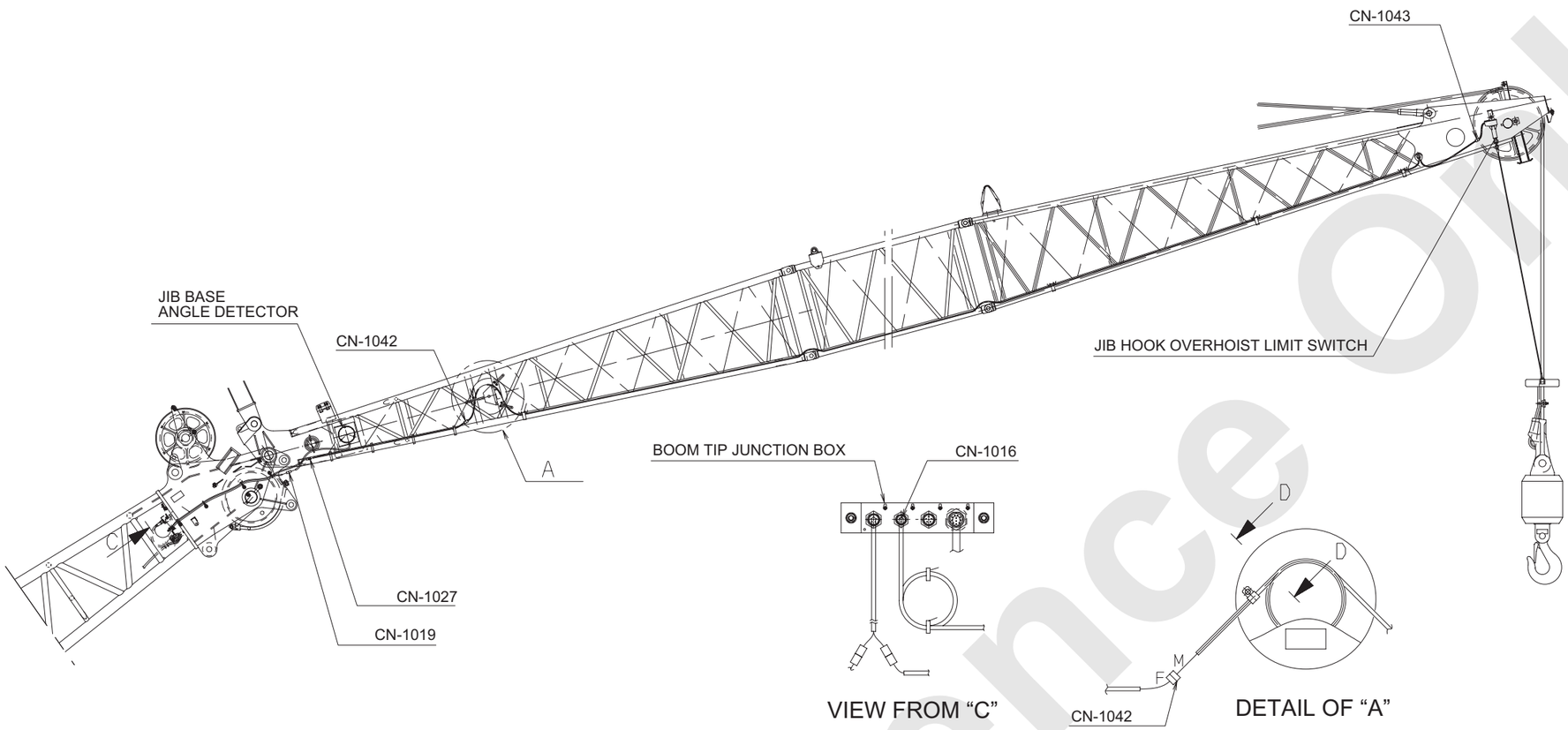

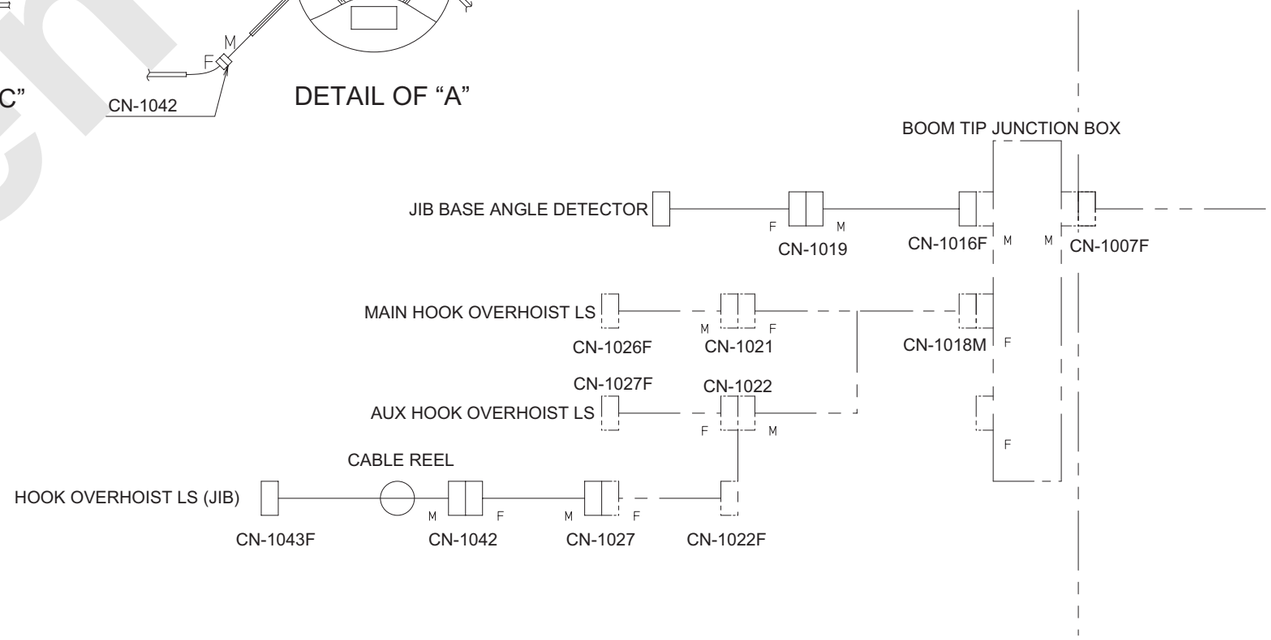

Reference Only

JIB OVER HOIST PREVENTING HARNESS (a)

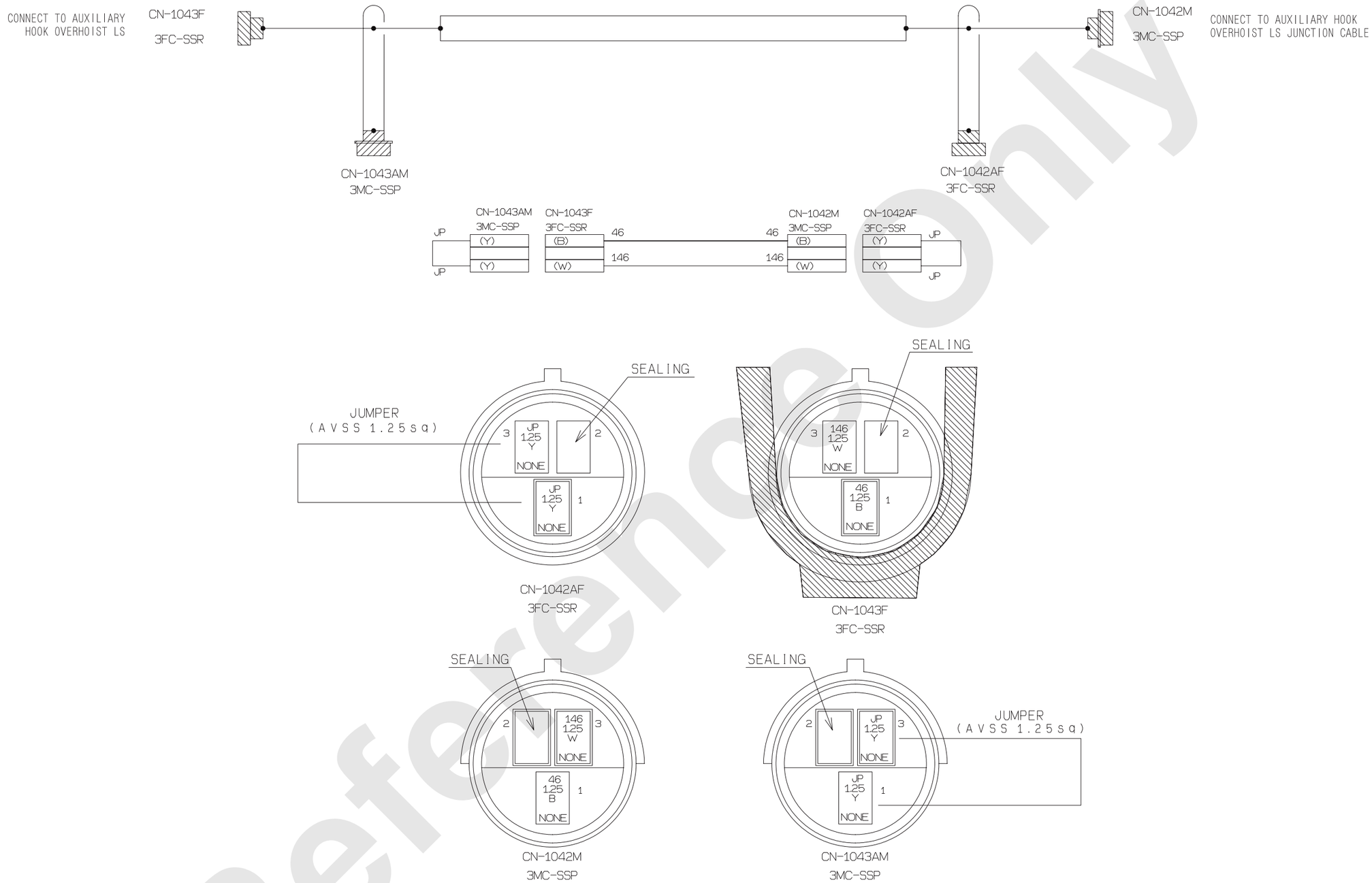

THE WIRE NO. /COLOR LIST

WIRE NO.	WIRE COLOR	WIRE TYPE	SIZE	F R O M	※1	※2	CONNECTION	※2	※1	T O
46	B	VCTF	1.25	CN-1043F			———			CN-1042M
146	W	VCTF	1.25	CN-1043F			———			CN-1042M
JP	Y	AVSS	1.25	CN-1042AF			——┐			
JP	Y	AVSS	1.25				┐——			CN-1042AF
JP	Y	AVSS	1.25	CN-1043AM			——┐			
JP	Y	AVSS	1.25				┐——			CN-1043AM

※1 IDENTIFICATION SYMBOL
※2 TWO WIRE CONNECT NUMBER

Reference Only

JIB OVER HOIST PREVENTING HARNESS (b)

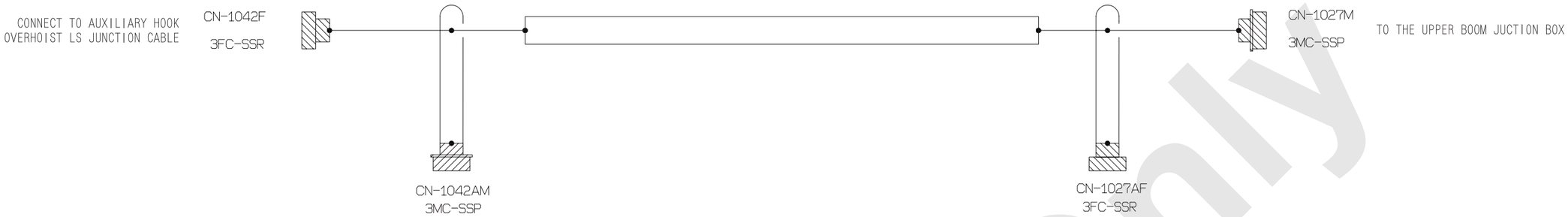

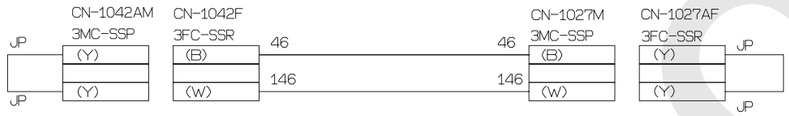

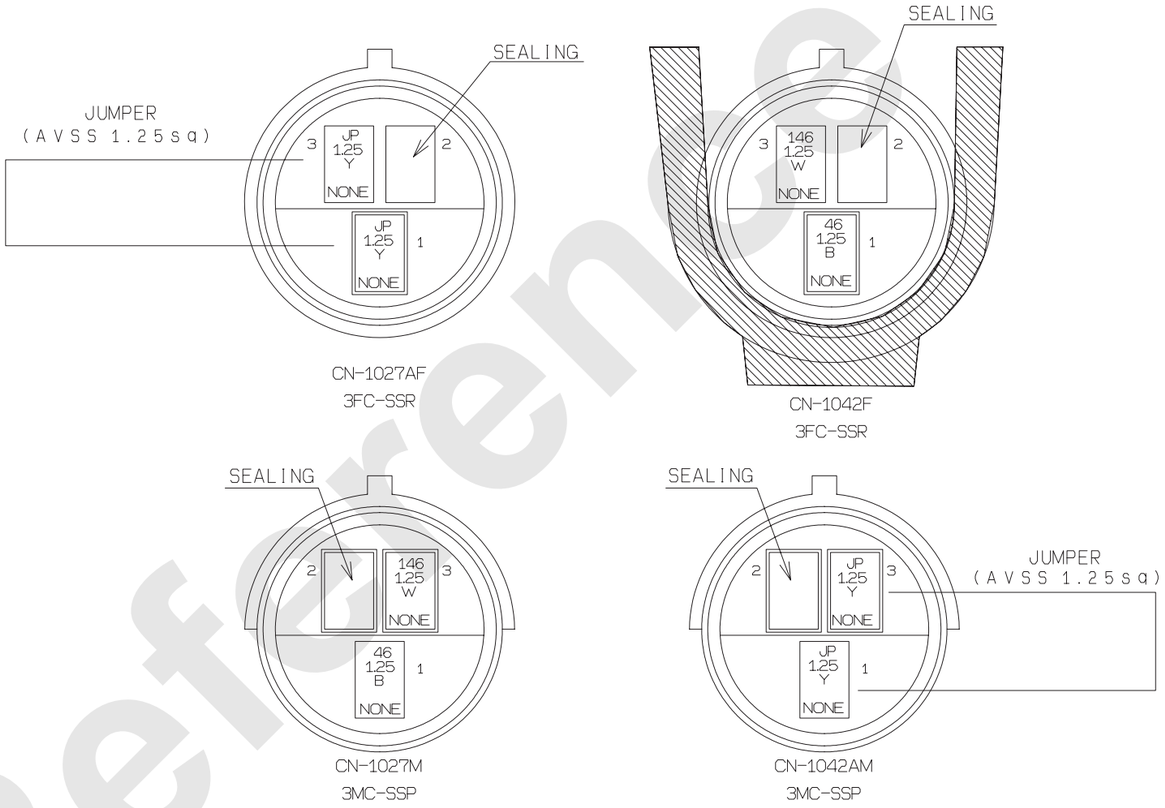

THE WIRE NO./COLOR LIST

WIRE NO.	WIRE COLOR	WIRE TYPE	SIZE	F R O M	※1	※2	CONNECTION	※2	※1	T O
46	B	VCTF	1.25	CN-1042F						CN-1027M
146	W	VCTF	1.25	CN-1042F						CN-1027M
JP	Y	AVSS	1.25	CN-1027AF						
JP	Y	AVSS	1.25							CN-1027AF
JP	Y	AVSS	1.25	CN-1042AM						
JP	Y	AVSS	1.25							CN-1042AM

※1 IDENTIFICATION SYMBOL
※2 TWO WIRE CONNECT NUMBER

Reference Only

17. TRANSLIFTER

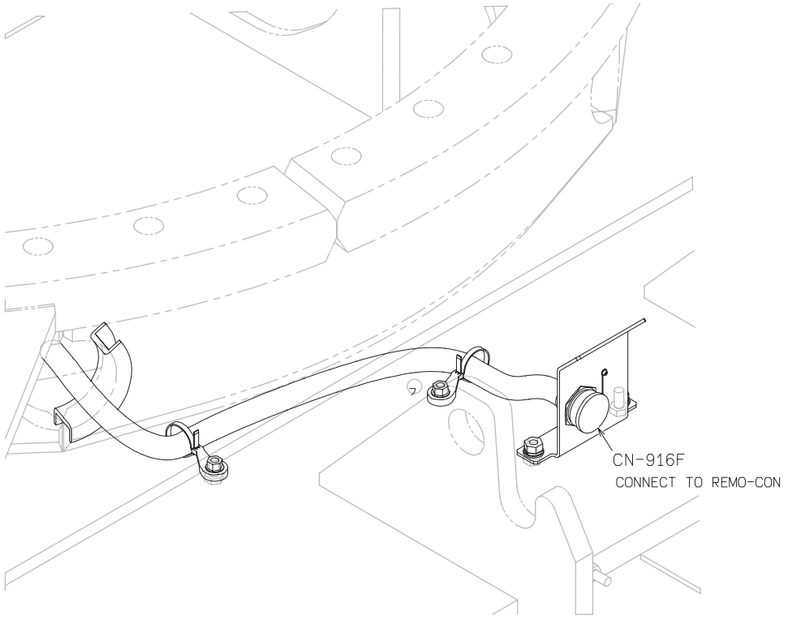

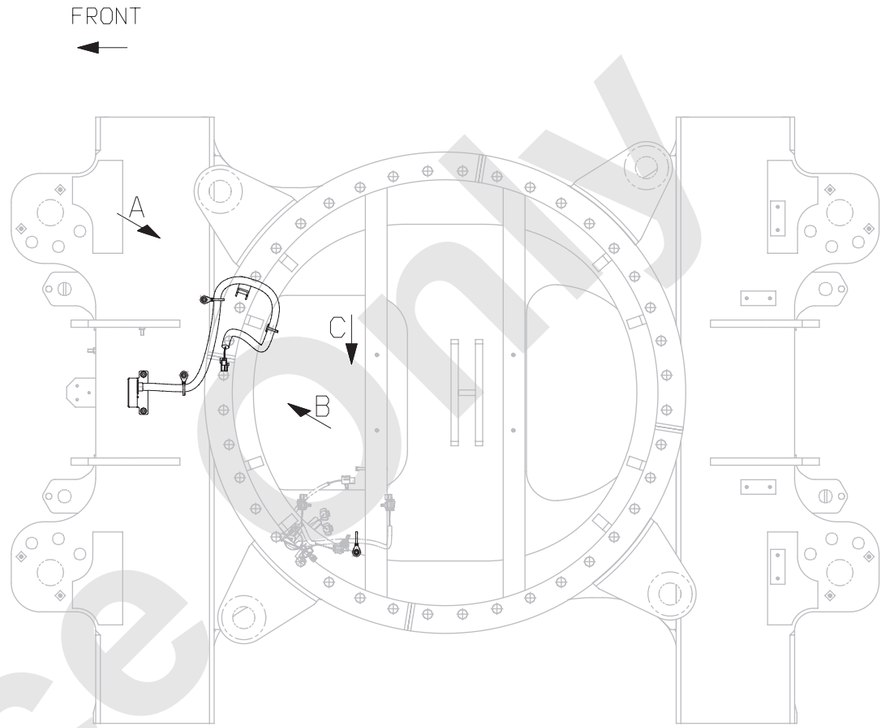

ARROW VIEW A

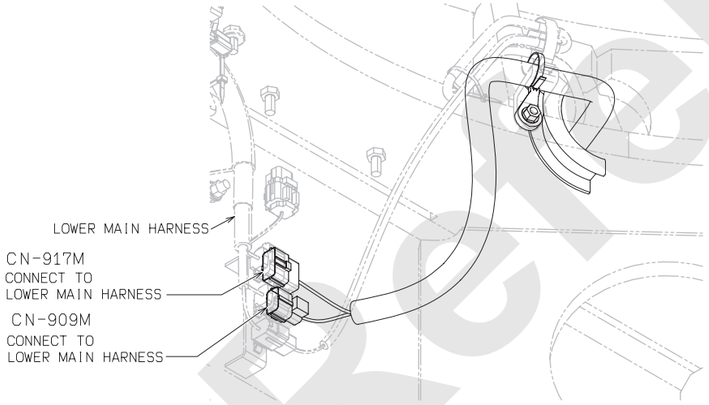

ARROW VIEW B

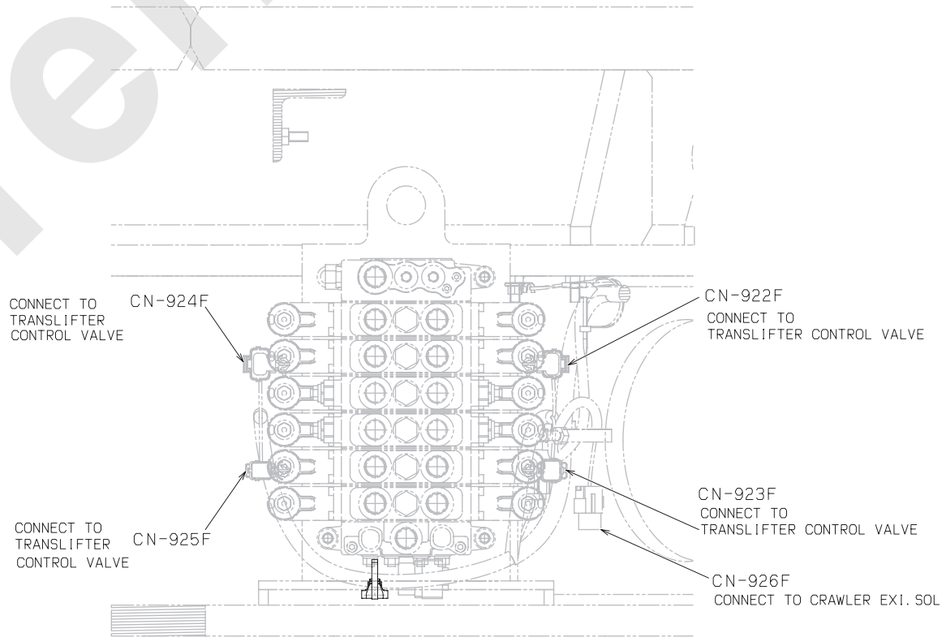

ARROW VIEW C

Reference only

TRANSLIFTER HARNESS

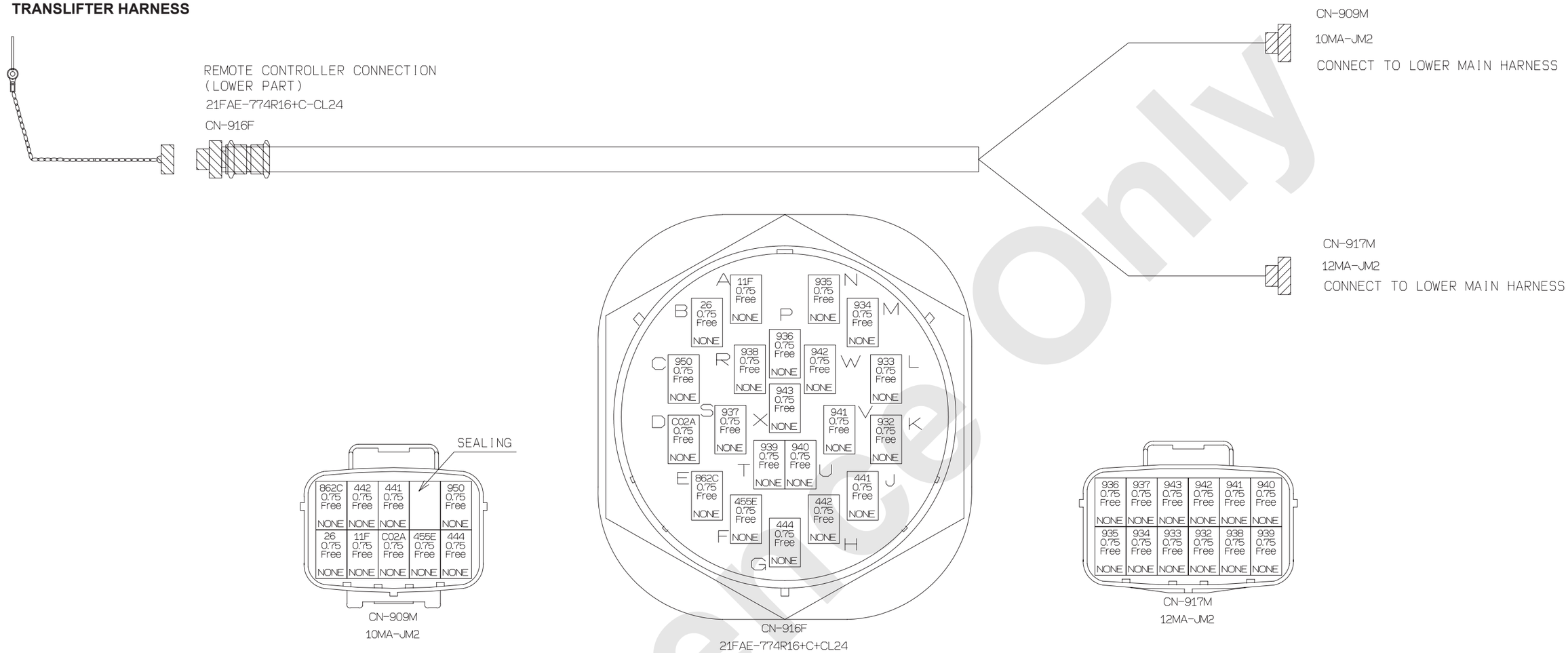

THE WIRE NO./COLOR LIST

WIRE NO.	WIRE COLOR	WIRE TYPE	SIZE	F R O M	※1	CONNECTION	※1	T O
11F	Free	2PNCT-SR	0.75	CN-909M		————		CN-916F
26	Free	2PNCT-SR	0.75	CN-909M		————		CN-916F
441	Free	2PNCT-SR	0.75	CN-909M		————		CN-916F
442	Free	2PNCT-SR	0.75	CN-909M		————		CN-916F
444	Free	2PNCT-SR	0.75	CN-909M		————		CN-916F
455E	Free	2PNCT-SR	0.75	CN-909M		————		CN-916F
862C	Free	2PNCT-SR	0.75	CN-909M		————		CN-916F
932	Free	2PNCT-SR	0.75	CN-917M		————		CN-916F
933	Free	2PNCT-SR	0.75	CN-917M		————		CN-916F
934	Free	2PNCT-SR	0.75	CN-917M		————		CN-916F
935	Free	2PNCT-SR	0.75	CN-917M		————		CN-916F
936	Free	2PNCT-SR	0.75	CN-917M		————		CN-916F
937	Free	2PNCT-SR	0.75	CN-917M		————		CN-916F
938	Free	2PNCT-SR	0.75	CN-917M		————		CN-916F
939	Free	2PNCT-SR	0.75	CN-917M		————		CN-916F
940	Free	2PNCT-SR	0.75	CN-917M		————		CN-916F
941	Free	2PNCT-SR	0.75	CN-917M		————		CN-916F
942	Free	2PNCT-SR	0.75	CN-917M		————		CN-916F
943	Free	2PNCT-SR	0.75	CN-917M		————		CN-916F
950	Free	2PNCT-SR	0.75	CN-909M		————		CN-916F
C02A	Free	2PNCT-SR	0.75	CN-909M		————		CN-916F

Reference Only

18. HOIST DRUM TURN SENSOR

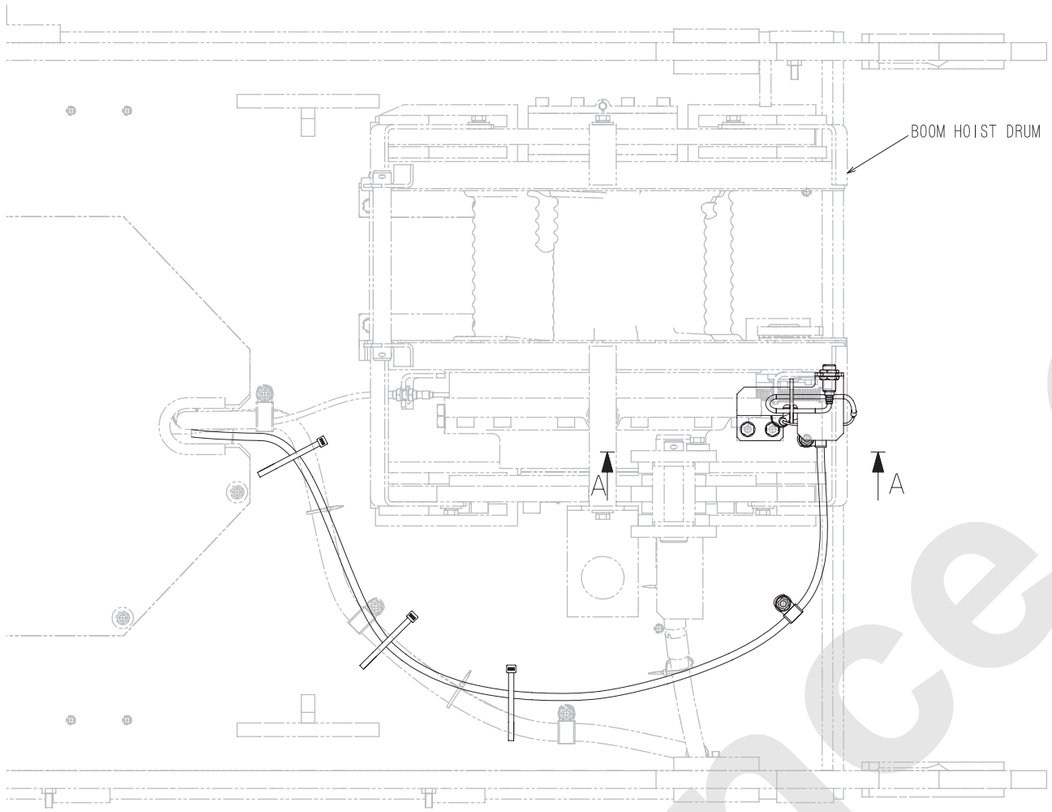

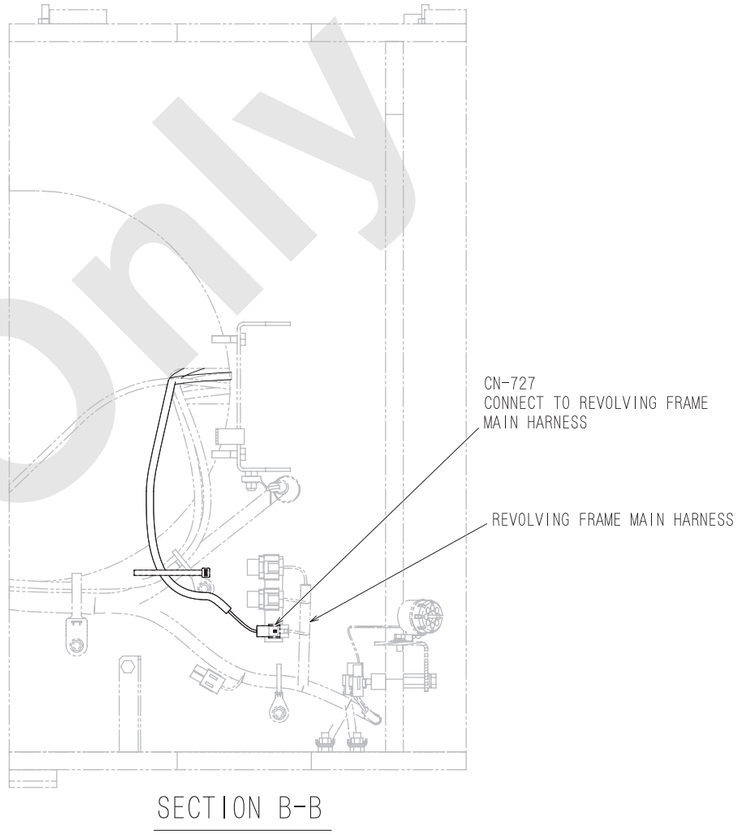

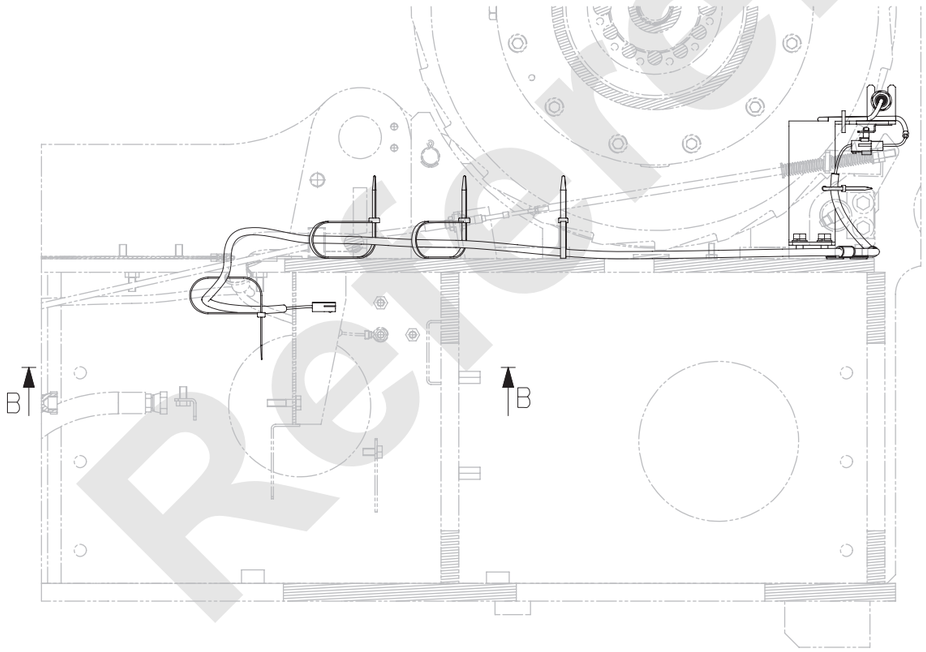

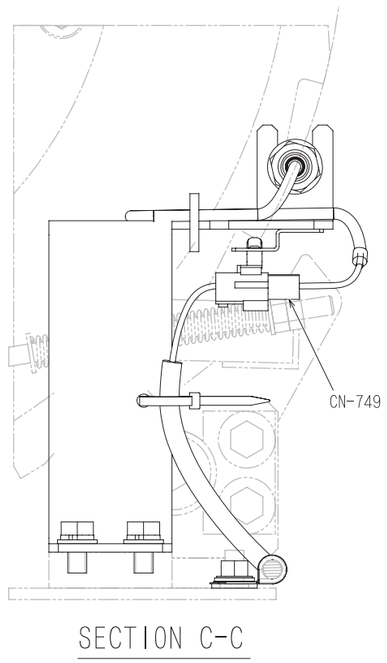

Reference Only

(1/2)

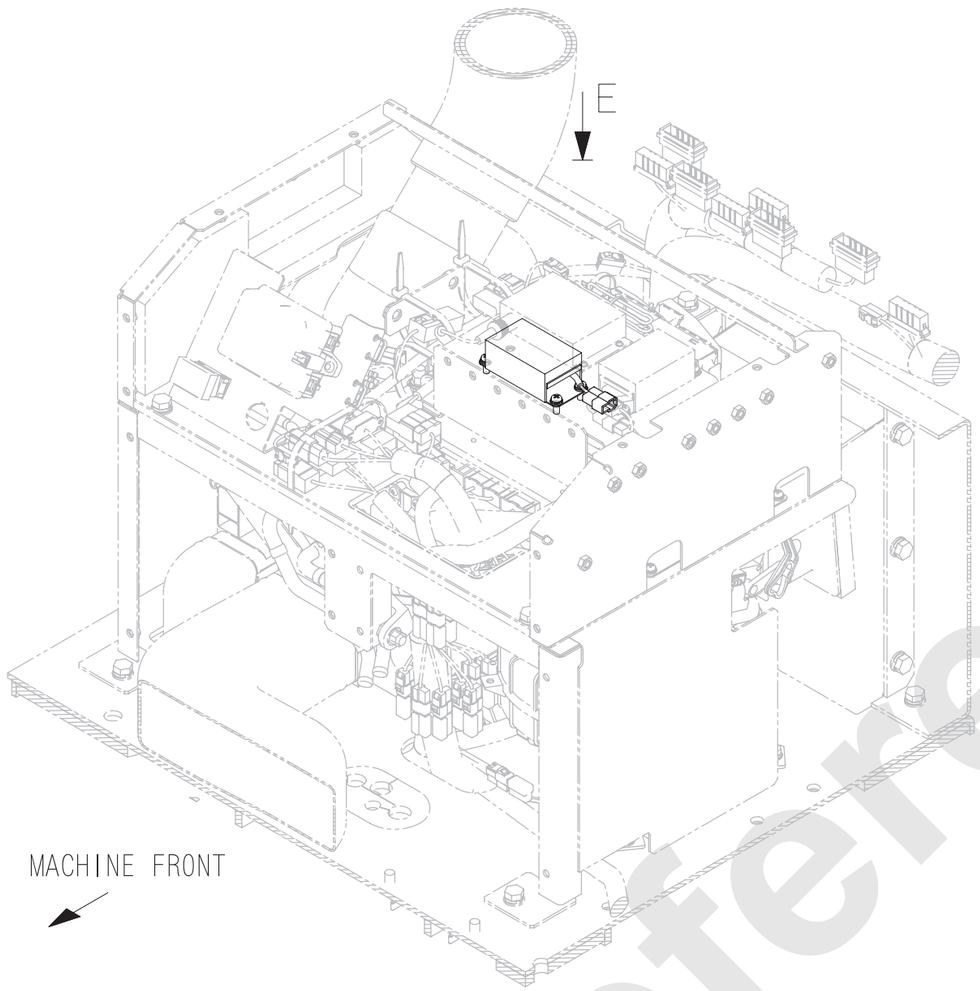

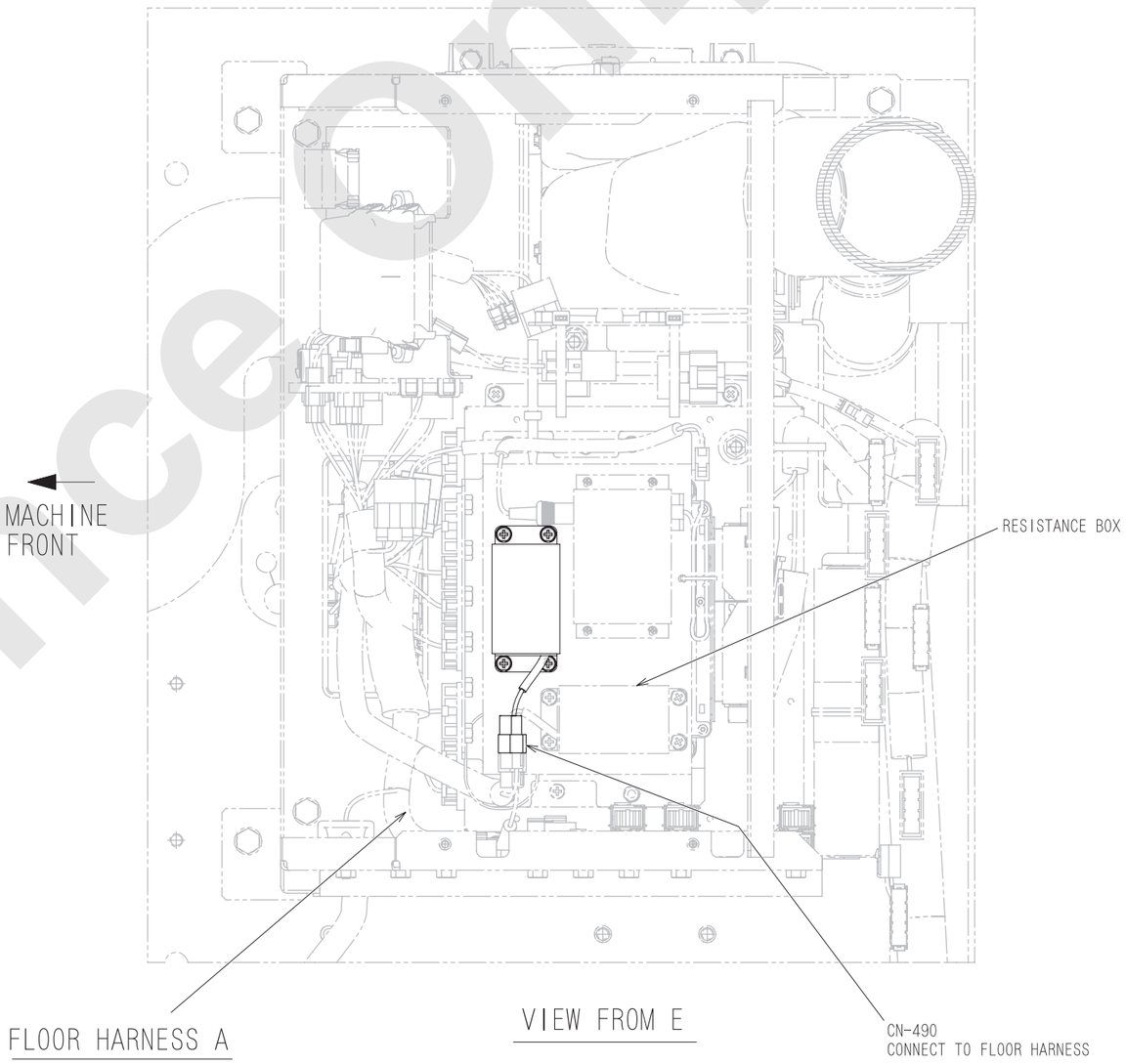

Reference Only

(2/2)

HOIST DRUM TURN SENSOR HARNESS

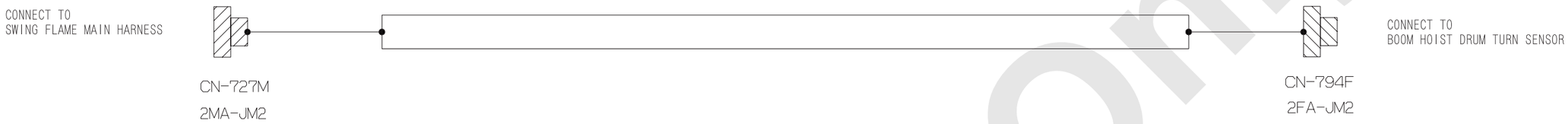

CN-727M
2MA-JM2

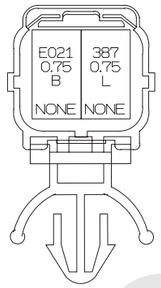

CN-794F
2FA-JM2

THE WIRE NO./COLOR LIST

※1 TWO WIRE CONNECT NUMBER

WIRE NO.	WIRE COLOR	WIRE TYPE	SIZE	F R O M	※1	CONNECTION	※1	T O
387	L	AVSS	0.75	CN-727M		————		CN-794F
E021	B	AVSS	0.75	CN-727M		————		CN-794F

Reference Only

19. THIRD DRUM TURN SENSOR

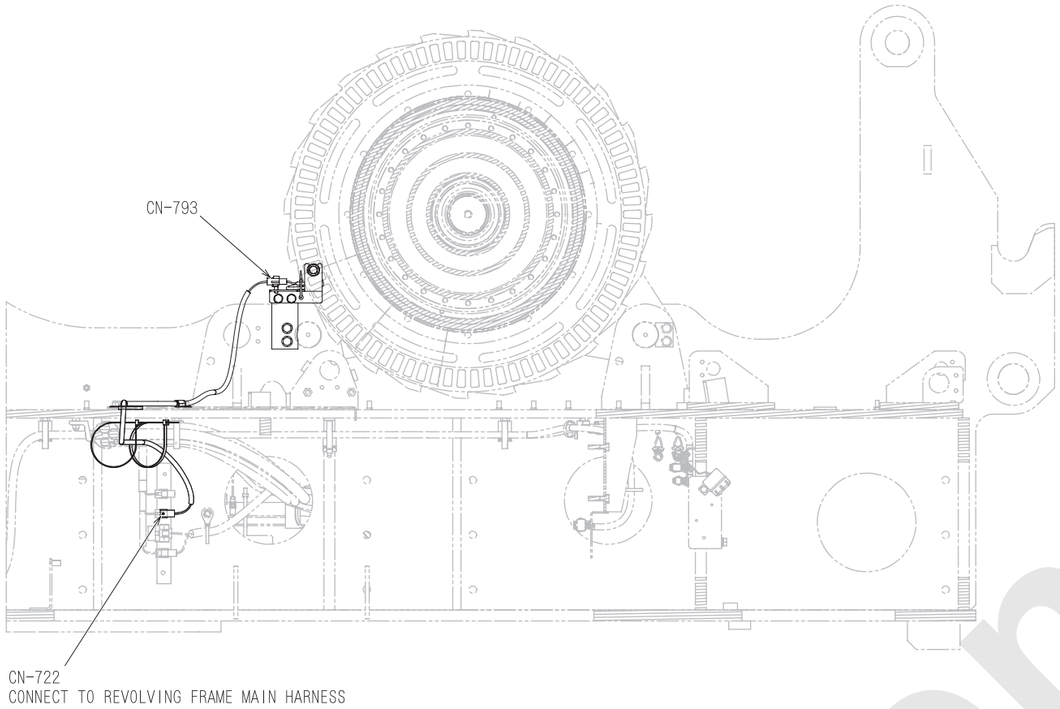

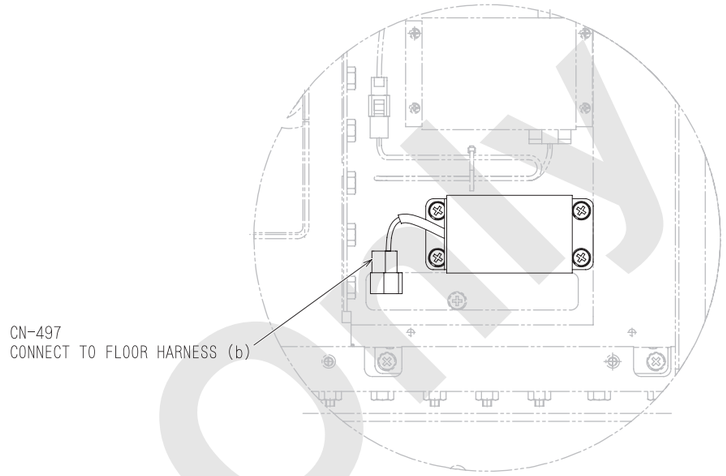

FROM E

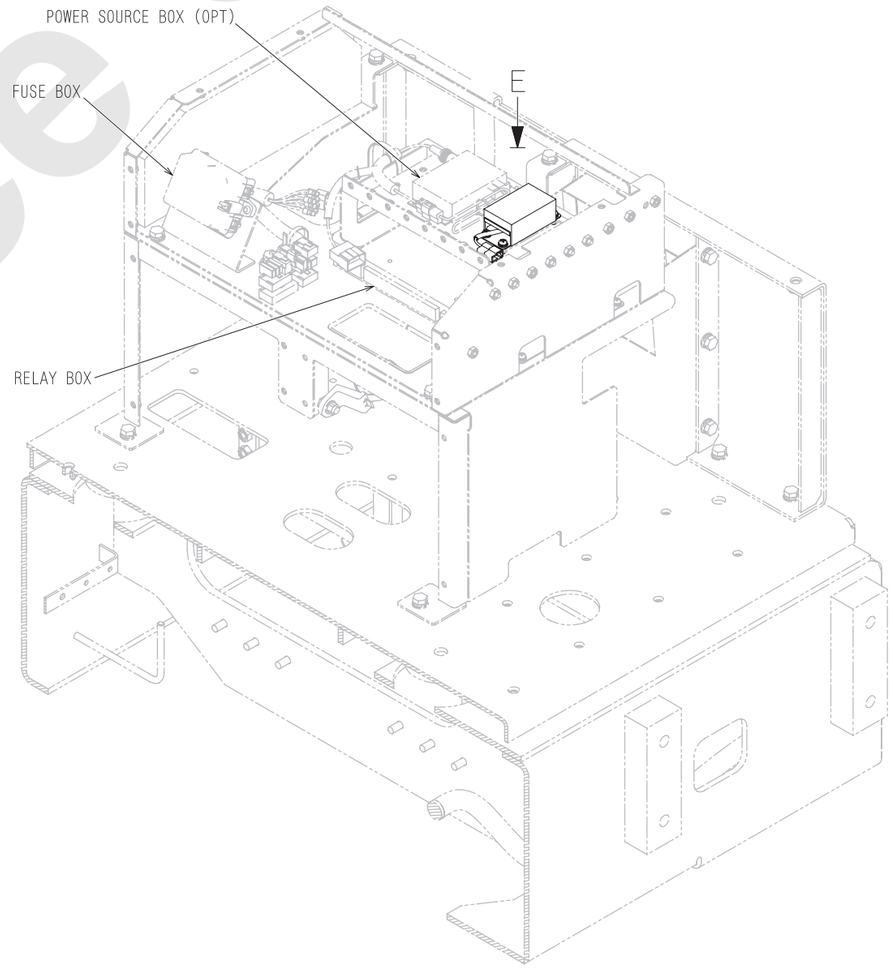

SWICH BOARD DIAGONAL VIEW FROM LEFT FRONT OF CAB

Reference Only

THIRD DRUM TURN SENSOR HARNESS

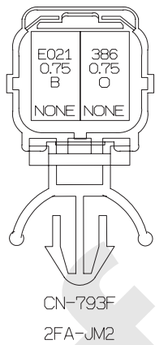

THE WIRE NO./COLOR LIST

WIRE NO.	WIRE COLOR	WIRE TYPE	SIZE	F R O M	※1	CONNECTION	※1	T O
386	O	AVSS	0.75	CN-722M		————		CN-793F
E021	B	AVSS	0.75	CN-722M		————		CN-793F

※1 TWO WIRE CONNECT NUMBER

Reference Only

20. DEF/AdBlue® TANK

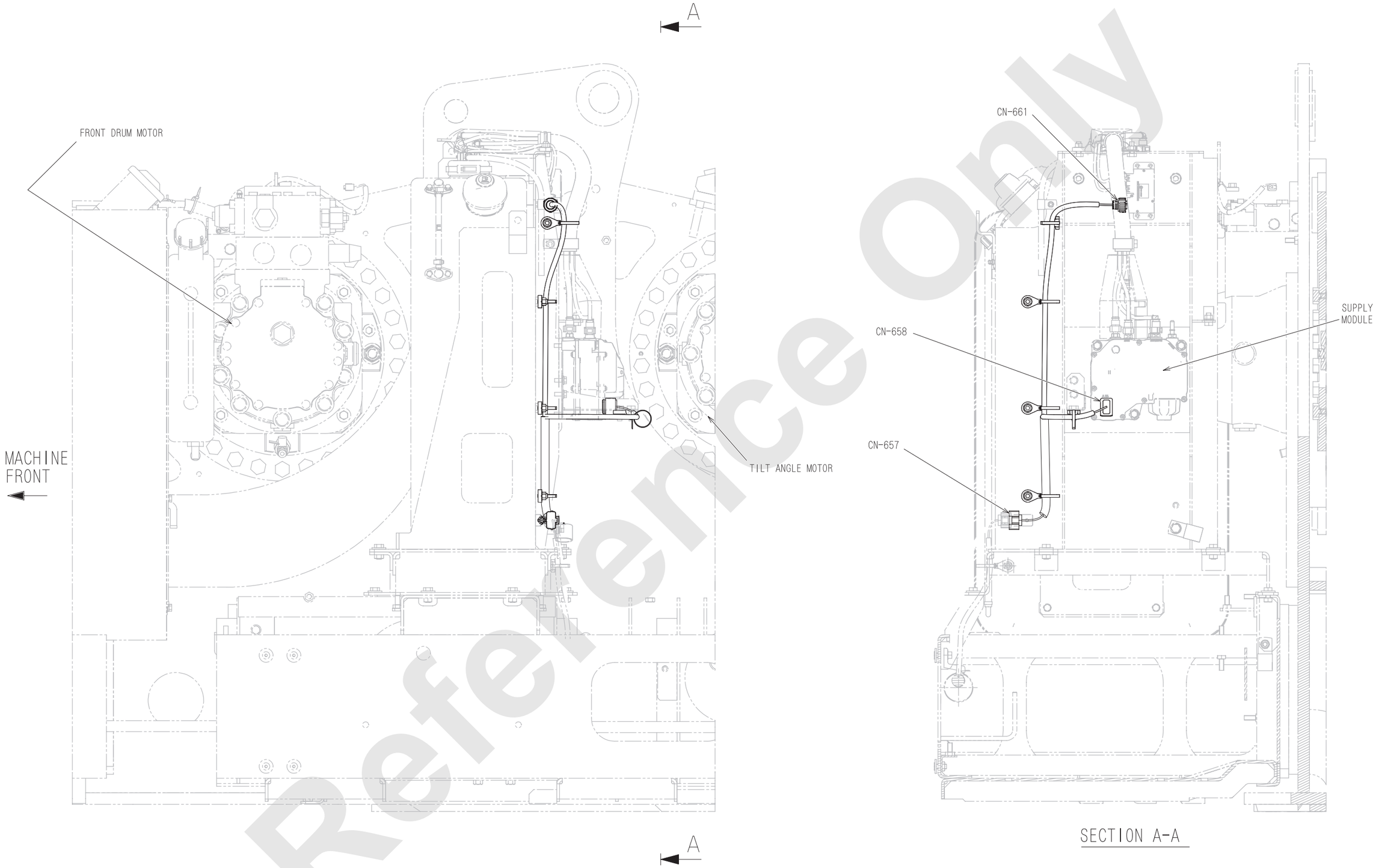

Reference Only

DEF/AdBlue® TANK HARNESS

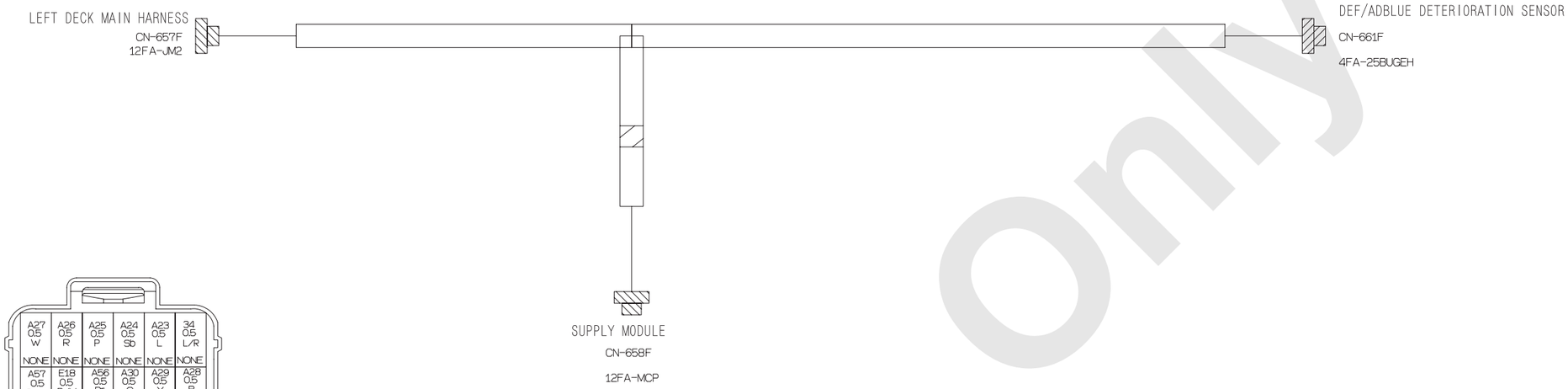

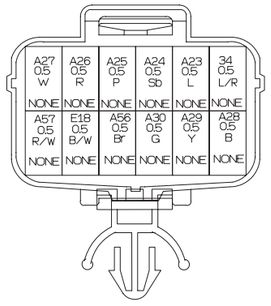

CN-657F
12FA-JM2

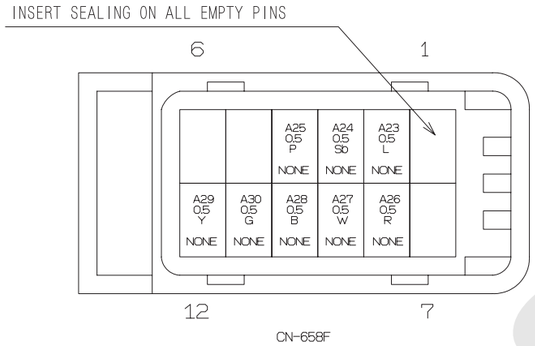

CN-658F
12FA-MCP

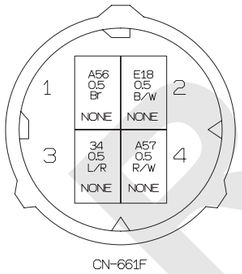

CN-661F
4FA-25BUGEH

THE WIRE NO./COLOR LIST

※1 IDENTIFICATION SYMBOL
※2 TWO WIRE CONNECT NUMBER

WIRE NO.	WIRE COLOR	WIRE TYPE	SIZE	FROM	※1	※2	CONNECTION	※2	※1	TO
34	L/R	AVSS	0.5	CN-661F			————			CN-657F
A23	L	AVSS	0.5	CN-658F			————			CN-657F
A24	Sb	AVSS	0.5	CN-658F			————			CN-657F
A25	P	AVSS	0.5	CN-658F			————			CN-657F
A26	R	AVSS	0.5	CN-658F			————			CN-657F
A27	W	AVSS	0.5	CN-658F			————			CN-657F
A28	B	AVSS	0.5	CN-658F			————			CN-657F
A29	Y	AVSS	0.5	CN-658F			————			CN-657F
A30	G	AVSS	0.5	CN-658F			————			CN-657F
A56	Br	AVSS	0.5	CN-661F			——XXXX——			CN-657F
A57	R/W	AVSS	0.5	CN-661F						CN-657F
E18	B/W	AVSS	0.5	CN-661F			————			CN-657F

Reference Only

21. CAMERA CONTROLLER

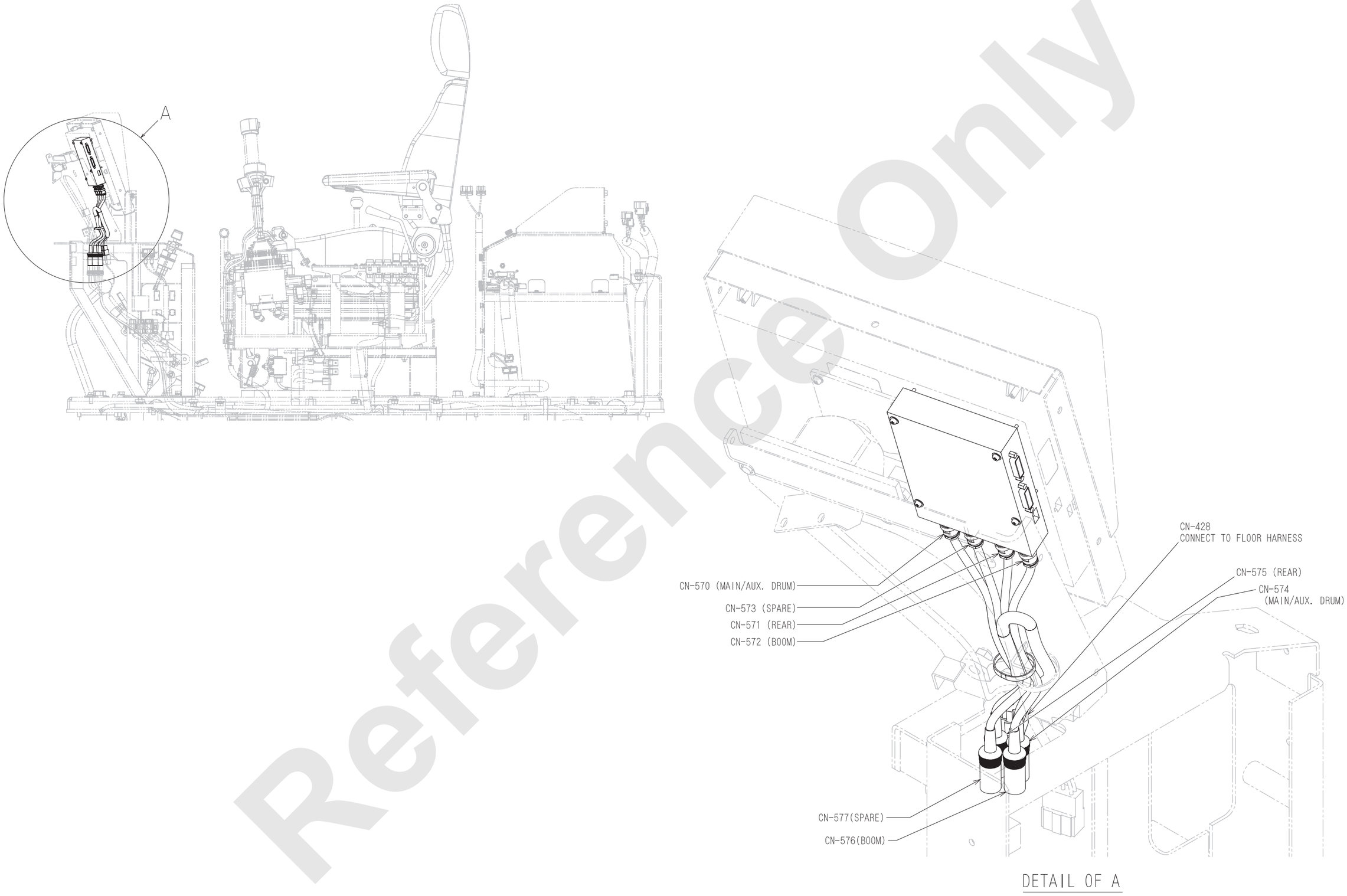

Reference Only

(1/2)

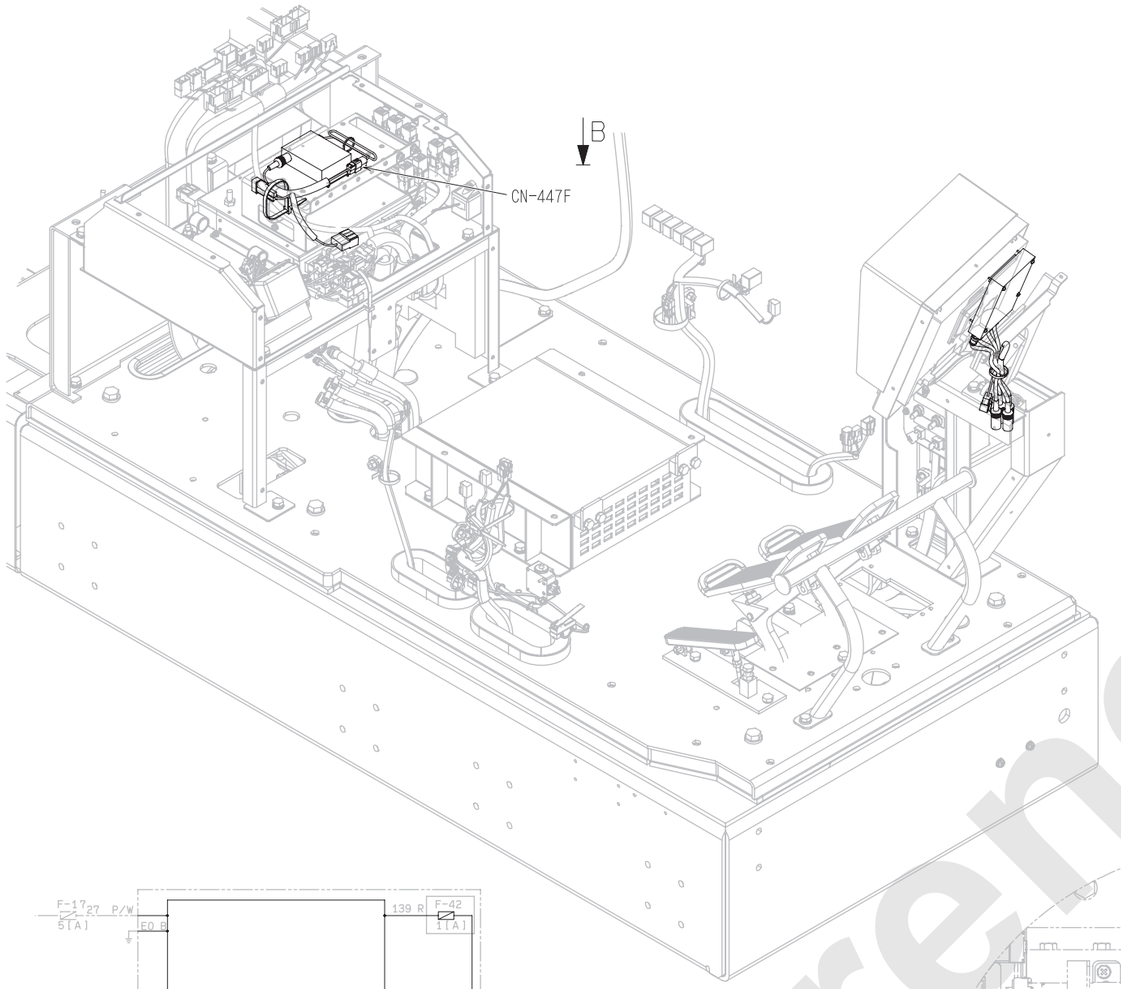

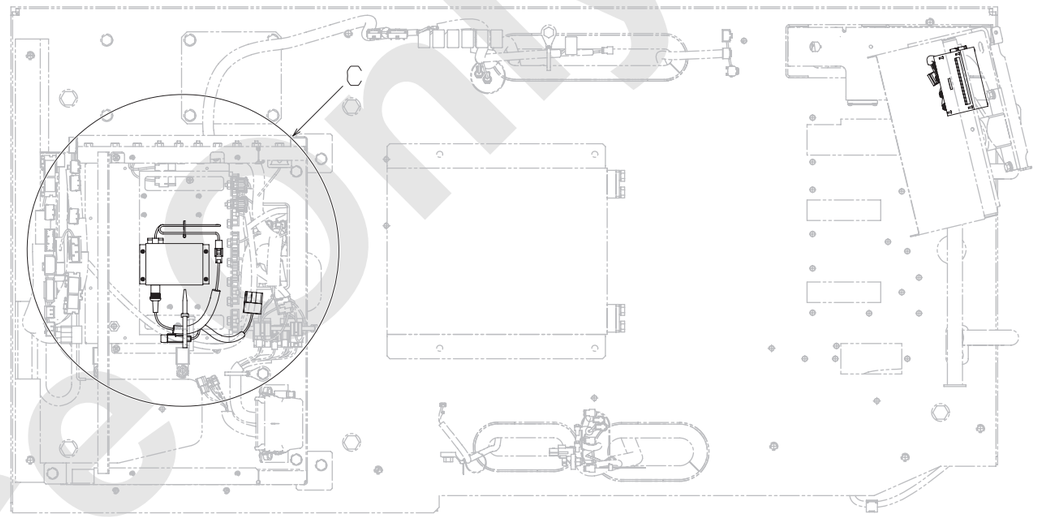

VIEW FROM B

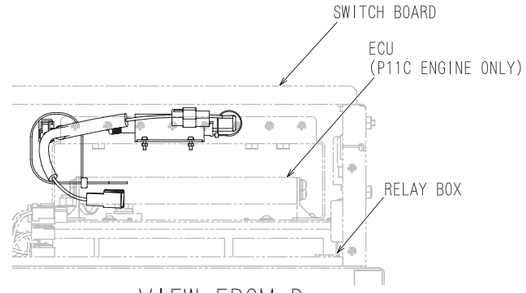

VIEW FROM D

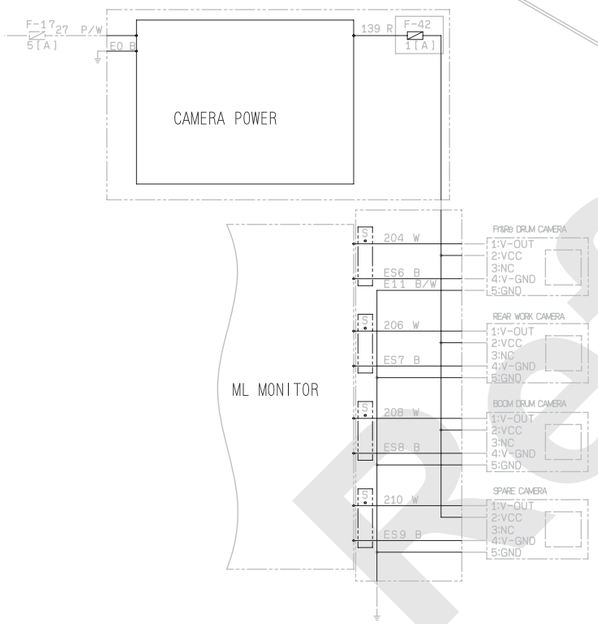

ELECTRICITY CIRCUIT

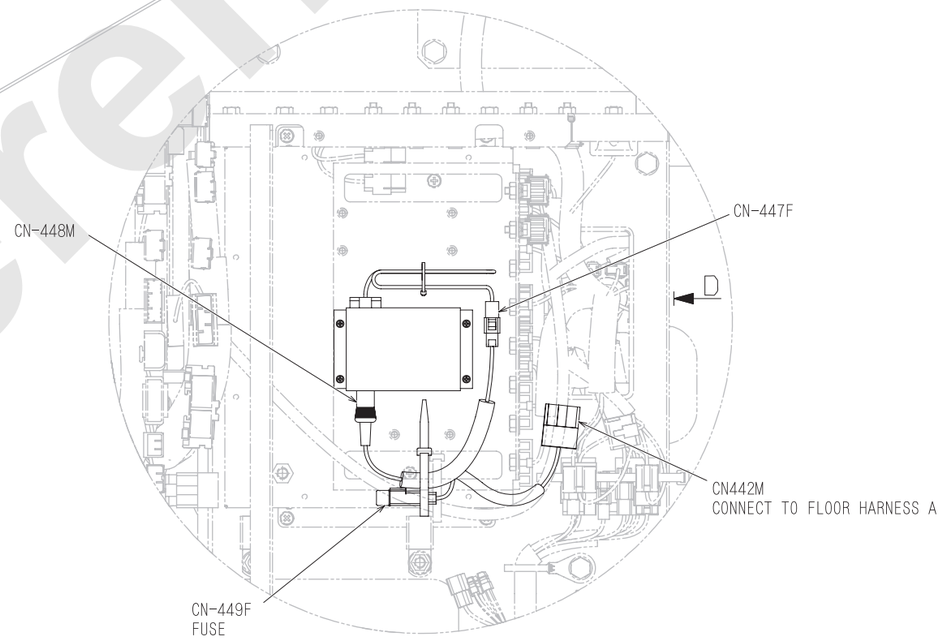

DETAIL OF C

Reference only

(2/2)

CAMERA CONTROLLER HARNESS (a)

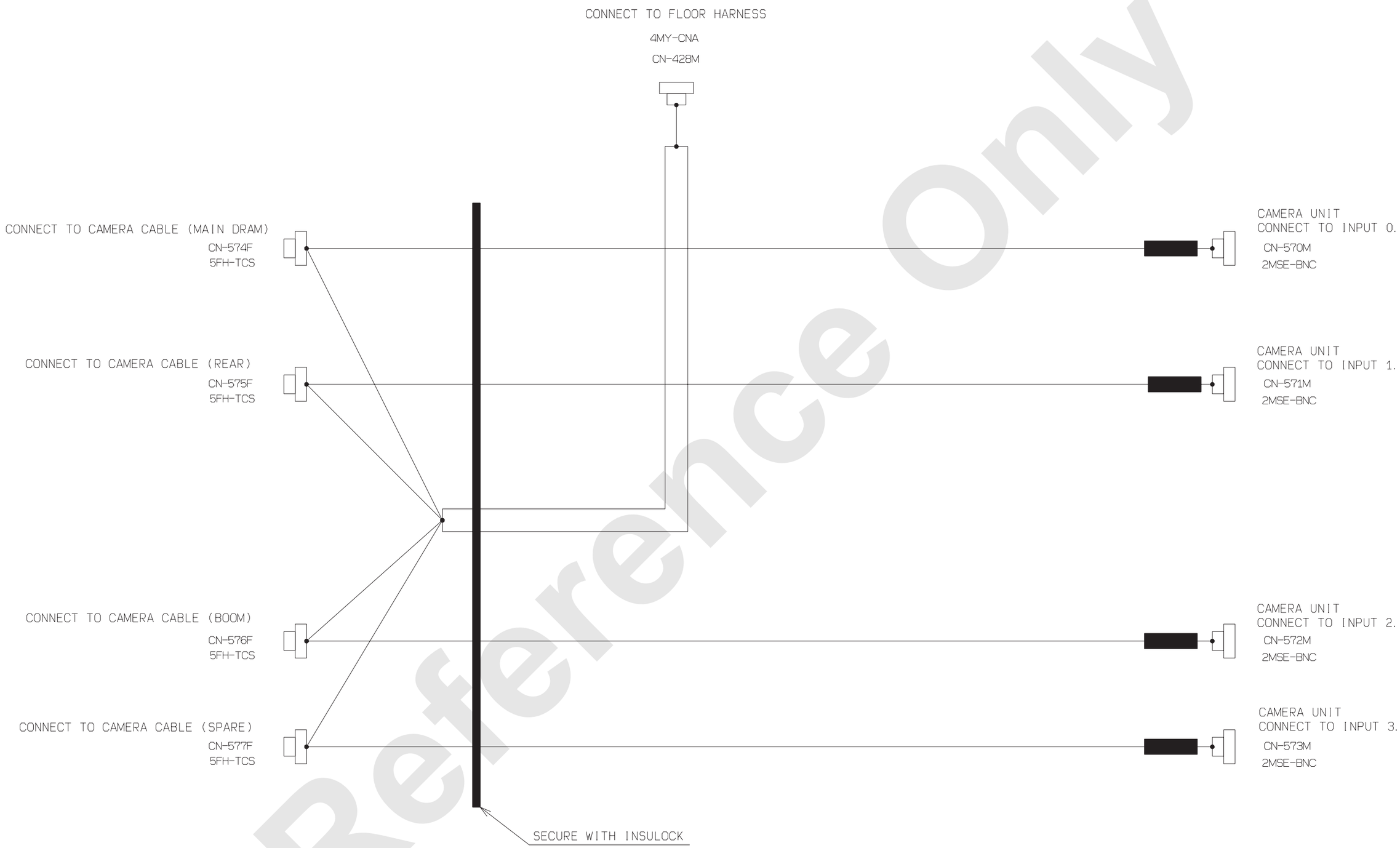

Reference Only

(1/2)

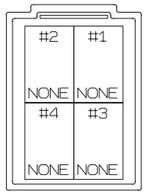

CN-428M

4MY-CNA

#1 140C 0.3 Y + 140E 0.3 Y
#2 139E 0.3 G + 139F 0.3 G
#3 140F 0.3 Y + 140G 0.3 Y
#4 139G 0.3 G + 139H 0.3 G

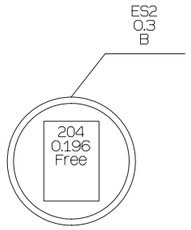

CN-570M

2MSE-BNC

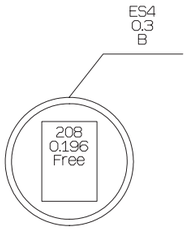

CN-572M

2MSE-BNC

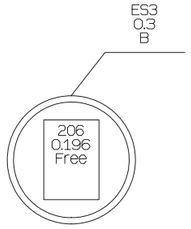

CN-571M

2MSE-BNC

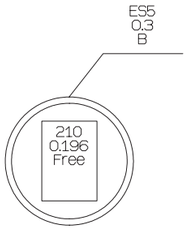

CN-573M

2MSE-BNC

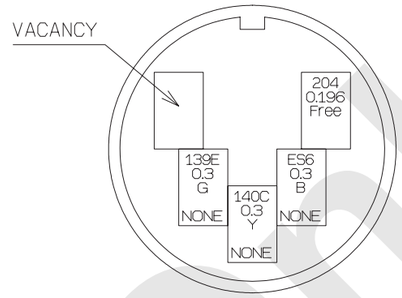

CN-574F

5FH-TCS

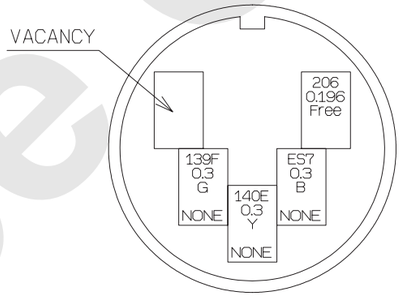

CN-575F

5FH-TCS

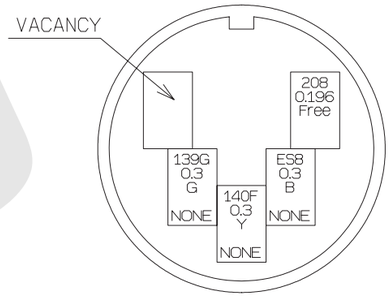

CN-576F

5FH-TCS

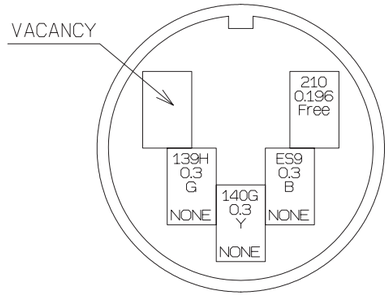

CN-577F

5FH-TCS

THE WIRE NO./COLOR LIST

※1	※2	※3	※4	F R O M	※5	※6	※7	※8	※7 ●	※6	※5	T O	※9
139E	G	AVSS	0.3	CN-428M	2		DS-B92		●		5	CN-574F	300
139F	G	AVSS	0.3	CN-428M	2		DS-B92				5	CN-575F	300
139G	G	AVSS	0.3	CN-428M	4		DS-B94		●		5	CN-576F	300
139H	G	AVSS	0.3	CN-428M	4		DS-B94				5	CN-577F	300
140C	Y	AVSS	0.3	CN-428M	1		DS-B90		●		2	CN-574F	300
140E	Y	AVSS	0.3	CN-428M	1		DS-B90				2	CN-575F	300
140F	Y	AVSS	0.3	CN-428M	3		DS-B93				2	CN-576F	300
140G	Y	AVSS	0.3	CN-428M	3		DS-B93				2	CN-577F	300
204	Free	3C-2W	0.196	CN-574F	1						1	CN-570M	200
ES2	B	AVSS	0.3	(CN-574F)							2	CN-570M	100
ES6	B	AVSS	0.3	CN-574F	4							(CN-570M)	100
206	Free	3C-2W	0.196	CN-575F	1						1	CN-571M	200
ES3	B	AVSS	0.3	(CN-575F)							2	CN-571M	100
ES7	B	AVSS	0.3	CN-575F	4							(CN-571M)	100
208	Free	3C-2W	0.196	CN-576F	1						1	CN-572M	200
ES4	B	AVSS	0.3	(CN-576F)							2	CN-572M	100
ES8	B	AVSS	0.3	CN-576F	4							(CN-572M)	100
210	Free	3C-2W	0.196	CN-577F	1						1	CN-573M	200
ES5	B	AVSS	0.3	(CN-577F)							2	CN-573M	100
ES9	B	AVSS	0.3	CN-577F	4							(CN-573M)	100

※1 WIRE NO.
※2 WIRE COLOR
※3 WIRE TYPE
※4 SIZE
※5 PIN NUMBER
※6 IDENTIFICATION SYMBOL
※7 TWO WIRE CONNECT NO.
※8 CONNECTION
※9 LENGTH(DESIGN VALUE)

Reference Only

(2/2)

CAMERA CONTROLLER HARNESS (b)

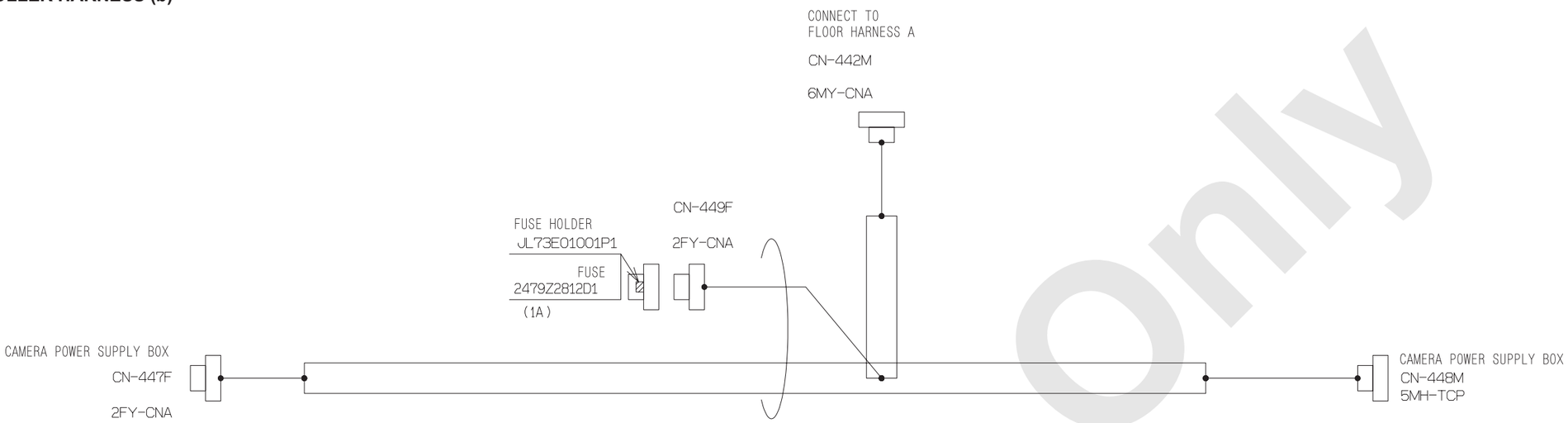

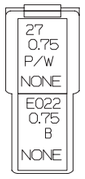

CN-447F
2FY-CNA

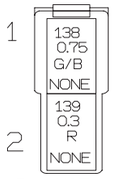

CN-449F
2FY-CNA

THE WIRE NO./COLOR LIST

※1 IDENTIFICATION SYMBOL
※2 TWO WIRE CONNECT NUMBER

WIRE NO.	WIRE COLOR	WIRE TYPE	SIZE	F R O M	※1	※2	CONNECTION	※2	※1	T O
27	P/W	AVSS	0.75	CN-442M						CN-447F
138	G/B	AVSS	0.75	CN-442M						CN-442M
138	G/B	AVSS	0.75	CN-449F						CN-442M
139	R	AVS	0.3	CN-449F						CN-448M
E022	B	AVSS	0.75	CN-447F						CN-442M

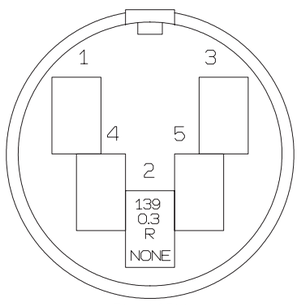

CN-448M
5MH-TCP

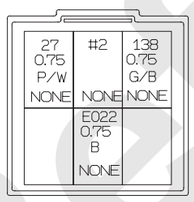

CN-442M
6MY-CNA
#2 138 0.75 G/B+138 0.75 G/B

Reference Only

22. DRUM LIGHT INSTAL

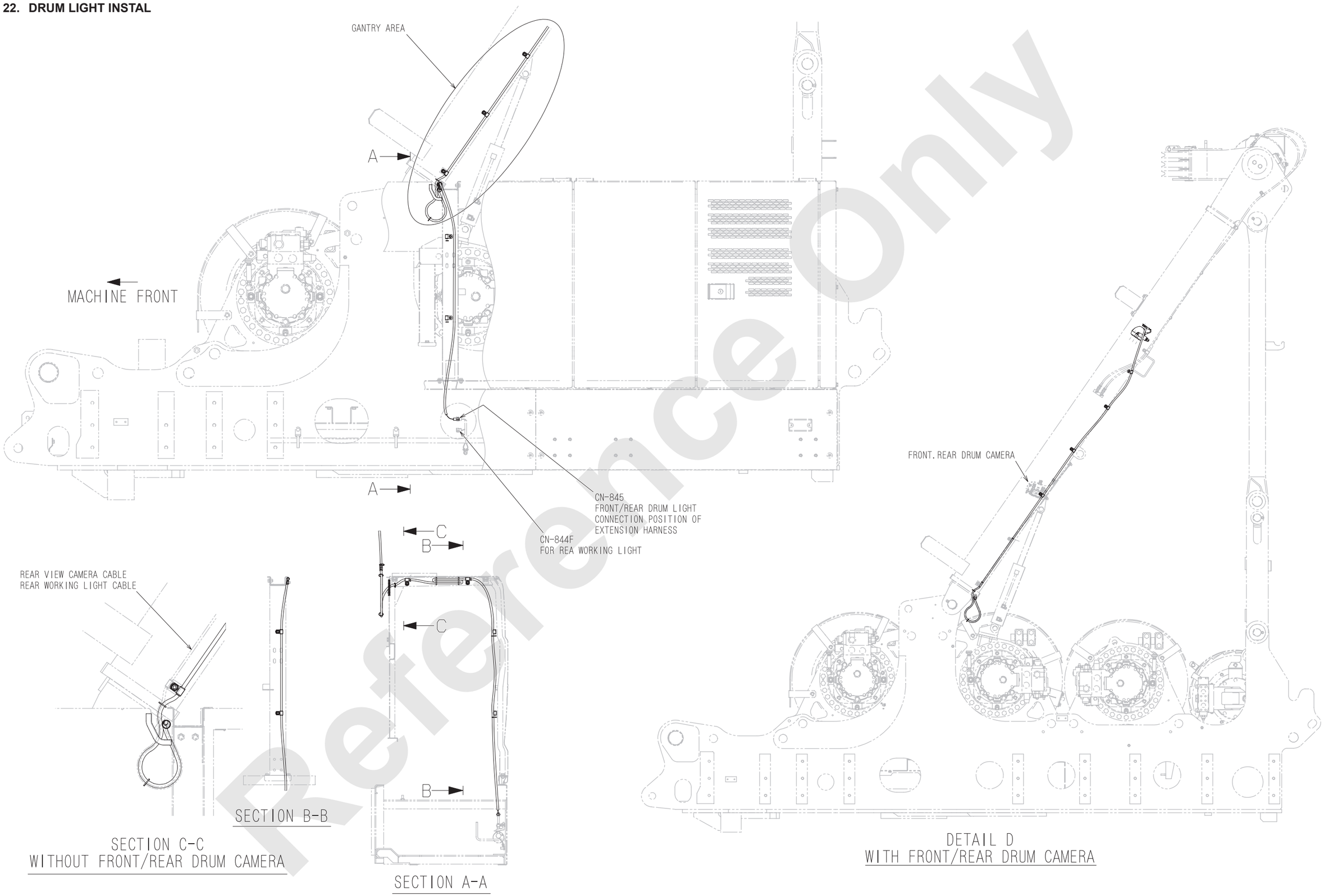

Reference Only

DRUM LIGHT INSTAL HARNESS

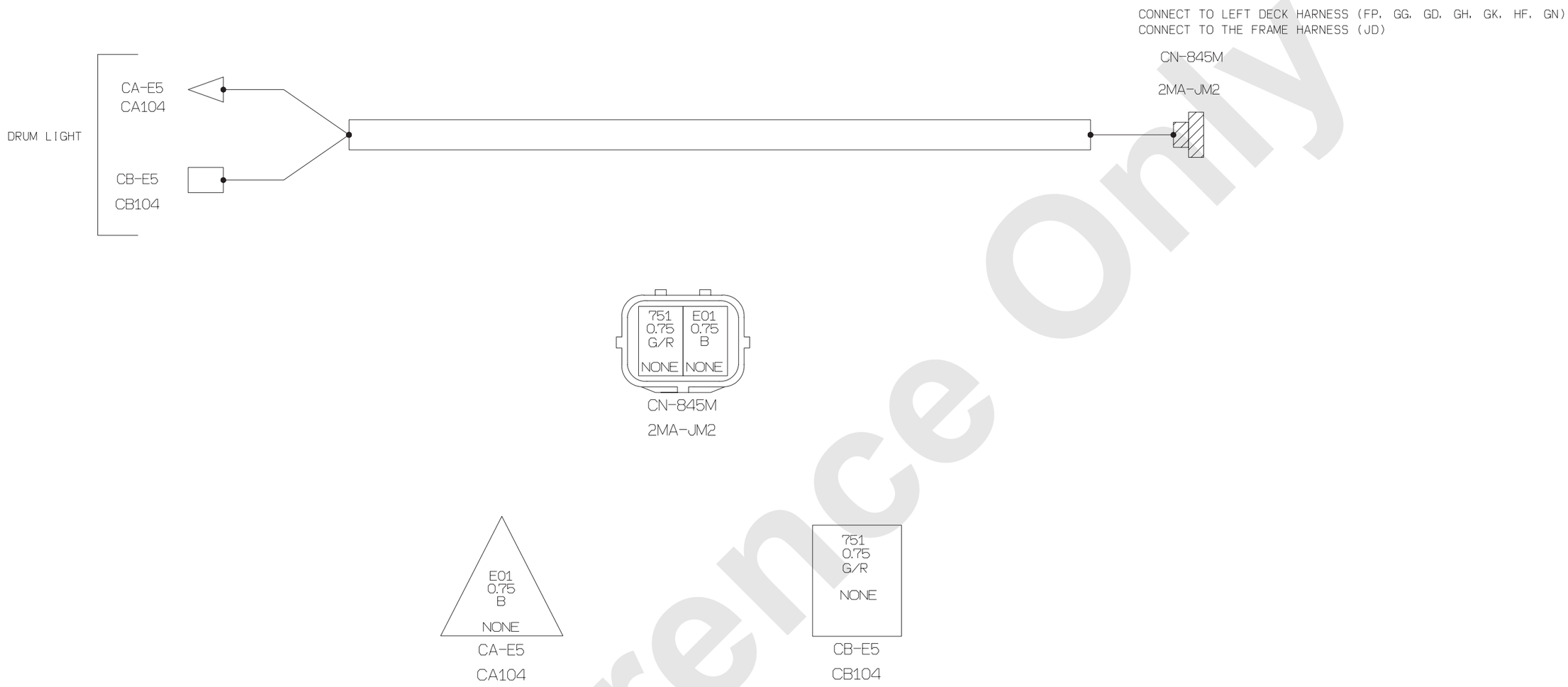

THE WIRE NO./COLOR LIST

※1 IDENTIFICATION SYMBOL
※2 TWO WIRE CONNECT NUMBER

WIRE NO.	WIRE COLOR	WIRE TYPE	SIZE	F R O M	PIN NUMBER	※1	※2	CONNECTION	※2	※1	PIN NUMBER	T O
751	G/R	AVSS	0.75	CB-E5	2			————			2	CN-845M
E01	B	AVSS	0.75	CN-845M	1			————			1	CA-E5

Reference Only

23. BACK LIGHT INSTAL (GG80E00012F2)

BACK LIGHT INSTAL HARNESS

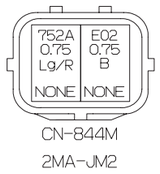

THE WIRE NO. /COLOR LIST

※1 IDENTIFICATION SYMBOL
※2 TWO WIRE CONNECT NUMBER

WIRE NO.	WIRE COLOR	WIRE TYPE	SIZE	F R O M	PIN NUMBER	※1	※2	CONNECTION	※2	※1	PIN NUMBER	T O
752A	Lg/R	AVSS	0.75	CB-E6	2			————			2	CN-844M
E02	B	AVSS	0.75	CA-E6	1			————			1	CN-844M

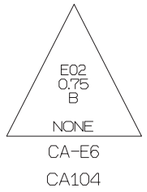

Reference Only

24. IT CONTROLLER INSTALLATION

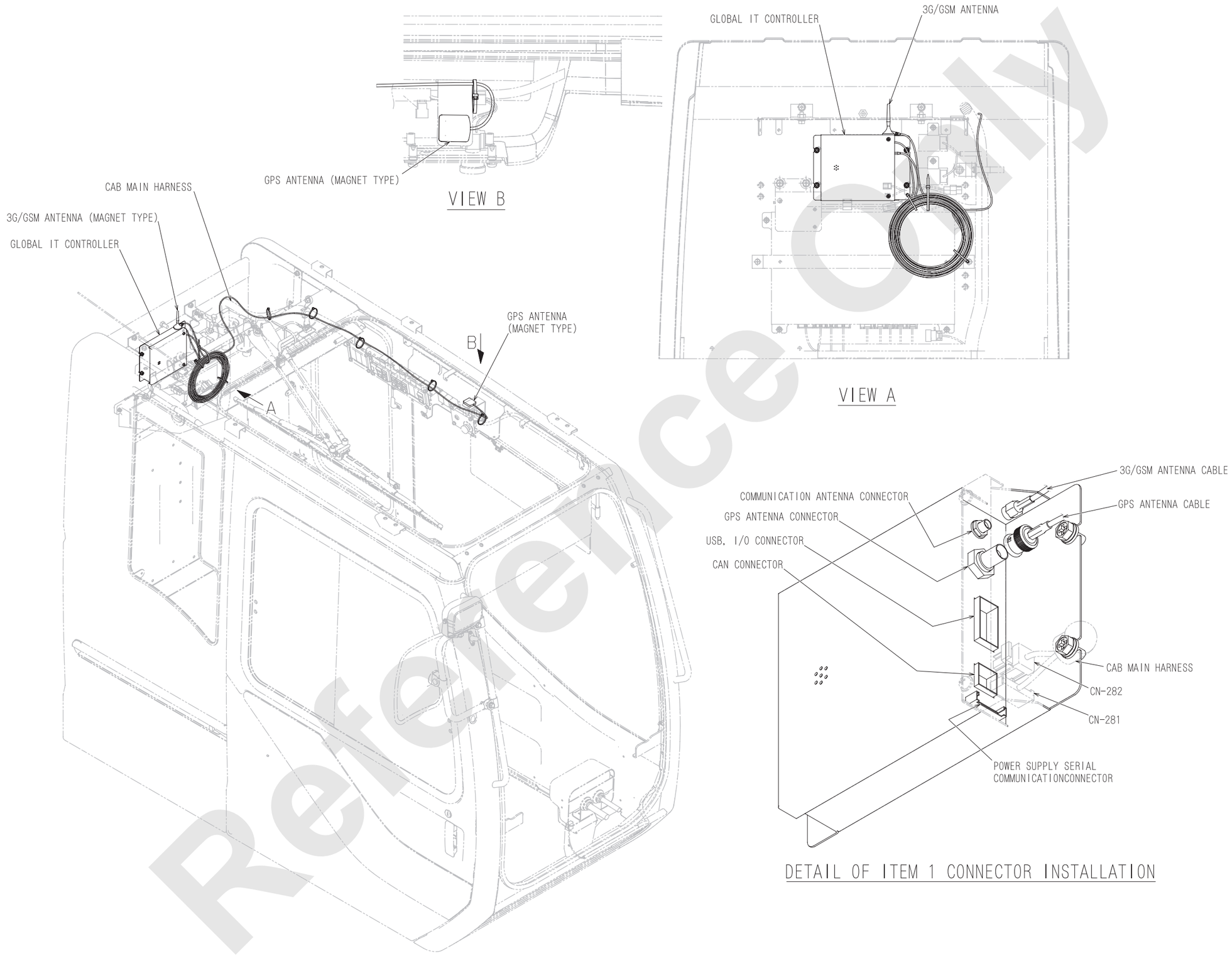

Reference Only

This page is blank for editing convenience.

Reference Only

10.1.3 LOCATION AND USE OF FUSE

While lifting two locks on the side face of the fuse box, open the cover.
Cover will not open unless the locks are completely unlocked.

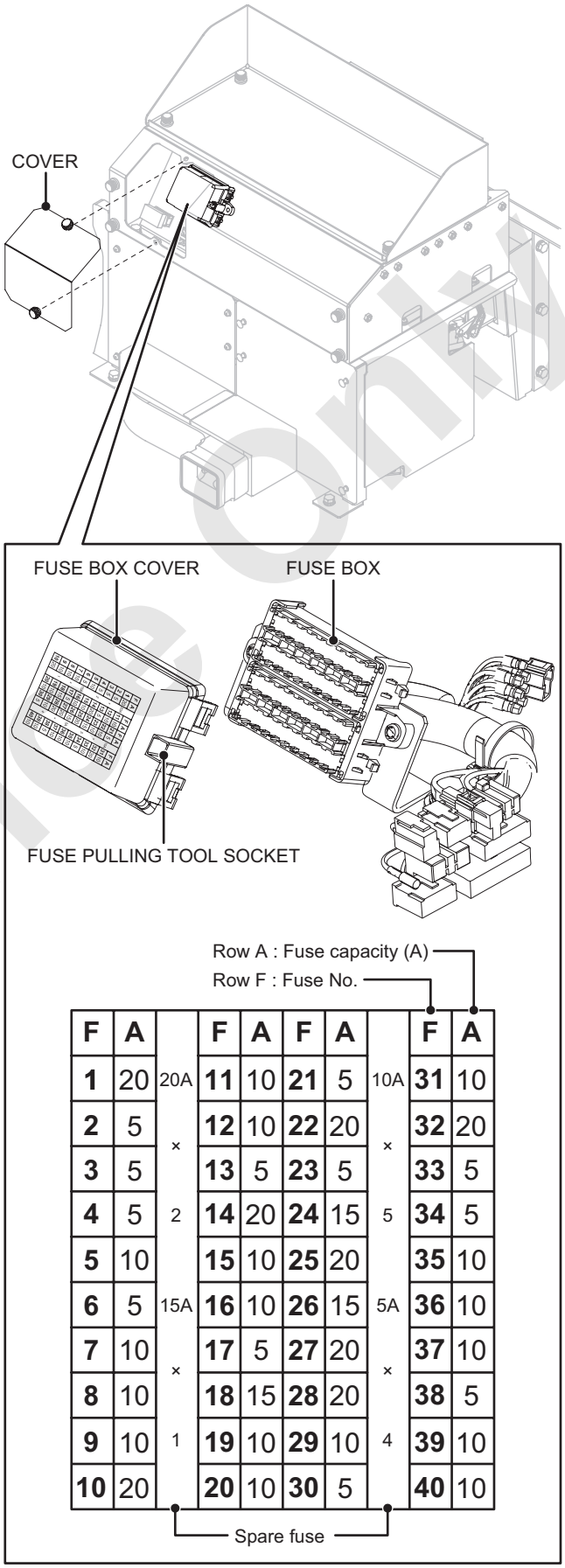

F	A		F	A	F	A		F	A
1	20	20A	11	10	21	5	10A	31	10
2	5	×	12	10	22	20	×	32	20
3	5		13	5	23	5		33	5
4	5	2	14	20	24	15	5	34	5
5	10		15	10	25	20		35	10
6	5	15A	16	10	26	15	5A	36	10
7	10	×	17	5	27	20	×	37	10
8	10		18	15	28	20		38	5
9	10	1	19	10	29	10	4	39	10
10	20		20	10	30	5		40	10

Reference Only

CLASSIFICATION OF FUSE USE

Fuse No.	Capacity	Line No.	Use
F1	20A	1A - 11	Main power supply, Work light
F2	5A	4-12	Sub battery voltage monitor
F3	5A	1B - 13	IT controller
F4	5A	1B - 14	Back-up (M/L, MC1, MC2, Radio)
F5	10A	2F - 15	Bypass circuit
F6	5A	2F - 16	Release circuit
F7	10A	2F - 17	Control power (M/L)
F8	10A	2F - 18	Output power (M/L)
F9	10A	2F - 19	Control power (MC1)
F10	20A	2F - 20	Output power (MC1)
F11	10A	2F - 21	Auto-stop
F12	10A	2F - 22	Engine condition
F13	5A	84 - 23	Radio, One-way call
F14	20A	2G - 24	Wiper
F15	10A	2G - 25	Function lock
F16	10A	2G - 26	Remo-con
F17	5A	2G - 27	Monitor
F18	15A	2E - 28	Air conditioner
F19	10A	2E - 29	Air conditioner 2
F20	10A	2E - 30	Fun motor
F21	5A	51 - 31	Generation detect
F22	20A	IC - 32	DCU
F23	5A	IE - 33	ECU (BATT)
F24	15A	2J - 34	ECU (+BF)
F25	20A	2J - 35	ECU (+B)
F26	15A	2J - 36	Spare
F27	20A	2I - 37	DC motor 1 for oil cooler
F28	20A	2I - 38	DC motor 2 for oil cooler
F29	10A	2I - 39	Swing flasher, Voice alarm
F30	5A	54 - 40	Starter
F31	10A	2H - 41	Control power (MC2)
F32	20A	2H - 42	Output power (MC2)
F33	5A	2H - 43	Solenoid valve (Confluence/independent)
F34	5A	2H - 44	Overhoist limit switch
F35	10A	2H - 45	Fuel pump, Cigarette lighter
F36	10A	2K - 46	Relay
F37	10A	2K - 47	Relay
F38	5A	2K - 48	Free fall
F39	10A	2K - 49	Light
F40	10A	2K -	Spare

Reference Only

DANGER

- **Ensure to turn key switch OFF when replacing fuse.**
- **Replace the fuse with the same capacity.**
- **If fuse blows off right after replaced, there is some abnormality in the electric circuit. Find out a cause and take necessary action.**

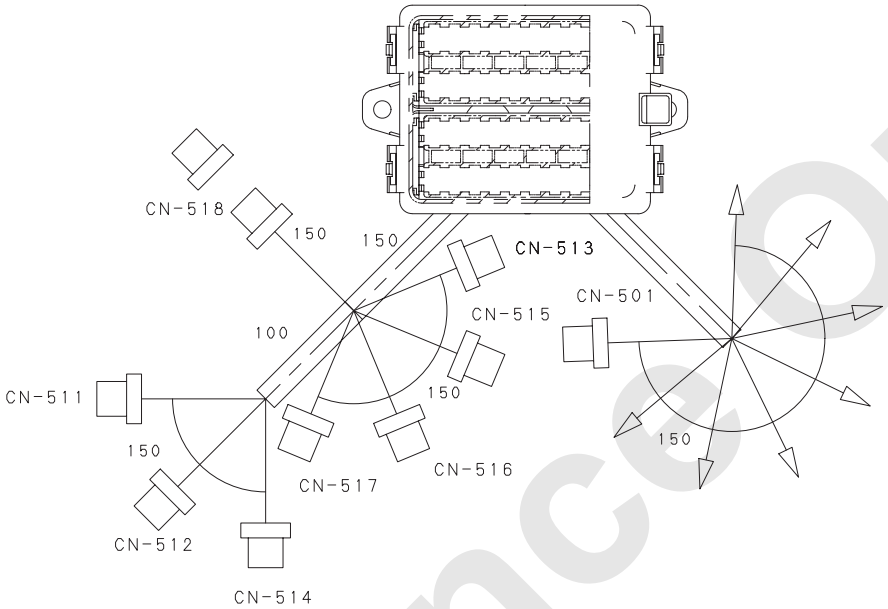

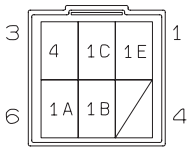

CN-501M
Connector No.
7122-2262(YAZAKI)

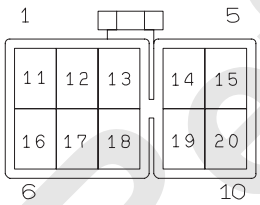

CN-511F
Connector No.
7123-2800(YAZAKI)

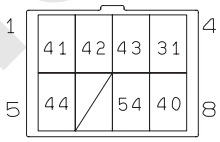

CN-512F
Connector No.
7123-2186(YAZAKI)

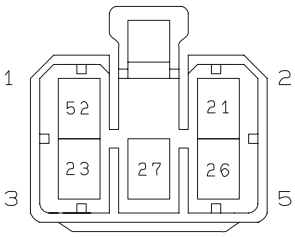

CN-514F
Connector No.
172494-1(AMP)

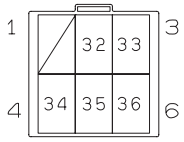

CN-513F
Connector No.
7123-2262(YAZAKI)

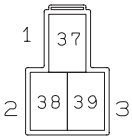

CN-515F
Connector No.
7123-2237(YAZAKI)

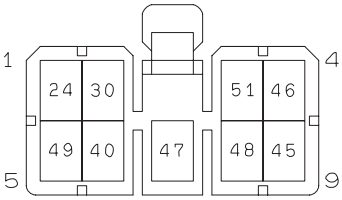

CN-516F
Connector No.
172496-1(AMP)

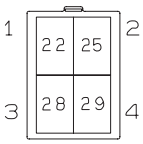

CN-517F
Connector No.
7123-2446(YAZAKI)

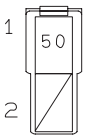

CN-518F
Connector No.
7123-2228(YAZAKI)

Reference Only

Fuse Connection Schematic

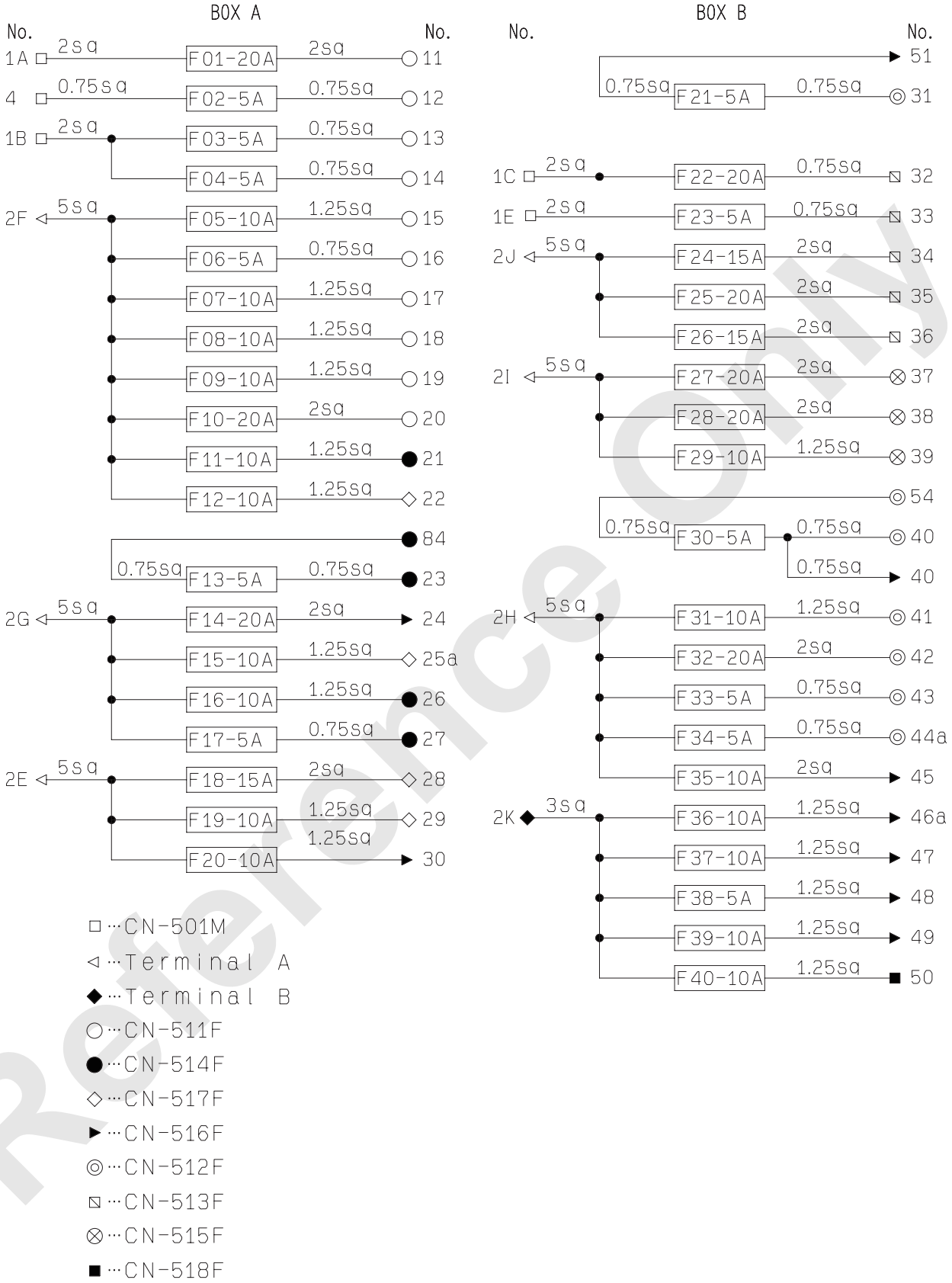

Reference Only

Label

F	A		F	A	F	A		F	A
1	20	20A X 2	11	10	21	5	10A X 5	31	10
2	5		12	10	22	20		32	20
3	5		13	5	23	5		33	5
4	5		14	20	24	15		34	5
5	10	15A X 1 (Spare)	15	10	25	20	5A X 4 (Spare)	35	10
6	5		16	10	26	15		36	10
7	10		17	5	27	20		37	10
8	10		18	15	28	20		38	5
9	10		19	10	29	10		39	10
10	20		20	10	30	5		40	10

Reference Only

10.1.4 WIPER CONTROL RELAY

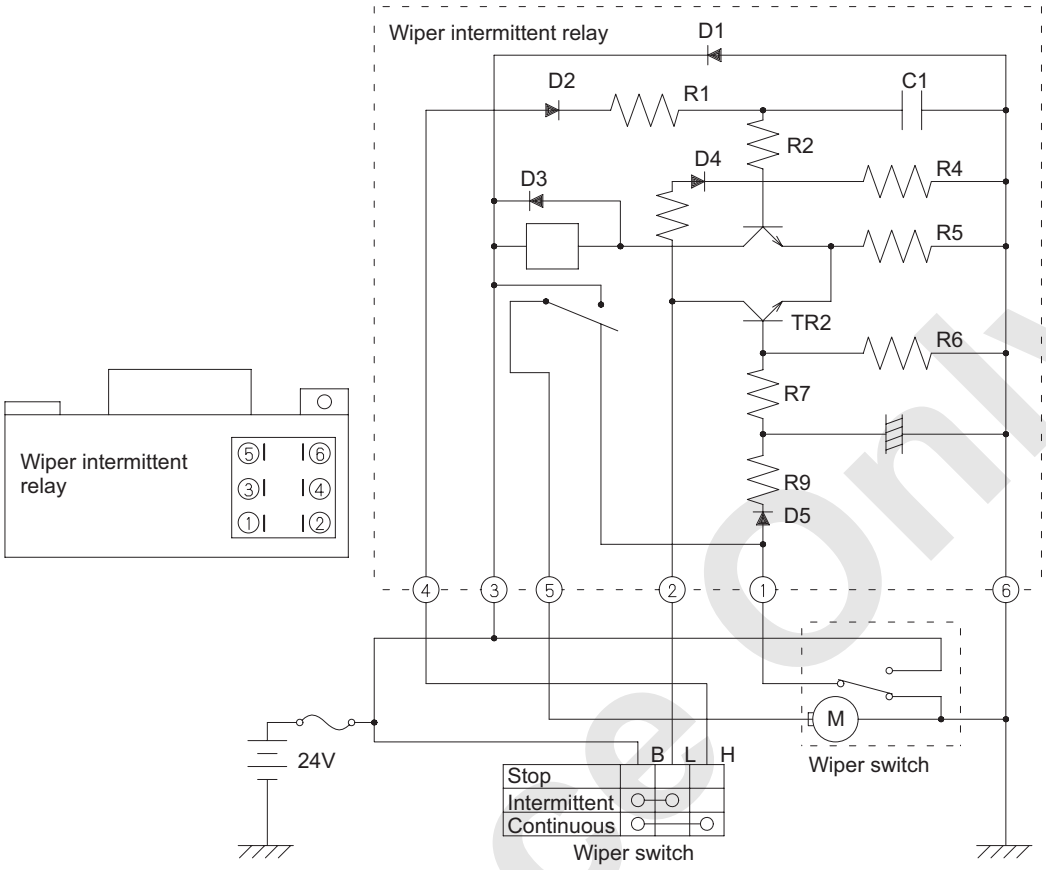

Reference Only

10.1.5 PRESSURE SWITCH (FOR TRAVEL MOTION DETECT)

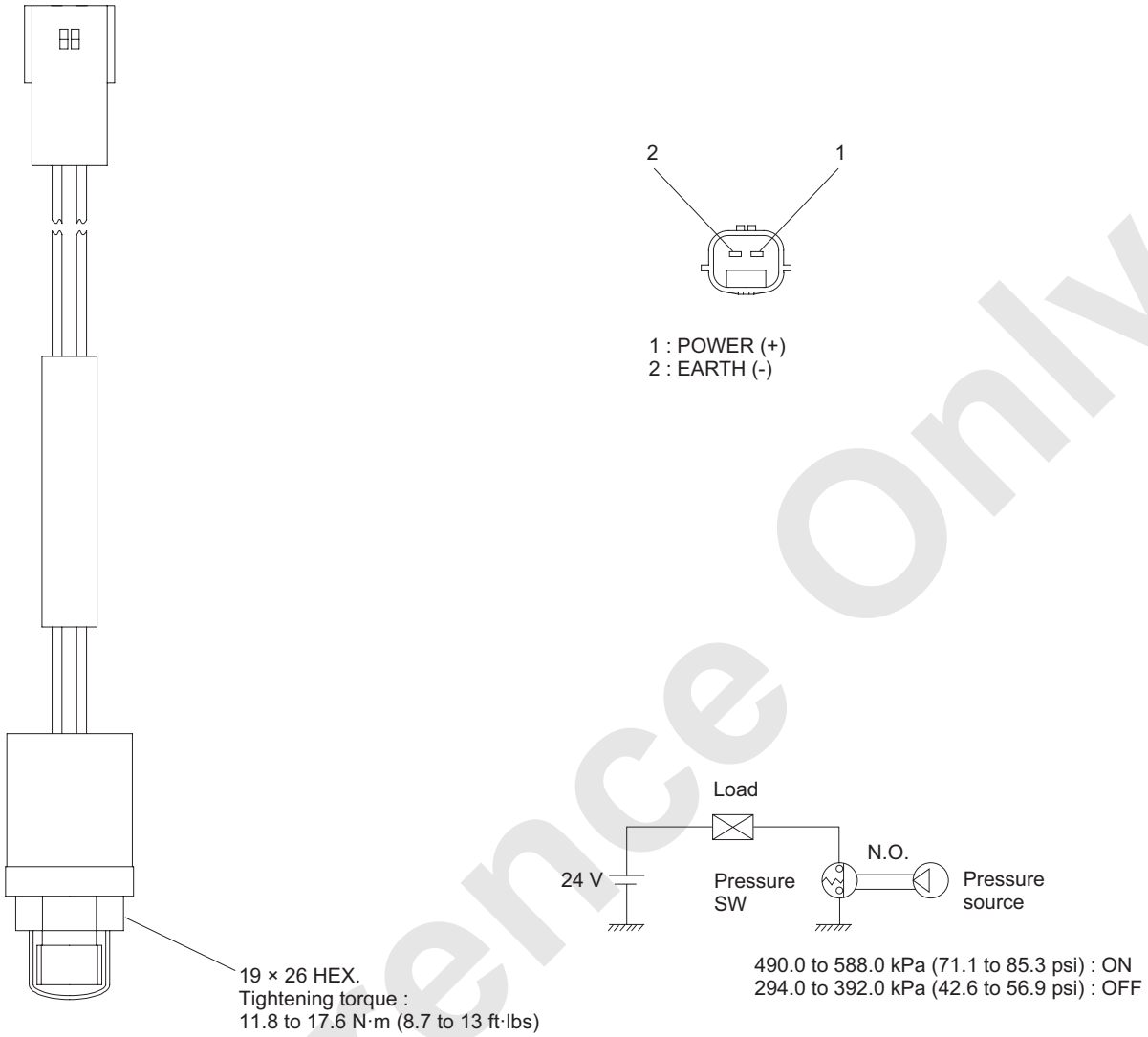

Use	Part number	[ON] Pressure	[OFF] Pressure
Travel motion detect pressure		490.0 to 588.0 kPa (71.1 to 85.3 psi)	294.0 to 392.0 kPa (42.6 to 56.9 psi)

Reference Only

10.1.6 PRESSURE SWITCH (FOOT BRAKE)

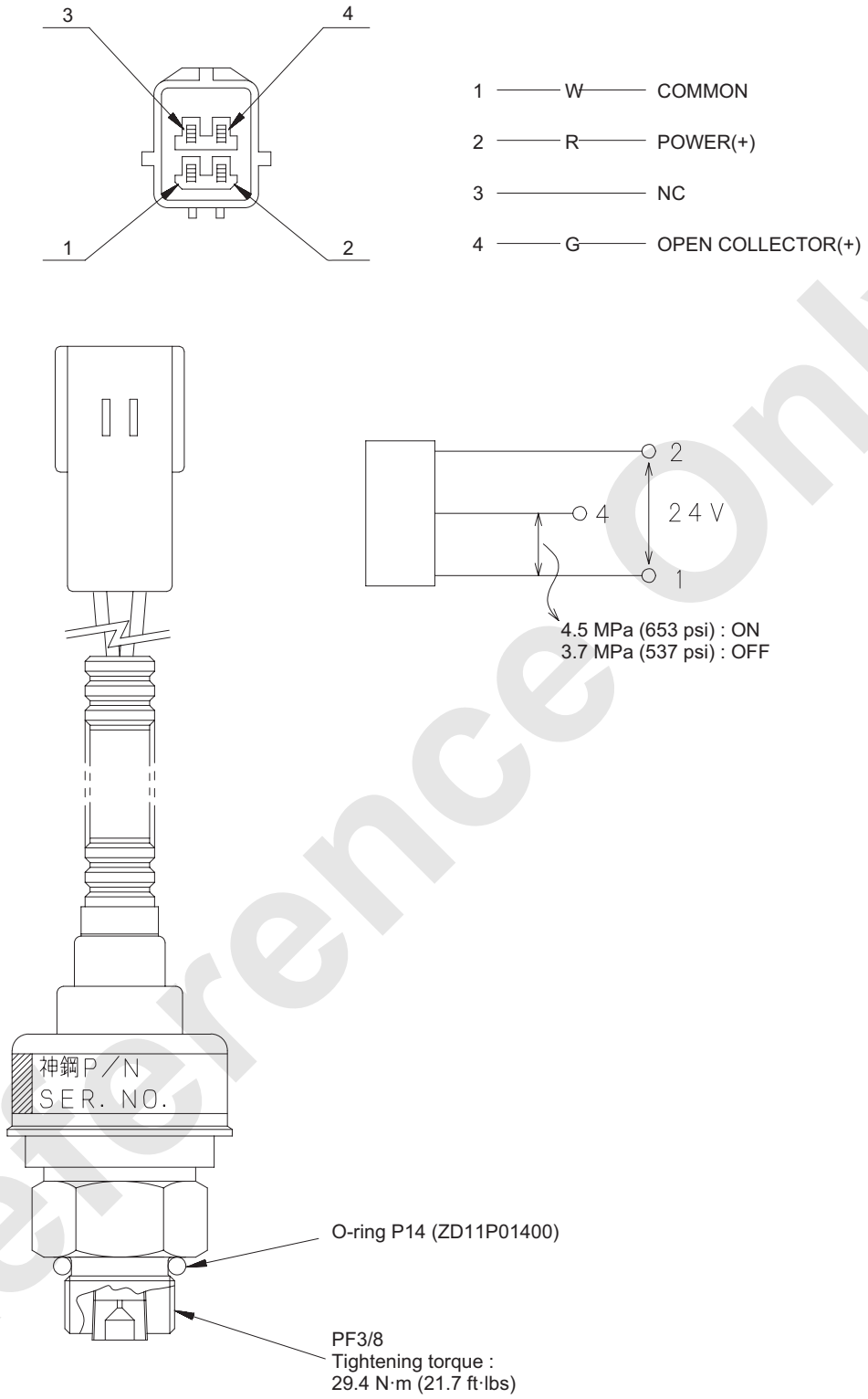

Use	Part number	[ON] Pressure	[OFF] Pressure
Foot brake pressure		4.5 MPa (653 psi)	3.7 MPa (537 psi)

Reference Only

10.1.7 PRESSURE SENSOR

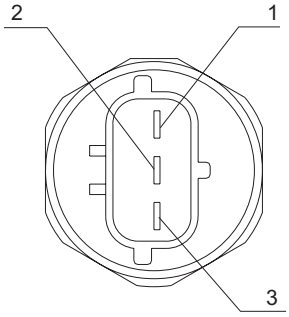

Location of connector terminal No.

1. COMMON
2. OUT - PUT (+)
3. POWER (+)

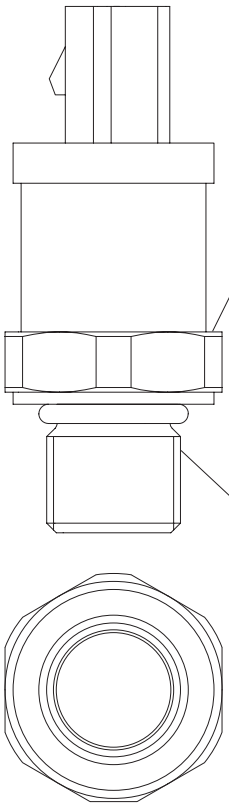

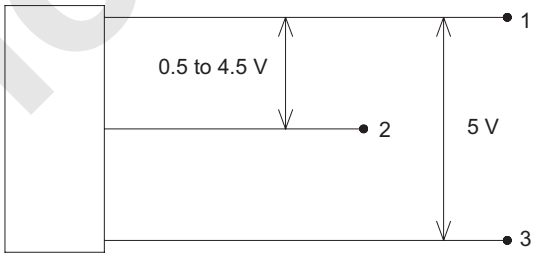

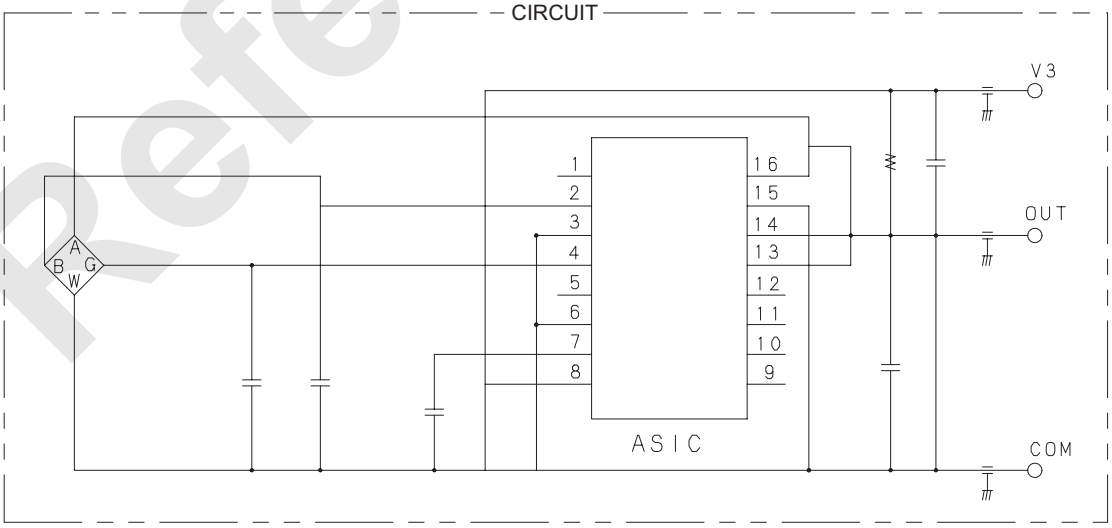

Reference Only

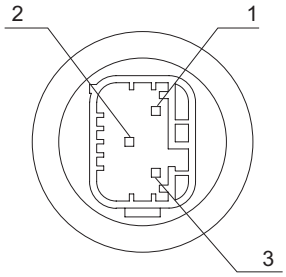

Location of connector terminal No.

1. COMMON
2. OUT - PUT (+)
3. POWER (+)

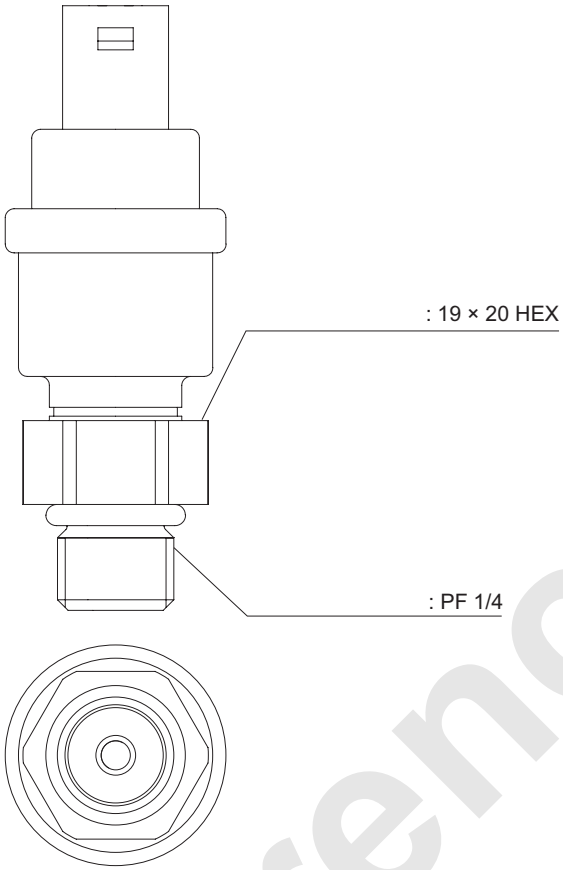

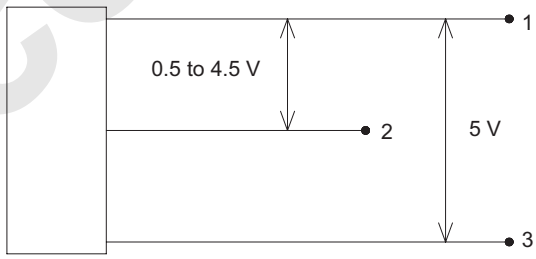

Use	Part number	Pressure raqnge	Power	Out-put
• Main pump power shift control pressure • Swing motion detect pressure (R/L) • CHP cracking pressure • Remote control pressure (Front, Rear, 3rd, Swing, Boom) • Motor control pressure (Front, Rear, 3rd)		0 to 3 MPa (0 to 435 psi)	5 V	0.5 to 4.5 V
• Swing pump pressure • Independence confluence select • Q max cut pressure		0 to 50 MPa (0 to 7,252 psi)	5 V	0.5 to 4.5 V

NOTE

Pressure range	0 to 3 MPa (0 to 435 psi)	Pressure range	0 to 50 MPa (0 to 7,252 psi)
Voltage Vcc	4.5 to 5.5 VDC	Voltage Vcc	4.5 to 5.5 VDC
Out-put	1/10 Vcc = 0.5 V to 4.5 V	Out-put	1/10 Vcc = 0.5 V to 4.5 V
Tightning torque	32 N·m (26.7 ft·lbs) max	Tightning torque	73.5 N·m (54.2 ft·lbs) max

Reference Only

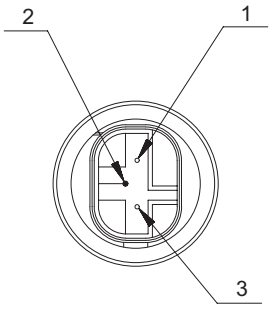

Location of connector terminal No.

1. COMMON
2. OUT - PUT (+)
3. POWER (+)

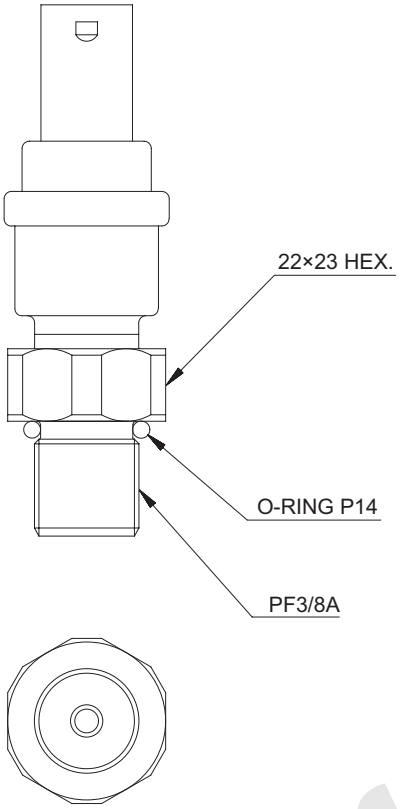

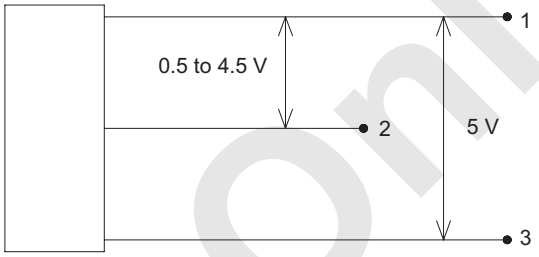

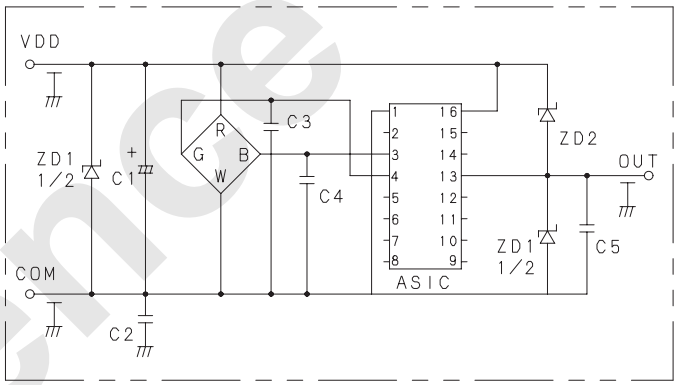

Use	Part number	Pressure raqnge	Power	Out-put
• Clutch pressure (Front, Rear, 3rd) • Control pressure (Primary side)		0 to 19.6 MPa (0 to 2,842 psi)	5 V	0.5 to 4.5 V

NOTE

Tightening torque	73.5 N·m (54.2 ft·lbs)

Reference Only

10.1.8 INCLINATION SENSOR

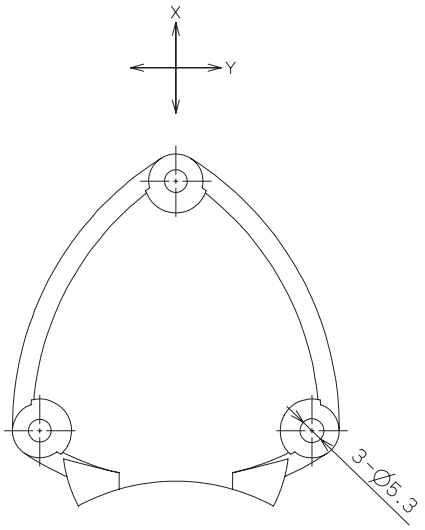

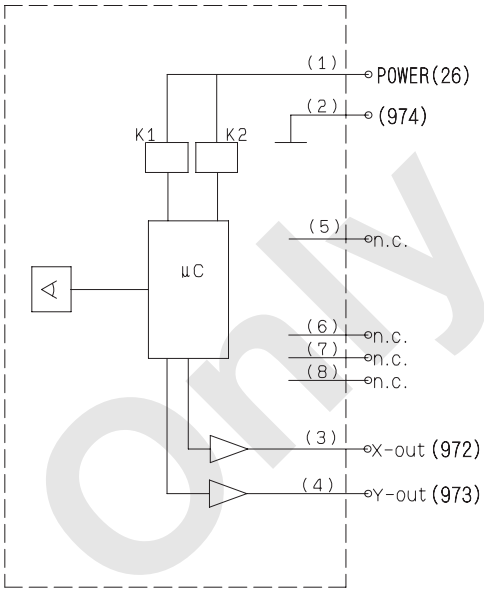

Electrical shematic

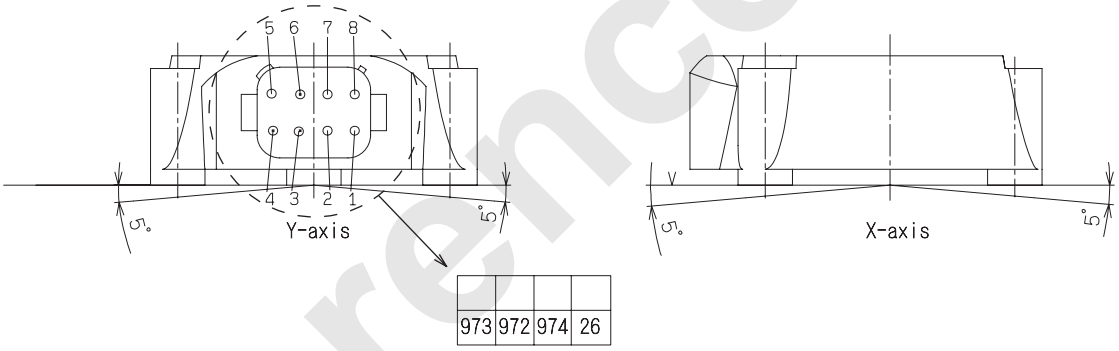

Type	N4AA20010
Angle range	±5 degrees
Power source	10 to 30 VDC
Power consumption	typ. 22 mA
Output	X-axis 0.5 to 4.5 V Y-axis 0.5 to 4.5 V
Load resistance	min.10 kΩ
Zero adjustment	±5 degrees
Resolution	0.04 degrees
Linearity error	1% typ. of angle range

Repetition accuracy	±0.2 degrees typ.
Temperature drift	1.3% typ.
Protection class	IP 67
Temperature range	-40 to 70°C
Vibration resistance	Endurance 10 to 500 Hz Amplitude width 3 mm X, Y, Z direction 96h (about 20G)
Impact resistance	Endurance 500 m/s^2 (about 50G) X, Y, Z direction about 10th

Reference Only

10.1.9 BUZZER UNIT

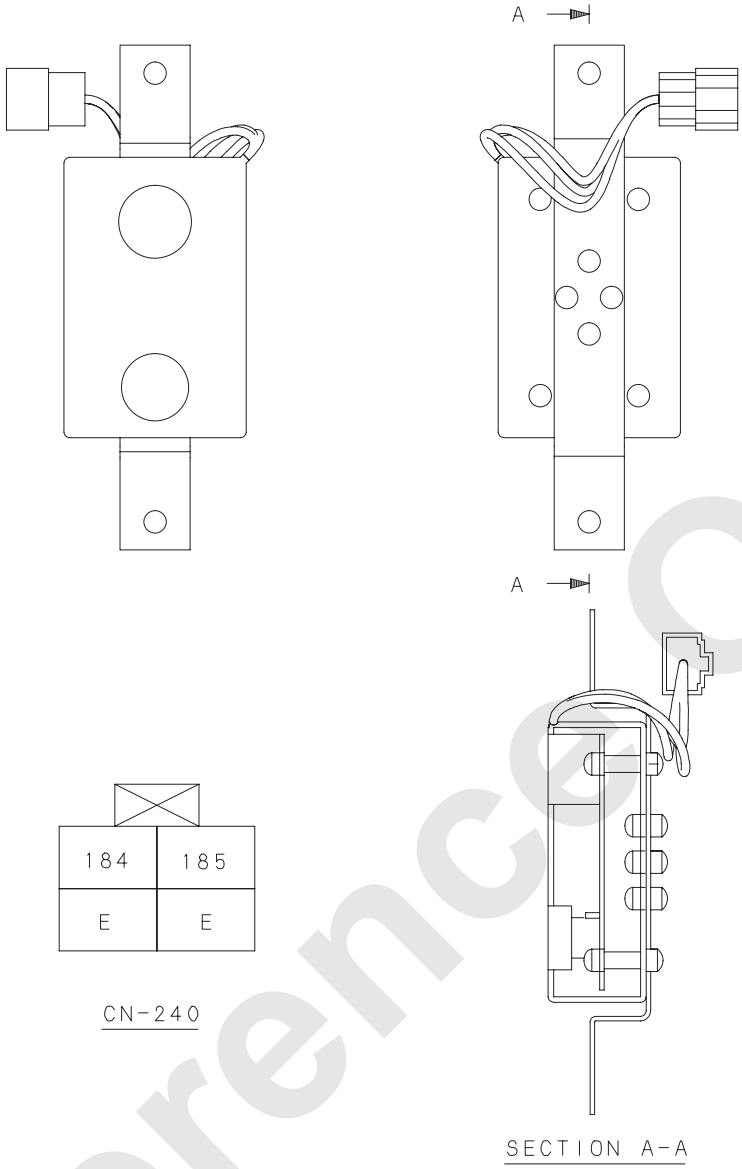

Buzzer to be used	High-pitched tone	FDK corp.	EB2210A-38C-12V
	Low-pitched tone	Bass Star precession corp.	TMX-12F

Rated Volt	24 V
Work range (Volt)	19 to 32 V
Working temperature range	-10 to 60°C
Storage temperature range	-20 to 70°C
Humidity	0 to 90 %
Sound volume	75 db / 30 cm MIN
Consumption elc. current	Max. 50 mA

Reference Only

10.1.10 RELAY BOX

1. Arrangement of connector

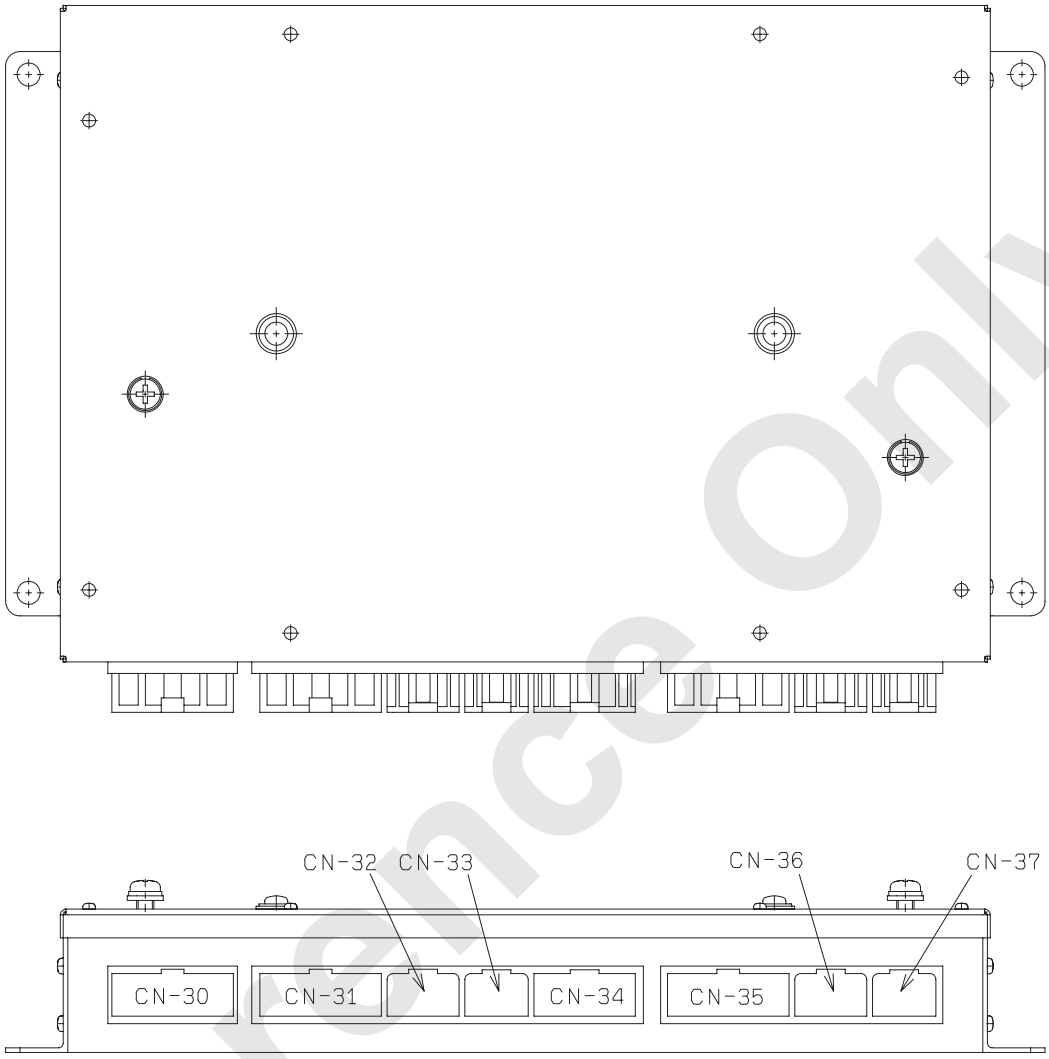

Reference Only

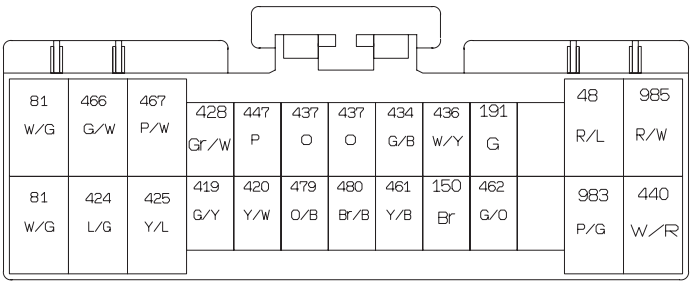

CN-30M
26MA-HB_GY

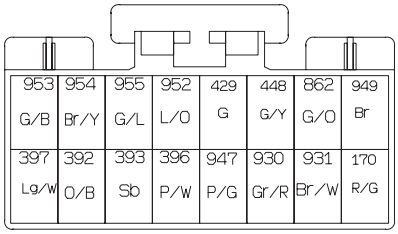

CN-32M
16MA-HB_GY

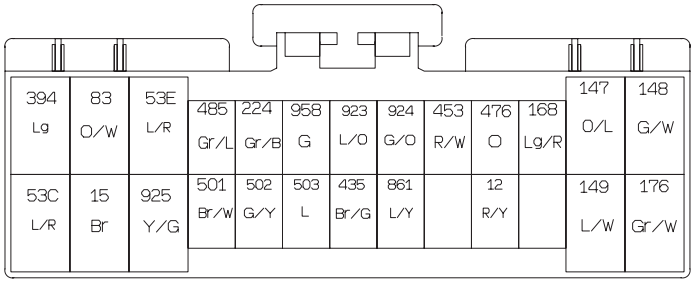

CN-31M
26MA-HB_GY

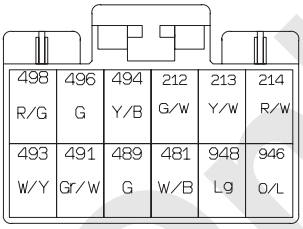

CN-33M
12MA-HBA_GY

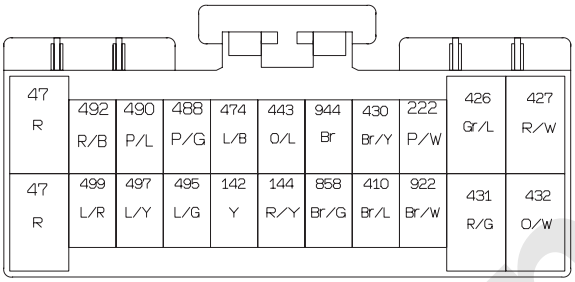

CN-34M
22MA-HB_GY

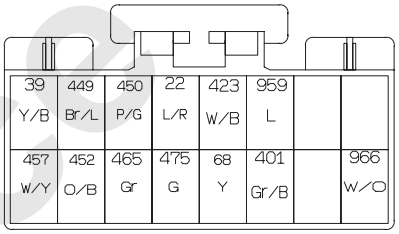

CN-36M
16MA-HB_GY

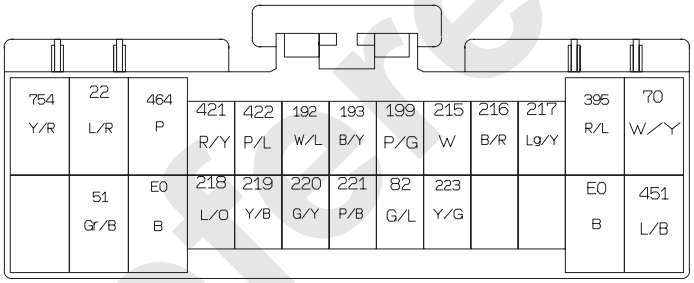

CN-35M
26MA-HB_GY

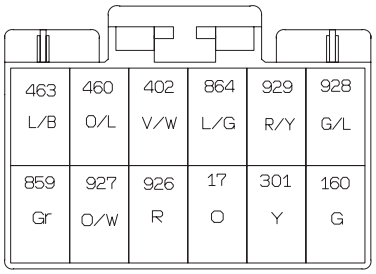

CN-37M
12MA-HB_GY

Reference Only

No.	Name
RL-1	Generation detect
RL-2	Safety
RL-3	Separate oil cooler motor
RL-4	AIS
RL-5	Starter lock
RL-6	Certify release
RL-7	Engine stop
RL-8	Remote control horn
RL-9	Swing parking control
RL-10-1	Swing parking 1
RL-10-2	Swing parking 2
RL-12	Swing parking 3
RL-13	Pilot pressure cut
RL-14	Swing Hi/Low pressure select
RL-15	Swing neutral brake select
RL-16	Travel alarm
RL-17	Voice alarm
RL-18	Hyd. pressure select (SOL45)
RL-19	Hyd. pressure select (SOL44)
RL-20	Hyd. oil heat
RL-21	Engine restart
RL-22-1	MC1 bypass (left swing stop +)
RL-22-2	MC1 bypass (left swing stop -)
RL-22-3	MC1 bypass (right swing stop +)
RL-22-4	MC1 bypass (right swing stop -)
RL-22-5	MC1 bypass (main pump 1 +)
RL-22-6	MC1 bypass (main pump 1 -)
RL-22-7	MC1 bypass (main pump 2 +)
RL-22-8	MC1 bypass (main pump 2 -)
RL-22-9	MC1 bypass (boom pump +)
RL-22-10	MC1 bypass (boom pump -)
RL-23	Key resumption
RL-24	ML bypass reset

No.	Name
RL-25-1	ML bypass hold 1
RL-25-2	ML bypass hold 2
RL-27	Swing buzzer
RL-28	Speed limit release
RL-29	Speed limit
RL-30	Outside indication lamp (green)
RL-31	Outside indication lamp (yellow)
RL-32	Outside indication lamp (red)
RL-36	ML adjust mode select
RL-37	DPF Regeneration
RL-38	Swing flasher (L)
RL-39	Swing flasher (R)
RL-40	Pump Qmax cut
RL-41	CLM
RL-42	ESM
RL-43	CLA
RL-44	ESA
RL-45	CLT
RL-46	EST
RL-47	Front free select
RL-48	Rear free select
RL-49	Third free select
RL-50-1	Jib over hoist 1
RL-50-2	Jib over hoist 2
RL-51	No. 2 limit
RL-53	Boom over hoist
RL-54	Self removal select
RL-55	Assy / disassy select
RL-56	Mast model self removal select
RL-57-1	Jib mode select 1
RL-57-2	Jib mode select 2
RL-58-1	Bend - prevent relay (R. upper)
RL-58-2	Bend - prevent relay (L. upper)

Reference Only

2. Relay box schematic

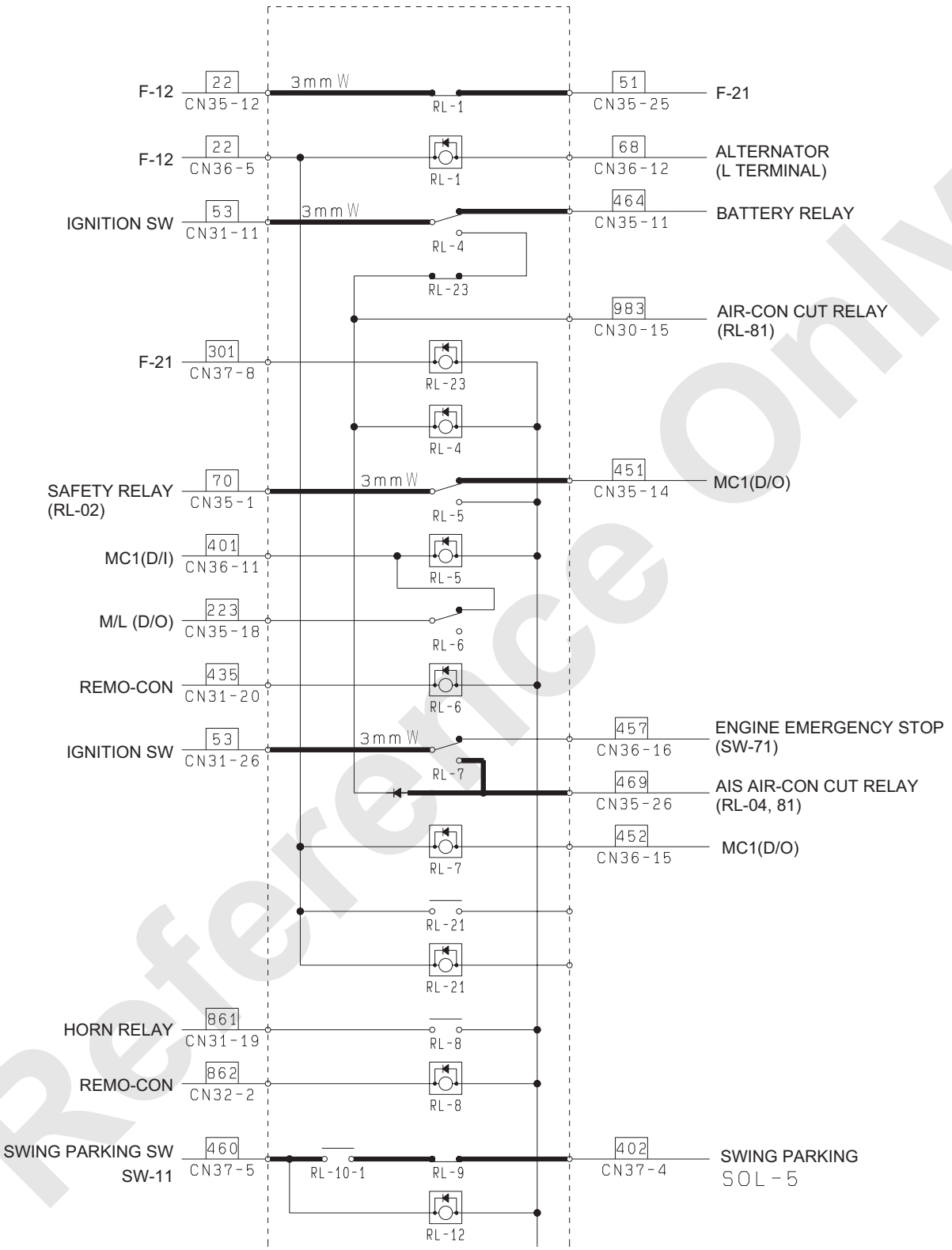

Reference Only

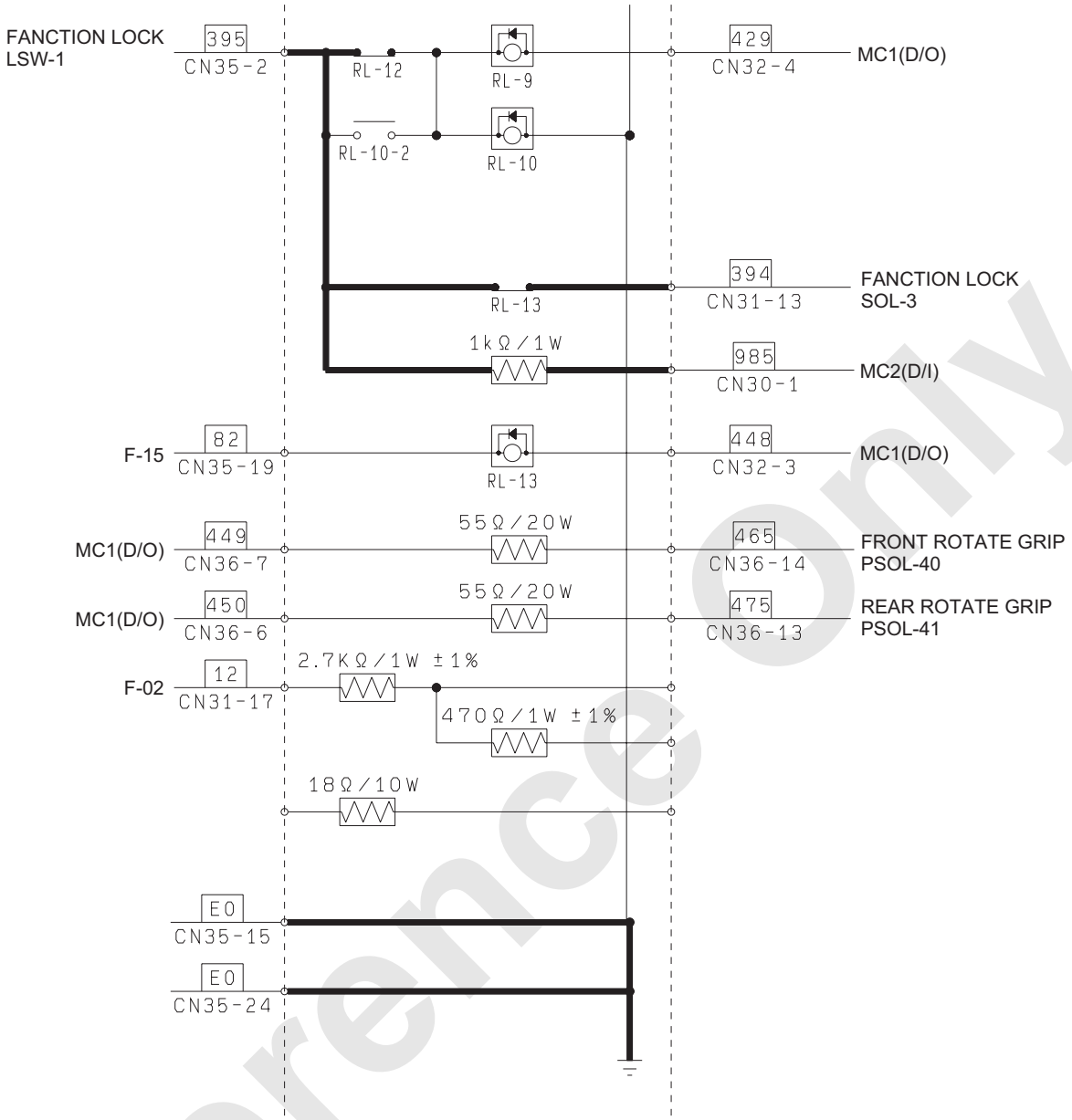

Reference Only

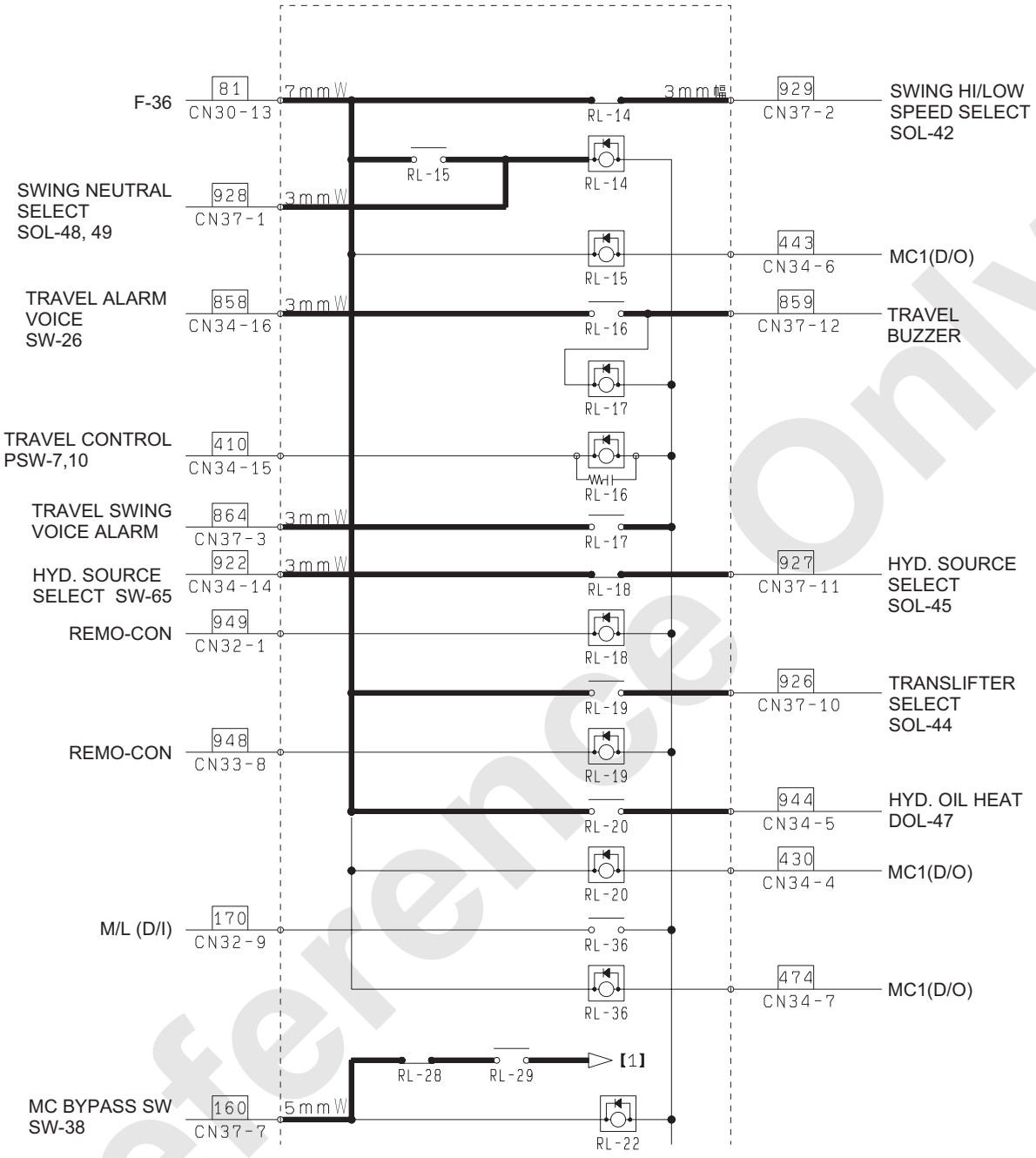

Reference Only

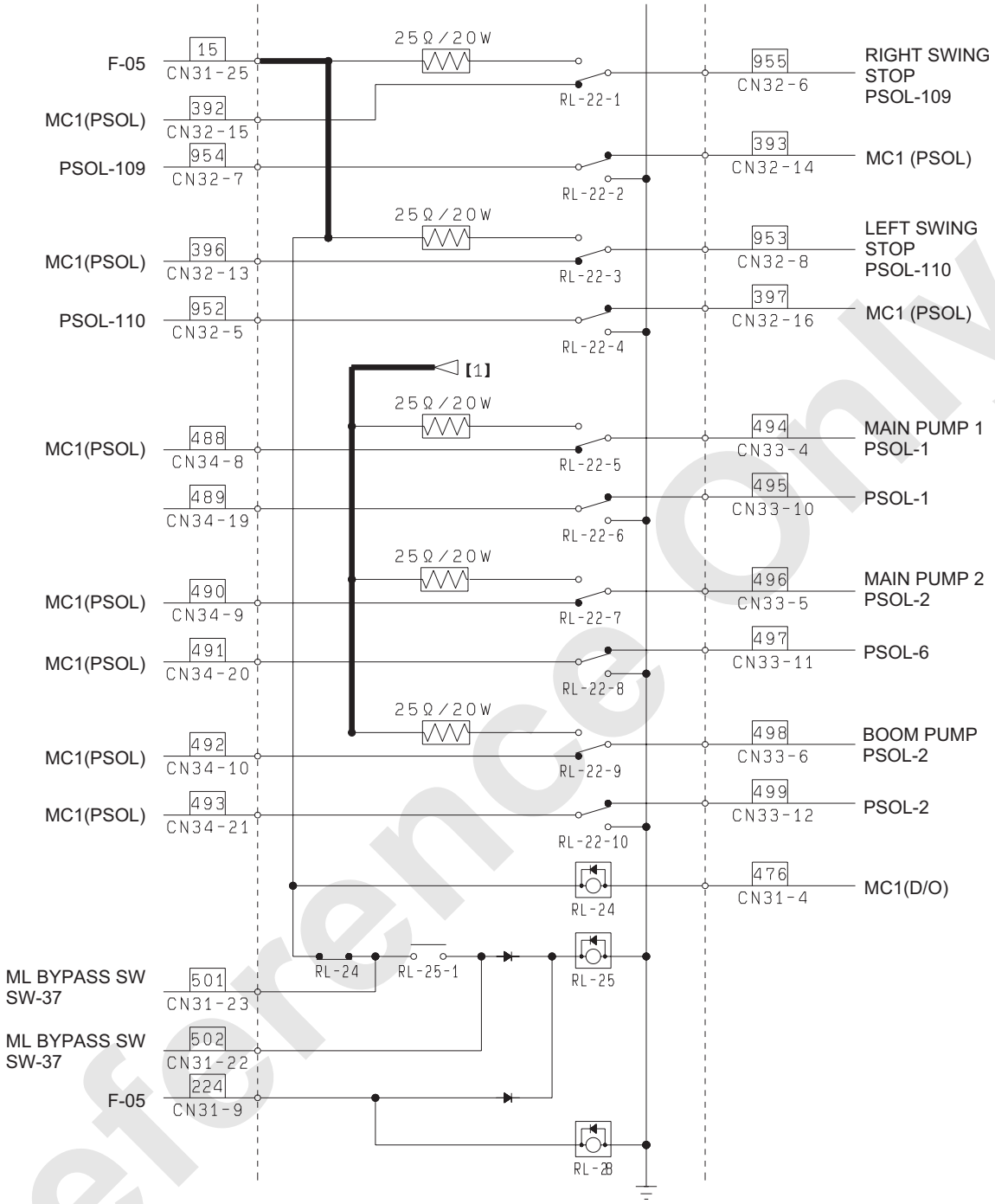

Reference Only

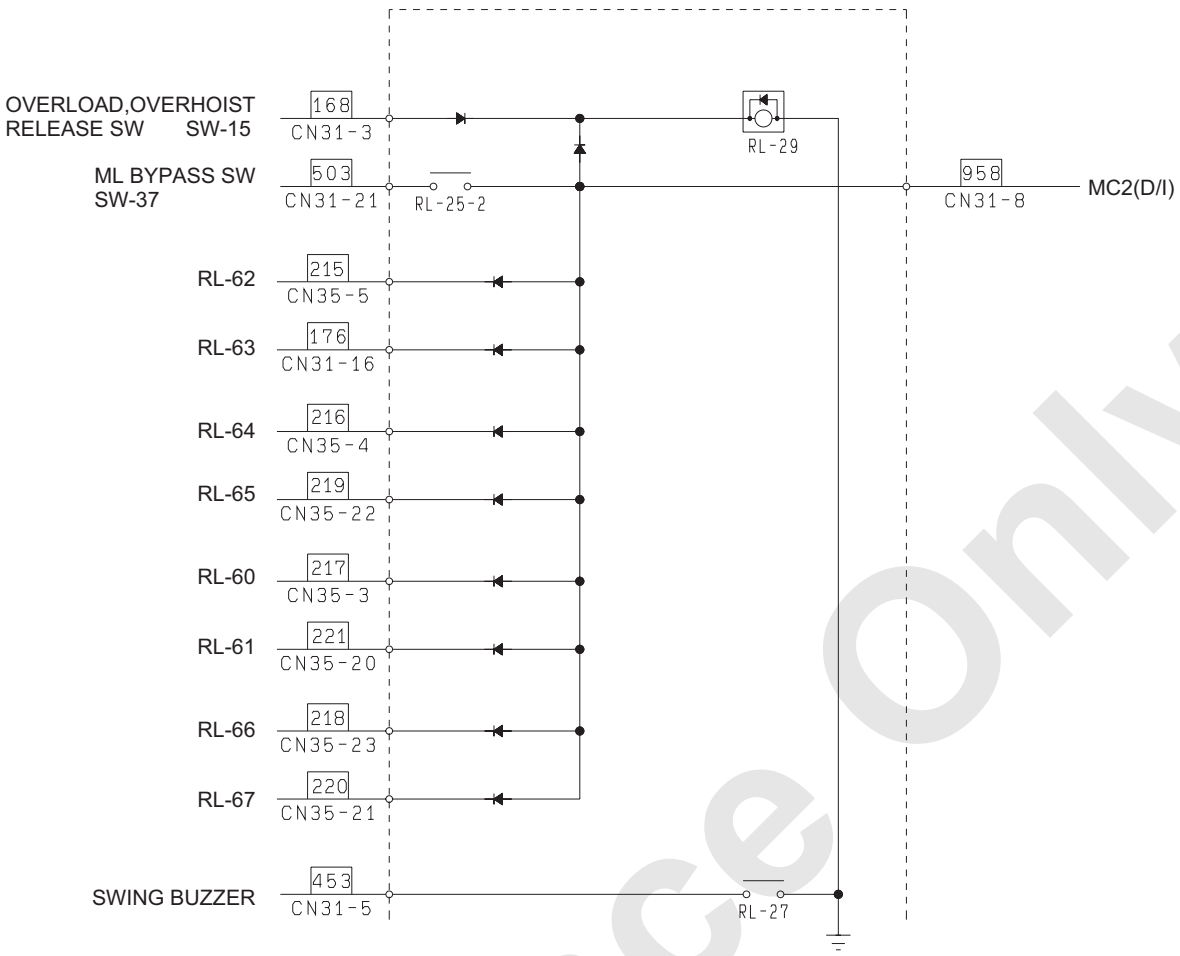

Reference Only

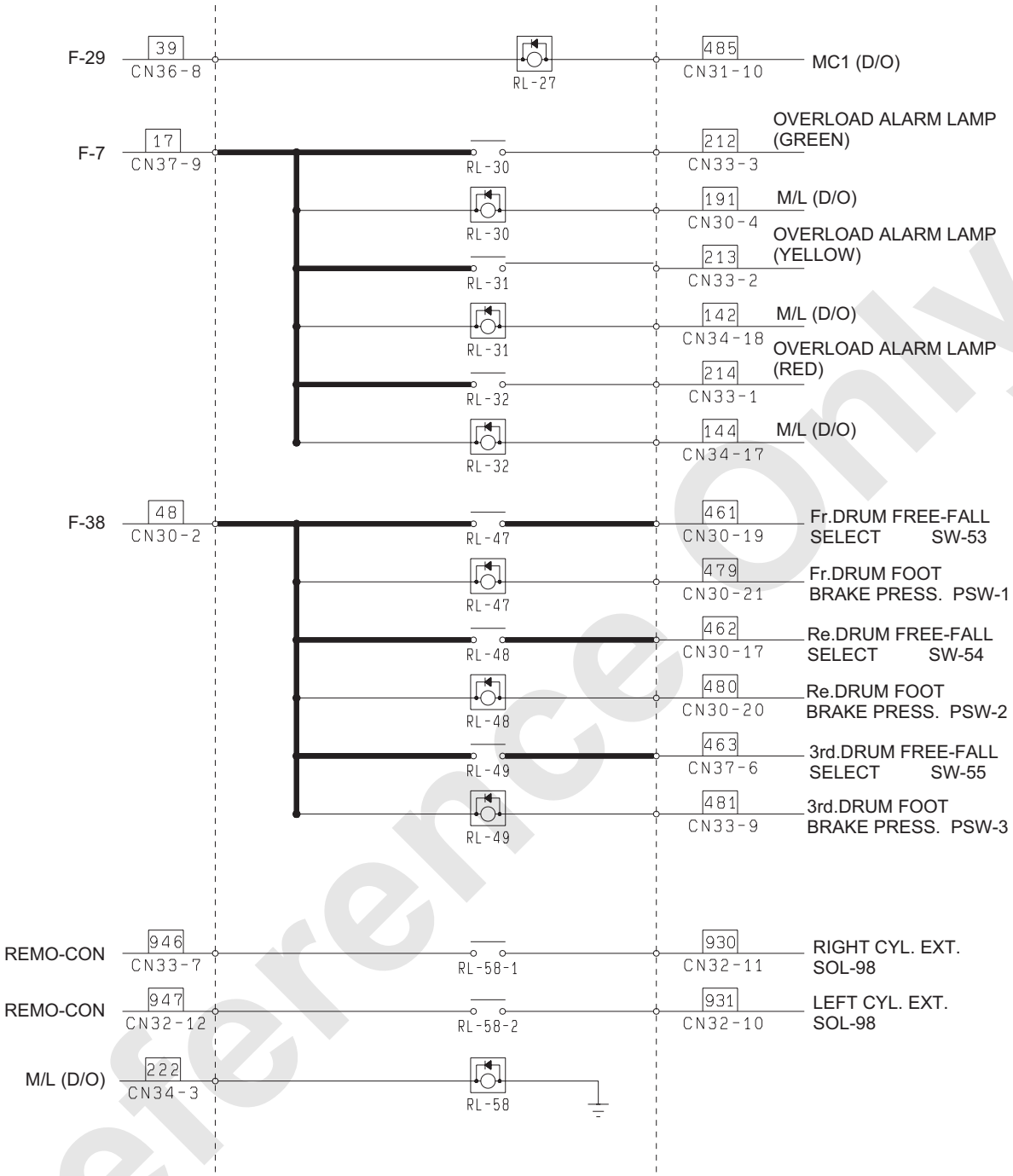

Reference Only

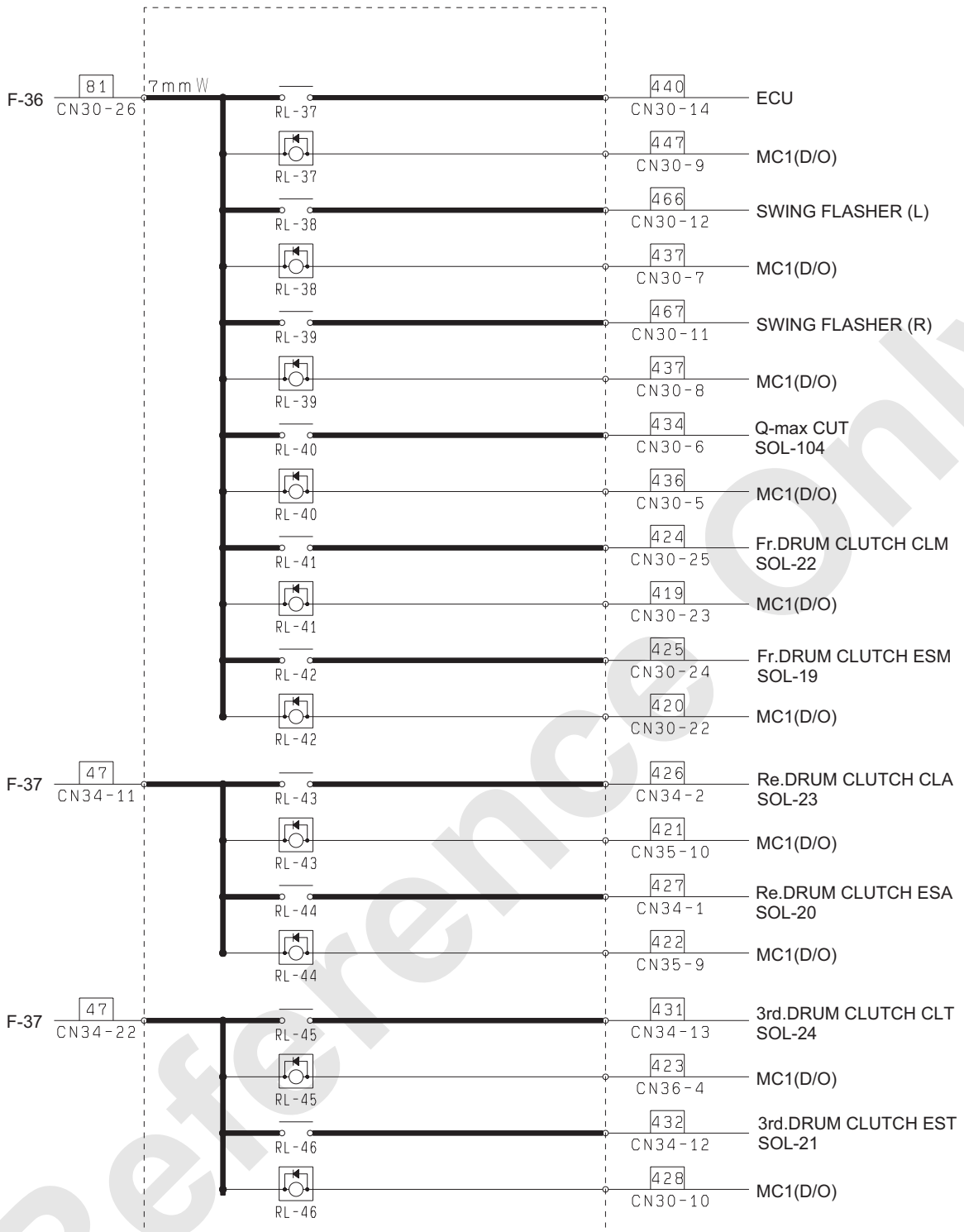

Reference Only

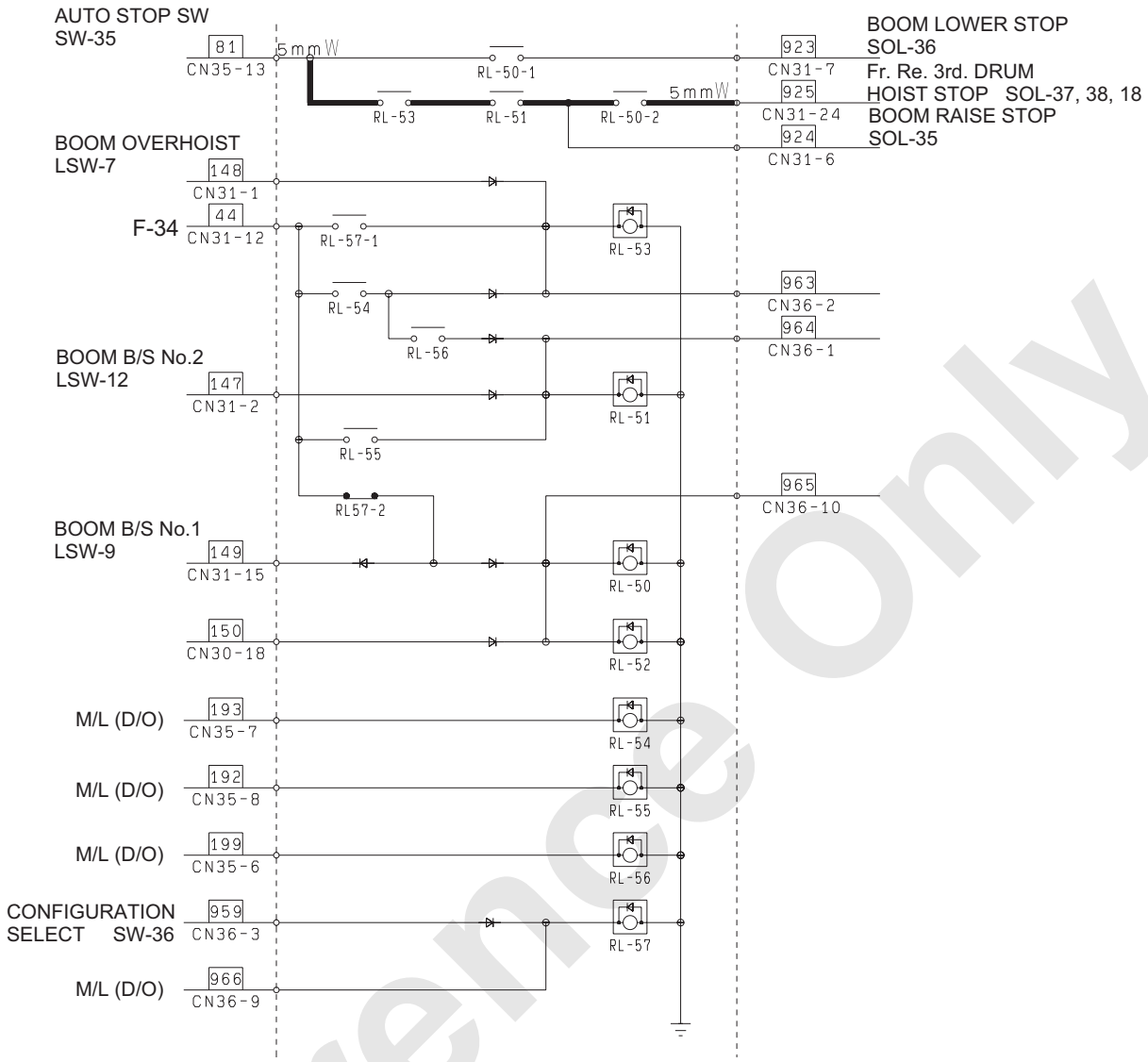

Reference Only

10.1.11 RELAY BOX

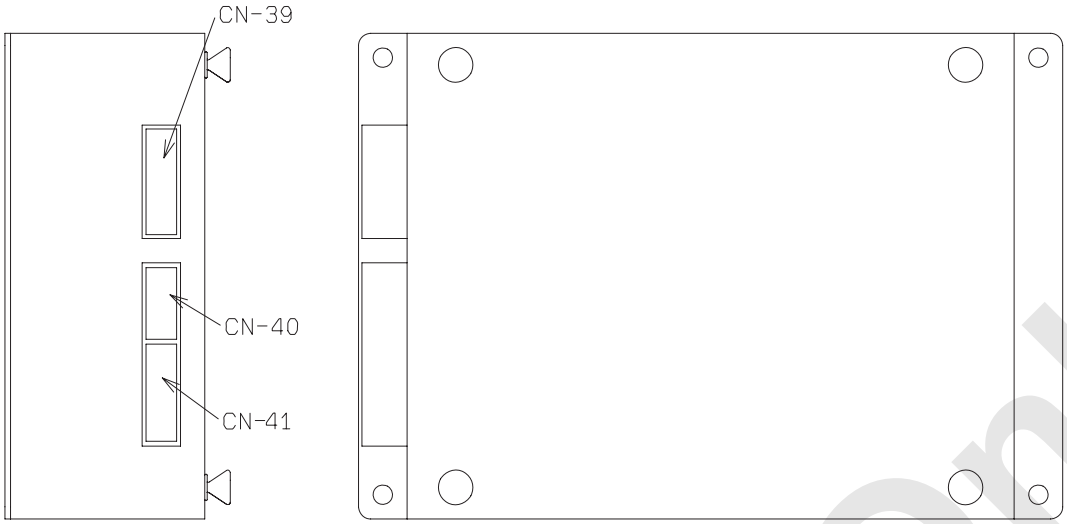

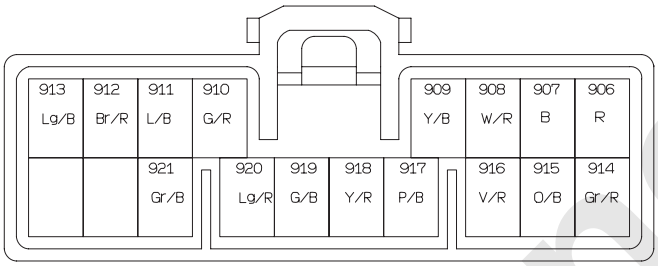

CN-39M
18MA-070ML1

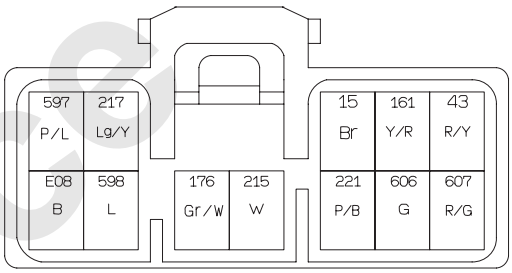

CN-40M
12MA-070ML1

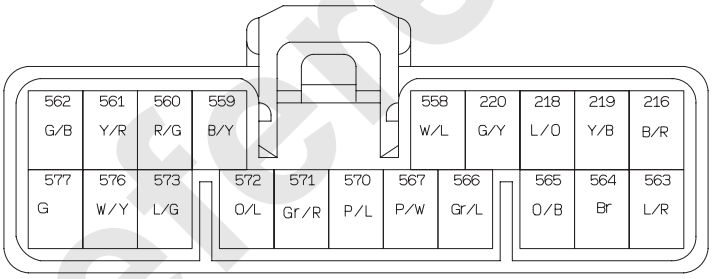

CN-41M
20MA-070ML1

No.	Name
RL-60	Boom hoist raise stop relay
RL-61	Boom hoist lower stop relay
RL-62	Front hoist stop relay
RL-63	Front lower stop relay
RL-64	Rear hoist stop relay
RL-65	Rear lower stop relay

No.	Name
RL-66	Third hoist stop relay
RL-67	Third lower stop relay
RL-68	MC bypass relay 1
RL-69	Independence, confluence select (F)
RL-70	Independence, confluence select (R)

Reference Only

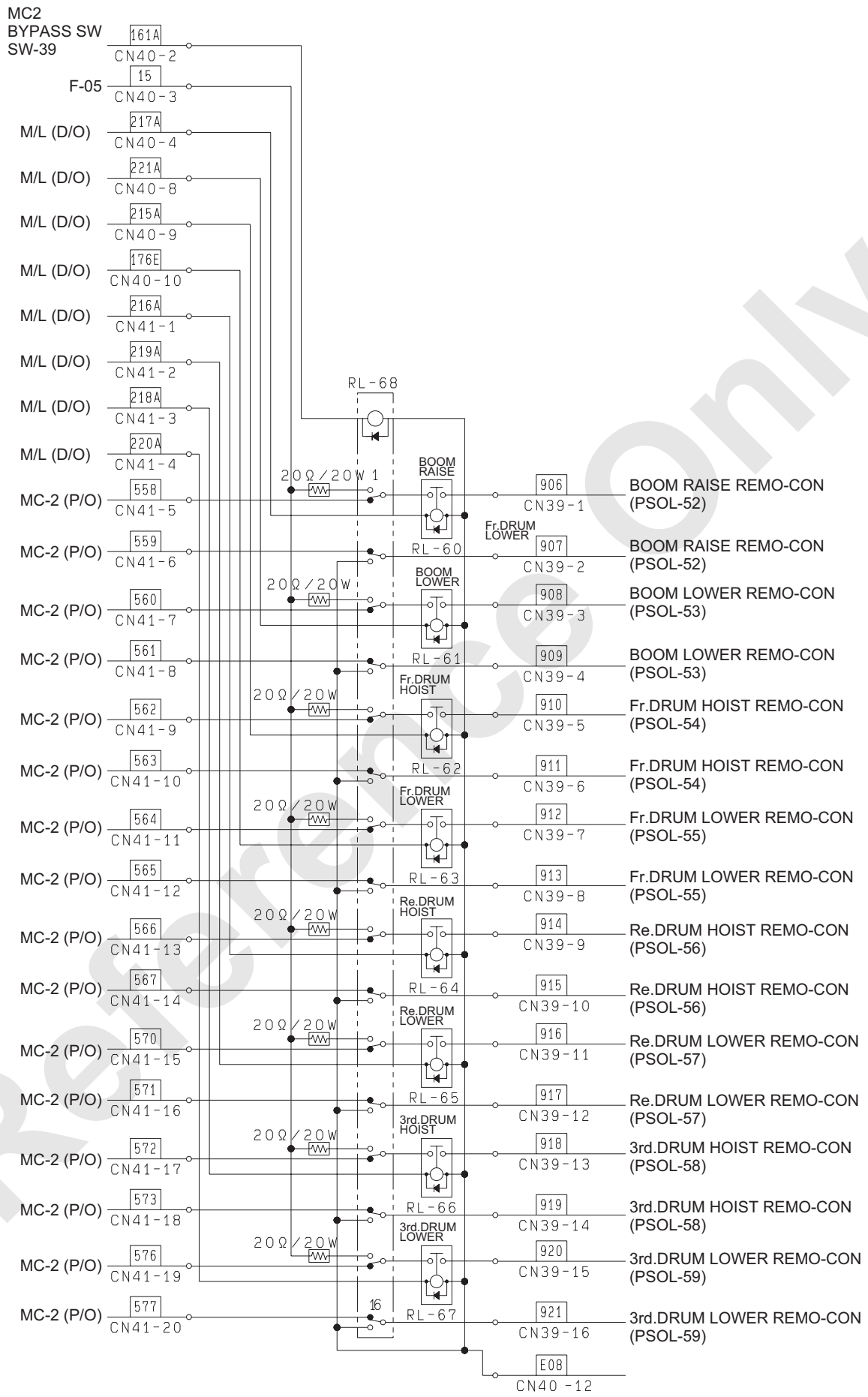

Reference Only

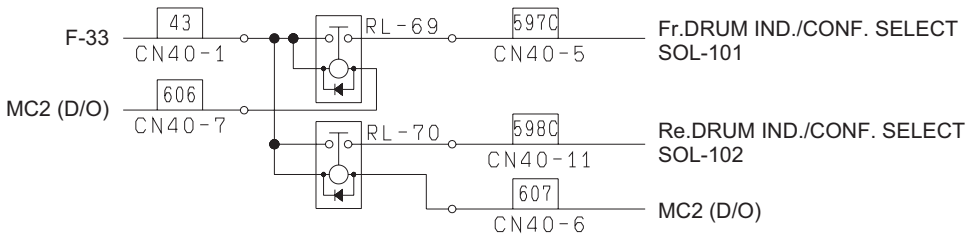

Reference Only

10.1.12 LOAD DETECTOR (CRANE)

Model name	LTP-S-50-KNSA10
Detective capacity	Guy-cable support power
Rated capacity	5 ton (49.03 KN)
Load capacity	150%
Output voltage	with no load 1 V ± 0.01 V (at shipping)
	with rated load 5 V ± 0.040 V
Power source	DC9V ± 15 V (under 30 mA)
Output resistance	Appr. under 100 Ω
Insulated resistance	500M Ω / above 25 VDC
Non Lineality	± 0.01% RO/°C
Hysteresis	± 0.03% RO/°C
Temperature compensation range	-30°C + 65°C
Temperature capacity	-35°C to + 75°C
Temperature effect at zero point	± 0.1% RO/°C
Temperature effect at output	± 0.1% RO/°C
Output cable	None
	apex classification 5P water proof plug AE770L14-05P
Vibration proof	69.6 m/s 33 Hz up/down for 4 hours and left/right, front/back for 2 hours.
Shock proof	245 m/s, 15 mS X,Y, Z (3 times each)
Water proof	Conforms to IP67 or equivalent (JIS C0920 non-seaping type)
Durability	5×10^5 times
Noise proof	DC700 V 100 ns
Total integrity	2.9% RO
Weight	About 3 kg

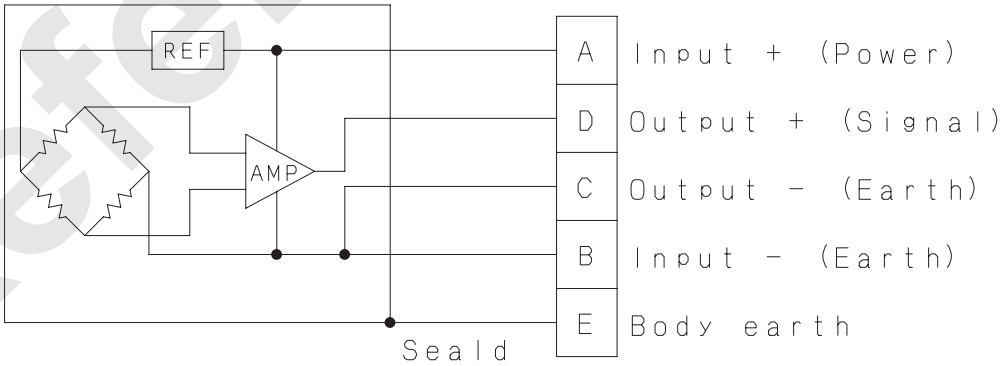

Reference Only

10.1.13 ANGLE SENSOR

Model name :	MLA-901A-**C
Object to detect :	Boom angle against ground
Valid operating range :	0 to ± 90 degree
Operation range :	360° endless
Rated output sensitivity :	0.255 V/V ± 0.5%
Input voltage :	10V
Input resistance :	50 kΩ ± 5%
Output resistance :	(25000 + 141.6 × θ) Ω ± 5%
Detecting accuracy :	± 1°
Initial imbalance :	Set within ±5°
Insulate resistance :	100M Ω/ 50VDC
Output cable :	Cabtire crolobren cable 0.5 mm^2 × 4
Cable analysis :	Bending radius : R100, Tensile strength : 8 kg
Cable apex :	5P water proof plug AE776L14-05S+MT12-14+MS3180-14CAL
Control method :	Oil damper
Monitor :	With outside weight 0° , 30° , 60° , 90° Monitorable
Case material :	Plastic (Toshiba premix AP-902S)
Surface treatment :	Non, stripe (Black)
Temperature range :	-20 to 70°C
Store temp. :	-40 to 80°C
Weight :	appr. 1.2 kg (main body), appr. 65 g/m (cable)

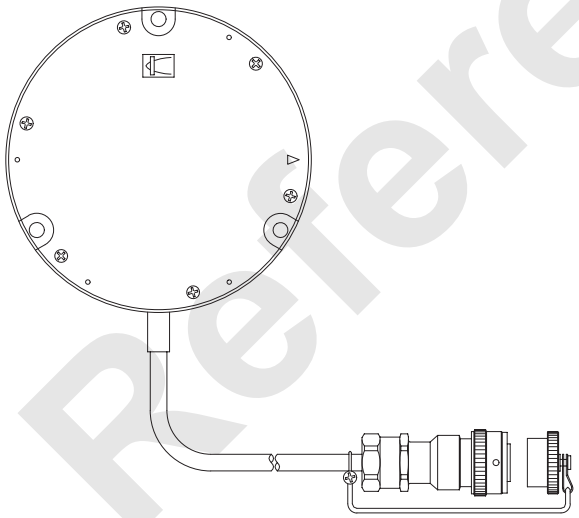

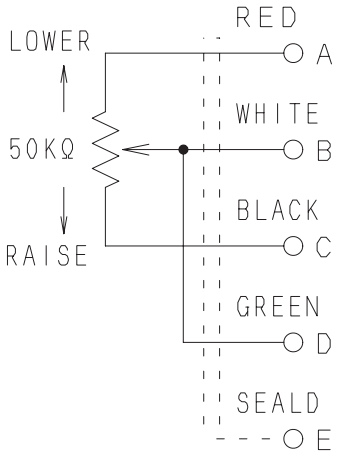

A-C Resistance :50KΩ
A-B Resistance (R) :25000+141.6Xθ°

Reference Only

This page is blank for editing convenience.

Reference Only

10.1.14 HOW TO CHECK THE FAILURE CONTENTS

DST-1 diag. connector location

CN-486F is located beside of fuse box at behind operator's seat.

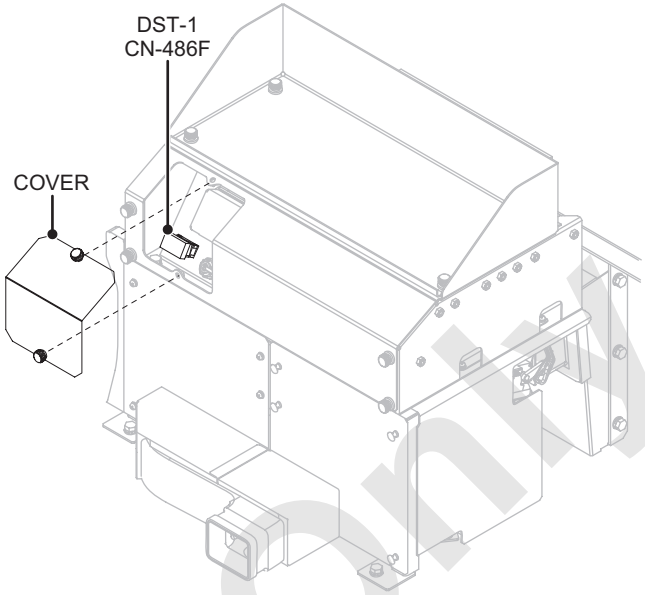

Reference Only

1. Table of Diagnosis codes (J08E-TI)

SAE code	System	TCCS digit code	Function	Check Lamp ON	Failure Level	Resume Timing	Injection volume limit	Engine Stop action	D P F Regeneration control	Failure judging condition	EGR Motion	Cause of failure	Remark
P0217	Each sensor system & related dialog	6	Over heat	—	2	Instant resume	Limited to 75%	No stop	—	Waater temp 115℃	Stop	Over heat	
P2228	Each sensor system & related dialog	15	Air pressure sensor failure （Lo）	○	2	Instant resume	Limited to 75%	No stop	—	＜1.90V	Stop	Sensor failure or unexpected high recognition	
P2229			Air pressure sensor failure（Hi）	○	2	Instant resume	Limited to 75%	No stop	—	＞4.20V	Stop		
P119F	Each sensor system & related dialog	74	Commonrail press. sensor charact.abnormal	○	1	Instant resume	No limit	No stop	—		—		
P0192			Commonrail press. Sensor failure（Lo）	○	2	After IG-OFF	No limit	No stop	No Regeneration	＜0.64V	Stop	Sensore failure or harness wire breaking, short	
P0193			Commonrail press. Sensor failure（Hi）	○	2	After IG-OFF	No limit	No stop	No Regeneration	＞4.78V	Stop		
P1197		74	Commonrail sub press. Sensor failure（Lo）	—	1	Instant resume	No limit	No stop	—	＜0.89V	—	Sensore failure or harness wire breaking, short	Due to main priority, no output limit since limited at B/U main failure.
P1198			Commonrail sub press. Sensor failure（Hi）	—	1	Instant resume	No limit	No stop	—	＞4.82V	—		
P0237	Each sensor system & related dialog	25	Intake air press. (boost P.) sensor failure(Lo)	○	2	After IG-OFF	Limited to 75%	No stop	—	＜0.19V	—	Sensore failure or harness wire breaking, short	Injection volume is surpressed and futher output down
P0108			Intake air press. (boost P.) sensor failure(Hi)	○	2	After IG-OFF	Limited to 75%	No stop	—	＞4.11	—		
P0117	Each sensor system & related dialog	11	Water temp sensor failure (Lo)	○	2	Instant resume	Limited to 75%	No stop	—	＜0.10V	Stop	Sensore failure or harness wire breaking, short	
P0118			Water temp sensor failure (Hi)	○	2	Instant resume	Limited to 75%	No stop	—	＞4.77V	Stop		
P0182	Each sensor system & related dialog	14	Combution temp. sensor failure (Lo)	○	1	Instant resume	No limit	No stop	—	＜0.10V	—	Sensore failure or harness wire breaking, short	
P0183			Combution temp. sensor failure (Hi)	○	1	Instant resume	No limit	No stop	—	＞4.85V	—		
P2120	Accel sensor system	22	Both accel sensor failure	○	1	After IG-OFF	No limit	No stop	—	1・2 sensor failed	—	Sensore failure or harness wire breaking, short	
P2121			Accel sensor 1 voltage abnormal	—	1	After IG-OFF	No limit	No stop	—		—		
P2122			Accel sensor 1 failure (Lo)	—	1	After IG-OFF	No limit	No stop	—	＜0. 30V	—		※C A N is main control
P2123			Accel sensor 1 failure (Hi)	—	1	After IG-OFF	No limit	No stop	—	＞4. 85V	—		※C A N is main control
P2126			Accel sensor 2 voltage abnormal	—	1	After IG-OFF	No limit	No stop	—		—		
P2127			Accel sensor 2 failure (Lo)	—	1	After IG-OFF	No limit	No stop	—	＜0. 30V	—		
P2128			Accel sensor 2 failure (Hi)	—	1	After IG-OFF	No limit	No stop	—	＞4. 85V	—		
P1133		23	Work accel sensor （Hi）	—	1	After IG-OFF	No limit	No stop	—	＞4. 85V	—		
P0335	Rotating sensore system	13	Main rotate sensor failure, Both rotate sensor failure	○	2	Instant resume	Limited to 75%	No stop	—		Stop	When front rotate sensor failure. harness abnormal, both sensors failed starter ON at certain level.	Intake air volume is required in calculation. At fault Eng. Is closed.
P0336			Main rotate sensor pulse abnormal	○	2	Instant resume	Limited to 75%	No stop	—		Stop	otate sensor abnormal, pulse area abnormal etc.	
P0016			Main sub,sensor phase shift failure	○	1	Instant resume	No limit	No stop	—		—		
P0340		12	Sub rotate sensor failure	○	1	Instant resume	No limit	No stop	—		—	ub rotate sensor failure, harness abnorma	Starting characteristics becomes slightly worse.
P0341			Sub rotate sensor pulse abnormal	○	1	Instant resume	No limit	No stop	—		—	tate sensor abnormal, pulse area abnorm	
P0088	Supply pump system	69	Commonrail abnormal hi pressure (1st step)	○	1	After IG-OFF	No limit	No stop	—		—		
P0088		69	Commonrail abnormal hi pressure (2nd step)	○	1	After IG-OFF	No limit	No stop	—		—		
P0088		76	Commonrail pressure hi pressure abnormal	○	1	After IG-OFF	No limit	No stop	—		—		
P0087		76	Commonrail pressure under abnormal	○	2	After IG-OFF	Limited to 75%	No stop	No Regeneration		Stop		
P0629		75	Supply pump sol v. 1failure (no press.feed)	○	3	After IG-OFF	Limited to 75%	No stop	No Regeneration		Stop	S C V short (＋B)	Half of cylinders do not inject and output is decreased accordingly.
P0628		73	Supply pump sol v. 1failure (All delivery)	○	2	After IG-OFF	Limited to 75%	No stop	—			S C V drive system abnormal	
P2635		76	Supply pump replace	—	1	After IG-OFF	No limit	No stop	—				
P1211	Injector system	68	Injector common 1 failure (GND short)	○	3	After IG-OFF	No limit	No stop	No Regeneration		Stop	Injector×3 failed. Or injector power harness abnormal	No output limit. Inject inself is decreased into half, reduced cylinder running and speed variation becomes large.
P1214			Injector common 2 failure (GND short)	○	3	After IG-OFF	No limit	No stop	No Regeneration		Stop		
P1212			Injector common 1 failure (VB short, open)	○	3	After IG-OFF	No limit	No stop	No Regeneration		Stop		
P1215			Injector common 2 failure (VB short, open)	○	3	After IG-OFF	No limit	No stop	No Regeneration		Stop		
P0201	Injector system	61	Injector 1 wire breaking	○	2	After IG-OFF	Limited to 75%	No stop	No Regeneration		Stop	injector failed or injector harness abnormal (intake side)	No output limit. Failed cylinder does not inject and output is decreased accordingly.
P0202		62	Injector 2 wire breaking	○	2	After IG-OFF	Limited to 75%	No stop	No Regeneration		Stop		
P0203		63	Injector 3 wire breaking	○	2	After IG-OFF	Limited to 75%	No stop	No Regeneration		Stop		
P0204		64	Injector 4 wire breaking	○	2	After IG-OFF	Limited to 75%	No stop	No Regeneration		Stop		
P0205		65	Injector 5 wire breaking	○	2	After IG-OFF	Limited to 75%	No stop	No Regeneration		Stop		
P0206		66	Injector 6 wire breaking	○	2	After IG-OFF	Limited to 75%	No stop	No Regeneration		Stop		

SAE code	System	TCCS digit code	Function	Check Lamp ON	Failure Level	Resume Timing	Injection volume limit	Engine Stop action	D P F Regeneration control	Failure judging condition	EGR Motion	Cause of failure	Remark
P0263	Injector system	61	Inter-cylinder Caribration errer ＃1	—	1	After IG-OFF	No limit	No stop	—		—	Intercylinder carbration abnormal or flow dumper actuation	
P0266		62	Inter-cylinder Caribration errer ＃2	—	1	After IG-OFF	No limit	No stop	—		—		
P0269		63	Inter-cylinder Caribration errer ＃3	—	1	After IG-OFF	No limit	No stop	—		—		
P0272		64	Inter-cylinder Caribration errer ＃4	—	1	After IG-OFF	No limit	No stop	—		—		
P0275		65	Inter-cylinder Caribration errer ＃5	—	1	After IG-OFF	No limit	No stop	—		—		
P0278		66	Inter-cylinder Caribration errer ＃6	—	1	After IG-OFF	No limit	No stop	—		—		
P0234	Turbo	34	Turbo over boost	○	3	Instant resume	Limited to 50%	No stop	—		—	Over boost　Turbo failure	
P0045	V N T System	35	VNT actuator failure 1 (major failure)	○	3	After IG-OFF	20%＋rotate contro	No stop	—	Failure info. Received from VNT controller	—	Major failure may highly cause VNT drive area sticking. Or failure of stuck.	
			VNT actuator failure 2 (minor failure)	○	2	After IG-OFF	Limited to 75%	No stop	—		—		
P00AF			VNT CONTROLLER FAILURE 1 (MAJOR FAILURE)	○	3	After IG-OFF	20%＋rotate contro	No stop	—		—		
			VNT CONTROLLER FAILURE 2 (MAJOR FAILURE)	○	2	After IG-OFF	Limited to 75%	No stop	—		—		
P0611	E C U Main body system	71	ECU CHARGE CIRCUIT FAILURE (Lo)	○	3	After IG-OFF	Limited to 75%	No stop	No Regeneration		Stop	ECU failure　Affecting engine control	
P0200			ECU CHARGE CIRCUIT FAILURE (Hi)	○	2	After IG-OFF	Limited to 75%	No stop	No Regeneration		Stop		
P0605		3	Flash ROM abnormal	○	2	After IG-OFF	Limited to 75%	No stop	No Regeneration		—		
P0606			CPU failure (Hard detect)	○	3	Instant resume	Forcible stop	Stop	—		—		
P0607			CPU monitor IC abnormal	○	3	Instant resume	Limited to 75%	No stop	No Regeneration		Stop		
P1601		2	QR code failure	○	1	Instant resume	No limit	No stop	—		—		
P2100	Intake air orfice valve	31	DC motor wrte breakage drive duty wire breaka	○	1	After IG-OFF	No limit	No stop	—		—	ecting to temp. rise at manual regenerat	Intale throttle full open
P2103			DC motor, GND short	○	3	After IG-OFF	Limited to 50%	No stop	—		Stop		
P2101			Intake air orifice sensor sticking	○	3	After IG-OFF	Limited to 50%	No stop	—		Stop		
P0122		32	Intake air orifice opening sensor failure (Lo)	○	3	After IG-OFF	Limited to 50%	No stop	—	＜0.20V	—		
P0123			Intake air orifice opening sensor failure (Hi)	○	3	After IG-OFF	Limited to 50%	No stop	—	＞4.80V	—		
P1458	E G R related	81	EGR system failure 1 (major failure)	○	2	After IG-OFF	Limited to 75%	No stop	No Regeneration		Stop	EGR close order, but may be stuck	
P1459			EGR system failure 2 (major failure)	○	2	After IG-OFF	Limited to 75%	No stop	—		Stop	EGR close order but close valve stuck	
P06D3	Air flow sensor	5	Air flow sensor power (+B)	—	1	Instant resume	No limit	No stop	—		—		
P06D4			Air flow sensor power (GND)	—	1	Instant resume	No limit	No stop	—		—		
P0104		17	Air flow sensor abnormal 1 (High frequend)	○	2	After IG-OFF	Limited to 75%	No stop	—	＜0.85kHz	Stop		
P0104			Air flow sensor abnormal 2 (Low frequend)	○	2	After IG-OFF	Limited to 75%	No stop	—	＞9.80kHz	Stop		
P0112	Intake air sensor	17	Intake air temp. sensor abnormal (Low)	○	1	Instant resume	No limit	No stop	—	＜0.06V			
P0113			Intake air temp. sensor abnormal (High)	○	1	Instant resume	No limit	No stop	—	＞4.55V			
P200C	DPF related	91	D P F meltdown failure 1	○	1	DPF-reset	No limit	No stop	—		—		Failure resume need reset of DPF internal info with special tool. Use of tool requiews sparate leveling
P244A			D P F meltdown failure 2	○	3	DPF-reset	Limited to 50%	No stop	—		—		
P2463		92	D P F abnormal clog 1	○	3	DPF-reset	Limited to 50%	No stop	—		—		
P244B			D P F abnormal clog 2	○	3	DPF-reset	Limited to 50%	No stop	—		—		
P2458		93	DPF catalyst detedeterioration 1	○	3	DPF-reset	Limited to 50%	No stop	No Regeneration		—		
P24A2			DPF catalyst detedeterioration 2	○	3	DPF-reset	Limited to 50%	No stop	No Regeneration		—		
P1427	Pressure difference sensor system	28	Pressure difference sensor abnormal (Lo)	○	3	After IG-OFF	Limited to 50%	No stop	—	＜0.50V	—		
P1428			Pressure difference sensor abnormal (Hi)	○	3	After IG-OFF	Limited to 50%	No stop	—	＞4.46V	—		
P0545	Exhaust air temp. system	27	Exhaust air temp. sensor1 abnormal (Lo)	○	1	Instant resume	No limit	No stop	No Regeneration	＜0.06V	—		
P0546			Exhaust air temp. sensor1 abnormal 1 (Hi)	○	1	Instant resume	No limit	No stop	No Regeneration	＞4.96V	—		
P2032			Exhaust air temp. sensor1 abnormal 2 (Lo)	○	1	Instant resume	No limit	No stop	—	＜0.06V	—		
P2033			Exhaust air temp. sensor1 abnormal 2 (Hi)	○	1	Instant resume	No limit	No stop	—	＞4.96V	—		
P0642	Sensor voltage system	5	Sensor power 1 abnormal (Lo)	—	1	Instant resume	No limit	No stop	—		—		This occurs at same time with other failure. Power system check as major cause may help
P0643			Sensor power 1 abnormal (Hi)	—	1	Instant resume	No limit	No stop	—		—		
P0652			Sensor power 2 abnormal (Lo)	—	1	Instant resume	No limit	No stop	—		—		
P0653			Sensor power 2 abnormal (Hi)	—	1	Instant resume	No limit	No stop	—		—		

SAE code	System	TCCS digit code	Function	Check Lamp ON	Failure Level	Resume Timing	Injection volume limit	Engine Stop action	D P F Regeneration control	Failure judging condition	EGR Motion	Cause of failure	Remark
P0540	Vehicle system	53	Pre-heating device failure	O	1	Instant resume	No limit	No stop	–		–	Pre-heating device (Shoprt +B, GND)	
P0686	Vehicle system	51	Main relay failure	O	1	Instant resume	No limit	No stop	–		–	Power system failure	
P0219	Vehicle system	7	Engine over run	O	1	Instant resume	No limit	No stop	–		–	Over run	Intake throttle full close
P0617	Vehicle system	45	Starter switch failure	–	1	Instant resume	No limit	No stop	–		–	Switch failure (Shorted continuously)	Low temp strting worsen
U1001	Transmission related	9	CAN1 failure	O	1	After IG-OFF	No limit	No stop	–		–		
U110A			Transmission lost_TSC1 (Isolation command)	O	1	After IG-OFF	No limit	No stop	–		–		
U0073		8	CAN2 failure	O	3	After IG-OFF	Limited to 50%	No stop	No Regeneration		Stop		
U1122			Transmission lost_ E G R	O	2	After IG-OFF	Limited to 75%	No stop	–		Stop		
U1123			Transmission lost_ V N T	O	3	After IG-OFF	Limited to 50%	No stop	No Regeneration		–		

*How to output diag. code
1. SAE code : This is output when failure is confirmed with failure diagnosis. Failure code is indicated on present and past.
Past failure can be erased only with failure diagnosis tool.

2. 2 digit code : Check for blinking number of engine check clamp.
Present error only is indicated. (Past failure can not be seen)

3. Indication of failure code : Failure code is indicated in sequence from smaller number of failure codes repeatedly.
The below shows example of diag. code indication.
(Upper … Code 32 and code 21 are indicated. Lower … normal case.)

Reference Only

10.1.15 WARNING DISPLAY CONDITION

Code	Message	Condition, Action	Warning display condition
MC1-W01	ENGINE PREHEAT	The message is displayed when the engine cooling water temperature is 0 degrees or less with the key switch turned ON.	Indicate 5 seconds when the charging (MC1-B20) is in OFF condition with the engine preheating (MC1-B38) is ON (Approx. 24V).
MC1-W02	PREHEAT COMPLETED	The message is displayed for 5 seconds after the operation is complete.	Indicate 5 seconds when the charging (MC1-B20) becomes ON (Approx. 24V) after indicate “W01”.
MC1-W03	CHARGING PROBLEM	The charging circuit is malfunctioned. Consult with your nearest Manitowoc authorize distributor. * That it is not fault even this item is momentarily displayed immediately after the engine is started.	Indicate either the conditions of the engine oil pressure (MC1-B02) is OFF, the engine revolution is more than 100 min^{-1} with the charging (MC1-B20) is OFF or the engine oil pressure (MC1-B02) is ON (=GND), the actual engine revolution is less than 100 min^{-1} with the charging (MC1-B20) is ON (Approx. 24V) condition.
MC1-W04	PILOT RESSURE (PRIMARY) ABNORMAL	The control primary pressure is abnormal. Stop the operation at once, and consult with your nearest Manitowoc authorize distributor. * That it is not fault even this item is momentarily displayed immediately after the engine is started.	Indicate either the conditions of the engine oil pressure (MC1-B02) is OFF, the charging (MC1-B20) is ON (Approx. 24V) with the control primary pressure (MC1-A12) is less than 4.4 MPa or the engine oil pressure (MC1-B02) is ON (=GND), the charging (MC1-B20) is OFF with the control primary pressure (MC1-A12) is exceeding 4.4 MPa.
MC1-W05	ENGINE OIL PRESSURE	The engine oil pressure is abnormal. Stop the engine at once, and consult with your nearest Manitowoc authorize distributor.	Indicate either the conditions of the charging (MC1-B20) is ON (Approx. 24V), the actual engine revolution is more than 100 min^{-1} with the engine oil pressure (MC1-B02) is ON (=GND) or the charging (MC1-B20) is OFF, the actual engine revolution is less than 100 min^{-1} with the engine oil pressure (MC1-B02) is in OFF condition.
MC1-W06	ENGINE WATER LEVEL	The cooling water level in the radiator is insufficient. Refill the radiator with cooling water.	Indicate when the cooling water level (MC1-B08) is in ON (=GND) condition with the engine is stopping.
MC1-W08	ENGINE COOLANT TEMPERATURE	The cooling water temperature is excessively high. Idle the engine to lower temperature, and consult with your nearest Manitowoc authorize distributor.	Indicate when the cooling water temperature is exceeding 105°C (221°F).
MC1-W09	ENGINE OIL FILTER	The engine oil filter is clogged. Replace the filter.	Indicate when the engine oil filter clogging (MC1-B09) is ON (=GND) condition.

Reference Only

Code	Message	Condition, Action	Warning display condition
MC1-W10	ENGINE AIR FILTER	The engine air cleaner is clogged. Clean or replace the element.	Indicate when the air cleaner filter clogging (MC1-B04) is ON (=GND) condition.
MC2-W11	EMPTY FUEL	The fuel level is insufficient. Refuel.	Indicate when the fuel level is less than 5% of the tank capacity condition.
MC1-W12	HYDRAULIC OIL TEMPERATURE	The hydraulic oil temperature is excessively high. Adjust the engine speed to the medium level to lower the oil temperature, and consult with your nearest Manitowoc authorize distributor.	Indicate when the hydraulic oil temperature (MC1-A10) is exceeding 90°C (194°F) condition and release becomes less than 80°C (176°F).
MC1-W13	FRONT WINCH COOLING CIRCUIT OIL TEMPERATURE	The temperature of clutch cooling oil of the front drum is excessively high. Idle the engine at a high speed to lower the oil temperature. If this item frequently appears during normal operations, consult with your nearest Manitowoc authorize distributor. At the same time, inform the Manitowoc service of the details of the operation (lifting load, free fall distance, speed, and duration).	Indicate when the main winch brake cooling oil temperature (MC1-B06) is ON condition.
MC1-W14	REAR WINCH COOLING CIRCUIT OIL TEMPERATURE	The temperature of clutch cooling oil of the front drum is excessively high. Idle the engine at a high speed to lower the oil temperature. If this item frequently appears during normal operations, consult with your nearest Manitowoc authorize distributor. At the same time, inform the Manitowoc service of the details of the operation (lifting load, free fall distance, speed, and duration).	Indicate when the auxiliary winch brake cooling oil temperature (MC1-B07) is ON condition.
MC1-W15	WINCH FILTER CLOGGED	The winch cooling line filter is clogged. Replace the filter cartridge. This item may appear during cold weather even when the filter is not clogged. If the item disappear during warm-up, the cartridge does not need to be replaced.	Indicate when the cooling line filter (MC1-B37) is ON (=GND) condition with the condition of either the engine oil pressure (MC1-B02) is OFF or charging (MC1-B20) is ON (Approx. 24V).

Reference Only

Code	Message	Condition, Action	Warning display condition
MC1-W16	FRONT SAFETY ESM SOLENOID VALVE IS ENERGIZED	The front drum clutch emergency system is actuated. The free fall of the front drum cannot be normally performed. Place a load and the hook onto the ground, and turn the key switch to the OFF position. Then, consult your nearest Manitowoc authorize distributor. DO NOT operate the key switch with a load or the hook hung in the air, since it may cause drop of the load or the hook.	Indicate when the ESM-SOL is operating. • The conditions of operating the ESM (operate either 1 or 2 below is realized). 1. The main winch clutch pressure (MC1-A21) is less than 3.73 MPa (Approx. 1.26V) with the condition of the engine oil pressure (MC1-B02) is OFF at the brake mode is selected. 2. The main winch clutch pressure is less than 3.73 MPa (Approx. 1.26V) while the lever is manipulating with the free mode is selected.
MC1-W17	REAR SAFETY ESA SOLENOID VALVE IS ENERGIZED	The front drum clutch emergency system is actuated. The free fall of the front drum cannot be normally performed. Place a load and the hook onto the ground, and turn the key switch to the OFF position. Then, consult your nearest Manitowoc authorize distributor. DO NOT operate the key switch with a load or the hook hung in the air, since it may cause drop of the load or the hook.	Indicate when the ESA-SOL is operating. • The conditions of operating the ESA (operate either 1 or 2 below is realized). 1. The auxiliary winch clutch pressure (MC1-A22) is less than 3.73 MPa (Approx. 1.26V) with the condition of the engine oil pressure (MC1-B02) is OFF at the brake mode is selected. 2. The auxiliary winch clutch pressure is less than 3.73 MPa (Approx. 1.26V) while the lever is manipulating with the free mode is selected.
MC1-W18	3RD SAFETY EST SOLENOID VALVE IS ENERGIZED	The front drum clutch emergency system is actuated. The free fall of the front drum cannot be normally performed. Place a load and the hook onto the ground, and turn the key switch to the OFF position. Then, consult your nearest Manitowoc authorize distributor. DO NOT operate the key switch with a load or the hook hung in the air, since it may cause drop of the load or the hook.	Indicate when the EST-SOL is operating. • The conditions of operating the EST (operate either 1 or 2 below is realized). 1. The third winch clutch pressure (MC1-A22) is less than 3.73 MPa (Approx. 1.26V) with the condition of the engine oil pressure (MC1-B02) is OFF at the brake mode is selected. 2. The auxiliary winch clutch pressure is less than 3.73 MPa (Approx. 1.26V) while the lever is manipulating with the free mode is selected.
MC1-W19	HOOK OVER HOIST RELEASE SWITCH IS OPERATING	The hook overhoist automatic stop release switch is actuated.	When hook over hoist limit is released.
MC1-W20	BOOM OVER HOIST RELEASE SWITCH IS OPERATING	The boom overhoist automatic stop release switch is actuated.	When boom over hoist limit is released.

Reference Only

Code	Message	Condition, Action	Warning display condition
MC2-W21	ML BYPASS SWITCH IS OPERATING	The moment limiter redundancy switch is actuated. The moment limiter is malfunctioned, and automatic stop operation due to overload and the overhoisted hook block is impossible. Immediately stop the operation, or return extremely carefully, and consult with your nearest Manitowoc authorize distributor.	Indicate when the ML becomes bypass (MC2-B53, B54) is ON (Approx. 24V) condition.
MC1-W22	DPF OPTION SETTING ABNORMAL	Option setting dose not match with engine spec. Contact Manitowoc service shop.	Indicate when either 1 or 2 below is realized. 1. When the signal of “none DPF equipped” is receiving (CAN) from the ECU with the area (Regulated area) where the DPF is optional (option setting : ○). 2. When the signal of “none DPF equipped” is not receiving while the DPF option setting is “X”.
MC1-W23	FRONT DRUM ROTATION SENSOR ADJUSTMENT	Front drum rotation sensor is not functioning properly. Adjust sensor position. If not corrected even after adjustment, contact Manitowoc service shop.	Indicate when more than continuous 5 times failure of the detection is occurred of the interruption by the main winch rotation sensor during the main winch operating lever back to neutral position after more than 3 seconds manipulated the lever. Release when detect the interruption by the main winch rotation sensor while the main winch lever is manipulating.
MC1-W24	REAR DRUM ROTATION SENSOR ADJUSTMENT	Rear drum rotation sensor is not functioning properly. Adjust sensor position. If not corrected even after adjustment, contact Manitowoc service shop.	Indicate when more than continuous 5 times failure of the detection is occurred of the interruption by the auxiliary winch rotation sensor during the auxiliary winch operating lever back to neutral position after more than 3 seconds manipulated the lever. Release when detect the interruption by the auxiliary winch rotation sensor while the auxiliary winch lever is manipulating.
MC2-W31	FRONT DRUM NEGA BRAKE ABNORMAL	Front drum nega brake function may be abnormal. Contact Manitowoc service shop.	Indicate when detect the drum rotation after following conditions are realized. • The main winch lever is more than 1 second in neutral position. • The mode selection is in main neutral brake made. • No occurrence of the main rotation sensor adjustment (W23).

Reference Only

Code	Message	Condition, Action	Warning display condition
MC2-W32	REAR DRUM NEGA BRAKE ABNORMAL	Rear drum nega brake function may be abnormal. Contact Manitowoc service shop.	Indicate when detect the drum rotation after following conditions are realized. • The auxiliary winch lever is more than 1 second in neutral position. • The mode selection is in auxiliary neutral brake made. • No occurrence of the auxiliary rotation sensor adjustment (W24).
MC2-W33	3RD. DRUM NEGA BRAKE ABNORMAL	3rd. drum nega brake function may be abnormal. Contact Manitowoc service shop.	Indicate when detect the drum rotation after following conditions are realized. • The third winch lever is more than 1 second in neutral position. • The mode selection is in third neutral brake made. • No occurrence of the third rotation sensor adjustment (W25).
MC1-W35	BATTERY RELAY ABNORMAL	Battery relay contact may be adhered. Inspect battery relay. Replace if the deposited at the contact point of the relay.	Indicate when the controller power dose not trip after the battery relay (MC1-C15) is OFF condition with the main key is ON at AIS (Auto Idle Stop) situation.
MC1-W36	PROPEL LEVER INTERLOCKED	Propel (travel) lever is kept ON. Pilot pressure is cut. Return propel (travel)lever back to neutral.	Indicate when the propel (travel) lever is kept manipulating (MC1-B36) position with the function lever (MC1-B19) is ON (Approx. 24V) while this option is effective.
MC2-W37	FRONT DRUM LEVER INTERLOCKED	Front drum is stopped since front drum lever is kept ON. Return front drum lever back to neutral.	Indicate when the main winch lever is in manipulating position at the function lever (MC1-B19) becomes ON (Approx. 24V).
MC2-W38	REAR DRUM LEVER INTERLOCKED	Rear drum is stopped since rear drum lever is kept ON. Return rear drum lever back to neutral.	Indicate when the auxiliary winch lever is in manipulating position at the function lever (MC1-B19) becomes ON (Approx. 24 V).
MC2-W39	3RD. DRUM LEVER INTERLOCKED	3rd. drum is stopped since 3rd. drum lever is kept ON. Return 3rd. drum lever back to neutral.	Indicate when the third winch lever is in manipulating position at the function lever (MC1-B19) becomes ON (Approx. 24V).
MC2-W40	BOOM DRUM LEVER INTERLOCKED	Boom drum is stopped since boom drum lever is kept ON. Return boom drum lever back to neutral.	Indicate when the boom winch lever is in manipulating position at the function lever (MC1-B19) becomes ON (Approx. 24V).
MC1-W41	REMOTE CONTROLLER CONNECTED	Remote control is connected. Disconnect remote control for crane work.	Indicate when the remote-control is connected (MC1-B53 is ON : more than 24V) and the engine emergency stop (MC1-B23) is ON (Approx. 24V) → Monitor lamp is also lit.

Reference only

Code	Message	Condition, Action	Warning display condition
MC1-W42 MC2-W42	MC1, 2 CHARGE SIGNAL ABNORMAL	Charge signal differs on each MC. Contact Manitowoc service shop.	Indicate when the charging conditions of MC1 and MC2 (MC1-B20, MC2-B20) are not identical.
MC1-W44 MC2-W44	MC1, 2 FUNCTION LOCK SIGNAL ABNORMAL	Function lock signal differs on each MC. Contact Manitowoc service shop.	Indicate when the function lever conditions of MC1 and MC2 (MC1-B19, MC2-B19) are not identical.
MC1-W45 MC2-W45	MC1, 2 INCHING SPEED SELECT SIGNAL ABNORMAL	Inching speed select signal differs on each MC. Contact Manitowoc service shop.	Indicate when the inching switch conditions of MC1 and MC2 (MC1-B21, MC2-B21) are not identical.
MC1-W46	Qmax CUT SOL OUTPUT OFF ABNORMAL	Qmax cut solenoid relay contact is adhered at energize side. The engine revolution will be restricted not to raising the maximum revolution. Contact Manitowoc service shop.	Indicate when either following condition is realized. • MC1-B52 signal is ON (Approx. 24V) at the Qmax Cut (MC1-C11) is OFF. • Qmax Cut pressure (MC1-A16) is less than 3 MPa (Approx. 0.74V).
MC1-W47	Qmax CUT SOL OUTPUT ON ABNORMAL	Qmax cut solenoid relay is not functioned. The engine revolution will be restricted not to raising the maximum revolution. Contact Manitowoc service shop.	Indicate when either following condition is realized. • MC1-B52 signal is OFF at the Qmax Cut (MC1-C11) is ON. • Qmax Cut pressure (MC1-A16) is more than 3 MPa (Approx. 0.74V). • Exceeding the engine revolution upper limit. (J08E : more than 1,800 min^{-1}, P11C : more than 1,600 min^{-1})
MC1-W48	ACTUAL ROTATION IS HIGHER THAN NO LOAD ROTATION	Either front or rear winch motor is running over speed or engine speed is over. Contact Manitowoc service shop.	Indicate when either following condition is realized. • Exceeding the engine revolution upper limit with the G engine mode is selected. (J08E : more than 1,800 min^{-1}, P11C : more than 1,600 min^{-1}) • Detect the main or auxiliary drum over speed rotation when the neutral brake is selected. (More than 115% of specified rotation speed.)
MC1-W49	HIGH LOAD TORQUE	The engine reached to the maximum torque situation, be sure, there is a possibility of stopping the engine by further engine load due to the abrupt operation is taken. Avoid abrupt lever operation and work with the care. Although the warning will be released by decline the engine load, if frequently happen it, there is a possibility of clogging the fuel filter, recommend replace the filter earlier.	Indicate the present output torque is reached to 90% or more against the engine owning maximum torque as called 100%. Instruct the operator not to taking abrupt operation to avoid sudden loading.

Reference Only

Code	Message	Condition, Action	Warning display condition
MC1-W50	JOY STICK ABNORMAL	Joy stick accel switch exceeds neutral range. Return it to neutral position. If error continues even at neutral position, contact Manitowoc service shop.	Indicate when following condition is realized. When the acceleration voltage (MC1-A09) is out of neutral position (without adjustment value : 2.4V to 2.6V) at the engine started.
MC1-W51	BACK UP FUSE BLOWN OUT	Back up fuse (F-4) of each controller is blown off. Replace with new one.	Indicate the backup fuse (MC1-B40) becomes OFF.
MC2-W52	HOOK OVERHOIST LS	MC2 detects hook overhoist. Check ML or hook overhoist signal and then contact Manitowoc service shop.	Indicate when detecting the hook overhoist (MC2-B24, B25) is OFF on MC2 while ML is not detecting (not to light up the warning lamp on ML).
MC2-W53	BOOM OVERHOIST LS	MC2 detects boom overhoist. Check ML or boom overhoist signal and then contact Manitowoc service shop.	Indicate when detecting the boom overhoist (MC2-B13) is OFF on MC2 while ML is not detecting (not to light up the warning lamp on ML).
MC2-W54	JIB OVERHOIST LS	MC2 detects jib overhoist. Check ML or jib overhoist signal and then contact Manitowoc service shop.	Indicate when detecting the jib over hoist (MC2-B35) is OFF on MC2 while ML is not detecting (not to light up the warning lamp on ML).
MC2-W55	BOOM BACKSTOP No.1 LS	MC2 detects boom backstop No.1 overhoist. Check ML or boom backstop No.1 overhoist signal and then contact Manitowoc service shop.	Indicate when detecting the boom backstop No.1 (MC2-B14) is OFF on MC2 while ML is not detecting (not to light up the warning lamp on ML).
MC2-W56	BOOM BACKSTOP No.2 LS	MC2 detects boom backstop No.2 overhoist. Check ML or boom backstop No.2 overhoist signal and then contact Manitowoc service shop.	Indicate when detecting the boom backstop No.2 (utmost limit) (MC2-B15) is OFF on MC2 while ML is not detecting (not to light up the warning lamp on ML).

Reference Only

Code	Message	Warning display condition
ME001	Out of working angle.	When press boom/jib lowering icon.
ME002	Hook over hoist release switch is operating.	When hook over hoist limit is released.
ME003	Boom/Jib over hoist release switch is operating.	When boom over hoist limit is released.
ME004	Overload release switch is operating.	When overload release switch is released.
ME005	Over load condition.	When load ratio becomes more than 100%.
ME006	Head wind is strong.	When boom/jib suspending tension drops while the boom/jib is raising.
ME007	Boom is lowered too much.	When boom reaches lowest angle limit.
ME008	Boom is raised too much.	When boom reaches high angle limit or boom over hoist limits are functioning.
ME011	Boom is lowered too much.	When boom reaches low angle limit.
ME012	Boom is raised too much.	When boom reaches high angle limit.
ME013	Jib is lowered too much.	When jib reaches low angle limit.
ME014	Jib is raised too much.	When jib reaches high angle limit.
ME015	Mast is raised too much.	When mast reaches high angle limit while lifting by mast.
ME016	Mast is lowered too much.	When mast reaches low angle limit while lifting by mast.
ME017	Hook over hoist.	When detect hook over hoist limit switch (ML-A01, A02) function.
ME018	Hook over hoist.	When detect hook over hoist limit switch (ML-A01, A02) function.
ME019	Mast cylinder limit switch has not been turned on.	When not detect mast cylinder limit switch (ML-B12) signal.
ME020	Detecting limit switch for high gantry position has not been turned on.	When not detect high gantry limit switch (ML-B12) signal.
ME021	Boom over hoist.	When boom reaches high angle limit.
ME022	Jib over hoist.	When jib reaches high angle limit.
ME024	Overload precautions.	When reaches overload precaution area. (Load ratio get into more than 90 to less than 100%).
ME025	Reached the load limitation value of WORKING AREA LIMIT function.	When reaches to lifting load set value for work area limit.
ME026	Reached 90% of the load limitation value of WORKING AREA LIMIT function.	When reaches to 90% of lifting load set value for work area limit.
ME027	Boom angle reached upper limitation value of WORKING AREA LIMIT function.	When boom reaches high set angle limit for work area limit.
ME028	Boom angle reached lower limitation value of WORKING AREA LIMIT function.	When boom reaches low set angle limit for work are limit.
ME029	Jib angle reached upper limitation value of WORKING AREA LIMIT function.	When jib reaches high set angle limit for work area limit.
ME030	Jib angle reached lower limitation value of WORKING AREA LIMIT function.	When jib reaches low set angle limit for work area limit.
ME031	Working radius reached limitation value of WORKING AREA LIMIT function.	When reaches working radios set value for work area limit.

Reference Only

Code	Message	Warning display condition
ME032	Boom point elevation reached limitation value of WORKING AREA LIMIT function.	When reaches boom point height set value for work area limit.
ME033	Jib point elevation reached limitation value of WORKING AREA LIMIT function.	When reaches jib point height set value for work area limit.
ME034	Crane configuration setting is wrong.	When read internal memory abnormally.
ME035	A moment real load exceeds minimum value.	When detect indefinite load while boom/jib lowering icon is actuated.
ME036	The malfunction of the load cell for the boom (1).	When occurs port error (ML-A1).
ME037	The malfunction of the load cell for the boom (2).	When occurs port error (ML-A2).
ME038	The malfunction of the load cell for the jib (1).	When occurs port error (ML-A3).
ME039	The malfunction of the load cell for the jib (2).	When occurs port error (ML-A4).
ME040	The malfunction of the load cell for the main hook.	When occurs port error (ML-A5).
ME041	The malfunction of the load cell for the aux. hook.	When occurs port error (ML-A6).
ME042	The malfunction of the load cell for the 3rd hook.	When occurs port error (ML-A7).
ME044	The malfunction of the boom base angle sensor.	When occurs port error (ML-A9).
ME045	The malfunction of the boom tip angle sensor.	When occurs port error (ML-A10).
ME046	The malfunction of the mast angle sensor.	When occurs port error (ML-A11 or ML-A12).
ME047	The trouble of the lower jib angle sensor.	When occurs port error (ML-A13)
ME048	The malfunction of the jib tip angle sensor.	When occurs port error (ML-A14).
ME049	CEN Option setting error	When mismatch between CEN option setting and CEN specification recognition (ML-B29).
ME050	Test Mode	When converting test mode for EN13000.
ME051	Options unmatch of civil engineering mode.	When setting of civil engineering works option mode is wrong.
ME052	Data unmatch of civil engineering mode.	When mismatch between selected posture and condition of mode select switch.
ME056	Inspection mode for overload condition.	When actuate overload testing icon. (on the monitor display)
ME058	Set the swing brake mode.	When setting of swing limit with swing free mode. Apply swing parking brake and shift to swing brake mode.
ME060	Boom over hoist.	When boom reaches high angle limit.
ME061	Jib winch wire rope is tightened a little more than normal.	When detect suspending tension between 5 to 8 tons at tower configuration with boom/jib lowering icon is actuated.
ME062	Jib winch wire rope is abnormally tightened.	When detect suspending tension more than 8 tons at tower configuration with boom/jib lowering icon is actuated.
ME063	ML crane configuration does not correspond to the counter weight detecting signal.	When mismatch between detected value and selected posture of counter-weight.
ME066	Danger!! The jib tip touches at the ground.	When detect tower jib prevention limit switch from bending.
ME067	Boom winch wire rope is abnormally tightened.	When detect tension to mast more than 5 tons.

Reference Only

Code	Message	Warning display condition
ME068	Writing error of operator identification ID and/or password.	When write account information fail.
ME069	Writing error of WORKING AREA LIMIT values.	When write setting information of work area limit fail.
ME081	Front winch over pay out	When detect over pay-out No. 1 limit switch signal.
ME082	Rear winch over pay out	When detect over pay-out No. 2 limit switch signal.
ME083	Third winch over pay out	When detect over pay-out No. 3 limit switch signal.
ME084	Lateral inclination is out of range.	When detect inclination exceed more than ±0.2 degrees.
ME085	Longitudinal inclination is out of range.	When detect inclination exceed more than ±0.2 degrees.
ME086	MC1 redundancy switch is operating.	When input MC1 bypass switch (ML-B19).
ME087	MC2 redundancy switch is operating.	When input MC2 bypass switch (ML-B20).
ME088	Connect the weight	When reduced weight specification, detect abnormal of weight.
ME089	Time out error of synchronizing check during the MC1 start-up process.	When not synchronized with MC1 at boot-up. MC1 fault or CAN communication failure.
ME090	Time out error of synchronizing check during the MC2 start-up process.	When not synchronized with MC2 at boot-up. MC2 fault or CAN communication failure.
ME092	Error No.1 of ML internal setting values abnormality. (Optional item setting)	When read option information fail. *1
ME093	Error No.2 of ML internal setting values abnormality. (Crane data)	When read crane date fail. *1
ME094	Error No.3 of ML internal setting values abnormality. (Manufacturer adjustment data)	When read manufacture adjustment data fail. *1
ME095	Error No.4 of ML internal setting values abnormality. (Temporary adjustment data)	When read user adjustment data fail. *1
ME096	Error No.5 of ML internal setting values abnormality. (Crane operation data)	When read operation data fail. *1
ME097	Error No.6 of ML internal setting values abnormality. (Data for each case)	When read option information fail. *1
ME099	Error No.8 of ML internal setting values abnormality. (Failure history data)	When read load/fault history data fail. *1
ME100	Writing error of optional item setting.	When write option information fail.
ME101	Writing error of crane data.	When write crane date fail.
ME102	Writing error of manufacturer adjustment data.	When write manufacture adjustment data fail.
ME103	Writing error of temporary adjustment data.	When write user adjustment data fail.
ME104	Writing error of crane operation data.	When write operation data fail.
ME105	Writing error of the data of each case.	When write occasion demand data fail.
ME108	Error of the MC crane model number unmatched.	When mismatch machine model information between controllers. Resetting machine model require.
ME109	Error of the MC optional item setting unmatched.	When mismatch option information. Resetting option information require. *1

Reference Only

Code	Message	Warning display condition
ME110	Communication error between touch panel monitor.	When communication abnormal between ML monitor and ML.
ME111	Time out error of MC1 & MC2 adjustment response.	When time-out communication while MC adjustment. Readjustment require. *1
ME112	CAN communication error with MC1.	When CAN communication error between MC1 - ML.
ME113	CAN communication error with MC2.	When CAN communication error between MC2 - ML.
ME114	CAN communication sending error with MC1 & MC2.	When communication error with not accept adjustment. Faulty or check communication line.
ME115	Error No.9 of ML internal setting values abnormality. (Failure history data of MC1)	When read MC1 fault history data fail. *1
ME116	Error No.10 of ML internal setting values abnormality. (Failure history data of MC2)	When read MC2 fault history data fail. *1
ME117	Writing error of failure history data for MC1.	When write MC1 fault history data fail.
ME118	Writing error of failure history data for MC2.	When write MC2 fault history data fail.
ME119	Error No.11 of ML internal setting values abnormality. (Operator identification ID and/or password)	When read account information fail. *1
ME120	Error No.12 of ML internal setting values abnormality. (WORKING AREA LIMIT values)	When read work area limit set information fail.
ME121	Access error to NOR flash memory in ML. Setting values can not be written.	When NOR flash memory access faulty. *1
ME122	MC1 & MC2 reset is detected.	When reboot MC1 or MC2.
ME123	Writing error of system information for MC1 or MC2.	When read/write error MC system information. *1
ME124	Writing error of optional item setting for MC1 or MC2.	When write MC option information error.
ME125	Writing error of adjustment data for MC1 or MC2.	When read/write error MC adjustment information. *1
ME126	Writing error of crane operation data for MC1 or MC2.	When read/write error MC adjustment information. *1
ME127	Writing error of No.2. manufacturer adjustment data.	When write manufacture adjustment data 2 fail.
ME128	Error No.13 of ML internal setting values abnormality. (No.2 manufacturer adjustment data)	When read manufacture adjustment data 2 fail. *1

*1 Carry out machine model set, MC adjustment (option set etc.). Possibly controller failure if error can't be disappear.

Reference Only

10.1.16 ENGINE ECU

1. ECU terminal number

Engine sub harness connector no.
Connector A : Respond connector : CN-614

	1	2	3
4	5	6	7
	8	9	10
11	12	13	14

Connector B: Respond connector :CN-615

1	2	3	4
5	6	7	8
9	10	11	12
13	14	15	16

Connector C: Respond connector :CN-635

1

Connector D: Respond connector :CN-616

1	2	3	4
5	6	7	8
9	10	11	12

Connector E: Respond connector :CN-638

1	2	3	4
5	6	7	8

Reference Only

2. Input / output table

CONNECTOR A

Terminal No.	Ter. symbol	Content
1	VNTV EGRV +BF1 +BF2	VNT-EGR Power
2	VB1 to 4	ECU main power
3	ADG7	Work accel sensor GND
4	NUSW CLSW	Neutral SW Clutch SW
5	SSWS SWSS	Key SW Key SW-Spare
6	GRY1	Heatre relay
7	BATT	Battery
8	ASCS	Work accel sensor signal
9	AVC5	Work accel sensor power
10	PTOSW2	Recovery SW
11	OIL+	Hyd press. SW
12	VNTG EGRV CGD1 CGD2	VNT-EGR GND
13	PGD1 to 4	Power GND
14	REV	Reverse SW 1st
15	–	–
16	–	–

CONNECTOR B

Terminal No.	Ter. symbol	Content
1	–	Accel sensor 1 power
2	–	ALT-L
3	ST	Stater SW
4	PTO	Work accel sensor SW
5	DPF	DPR LT
6	DPSW	DPR SW
7	–	ALT-R
8	MRL1 MRL2	ECU Main relay
9		Engine check
10	CANIH	CAN HIGH
11	CAN1L	CAN LOW
12	STOP	Engine stop SW
13	ADG8	Accel sensor 2 GND
14	ACS2	Accel sensor 2 signal
15	ADG7	Accel sensor 1 GND
16	ACS1	Accel sensor 1 signal

CONNECTOR C

Terminal No.	Ter. symbol	Content
1		Grow plug
2	–	–
3	–	–
4	–	–
5	–	–
6	–	–
7	–	–
8	–	–
9	–	–
10	–	–
11	–	–
12	–	–
13	–	–
14	–	–
15	–	–
16	–	–

Reference Only

CONNECTOR D

Terminal No.	Ter. symbol	Content
1	THA+	AFM intake air temp sensor signal
2	AGD5	AFM intake air temp sensor GND
3	AFVB	AFM power
4	AGD6	AFM GND
5	ADG9	Press. Difference GND
6	EXPS	Press. Difference signal
7	AVC5	Press. Difference sensor power
8	AFSI	AFM Signal
9	ADG0	Exhaust air temp sensor 1 GND
10	ET3+	Exhaust air temp sensor 1 signal
11	ADG0	Exhaust air temp sensor 2 GND
12	ET4+	Exhaust air temp sensor 2 signal
13	–	–
14	–	–
15	–	–
16	–	–

CONNECTOR E

Terminal No.	Ter. symbol	Content
1	GRL	Grow lamp
2	CE/G	Engine check lamp
3	DGSW	Daig SW
4	THW+	Water themometer
5	–	ALT-P
6	–	ALT-L
7	–	ALT-R
8	–	–
9	–	–
10	–	–
11	–	–
12	–	–
13	–	–
14	–	–
15	–	–
16	–	–

Reference Only

10.2 LOAD SAFETY DEVICE

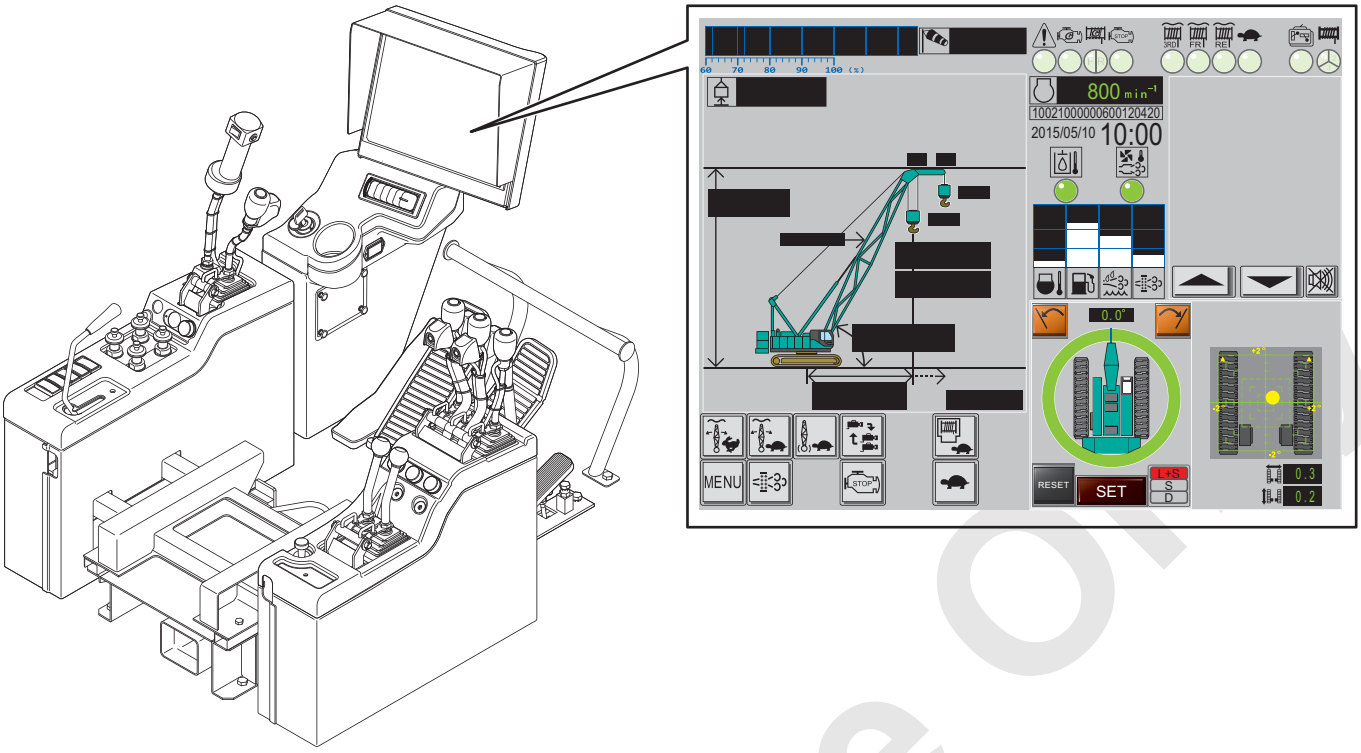

Note

All values in the monitor displays are for reference only.

Reference Only

10.2.1 CONFIGURATION OF SCREENS

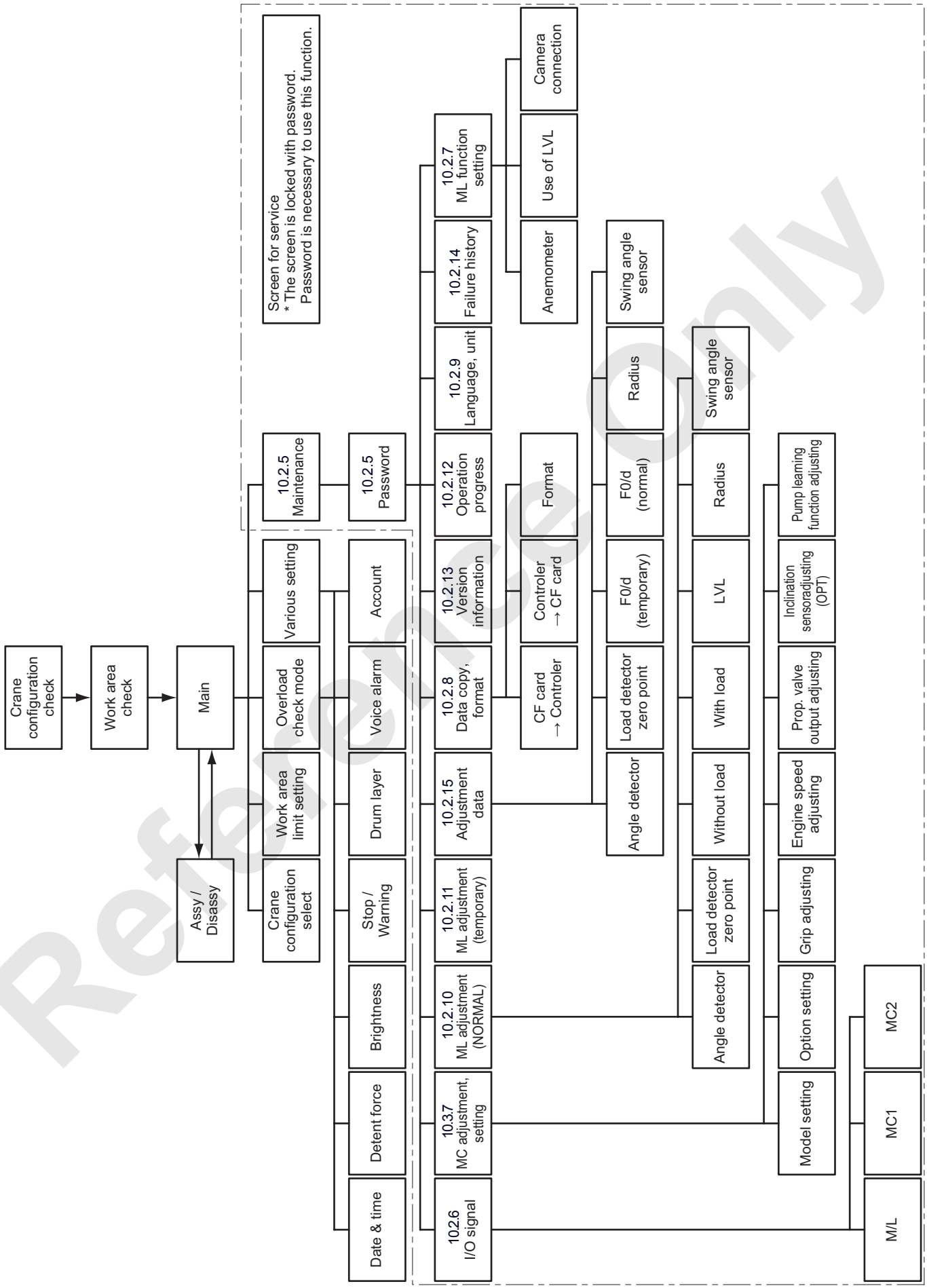

Reference Only

10.2.2 SYSTEM DAIGRAM

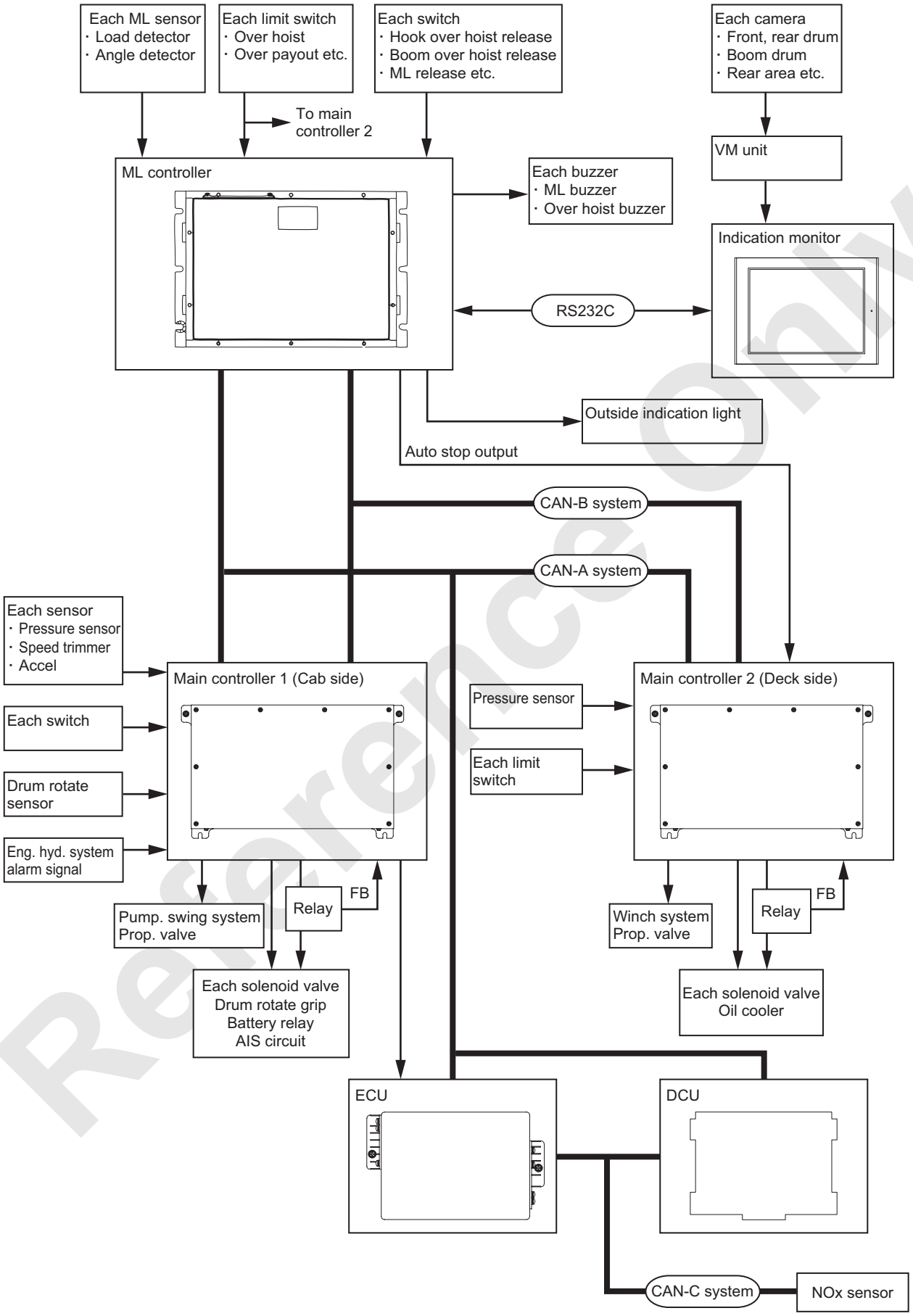

Reference Only

10.2.3 MONITOR DISPLAY

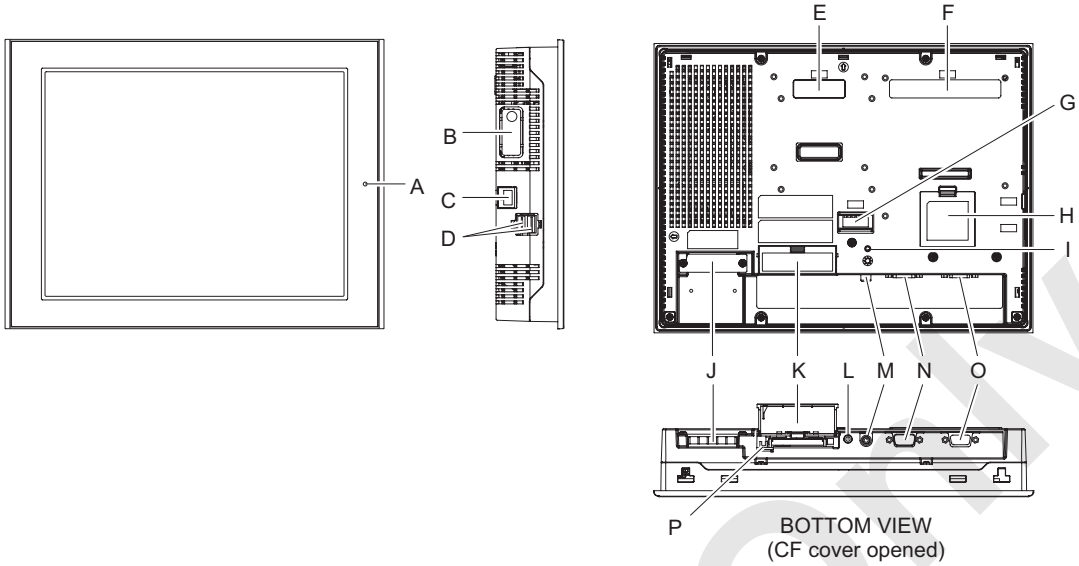

	Name	Explanation
A	STATUS LED	

Color	Indication	Operation mode (pictorial)	Logic motion mode (when logic is effective)
Green	ON	Off line	-
		Running	RUN
	Flashing	Running	STOP
Red	ON	At power ON	
	Flashing	Runnning	Major abnormal
Orange	ON	Backlight bulb is blown or main machinery failure *1	
	Flashing	Software is being started.	

* 1. Backlight replacement needs returning to manufacturer.

B	Extended unit interface (EXT)	For installation of extended unit (Transmission function) * not used
C	Ethernet interface (LAN)	10BASE-T / 100BASE-TX RJ-45 type modular jack connector (8 pole) * not used
D	USB Host interface (USB)	2 port. USB 1.1 correspond Type A Voltage DC5V ± 5%, Output current : 500mA (Max) Max transmission distance 5m * not used
E	Extended unit interface 1	For installation of extended unit (Transmission function) * not used
F	VM unit interface 1	This is to connect VM unit when camera is to be connected.
G	Aux. input/output / Voice output interface (AUX)	Outside reset, alarm output, buzzer output, sound output. * not used
H	Extended memory interface	* not used
I	CF card access	Green light is ON when CF card is inserted and cover is closed or CF card is being accessed. <NOTE> · Do not insert or take out CF card when LED lamp is ON Otherwise data in the CF card may be destroyed.
J	Power supply connector	DC model : Connector (socket) type
K	CF card cover	-
L	Audio input interface (L-IN / MIC)	This is to connect microphone. Minijack connector (φ 3.5 mm) * not used
M	Video input interface (V-IN)	NTSC (59.9Hz) / PAL (50Hz) type correspnd RCA connector (75 Ω) * not used
N	Serial interface (COM1)	D-SUB9 pin plug type,RS232C. This is used for transmission to ML
O	Serial interface (COM2)	D-SUB9 pin socket type. Corespond to RS422 / RS485. * not used
P	Dip Swtich	In the CF card cover. * not used

Reference Only

1. GENERAL SPECIFICATION

(1) Electrical specification

		DC model
Power supply	Rated voltage	DC24V
	Voltage range	DC19.2 to 28.8V
	Allowable instant power outage time	10ms or less
	Power consumption	DC24V 2.08A or less (TYP 1.30A)
	Inrush current	30A or less
Dielectric stregth		AC1000V 20mA 1 minute (between charging terminal and FG terminal)
Insulating resistance		DC500V, more than 10MΩ (between charging terminal and FG terminal)

(2) Environmental specification

Physical environment	Atmospheric temp for use	0 to 50℃ (32 to 122°F) *1
	Atmospheric temp for storing	-20 to +60℃ (-4 to 140°F)
	Atmospheric humidity for use	10 to 90%RH (No condensation. Wet bulb temp 39℃ (102°F) or lower.
	Atmospheric humidity for storing	10 to 90%RH (No condensation. Wet bulb temp 39℃ (102°F) or lower.
	Dust	0.1mg/m^3 or less (No conductive dust)
	Contamination	Contamination degree 2

*1 As for STN color LCD equipped model, long time use under ambient tenperature higher than 40 degrees C may cause indication quality lowering such as contrast.

(3) Installation specification

Condition	Ground	Functional grounding : D type ground (for both SG-FG)
	Construction *1	Protection : IP65f equivalent NEMA #250 TYPE 4X/13 (Front surface at panel built in.) Shape : Built in type Installation method : Panel built in.
	Cooling type	Natural cooling

*1 Protective construction of the front area when this unit is installed in the panel. Adaptability has been checked under these conditions but it does not necessary gurantee use under all environmental conditions. Even the oil specified in the test may cause oil ingress due to sheet peeling off of the front area if this unit is exposed in such oil in sprayed condition for long time or exposed in extreamly low viscosity machine oil.
In such case, some other countermeasure may become necessary. Use of non specified oil may cause same oil ingress or plastic deterioration. Check environmental condition in adavance before use. Drip proof packing used for long time or resued drip proof packing once installed on the panel has dirt or flaw and may not be good for protection. Periodical replacement of drip proof packing is recommended.

Reference Only

2. OUTER INTERFACE

(1) COM1 (USED FOR TRANSMISSION TO ML)

Recommended connector in cable side	XM2D-0901 Omron
Recommended jack screw	XM2Z-0073 Omron
Recommended cover	XM2S-0913 Omron
Caulking fix fitting	#4-40 (UNC)

Pin No.	RS232C	
	Signal	Content
1	CD	Carrier detect
2	RD (RXD)	Received data
3	SD (TXD)	Transmitted data
4	ER (DSR)	Data terminal ready
5	SG	Signal ground
6	DR (DSR)	Data set ready
7	RS (RTS)	Transmission request
8	CS (CTS)	Transmission permit
9	CI (RI) / (VCC)	Indication + 5 V ± 5% output 0.25 A

(2) Installation procedure

⚠ CAUTION

Overtightening the screws may damage the GP. Proper tightening torque for drip proof effect is 0.5 N·m.

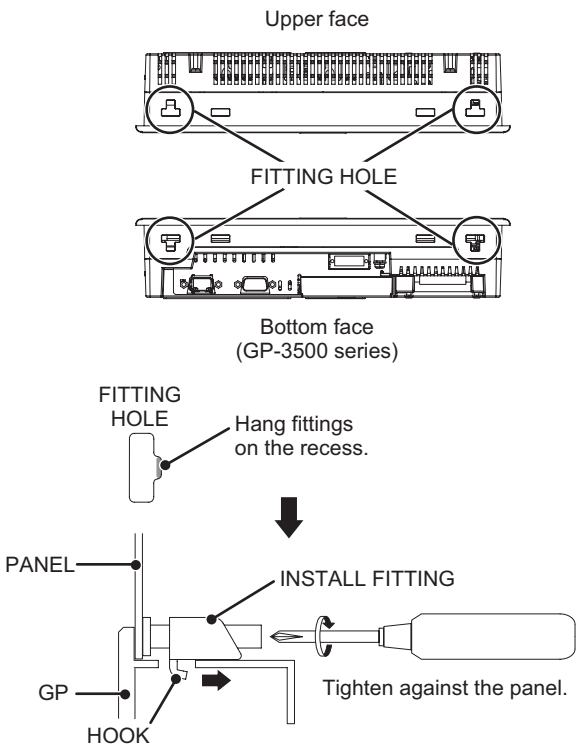

Reference Only

3. POWER SUPPLY WIRING

WARNING

- **Electric shock may be caused. Ensure to connect under the power supply is disconnected.**
  Failure to observe these precautions may result in serious injuries or loss of life.
- **Do not supply other than specified voltage. Otherwise the power source line or base machine may be damaged.**
  Failure to observe these precautions may result in parts damage.
- **Ensure to connect FG terminal to earth. Otherwise electric shock may be caused in case of failure.**
  Failure to observe these precautions may result in serious injuries or loss of life.

(1) Power cable specification
Use copper core wire.

Size of power cable	0.75 to 2.5 mm^2 (18 - 12 AWG)
Core wire	Solid or strand wire *1
Core wire length	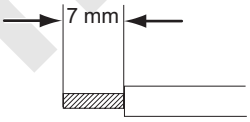

*1 If strand wire is used, ensure that the core wire is properly stranded.
Otherwise shortening may occur by strand touching the adjacent terminal.

Reference Only

(2) Power supply connector (plug) specification

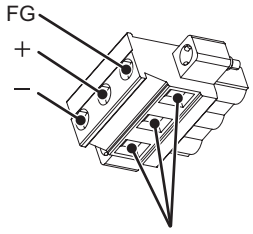 POWER CABLE CONNECTING AREA	⊕	24V
	⊖	0V
	FG	Ground terminal connected to GP body. * Not used

Note

Power supply connector is DIGITAL CA5-DCCNL-01 or PHOENIX-CONTACT GMVSTBW2, 5/3-STF-7, 62.

Use wiring material as shown below.
These are all product of PHOENIX- CONTACT.

Recommended screw driver	SZF 1-0.6 × 3.5 (1204517)
Recommended terminal	AI 0.75-8GY (3200519)
	AI 1-8RD (3200030)
	AI 1.5-8BK (3200043)
	AI 2.5-8BU (3200522)
Recommended crimping tool for terminal	CRIMPFOX ZA 3 (1201882)

Reference Only

(3) Procedure of power cable connection

(A) Ensure that the power is disconnected.
(B) Take out the power supply connector (plug) from the main body.
(C) Loosen the 3 screws in the center of power supply connector.
(D) Peel off the sheath of the power supply cable and twist the strand wire and insert into rod terminal and crimp.
Install it to the connecting points.
(E) Secure them with screws.

CAUTION

- **When tightening the terminal screw, use flat head screw driver (Size 0.6 × 3.5).**
  Tightening torque is 0.5 to 0.6 N·m.
- **Do not solder on cable connection point.**
  Otherwise extreme heat may cause failure or fire.

(F) Install the power supply cable to GP and secure it to GP body with left and right power supply connector securing screws.

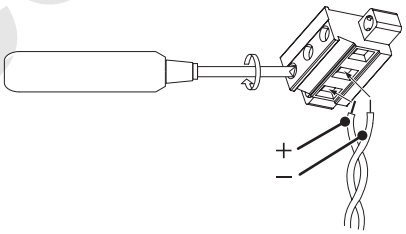

Reference Only

(4) Handling of the bypass switch when touch panel of the monitor dose not functioning

In case of abnormal phenomenon occurs on the monitor as no functioning of touch panel at the boot up, the crane operation becomes possible by the following bypass processing.

(A) Remove a fuse F17 (5A) for not applying the power to the monitor.
(B) Start the engine.
(C) The main controller 2 bypass switch is to be turned ON once and immediately after turned OFF.
(D) Confirm each levers are ready for operation after the function lock lever is shifted to work side.
(E) If not obtain the crane operation after the step 4. above has been carried out, repeat step 3. again and reconfirm of the readiness for operation.

⚠ CAUTION

This process is to be made only at emergency case.
No any indication on the display panel.
Evacuate from the situation carefully.

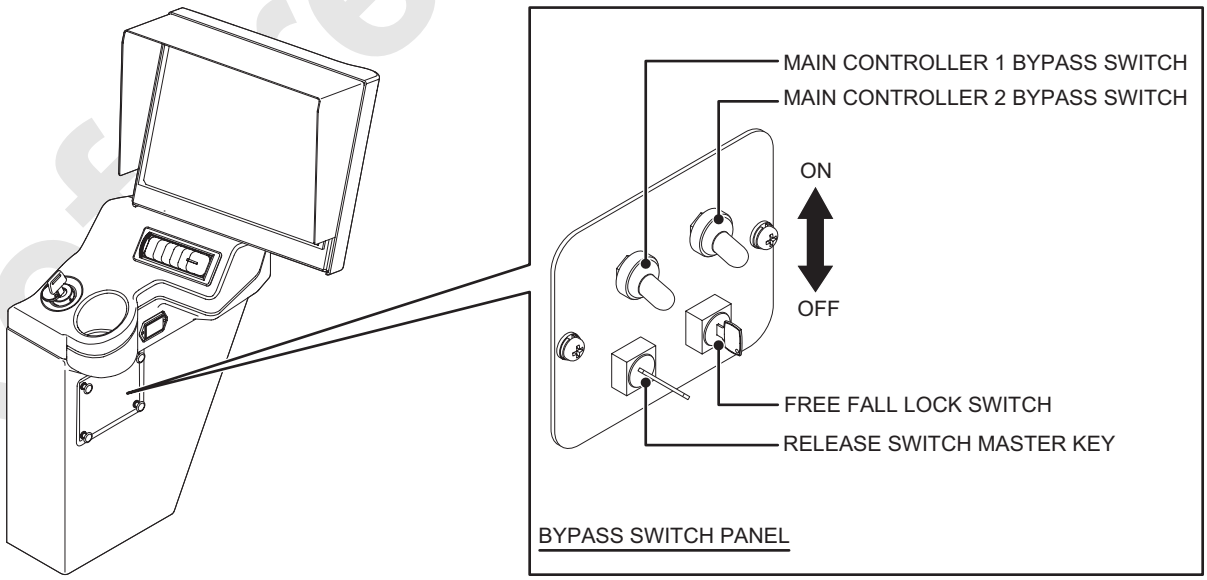

Reference Only

10.2.4 DETAIL OF ML CONTROLLER

1. Outside view and connector layout

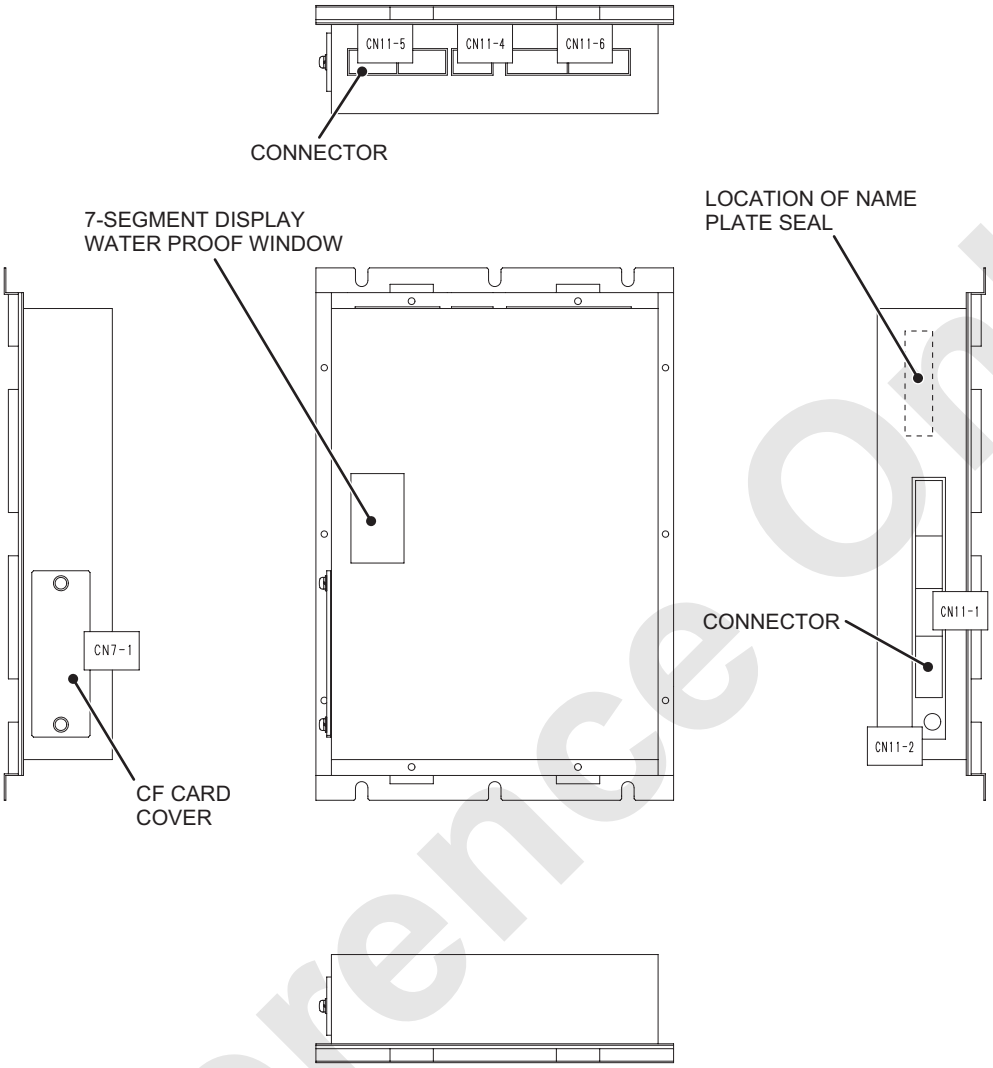

- CF card contains the adjusted data as backup. When replacing the ML controller, ensure to re-insert the original CF card and copy the backup data to the controller.

Reference Only

2. ML controller connector pin layout
   (View from main machinery harness)

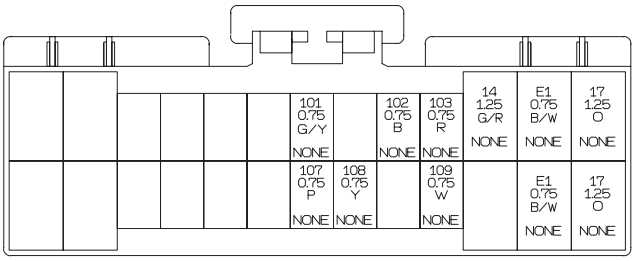

CN-11-1AF

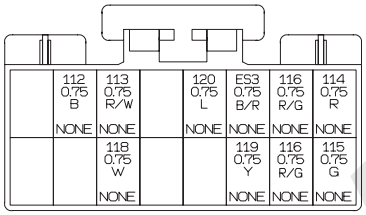

CN-11-1BF

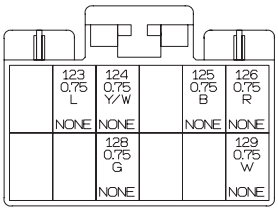

CN-11-1CF

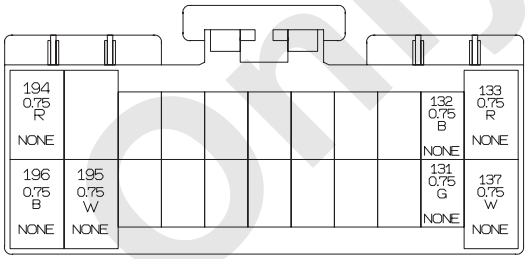

CN-11-1DF

Reference Only

Connector No.	Pin No.	Name	Wire No.	Wire color	Specification
CN-11-1A	1	Control power (+)	17	O	Main power (IG power +)
	6	Control power (+)	17	O	Main power (IG power +)
	2	Control power (-)	E1	B/W	Main power (IG power GND)
	7	Control power (-)	E1	B/W	Main power (IG power GND)
	3	Backuppower(+)	14	G/R	Subpower(+Bpower+)
	8	Backup power (GND)	E	BW	Sub power (+B power GND)
	17	Load detector (for crane) power (+)	103	R	12V load detecting power -1 (+)
	25	Load detector (for crane) signal	109	W	12V load detecting signal -1 (0 to 6.2V)
	18	Load detector (for crane) power (-)	102	B	12V load detector power (GND)
	26				12V load detector signal -2 (0 to 6.2V)
	19				12V load detector power -2 (+)
	27	Load detector (for jib) power (+) (Not used)	108	Y	12V load detector power -3 (+)
	20	Load detector (for jib) signal (Not used)	101	G/Y	12Vloaddetectingsignal-3(0to6.2V)
	28	Load detector (for jib) power (-) (Not used)	107	P	12V load detector power (GND)
	21				12V load detecting signal -4 (0 to 6.2V)
	29				12V load detector power -4 (+)
	22				12V load detector power -5 (+)
	30				12V load detecting signal -5 (0 to 6.2V)
	23				12V load detector power (GND)
	31				12V load detecting signal -6 (0 to 6.2V)
	24				12V load detector power -6 (+)
	32				12V load detector power -7 (+)
	4				12V load detecting signal -7 (0 to 6.2V)
	9				12V load detector power (GND)
	5				12V load detecting signal -7 (0 to 6.2V)
	10				12V load detector power -8 (+)

Reference Only

Connector No.	Pin No.	Name	Wire No.	Wire color	Specification
CN-11-1B	33	Inter main controller transmission 1 (H)	114	R	CAN0 H
	41	Inter main controller transmission 1 (L)	115	G	CAN0 L
	34	Inter main controller transmission 1 (H end)	116	R/G	CAN0 H end
	42	Inter main controller transmission 1 (L end)	116	R/G	CAN0 L end
	35	Shield earth	ES3	B/R	Shield earth signal ground
	43	Inter main controller transmission 2 (H)	119	Y	CAN1 H
	36	Inter main controller transmission 2 (L)	120	L	CAN1 L
	44				CAN1 H end
	37				CAN1 L end
	45				Shield earth signal ground
	38	Boom angle detector power (+)	113	R/W	12V ML system sensor power 1-1 (+)
	46	Boom angle detector signal	118	W	12V ML system sensor signal 1-1 (0 to 12V)
	39	Boom angle detector power (GND)	112	B	12V ML system sensor power 1 (GND)
	47				12V ML system sensor signal 1-2 (0 to 12V)
	40				12V ML system sensor power 1-2 (+)
	48	vacant			vacant
CN-11-1C	49	Crane mast angle detector power (+) (Not used)	126	R	12V ML system sensor power 1-3 (+)
	55	Crane mast angle detector signal (Not used)	129	W	12V ML system sensor power 1-3 (0 to 12V)
	50	Crane mast angle detector power (GND) (Not used)	125	B	12V ML system sensor power 1 (GND)
	56				12V ML system sensor signal 1-4 (0 to 12V)
	51				12V ML system sensor signal 1-4 (+)
	57	vacant			vacant
	52	Jib angle detector power (+)	124	Y/W	12V ML system sensor power 2-1 (+)
	58	Jib angle detector signal (OPT)	128	G	12V ML system sensor signal 2-1 (0 to 12V)
	53	Jib angle detector power (GND)	123	L	12V ML system sensor power 2 (GND)
	59				12V ML system sensor signal 2-2 (0 to 12V)
	54				12V ML system sensor power 2-2 (+)
	60	vacant			vacant

Reference Only

Connector No.	Pin No.	Name	Wire No.	Wire color	Specification
CN-11-1D	11	Swing angle detector power (+)	133	R	12V ML system sensor power 2-3 (+)
	14	Swing angle detector (A) signal	137	W	12V ML system sensor signal 2-3 (0 to 12V)
	61	Swing angle detector power (-)	132	B	12V ML system sensor power 2 (GND)
	69	Swing angle detector (B) signal	131	G	12V ML system sensor signal 2-4 (0 to 12V)
	62				12V ML system sensor power 2-4 (+)
	70				24V load detector power 2-4 (+)
	63				24V load detector signal -1 (0 to 12.5V)
	71				24V load detector power (GND)
	64				24V load detector signal -2 (0 to 12.5V)
	72				24V load detector power -2 (+)
	65				24V load detector power -3 (+)
	73				24V load detector signal -3 (0 to 12.5V)
	66				24V load detector power (GND)
	74				24V load detector signal -4 (0 to 12.5V)
	67				24V load detector signal -4 (0 to 12.5V)
	75	vacant			vacant
	68	vacant			vacant
	76	vacant			vacant
	12				RS232C (+)
	15	Inter monitor transmission (TXD)	195	W	RS232C (TXD)
	13	Inter monitor transmission (RXD)	194	R	RS232C (RXD)
	16	Inter monitor transmission (GND)	196	B	RS232C (GND)

Reference Only

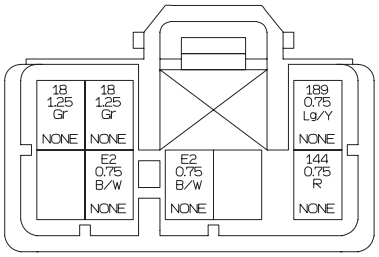

CN-11-4F

Connector No.	Pin No.	Name	Wire No.	Wire color	Specification
CN-11-4	1	Output power (+)	18	Gr	Extended 24V power (+)
	4				Extended 25V power (+)
	2	Output power (+)	18	Gr	Extended 26V power (+)
	5	Output power (-)	E2	B/W	Extended 24V power (GND)
	6	Output power (-)	E2	B/W	Extended 25V power (GND)
	7				Extended 26V power (GND)
	3	Voice alarm output 4	189	Lg/Y	Ground output (0.1A)
	8	Outside indication light (Red)	144	R	Ground output (0.2A)

Reference only

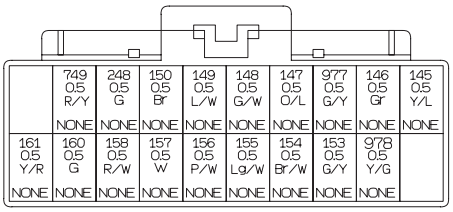

CN-11-5AF

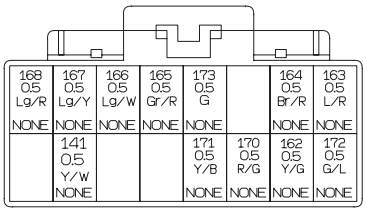

CN-11-5BF

Connector No.	Pin No.	Name	Wire No.	Wire color	Specification
CN-11-5A	1	Hook over hoist LS1	145	Y/L	24V input
	2	Hook over hoist LS2	146	Gr	24V input
	3	Gantry hoist detect LS (Not used)	977	G/Y	24V input
	4	Boom backstop no.2 LS	147	O/L	24V input
	5	Crane boom over hoist LS	148	G/W	24V input
	6	Boom backstop no.1 LS	149	L/W	24V input
	7	Jib over hoist LS	150	Br	24V input
	8	Civil engineering mode SW	248	G	24V input
	9	Work light SW	749	R/Y	24V input
	10				24V input
	11				24V input
	12	Mast cylinder position detect LS (Not used)	978	Y/G	24V input
	13	TW jib bending prevent LS (Not used)	153	G/Y	24V input
	14	Latch (engage) LS (Not used)	154	Br/W	24V input
	15	Latch (disengage) LS (Not used)	155	Lg/W	24V input
	16	Over payout prevent LS (front)	156	P/W	24V input
	17	Over payout prevent LS (rear)	157	W	24V input
	18	Over payout prevent LS (third)	158	R/W	24V input
	19	Main controller 1 bypass SW	160	G	24V input
	20	Main controller 2 bypass SW	161	Y/R	24V input

Reference Only

Connector No.	Pin No.	Name	Wire No.	Wire color	Specification
CN-11-5B	21	Drum select SW (rear)	163	L/R	24V input
	22	Drum select SW (front)	164	Br/R	24V input
	23				24V input
	24	Download start signal	173	G	24V input
	25	Master key SW	165	Gr/R	24V input
	26	Hook over hoist release SW	166	Lg/W	24V input
	27	Boom/Jib over hoist release SW	167	Lg/Y	24V input
	28	Moment limiter release SW	168	Lg/R	24V input
	29	CEN spec. distinct signal	172	G/L	Ground input (330Ω)
	30	Simultaneous control permit signal	162	Y/G	Ground input (330Ω)
	31	Adjustment permit signal	170	R/G	Ground input (4.7kΩ)
	32	Program rewrite permit signal	171	Y/B	Ground input (4.7kΩ)
	33	vacant			vacant
	34	vacant			vacant
	35	Wind speed sensor	141	Y/W	Pulse input (+)
	36				Pulse input (-)

Reference Only

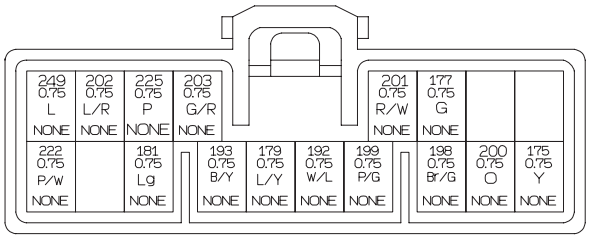

CN-11-6AF

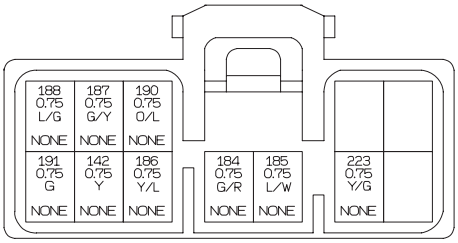

CN-11-6BF

Connector No.	Pin No.	Name	Wire No.	Wire color	Specification
CN-11-6A	13				24V Output
	30	Front drum hoist stop	175	Y	24V Output
	12				24V Output
	29	Front drum lower stop	200	O	24V Output
	11	Rear drum hoist stop	177	G	24V Output
	28	Mode select (luffing jib)	198	Br/G	24V Output
	10	Rear drum lower stop	201	R/W	24V Output
	27	Mode select (mast)	199	P/G	24V Output
	26	Mode select (assy/disassy)	192	W/L	24V Output
	25	Third drum hoist stop	179	L/Y	24V Output
	24	Mode select (self removal)	193	B/Y	24V Output
	9	Third drum lower stop	203	G/R	24V Output
	8	Over load alarm buzzer	225	P	24V Output
	23	Boom drum raise stop	181	Lg	24V Output
	7	Boom drum lower stop	202	L/R	24V Output
	22				24V Output
	6	Civil engieering mode lamp	249	L	24V Output
	21	Mast bending prevent signal	222	P/W	24V Output
CN-11-6B	5				24V Output
	20				24V Output
	4				24V Output
	19	Operator authenticate signal	223	Y/G	24V Output
	18	Overload buzzer	185	L/W	24V Output
	17	Over hoist buzzer	184	G/R	24V Output
	3	Voice alarm output 5	190	O/L	Ground output (0.1A)
	16	Voice alarm output 1	186	Y/L	Ground output (0.1A)
	2	Voice alarm output 2	187	G/Y	Ground output (0.1A)
	15	Outside indication light (yellow)	142	Y	Ground output (0.1A)
	1	Voice alarm output 3	188	L/G	Ground output (0.1A)
	14	Outside indication light (green)	191	G	Ground output (0.1A)

Reference Only

3. System block diagram

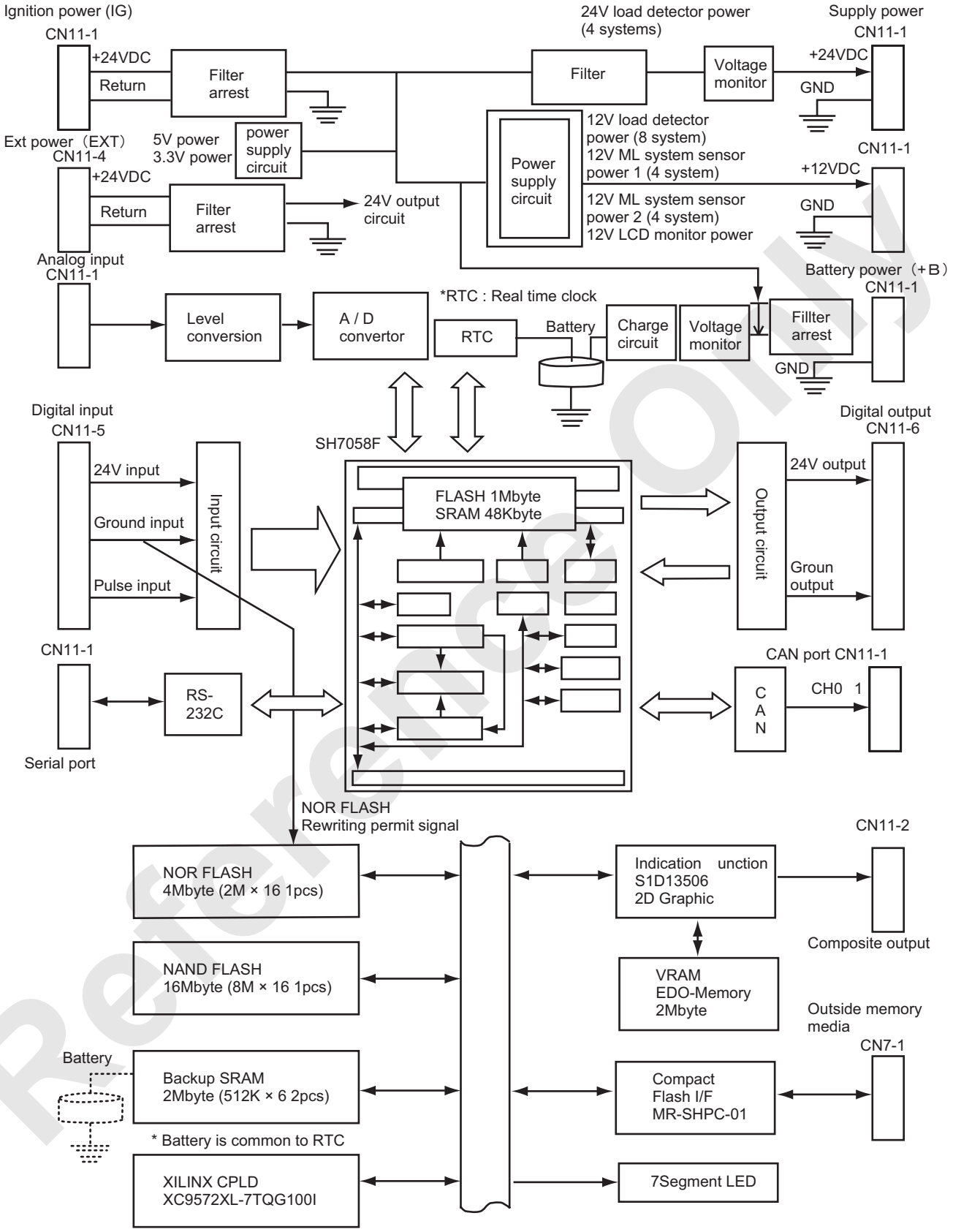

Reference Only

4. ML input/output

Note

The table of code shown all of code numbers and some of codes would not be indicated depending on the model.

(1) Analogue input [A]

No.	Name	Variation	Input Voltage	Remarks	Judgement
ML-A01	Crane boom load detector	0 t to rated t	1 to 5V	CN11-1-25	Judge detect either following. • Input voltage < 0.29V. • Input voltage > 6.19V.
ML-A02	Spare	↑	↑	CN11-1-26	
ML-A03	Jib load detector	↑	↑	CN11-1-20	
ML-A04	Spare	↑	↑	CN11-1-21	
ML-A05	Spare	↑	↑	CN11-1-30	
ML-A06	Spare	↑	↑	CN11-1-31	
ML-A07	Spare	↑	↑	CN11-1-4	
ML-A08	Spare	↑	↑	CN11-1-5	
ML-A09	Boom base angle detector	-150 to 150 degrees	0.4 to 11.6V	CN11-1-46	Judge detect either following. • Input voltage < 0.30V. • Input voltage > 12V.
ML-A10	Spare	↑	↑	CN11-1-47	
ML-A11	Crane mast angle detector	↑	↑	CN11-1-55	
ML-A12	Spare	↑	↑	CN11-1-56	
ML-A13	Jib base angle detector	↑	↑	CN11-1-58	
ML-A14	Spare	↑	↑	CN11-1-59	
ML-A15	Swing angle detector A	0 to 180 degrees	0 to 12V	CN11-1-14	Judge when the voltage differential other than 5.0V to 7.0V between the angle detector A and B.
ML-A16	Swing angle detector B	↑	0 to 12V	CN11-1-69	
ML-A17	Spare		0 to 12.5V	CN11-63	
ML-A18	Spare		0 to 12.5V	CN11-64	
ML-A19	Spare		0 to 12.5V	CN11-73	
ML-A20	Spare		0 to 12.5V	CN11-74	

(2) Pulse input (break in) [E]

No.	Name	Condition	Signal level	Remarks	Judgement
ML-E01	Anemometer		GND/OPEN	CN11-5-35	Judge when read the pulse fail.

Reference Only

(3) Digital intput [B]

No.	Name	Condition	Signal level	Remarks	Judgement
ML-B01	Hook over hoist LS1	Normal / Over	+24V/OPEN	CN11-5-1	No failure judgement take place.
ML-B02	Hook over hoist LS2	Normal / Over	+24V/OPEN	CN11-5-2	
ML-B03	Gantry raise detect LS	Not detect / Detect	+24V/OPEN	CN11-5-3	
ML-B04	Boom B/S No.2 LS	Normal / Over	+24V/OPEN	CN11-5-4	
ML-B05	Crane boom over hoist LS	Normal / Over	+24V/OPEN	CN11-5-5	
ML-B06	Boom B/S No.1 LS	Normal / Over	+24V/OPEN	CN11-5-6	No failure judgement take place.
ML-B07	Jib over hoist LS	Normal / Over	+24V/OPEN	CN11-5-7	
ML-B08		Civil engineering mode / Normal	+24V/OPEN	CN11-5-8	
ML-B09	Work light SW	ON / OFF	+24V/OPEN	CN11-5-9	
ML-B10	Spare		+24V/OPEN	CN11-5-10	
ML-B11	Spare		+24V/OPEN	CN11-5-11	
ML-B12	Mast cylinder LS	Not detect / Detect	+24V/OPEN	CN11-5-12	
ML-B13	TW jib bending prevent LS	Ground / Normal	+24V/OPEN	CN11-5-13	
ML-B14	Latch (engage) LS	Engage / Normal	+24V/OPEN	CN11-5-14	
ML-B15	Latch (disengage) LS	Disengage / Normal	+24V/OPEN	CN11-5-15	
ML-B16	Over payout prevent (Front drum)	Normal / Over	+24V/OPEN	CN11-5-16	
ML-B17	Over payout prevent (Rear drum)	Normal / Over	+24V/OPEN	CN11-5-17	
ML-B18	Over payout prevent (3rd drum)	Normal / Over	+24V/OPEN	CN11-5-18	
ML-B19	MC1 bypass SW	Bypass / Normal	+24V/OPEN	CN11-5-19	
ML-B20	MC2 bypass SW	Bypass / Normal	+24V/OPEN	CN11-5-20	
ML-B21	Drum select (Rear hoist) CEN	Select / Not select	+24V/OPEN	CN11-5-21	
ML-B22	Drum select (Front hoist) CEN	Select / Not select	+24V/OPEN	CN11-5-22	
ML-B23	Spare		+24V/OPEN	CN11-5-23	
ML-B24	DL start SW	Start / Normal	+24V/OPEN	CN11-5-24	
ML-B25	Master key	Release / Normal	+24V/OPEN	CN11-5-25	
ML-B26	Hook over hoist release	Release / Normal	+24V/OPEN	CN11-5-26	
ML-B27	Boom over hoist release	Release / Normal	+24V/OPEN	CN11-5-27	
ML-B28	ML release	Release / Normal	+24V/OPEN	CN11-5-28	
ML-B29	CEN spec. recognize signal	CEN / Normal	GND/OPEN	CN11-5-29	
ML-B30	Simultaneous operate permit	Permit & CEN / Normal	GND/OPEN	CN11-5-30	
ML-B31	For adjusting	Adjusting / Normal	GND/OPEN	CN11-5-31	
ML-B32	For program rewriting	Rewrinting / Normal	GND/OPEN	CN11-5-32	

(4) Analogue output [H]

No.	Name	Condition	Signal level	Remarks	Judgement
ML-H01	Spare				
ML-H02	Spare				

Reference only

(5) Digital output [C]

No.	Name	Condition	Signal level	Remarks	Judgement
ML-C01	Front drum hoist stop	Actuate / Normal	+24V/OPEN	CN11-6-30	Judge when mismatch feedback value against output demand.
ML-C02	Front drum lower stop	Actuate / Normal	+24V/OPEN	CN11-6-29	
ML-C03	Rear drum hoist stop	Actuate / Normal	+24V/OPEN	CN11-6-11	
ML-C04	Rear drum lower stop	Actuate / Normal	+24V/OPEN	CN11-6-10	
ML-C05	Third (jib) drum hoist stop	Actuate / Normal	+24V/OPEN	CN11-6-25	
ML-C06	Third (jib) drum lower stop	Actuate / Normal	+24V/OPEN	CN11-6-9	
ML-C07	Boom drum raise stop	Actuate / Normal	+24V/OPEN	CN11-6-23	
ML-C08	Boom drum lower stop	Actuate / Normal	+24V/OPEN	CN11-6-7	
ML-C09	Civil engineering mode	ON / OFF	+24V/OPEN	CN11-6-6	
ML-C10	Wind velocity warning lamp	Warning / Normal	+24V/OPEN	CN11-6-20	
ML-C11	Spare	Actuate / Normal	+24V/OPEN	CN11-6-13	
ML-C12	Spare	Actuate / Normal	+24V/OPEN	CN11-6-12	
ML-C13	Mode select (jib model)	Jib model / Except jib model	+24V/OPEN	CN11-6-28	
ML-C14	Mode select (mast model)	Mast mode / Except mast model	+24V/OPEN	CN11-6-27	
ML-C15	Mode select (assy/disassy)	Assy disassy / Except assy disassy	+24V/OPEN	CN11-6-26	
ML-C16	Mode select (self removal)	Self removal / Except self removal	+24V/OPEN	CN11-6-24	
ML-C17	Outer indication light buzzer (red)	Actuate / Normal	+24V/OPEN	CN11-6-8	
ML-C18	Spare		+24V/OPEN	CN11-6-22	
ML-C19	Mast bending prevent	Actuate / Normal	+24V/OPEN	CN11-6-21	
ML-C20	Spare		+24V/OPEN	CN11-6-5	
ML-C21	Operator authenticate signal	Actuate / Normal	+24V/OPEN	CN11-6-19	
ML-C22	Spare		+24V/OPEN	CN11-6-4	
ML-C23	Over hoist buzzer	Actuate / Normal	+24V/OPEN	CN11-6-17	
ML-C24	Over load buzzer	Actuate / Normal	+24V/OPEN	CN11-6-18	
ML-C25	Voice alarm 1	Actuate / Normal	GND/OPEN	CN11-6-16	
ML-C26	Voice alarm 2	Actuate / Normal	GND/OPEN	CN11-6-2	
ML-C27	Voice alarm 3	Actuate / Normal	GND/OPEN	CN11-6-1	
ML-C28	Voice alarm 4	Actuate / Normal	GND/OPEN	CN11-4-3	
ML-C29	Voice alarm 5	Actuate / Normal	GND/OPEN	CN11-6-3	
ML-C30	Outer indication light (green)	ON / OFF	GND/OPEN	CN11-6-14	Judge when mismatch feedback value against output demand.
ML-C31	Outer indication light (yellow)	ON / OFF	GND/OPEN	CN11-6-15	
ML-C32	Outer indication light (red)	ON / OFF	GND/OPEN	CN11-4-8	

Reference Only

10.2.5 SHIFTING TO MAINTENANCE SCREEN

1. Press the MENU icon in the main screen.

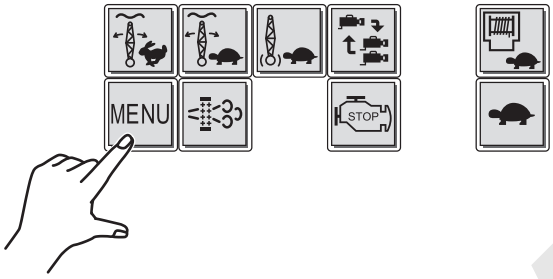

2. Press switch.

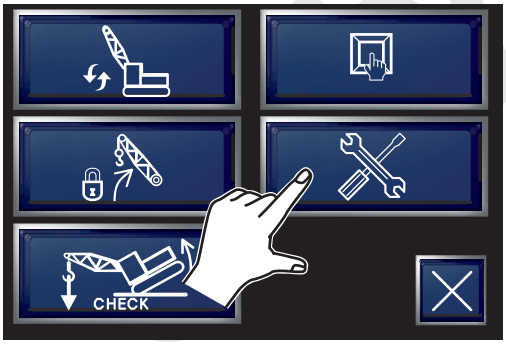

3. Input the password (8 digits) with the keyboard.

* In case of using capital letter, press CAPS switch.

CLR	All clear
DEL	One letter clear
BS	One letter clear and back

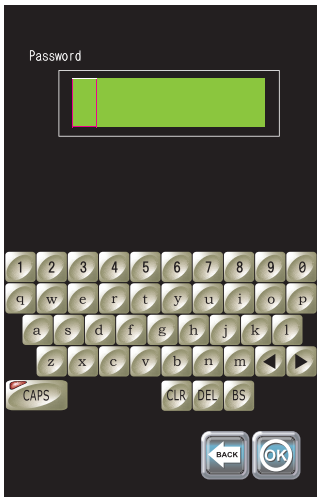

4. Press OK switch.

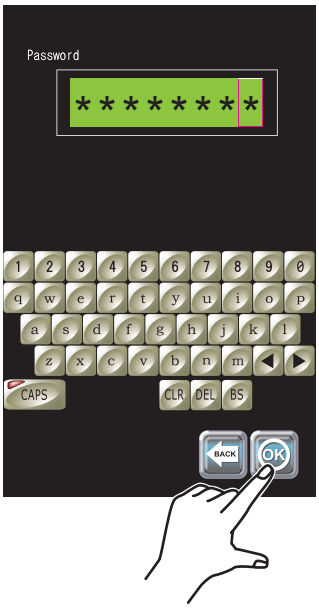

Reference

5. If password is correct, the maintenance menu becomes displayed.

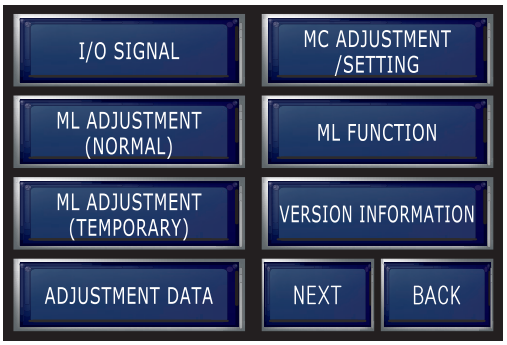

6. If password is not correct, password area blinks three times and then screen returns to 3. screen.
   Check the password and input again.

Reference Copy

10.2.6 INPUT / OUTPUT SIGNAL

This screen can check input signal condition of various sensors or switches or output signal condition of solenoid valves, relays and proportional valves.

1. Press [I/O SIGNAL] in the maintenance menu.

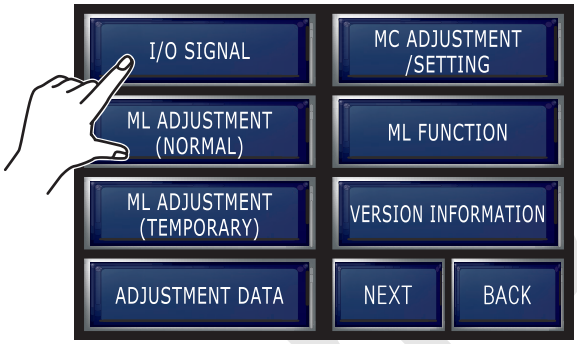

- How to select the in/out signal display
  Select the controller to confirm signals and select signal so the each input/output signal screen is to be displayed.

CONTROLLER SELECT DISPLAY

ML

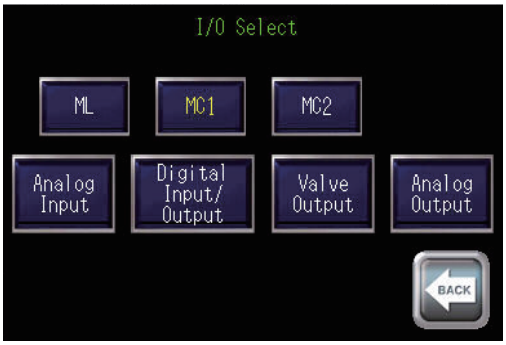

MC1

MC2

Reference Only

2. Input / output check of ML (MOMENT LIMITER)

(1) Select analog input from ML menu.
Display state of analog signals of load detector and angle detector etc.

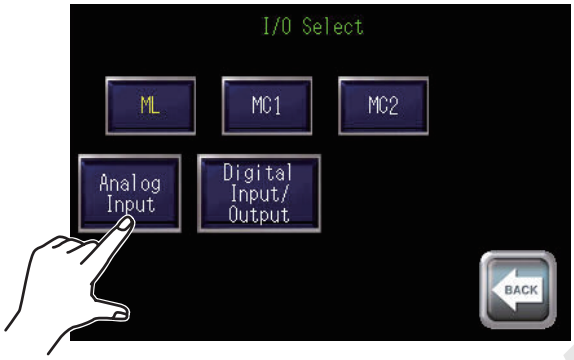

(2) Unit of indicating figure is V (volt).
Refer to the article "10.2.4 DETAIL OF ML CONTROLLER" for connection and signal level.
0V is displayed on non connected point.

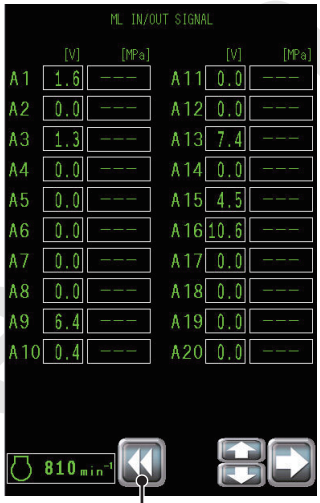

To controler serect display

(3) To display of the respective sensors, press area of input value, the name of sensor will be displayed.
By push BACK icon, previous display indicated.

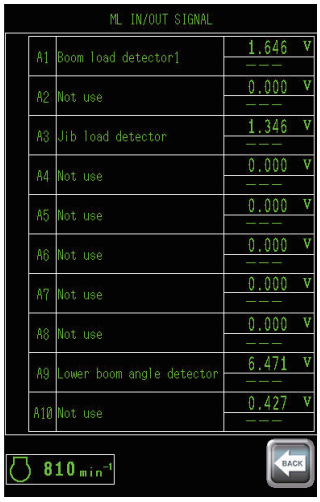

Reference only

(4) By pressing ⇨, digital input and digital output become displayed.

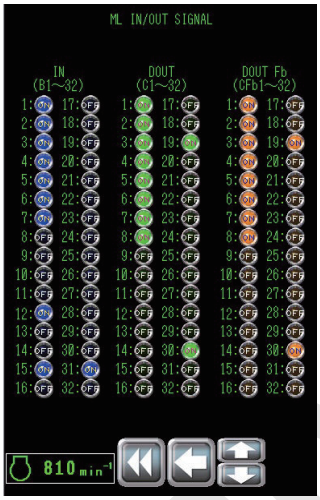

- Digital input
  This is displayed by “IN”.
  Digital input consists of 24 V input and ground (GND) input.
  In 24 V input, ON is displayed at 24 V and OFF at open (0 V).
  In ground input, ON is displayed at ground (GND) and OFF at open.
  As for signal name and specification, refer to the article “10.2.4 DETAIL OF ML CONTROLLER”.

- Digital output
  This is displayed by “DOUT”.
  Digital output consists of 24 V output and ground input.
  In 24 V output, ON is displayed at 24 V and OFF at open (0 V).
  In ground output, ON is displayed at ground (GND) and OFF at open.
  As for signal name and specification, refer to the article “10.2.4 DETAIL OF ML CONTROLLER”.

- Digital output (feedback signal)
  This is displayed by “DOUT Fb”.
  This is feedback signal of digital signal (DOUT) which is corresponds to digital output when normal condition.
  If it does not correspond to digital signal condition, wire breakage or ground fault is presumed.

- To display each value of the I/O, press area of I/O, the name of I/O will be displayed .
  By push BACK , previous display indicated.

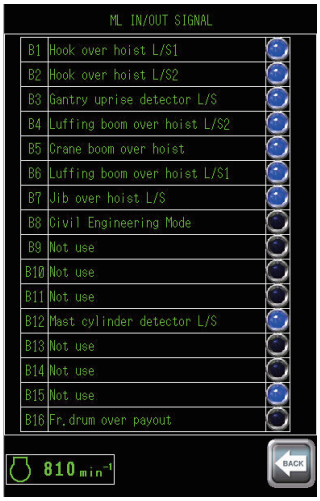

Reference Only

3. Input, output signal check of MC1 (main controller 1)

(1) Select analog input from MC1 menu.
Display state of analog signals of pressure sensors, potentiometers etc.

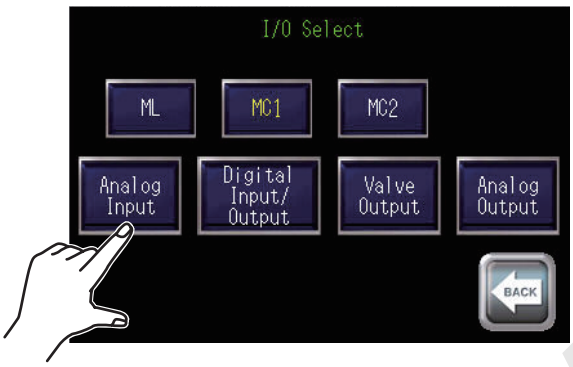

(2) The first screen indicates conditions of analog signal of pressure sensors, potentiometers etc.
Unit of indicating figure is V (volt).
As for signal name and specification, refer to the article “10.3.5 SPECIFICATIONS OF MAIN CONTROLLER INPUT/OUTPUT”.
0V is displayed on non connected point.

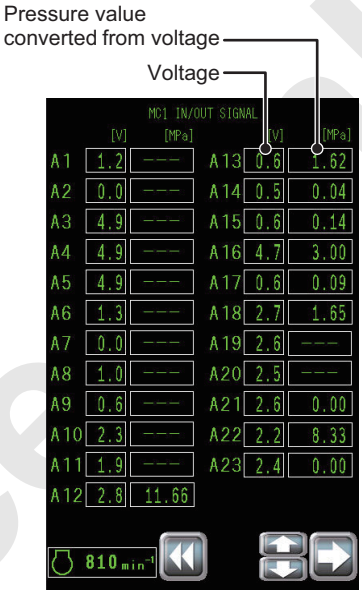

(3) To display of the respective sensors, press area of input value, the name of sensor will be displayed.
By push BACK icon, previous display indicated.

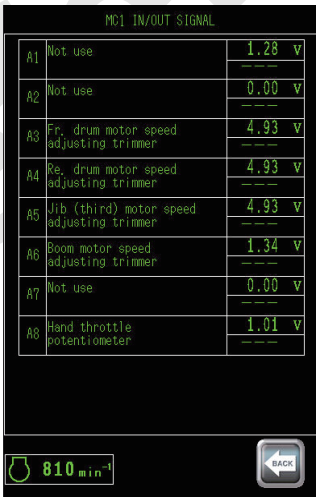

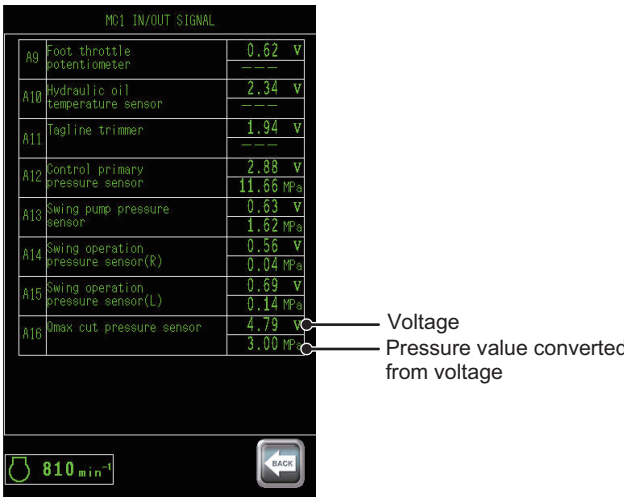

Reference only

(4) By pressing ⇨, digital input and digital output become displayed.

- Digital input
  This is displayed by “IN”.
  Digital input consists of 24 V input and ground (GND) input.
  In 24 V input, ON is displayed at 24 V and OFF at open (0 V).
  In ground input, ON is displayed at ground (GND) and OFF at open.
  As for signal name and specification, refer to the article “10.3.5 SPECIFICATIONS OF MAIN CONTROLLER INPUT/OUTPUT”.

- Digital output
  This is displayed by “DOUT”.
  Digital output consists of 24 V output and ground input.
  In 24 V output, ON is displayed at 24 V and OFF at open (0 V).
  In ground output, ON is displayed at ground (GND) and OFF at open.
  As for signal name and specification, refer to the article “10.3.5 SPECIFICATIONS OF MAIN CONTROLLER INPUT/OUTPUT”.

- Digital output (feedback signal)
  This is displayed by “DOUT Fb”.
  This is feedback signal of digital signal (DOUT) which is corresponds to digital output when normal condition.
  If it does not correspond to digital signal condition, wire breakage or ground fault is presumed.

- To display each value of the I/O, press area of I/O, the name of I/O will be displayed .
  By push BACK , previous display indicated.

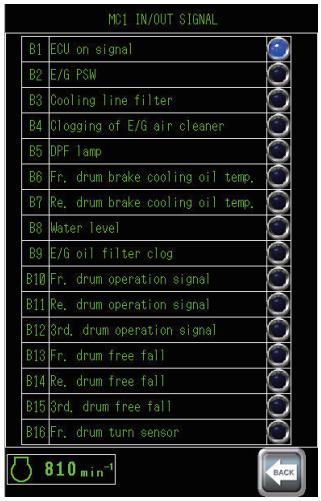

Reference Only

(5) By pressing ⇨, output of proportional valve becomes displayed.

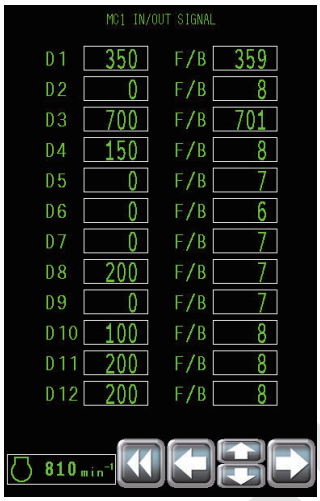

- Indicated value is displayed on left hand and feedback value on right hand.
  Unit of indicating figure is mA (milliampere).
  If indicated value is more than 100 mA and feedback value is about 0 mA, wire breakage is presumed.
  As for signal name and specification, refer to the article “10.3.5 SPECIFICATIONS OF MAIN CONTROLLER INPUT/OUTPUT”.

- To display of the respective proportional solenoid valves, press the area of I/O value, the name of proportional solenoid valve will be displayed.
  By push BACK , previous display indicated.

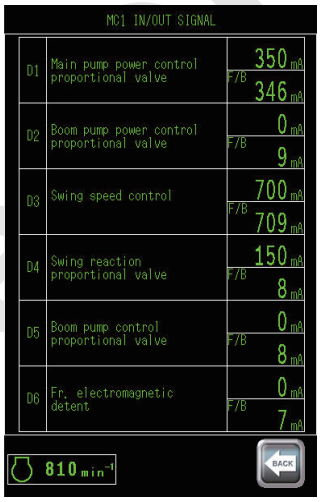

- By pressing NEXT, analog output and engine status becomes displayed.
  Unit of indicating figure is V (volt).
  This is used as accelerator signal to ECU.
  However this becomes effective only when G-28 accelerator control (MC option set) is “ENABLE”.

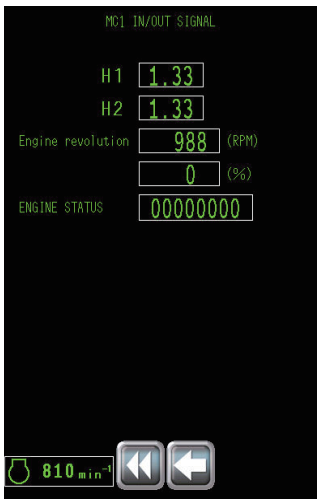

Reference only

4. Input, output signal check of MC2 (main controller 2)

(1) Select analog input from MC2 menu.
Display state of analog signals of pressure sensors, potentiometers etc.

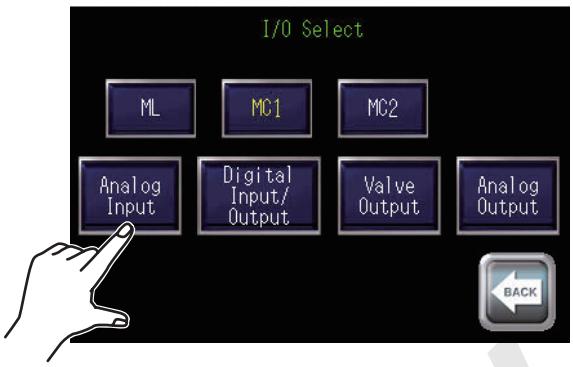

(2) The first screen indicates conditions of analog signal of pressure sensors, potentiometers etc.
Unit of indicating figure is V (volt).
As for signal name and specification, refer to the article "10.3.5 SPECIFICATIONS OF MAIN CONTROLLER INPUT/OUTPUT".
0V is displayed on non connected point.

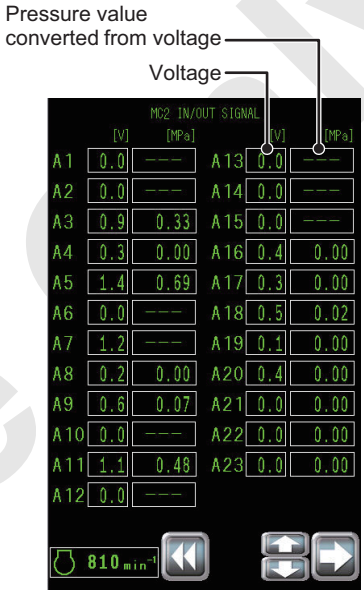

(3) To display of the respective sensors, press area of input value, the name of sensor will be displayed.
By push BACK icon, previous display indicated.

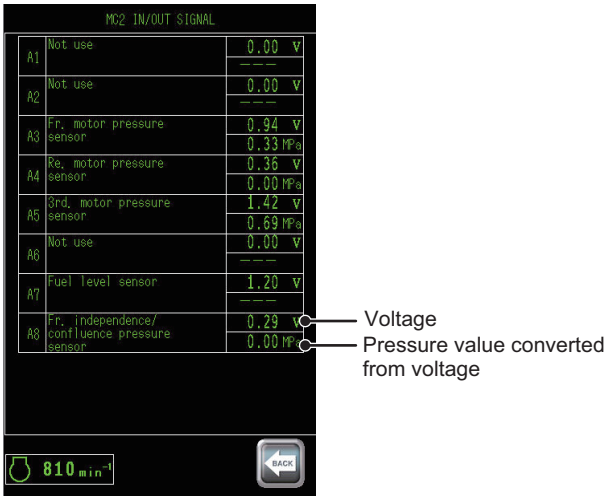

Reference only

(4) By pressing ⇨, digital input and digital output become displayed.

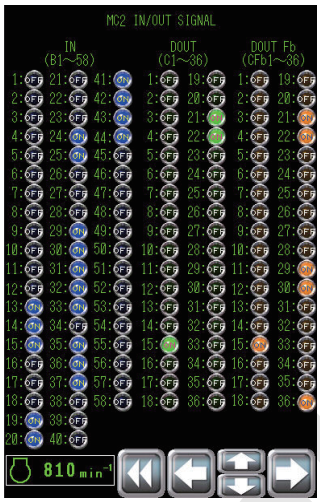

- Digital input
  This is displayed by “IN”.
  Digital input consists of 24 V input and ground (GND) input.
  In 24 V input, ON is displayed at 24 V and OFF at open (0 V).
  In ground input, ON is displayed at ground (GND) and OFF at open.
  As for signal name and specification, refer to the article “10.3.5 SPECIFICATIONS OF MAIN CONTROLLER INPUT/OUTPUT”.

- Digital output
  This is displayed by “DOUT”.
  Digital output consists of 24 V output and ground input.
  In 24 V output, ON is displayed at 24 V and OFF at open (0 V).
  In ground output, ON is displayed at ground (GND) and OFF at open.
  As for signal name and specification, refer to the article “10.3.5 SPECIFICATIONS OF MAIN CONTROLLER INPUT/OUTPUT”.

- Digital output (feedback signal)
  This is displayed by “DOUT Fb”.
  This is feedback signal of digital signal (DOUT) which is corresponds to digital output when normal condition.
  If it does not correspond to digital signal condition, wire breakage or ground fault is presumed.

- To display each value of the I/O, press area of I/O, the name of I/O will be displayed .
  By push BACK , previous display indicated.

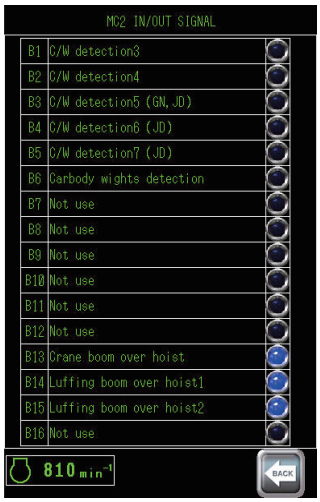

Reference Only

(5) By pressing ⇨, output of proportional valve becomes displayed.

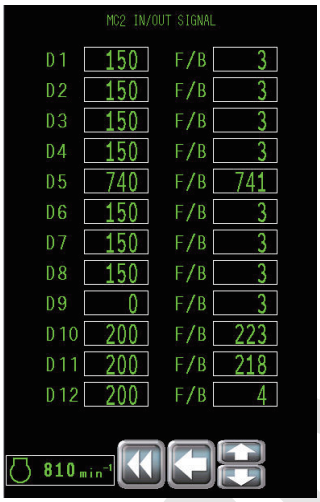

- Indicated value is displayed on left hand and feedback value on right hand.
  Unit of indicating figure is mA (milliampere).
  If indicated value is more than 100 mA and feedback value is about 0 mA, wire breakage is presumed.
  As for signal name and specification, refer to the article “10.3.5 SPECIFICATIONS OF MAIN CONTROLLER INPUT/OUTPUT”.

- To display of the respective proportional solenoid valves, press the area of I/O value, the name of proportional solenoid valve will be displayed.
  By push BACK , previous display indicated.

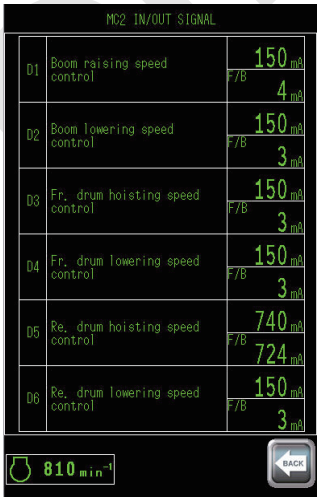

Reference Only

10.2.7 ML FUNCTION SETTING

1. Press “ML FUNCTION” in the maintenance menu.

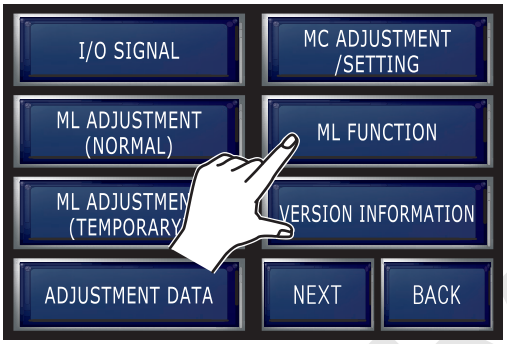

2. Setting item becomes displayed.

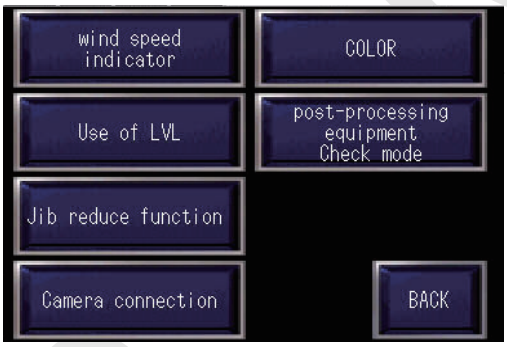

(1) Option setting of anemometer
This is to set with or without wind speed meter.

Ex) In case of anemometer installed.

(A) Press “ANEMOMETER” in the menu.
(B) Option setting screen of anemometer becomes displayed.
(C) Press “Enable”.
* The selected side turns to blue display.
(D) Press ⓞⓚ icon.

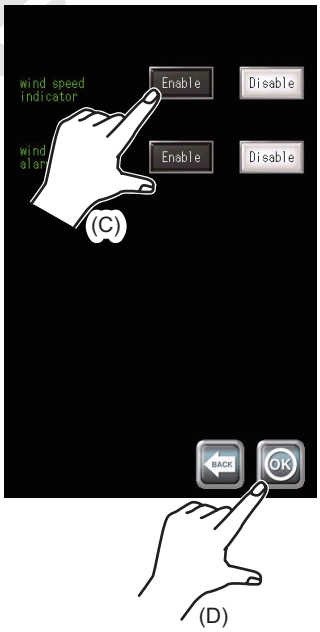

Reference only

(2) Setting of LVL function effective
This is to set LVL (auto stop load ratio) effective or not effective.
Refer to the article “10.2.10 ML ADJUSTMENT (NORMAL)”.
LVL setting for setting procedure of LVL value.

Ex) In case of making LVL function effective.

(A) Press “USE OF LVL” in the menu.
(B) LVL function screen becomes displayed.
(C) Press “Enable”.
* The selected side turns to blue display.
(D) Press [OK] icon.

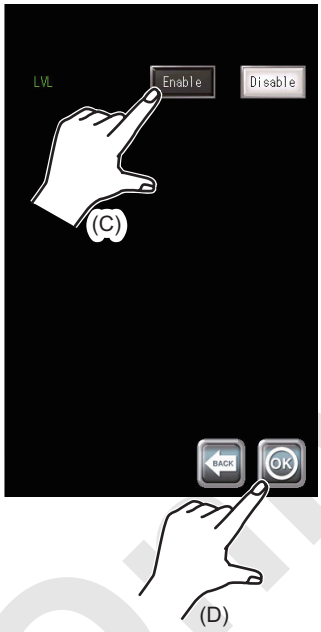

(3) Setting of camera connection
This is to set with or without camera.

Ex) In case camera is added to channel 0.

(A) Press “CAMERA CONNECTION” in the menu.
(B) Camera connection setting screen becomes displayed.
(C) Press “Enable” of channel 0.
* The selected side turns to blue display.
(D) Press [SET] icon.

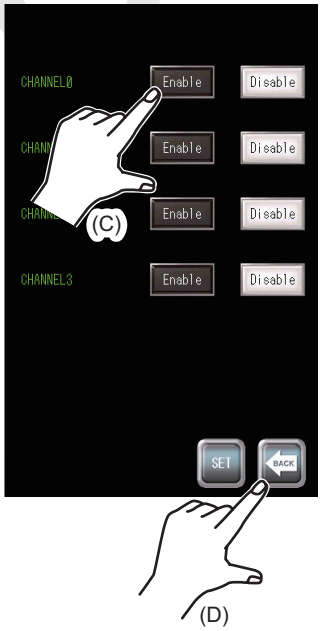

(4) Color adjustment
Crane body color in the main screen is to be adjusted.

(A) Press “COLOR” in the menu.
(B) Color adjusting screen is displayed.
(C) Press “Yes”.
(D) Select color.
(E) Press [OK] icon.

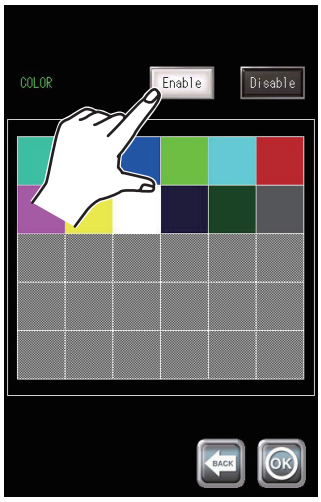

Reference Only

10.2.8 DATA COPY, FORMAT

1. Press “DATA COPY, FORMAT” in the maintenance menu.

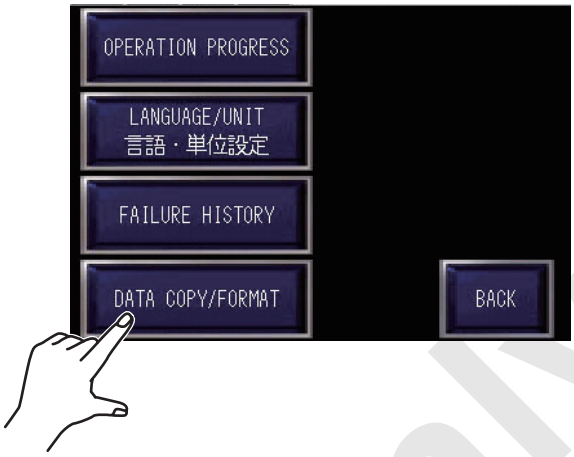

2. Items become displayed.

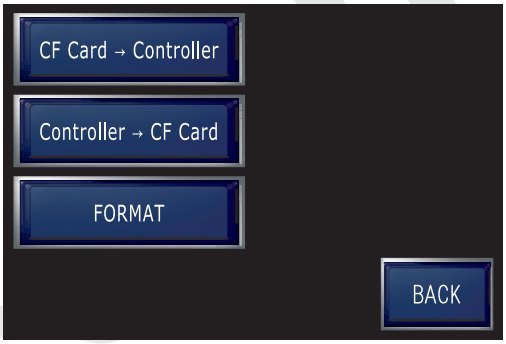

(1) Adjustment data reading out
This reads out backup data in the data card into memory in the controller.
Memorized data in the controller are overwritten and are erased.
Actual data to be used for calculation is those in the controller.
Special caution is required for this handling.

(2) Adjustment data writing in
This is to copy the memorized data in the controller to the data card.
(Adjustment data back up)

(3) Adjustment data formatting
This is to format the adjustment data memorized in the controller.
The backup data in the data card is not formatted.

Reference only

(A) Adjustment data reading out
This is to read out the adjusted value (backup data) in the data card to the memory in the controller.

Note

When using this function, the data in the controller being used for calculation is overwritten.
Be careful not to use this function in error.

Select “CF Card → Controller” in the menu.
The screen shown right becomes displayed.
Press SET for 3 seconds to execute.

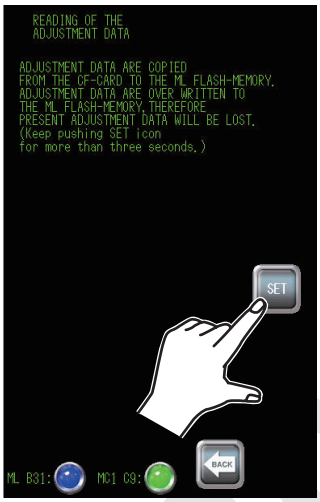

When completed properly, the screen shown right is displayed.
By pressing OK, the screen returns to the previous one.

After execution, if error message as shown right is displayed, data card failure (including not enough insertion) is presumed.
Re-insert the card and try again.
By pressing BACK, screen returns to the previous one.
Unless both of ML B31 and MC1 C9 lamps displayed on lower part of the screen light up, can not be accessed to the card and reading out would not be completed properly.
In this case, check the function of ML adjusting mode select relay (R-36).

Reference Only

(B) Adjustment data writing in

This is to copy the adjustment data in the memory of the controller to the data card.

* Normally whenever adjustment is done, data is copied to the card, but this is used to copy forcibly.

Select “Controller→ CF Card” in the menu.
The screen shown right becomes displayed.
Press SET for 3 seconds to execute.

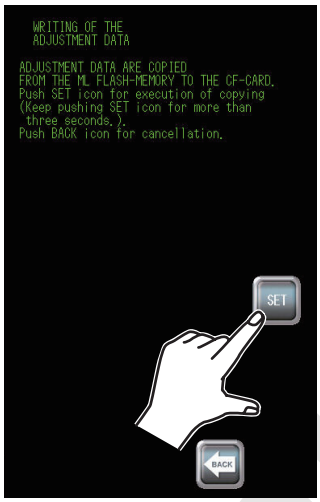

When completed properly, the screen shown right is displayed.
By pressing OK, the screen returns to the previous one.

After execution, if error message as shown right is displayed, data card failure (including not enough insertion) is presumed.
Re-insert the card and try again.
By pressing BACK, screen returns to the previous one.

Reference only

(C) Adjustment data formatting
This is to format the adjustment data in the memory in the controller.

Note

When using this function, the data in the controller being used for calculation is overwritten.
Be careful not to use this function in error.

Select “FORMAT” in the menu.
The screen shown right is displayed.
Press SET for 3 seconds to execute.

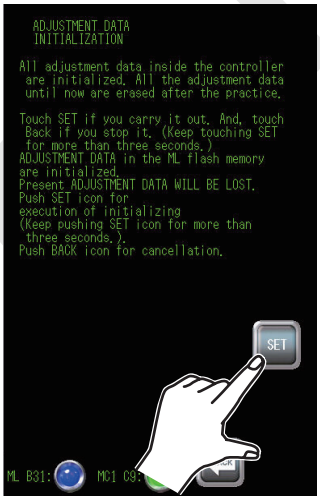

When completed properly, the screen shown right is displayed.
By pressing OK the screen returns to the previous one.
Unless both of ML B31 and MC1 C9 lamps displayed on lower part of the screen light up, can not be accessed to the card and reading out would not be completed properly.
In this case, check the function of ML adjusting mode select relay (R-36).

Reference only

10.2.9 LANGUAGE, UNIT SETTING

1. Press “LANGUAGE/UNIT” in the maintenance menu.

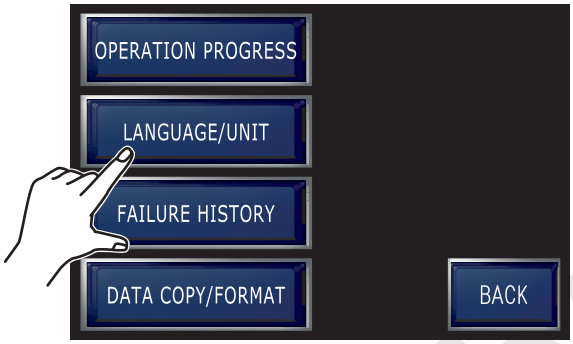

2. Item becomes displayed.
   Select the required language, unit.

	Displayed language	Displayed unit
JPN	Japanese	m, t
ENG (ft·lbs)	English	feet, klbs
ENG (m·t)	English	m, t

Selected item becomes displayed in blue letter.
After select, press OK.

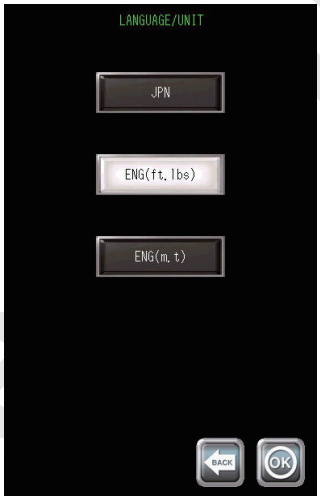

Reference only

10.2.10 ML ADJUSTMENT (NORMAL)

1. Press “ML ADJUSTMENT (NORMAL)” in the maintenance menu.

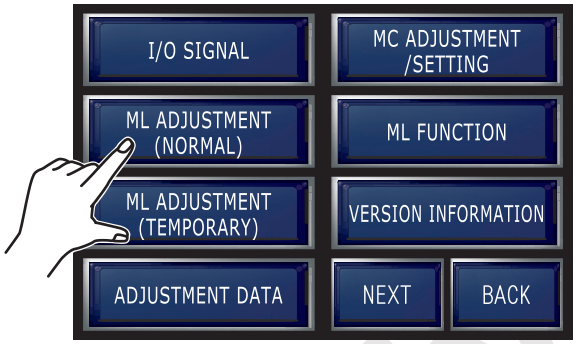

2. Adjustment menu becomes displayed.

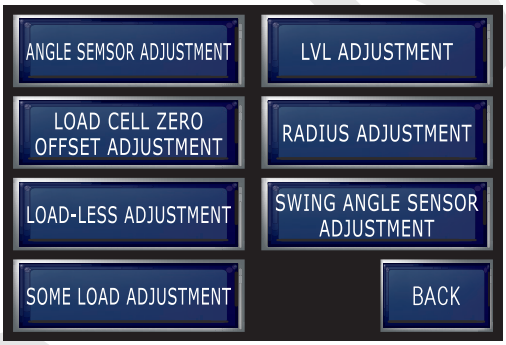

Angle sensor adjustment	This is used when error between display of boom angle, jib angle mast angle become larger and their actual angle become larger or whenever the angle detector is replaced.
Loads cell zero offset adjustment	This is used when output voltage deviate from 1.000 V when load is not applied to load cell. This becomes necessary whenever load detector or cable is replaced.
Load-less adjustment	This is used when the hook weight is not properly displayed.
Some load adjustment	This is used when error becomes large on actual load display after load-less adjustment is completed.
LVL adjustment	This is to change auto stop point (warning point).
Work radius adjustment	This is used when error of work radius display and actual work radius becomes larger.
Swing sensor adjustment	This is used when screen display of swing direction differ from the actual direction. This is also used whenever swing angle sensor (slip ring built-in) is replaced.

Reference only

3. Angle detector adjustment

(1) Select “ANGLE DETECTOR ADJUSTMENT” in the adjustment menu.
Angle detector connected to presently set attachment becomes displayed.
(Figure right shows example of crane with aux. sheave.)
In case with jib, jib angle detector becomes displayed and in case with mast, mast angle detector becomes displayed.
Select the adjustment required angle detector.

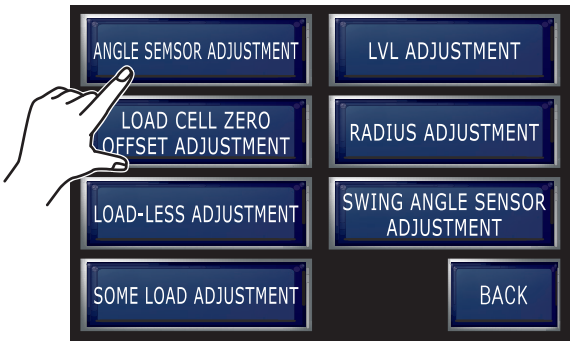

This procedure explains boom angle detector as an example.
Jib angle detector and mast angle detector are adjusted in the same procedure.

After boom is raised close to the upper limit and lower the boom slightly and press “LOWER BOOM ANGLE SENSOR”.

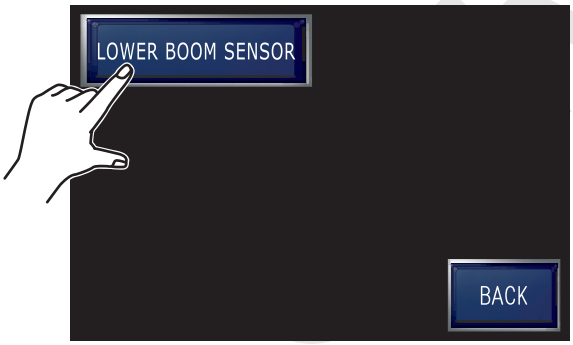

(2) Touch angle indicating area.

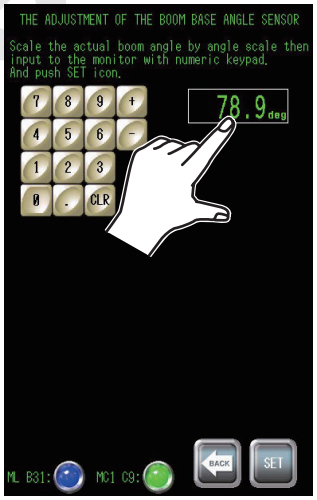

(3) Angle indicating area becomes highlighted and the numeral input becomes possible.

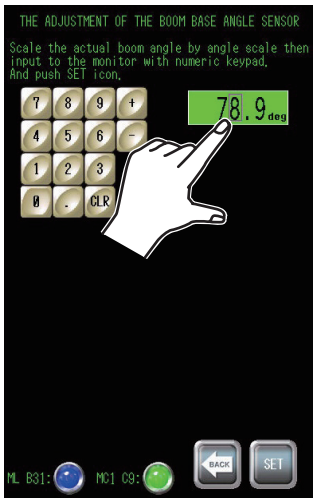

Reference only

(4) Measure the actual boom angle with the level gauge and angle meter and input the number with numeric keypad.

Ex) In case of input “79.5”, input (7), (9), (.), (5).

After input, press SET.

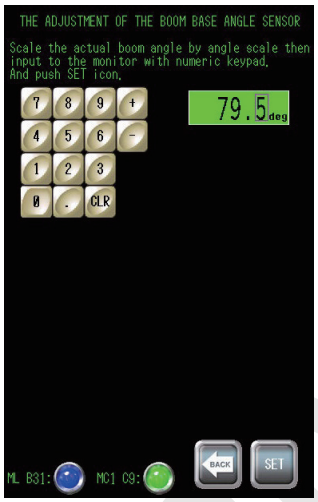

(5) Lower the boom for more than 25 degrees and stop.
Then press SET.

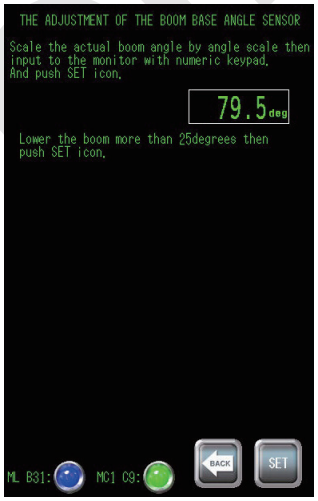

CAUTION

Angle of 25 degrees is just a guideline for lowering the boom, and this guideline should not be necessarily observed.
However, remember that the adjustment is more effective if the boom is lowered with an angle as large as possible.

(6) Touch the second angle indicating area.

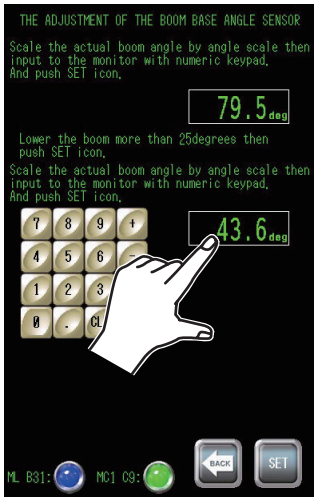

Reference Only

(7) Angel indicating area becomes highlighted and the numeral input becomes possible.

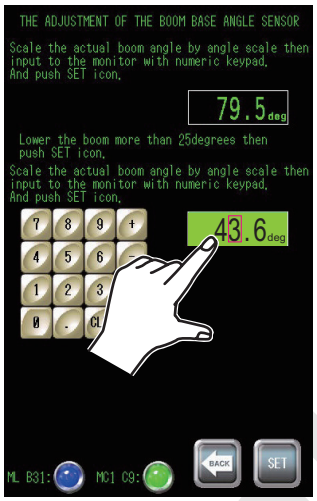

(8) Measure the actual boom angle with the level gauge and angle meter and input the number with numeric keypad.

Ex) In case of input “43.2”, input (4), (3), (.) (2). After input, press SET.

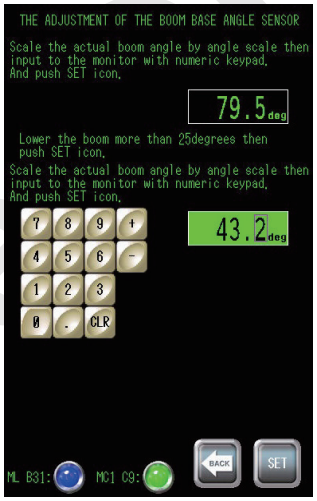

(9) When the adjustment is properly completed, the message shown right is displayed.

By pressing SET, the screen returns to the previous one.

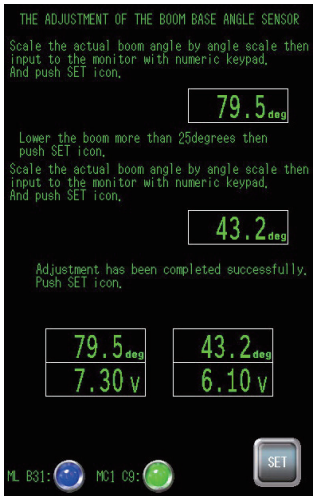

Reference only

(10) If the adjustment is not properly completed, the message shown right is displayed.
By pressing SET, screen returns to the one during adjusting.
Re-check the procedure and start adjustment again.

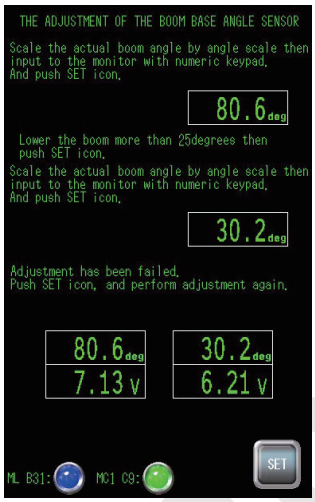

Reference Only

4. Load detector zero adjustment

(1) Select “LOAD CELL ZERO OFFSET ADJUSTMENT” in the adjustment menu.
The load detectors used in the presently set attachment become displayed.
Select the required load detector to be adjusted.

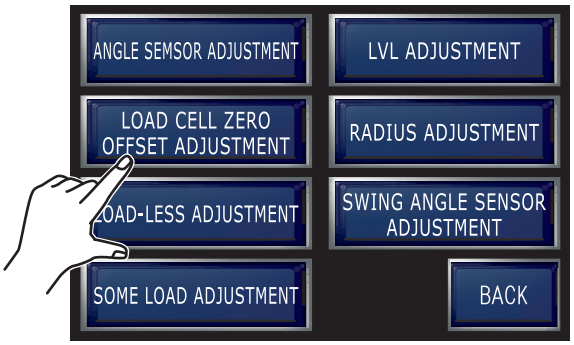

* Right screen shows normal crane as an example.

In case of adjusting jib load detector, luffing configuration must be selected.
If plural load detectors are used, plural load detectors become displayed.
Select the required load detector to be adjusted.

(2) Release the tension on the boom hoist rope to “zero” by releasing the boom hoist rope as much as possible or by removing the load detector.
Press SET when prepared.

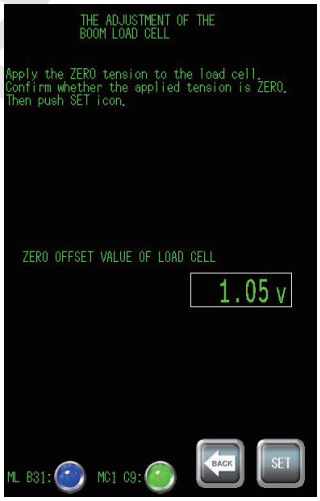

CAUTION

When the displayed load cell voltage is not in the rage from 0.8 to 1.2 V, the load cell is judged to be faulty and the adjustment is rejected.
In such a case, replace the load cell.

Reference only

(3) The message shown right becomes indicated when the adjustment is properly completed.
By pressing SET, screen returns to the previous one.

The adjustment is properly completed, press SET, the screen returns to the previous one.
If the adjustment is fail, resetting again from the previous screen.

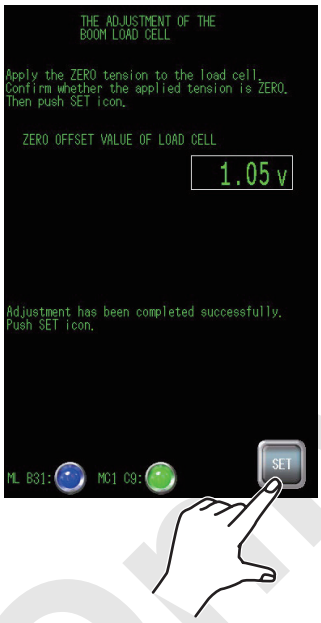

(4) If the adjustment is not properly completed, the message shown right is displayed.
By pressing SET, screen returns to the one during adjusting.
Re-check the procedure and start adjustment again.

Reference Only

5. Load less adjustment

Set the load to only the hook installed.
Adjust each hook position based on the table below.

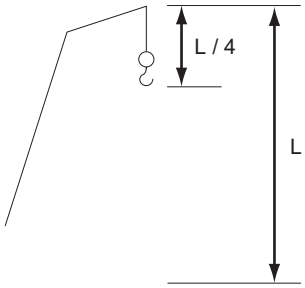

Reference Only

10000A-1

Type of attachments	Mode	Weight of hook block to be entered during adjustment	Position of hook block when load is adjusted	
			Hook of mode selected	Other hooks
Crane	Main lifting	Main hook	Boom foot	–
Crane with auxiliary sheave	Main lifting	Main hook + Aux. sheave hook	Boom foot	1/4 of distances from boom point sheave to ground.
	Auxiliary sheave lifting	Main hook + Aux. sheave hook	Boom foot	
Crane with jib	Main lifting	Main hook + Jib hook	Boom foot	
	Jib lifting	Main hook + Jib hook	Boom foot	
Luffing crane (with main hook)	Main lifting	Main hook + Jib hook	Boom foot	
	Jib lifting	Jib hook	Boom foot	
Luffing crane (with aux. sheave hook)	Jib lifting	Jib hook + Aux. sheave hook	Boom foot	
	Auxiliary sheave lifting	Jib hook + Aux. sheave hook	Boom foot	
Luffing crane (jib hook only)	Jib lifting	Jib hook + Aux. sheave hook	Boom foot	

Perform this adjustment by boom lowering motion control.
Adjusting points shall be max. boom (jib) angle point and min. boom (jib) angle point and random selected 5 points between them.

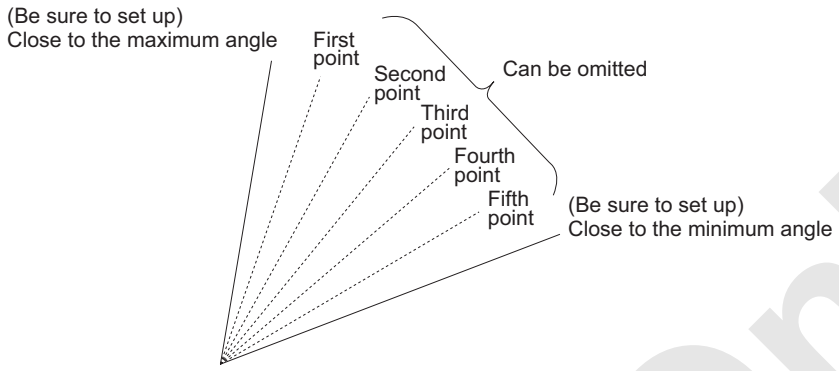

Max. boom (jib) angle and min. boom (jib) angle points are essentially required but points between them can be neglected.
There is no rule on number of points and their interval.

However more precise adjustment becomes possible with more points on wider angle range.

Adjustment would become easier if the adjustment points (angle) are set in advance in the range between the upper limit angle and lower limit angle divided into 6 in the adjustment required configuration.

Reference Only

(1) Select “LOAD-LESS ADJUSTMENT” in the adjustment menu.
Touch load indicating area.

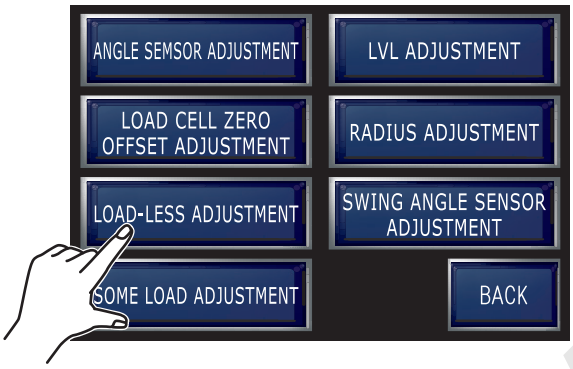

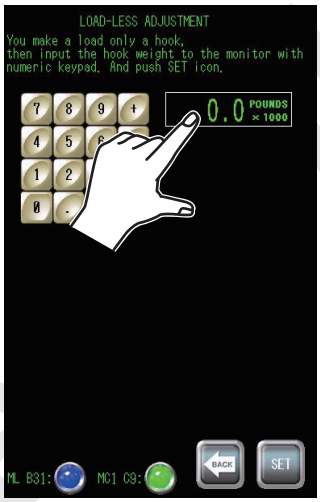

(2) Load indicating area turns highlighting and numeral input becomes possible.

Input hook weight with the numeric keypad.
Refer to the table in the previous page for hook weight to be input.

Ex) In case of input “2.0”, input (2), (.), (0).

After input, press SET.

After raising the boom to almost the upper limit angle and then lower by about 1 degree and then stop.

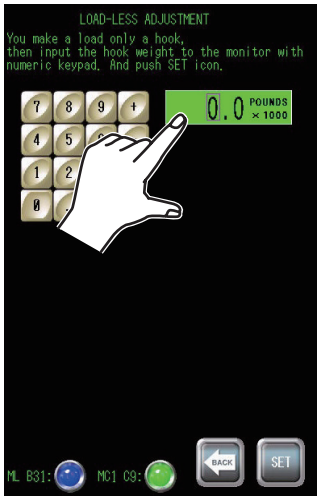

CAUTION

There is a some error stopped in boom raising and boom lowering motion.
So ensure to stop in boom lowering.

Reference only

(3) Press SET.

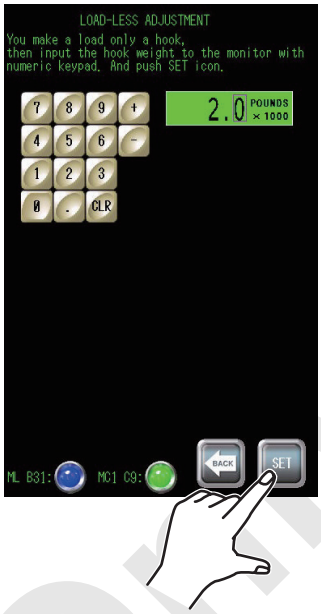

(4) Lower the boom and stop.
Then press SET.
During boom lowering motion, control the hook raising motion to keep the hook in the same height.

If the points in between are to be skipped, press SKIP.
If "SKIP" is selected, all the adjustment points in between are skipped.

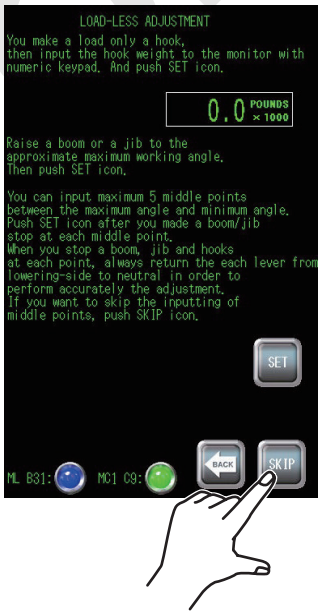

(5) By pressing SET, message memorizing the first point is displayed.

After lowering the boom, press SET.

If the points in between are to be skipped, press SKIP.
If "SKIP" is selected, all the adjustment points in between are skipped.

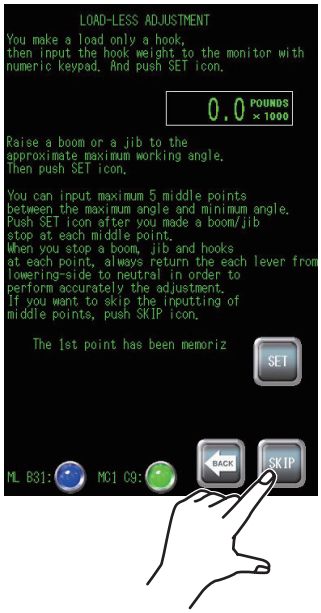

Reference Only

(6) By pressing SET, message memorizing the second point is displayed.

Second point is memorized.
After lowering the boom further, press SET.

If the points in between are to be skipped, press SKIP.
If "SKIP" is selected, all the adjustment points in between are skipped.

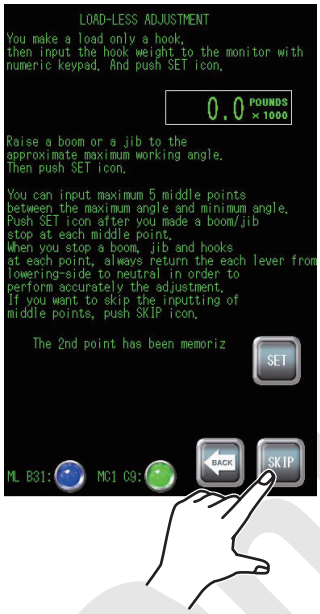

(7) Repeat the adjustment in the same way in sequence.
When 5th point is memorized, message requesting to set the angle to minimum and press SET is displayed.

Lower the boom to almost minimum angle and press SET.

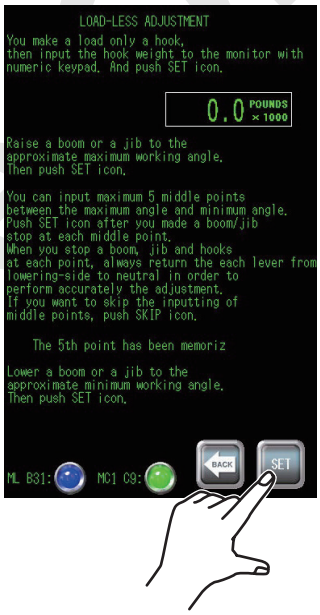

Reference Only

(8) If the adjustment is properly completed, the message shown right is displayed.

At the same time K1, K2 values are displayed as adjustment result.

By pressing SET, screen returns to the previous one.

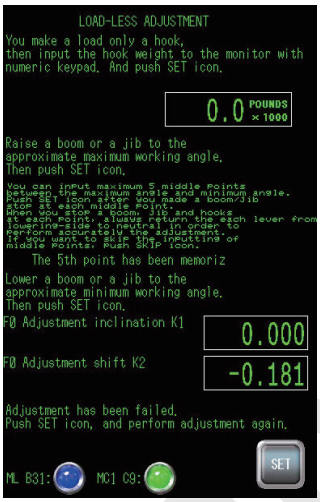

If the adjustment is not properly completed, the message shown right is displayed.

After pressing SET, start adjustment again.

In the load-less adjustment, if adjustment on more than two boom (jib) length is done, on boom (jib) length which is not adjusted yet, calibration by interpolation by two closest length adjustment values is applied.

Reference Only

6. Some load adjustment

Only the different point to load-less adjustment is the first load value input.
The rest are same.
Different point to load-less adjustment ONLY is explained here.

Firstly lift the weight known load.
Select “SOME LOAD ADJUSTMENT” in the adjustment menu.
By touching load indicating area, display turns highlighting and numeral input becomes possible.
Input load weight actually being lifted with the numeric keypad and press SET.

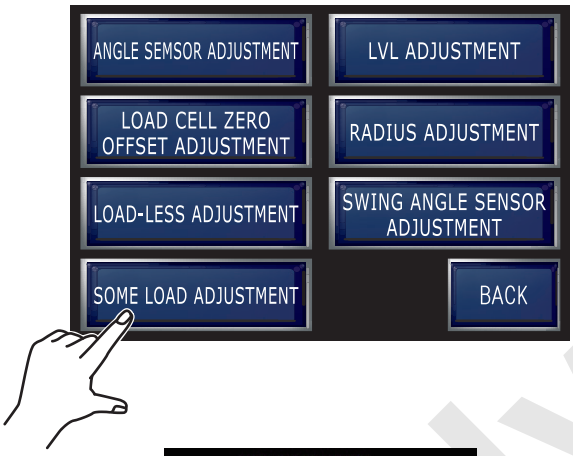

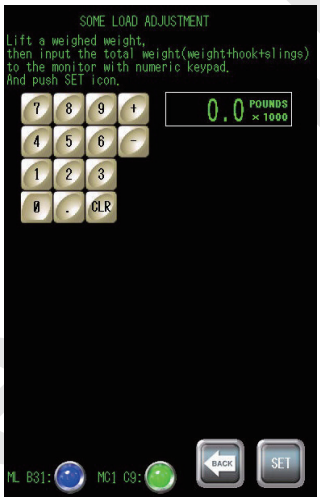

* This includes weight of hook and lifting sling.

The procedure afterward is as same as load-less adjustment.
Proceed as same as load-less adjustment.

If adjustment is completed, the screen is displayed as shown right.

At the same time, K3, K4 values are displayed as the adjustment result.

By pressing SET, screen returns to the previous one.

If adjustment is not completed, following is displayed.
“Adjustment is in error”.
Press SET and readjust.

After pressing SET, start readjustment.

CAUTION

The some load adjustment is likely to receive wind effect.
Therefore if the actual load display changes significantly, wait until the lifting load stops swinging and then press SET icon.

Reference only

7. LVL adjustment

LVL means the load ratio to stop automatically. Normally auto stop load ratio is set at 105% but with this function this load ratio can be changed to 90 to 110%.

⚠ CAUTION

LVL function is only effective when "EFFECTIVE" is set in LVL setting in the setting.
If "NOT EFFECTIVE" is selected, normal 105% is applied even value is changed in this function.

(1) Select "LVL ADJUSTMENT" in the adjustment menu.
Touch the load ratio indicating area.

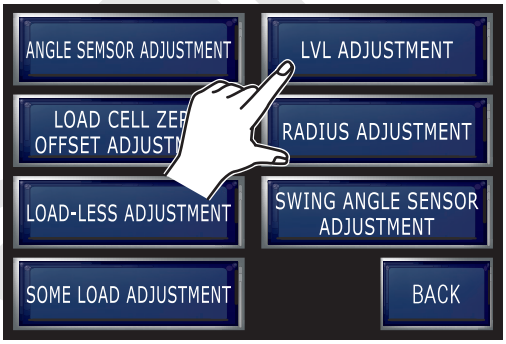

(2) The indicating area becomes highlighted.
Input value with the numeric keypad.

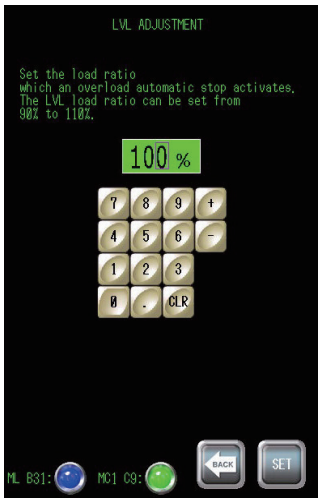

Reference Only

(3) After value input is completed, press SET.
Setting is completed and screen returns to previous one.

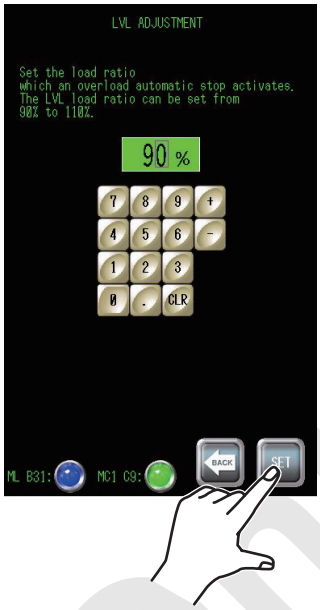

Reference Only

LVL FUNCTION

The following drawings are some examples of LVL function.

(A) When the LVL function is OFF.
If the loading ratio is become 105% while the LVL function is not effective, operation toward the hazardous side is automatically stopped. Note that hysteresis of 5% must be considered for restoration from the automatic stop status.
When the loading ratio is returned to 100%, the automatic stop status is cancelled.
When the loading ratio is 90% or more, intermittent warning alarm sounds are emitted.
Continuous alarm sounds are emitted when the loading ratio is 100% or more.

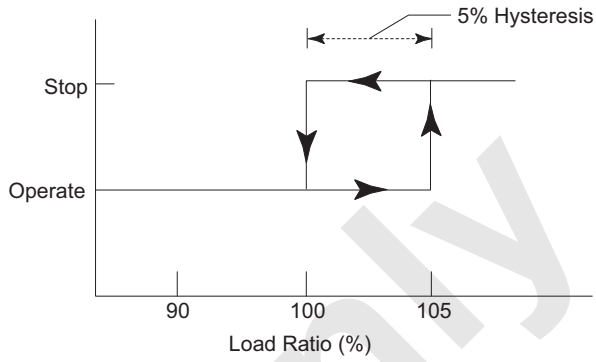

(B) When the LVL function is ON and set to 90%.
If the loading ratio become 90%, operation toward the hazardous side is automatically stopped.
The machine is restored from the automatic stop status when the loading ratio is less than 85%.
When the loading ratio becomes 90% with the continuous alarm sounds are emitted.
No forecasting sound (intermittent sound) will be emitted.

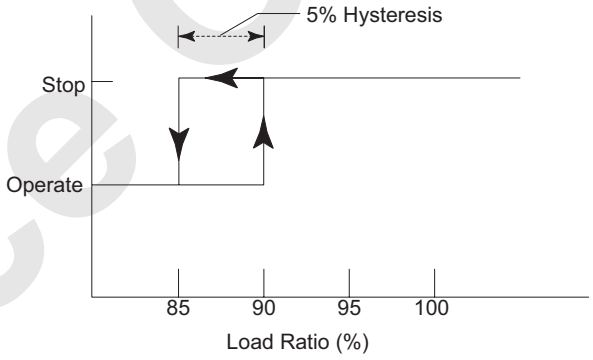

(C) When the LVL function is ON and set at 110%.
When LVL is set at 110%, the function will be taken as shown in the figure.
Please note the following points.

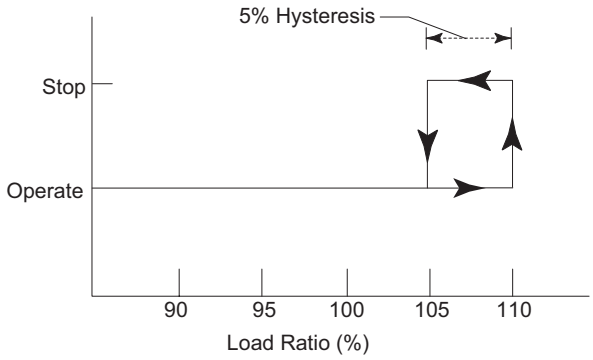

- LVL is also affected by the work area limit parameters. It operates by referencing the smaller value set by the Load Setting switch in "Setting the Work Area Limit Values".
- The LVL operational lag (hysterics) is -5%.
- The load ratio is not affected by LVL function.
- When the loading ratio is 90%, forecasting sounds (intermittent sounds) are emitted.
  Alarm sounds (continuous sounds) are emitted when the loading ratio is 100% (not affected by the LVL function).

Reference Only

8. Work radius adjustment

This is used when difference between the displayed work radius and the actual work radius is large due to the boom deflection etc.

CAUTION

Ensure to check if there is any error in angle display. If error is larger than 0.3 degrees carry out angle adjustment first.

(1) Raise the boom (jib) to almost upper limit angle and then lower by about 1 degree and then stop.

Select “RADIUS ADJUSTMENT” in the adjustment menu.

Touch the radius display area.

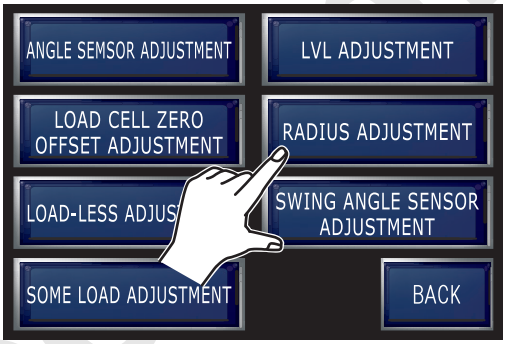

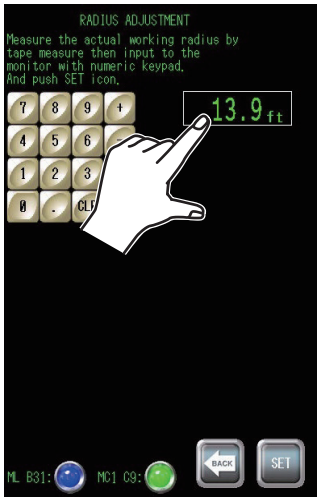

Reference only

(2) Radius display area becomes highlighted and the numeral input becomes possible.

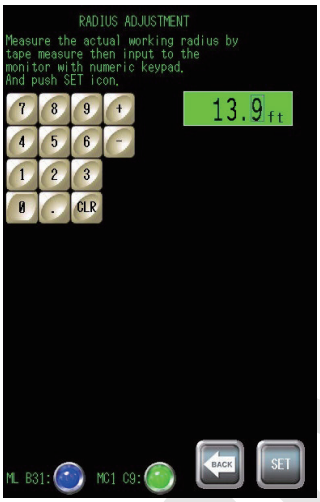

(3) Input actually measured work radius with the numeric keypad.

Ex) In case of input “13.9”, input (1), (3), (.) (9).

After input, press SET.

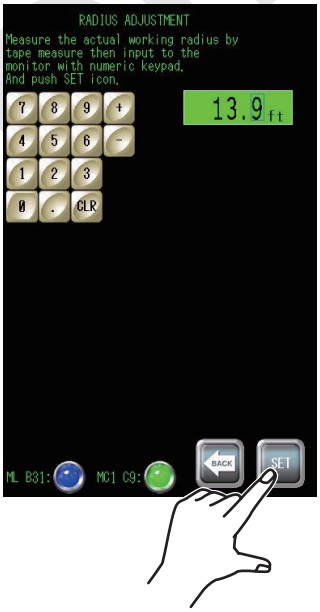

(4) Lower the boom (jib) to almost min. angle and stop.
Then press SET.

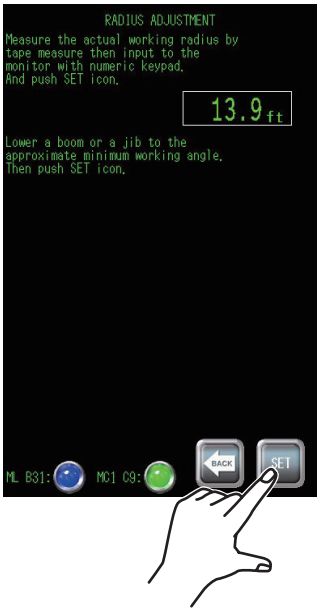

Reference only

(5) Touch the radius display area.

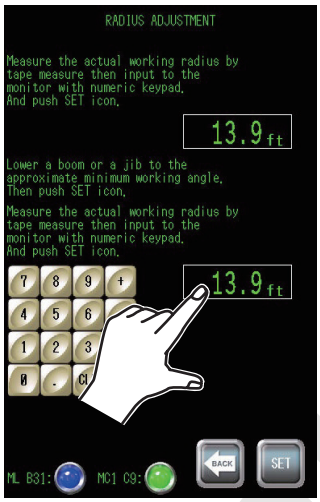

(6) Input actually measured work radius with the numeric keypad.

Ex) In case of input “16.9”, input (1), (6), (.) (9).

After input, press SET.

(7) If the adjustment is properly completed, the message shown right is displayed.

By pressing SET, screen returns to the previous one.

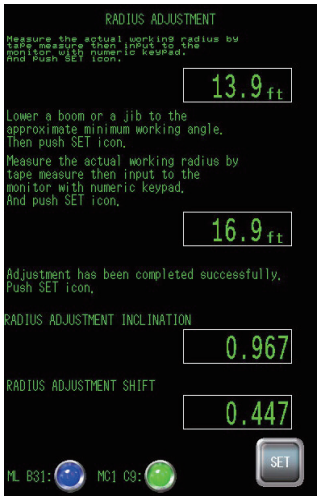

Reference only

(8) If the adjustment is not properly completed, the message shown right is displayed.

By pressing SET, screen returns to the one during adjusting.
Re-check the procedure and start adjustment again.

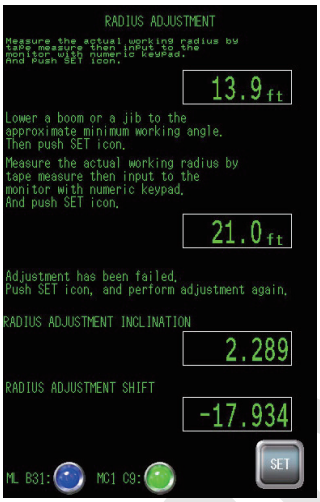

Reference Only

9. Swing angle adjustment

(1) Select “SWING ANGLE ADJUSTMENT” in the adjustment menu.

Face the crane toward front (idler side of crawler) and fix with the swing lock pin.

Press FR.

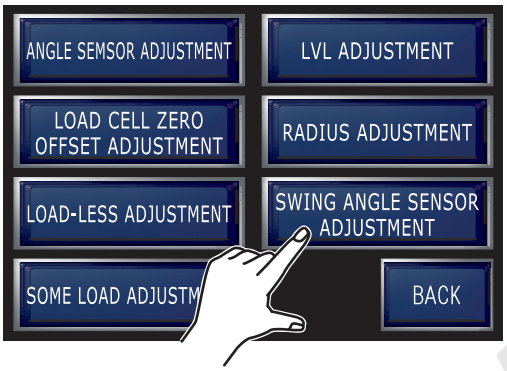

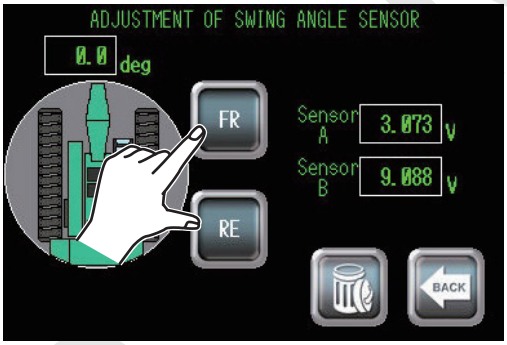

(2) If the display changes from FR to OK, front side adjustment is properly completed.

Swing the crane by 180 degrees and face it toward rear (travel motor side) and fix with the swing lock pin.

Press RE.

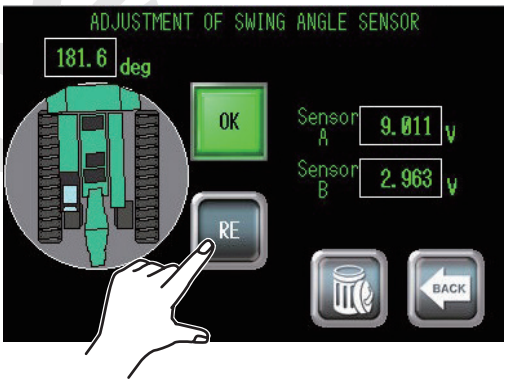

(3) If display changes from RE to OK, rear side adjustment is properly completed.

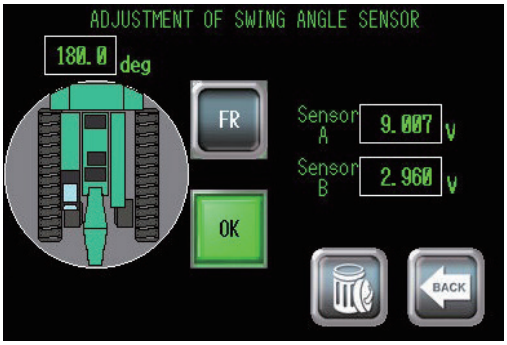

Reference only

(4) When either FR or RE is pressed and “NG” is displayed, adjustment is in error.

Check if the crane direction or sensor voltage is correct and start adjustment again.

Right screen indicates “NG” in rear adjustment as an example.

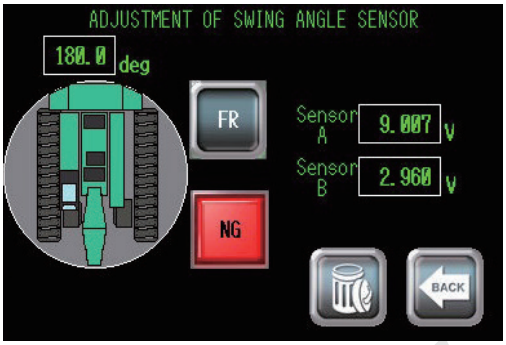

(5) To reset adjusted value, press .
“OK” is displayed on both FR, RE and the values are reset.

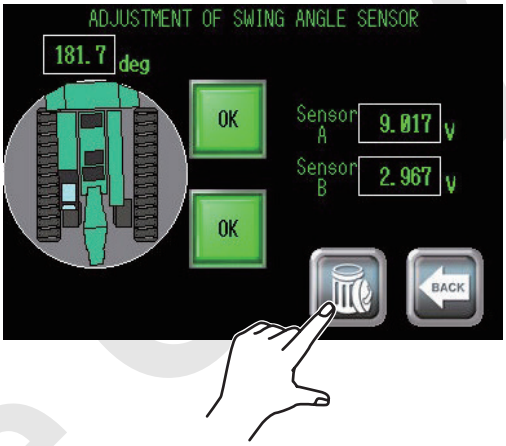

Reference Only

10.2.11 ML ADJUSTMENT (TEMPORARY)

This adjustment is used to match with the load temporary when error exists in load display due to load detector abnormality etc.
There is no limit in adjustment value and adjustment would become possible even when error occurs in load-less/some load adjustment in “10.2.10 ML ADJUSTMENT (NORMAL)”.
However if the crane configuration setting (setting of attachment) is changed, adjusted value would be deleted.
Use this adjustment ONLY for emergency case.

1. Press “ML ADJUSTMENT (TEMPORARY)” in the maintenance menu.
   Adjustment possible load detectors become displayed. Select the required one.

Adjustment items become indicated.
Select the required one.
The procedure of “LOAD-LESS ADJUSTMENT”, “SOME LOAD ADJUSTMENT” are same as “LOAD-LESS ADJUSTMENT”, “SOME LOAD ADJUSTMENT” of “10.2.10 ML ADJUSTMENT (NORMAL)”.

Reference Only

10.2.12 OPERATION PROGRESS

1. Press “OPERATION PROGRESS” in the maintenance menu.
   Information of internal operation will be displayed.

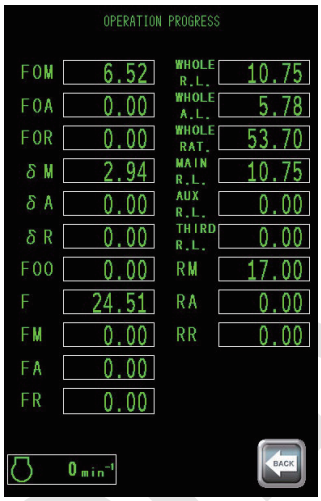

Symbols	Details
FOM	Tare weight component during front winch lifting with current radius
FOA	Tare weight component during rear winch lifting with current radius
FOR	Tare weight component during third winch lifting with current radius
δM	Load coefficient during front winch lifting with current radius
δA	Load coefficient during rear winch lifting with current radius
δR	Load coefficient during third winch lifting with current radius
F00	Tare weight component other than weight of hook block with current radius (during simultaneous lifting only) (Not used)
F	Raising guy line tension
FM	Front winch wire rope tension (w/ front winch load cell) (Not used)
FA	Rear winch wire rope tension (w/ Rear winch load cell) (Not used)
FR	Third winch wire rope tension (w/ third winch load cell) (Not used)
WHOLE R.L.	Whole rated load (rated load during selected mode)
WHOLE A.L.	Whole actual load (actual load during selected mode)
WHOLE RAT.	Whole moment ratio (value indicated in bar gauge)
MAIN R.L.	Front winch rated load with current radius on the basis of data
AUX. R.L.	Rear winch rated load with current radius on the basis of data
THIRD R.L.	Third winch rated load with current radius on the basis of data
RM	Calculated front winch operating radius before correction by radius adjustment
RA	Calculated Rear winch operating radius before correction by radius adjustment
RR	Calculated third winch operating radius before correction by radius adjustment

Reference Only

EXAMPLE OF USING OPERATION PROGRESS SCREEN

The actual load W can be indicated by the formula shown below.

$$\text{Actual load } W = \frac{F - (FO \times k1 + k2)}{(\delta \times k3 + k4)}$$

- F: Hoist guy line tension
- FO: Tare weight component (M.A.R)
- k1: Load-less adjustment value (Span)
- k2: Load-less adjustment value (Shift)
- k3: Some load adjustment value (Shift)
- k4: Some load adjustment value (Span)
- δ: Load coefficient (M.A.R)

Suppose the values above are indicated shown below and the indicated actual load is 2 t, when a load weighing 5 t is lifted with the front winch.

F = 4.97
FOM = 2.28
δ = 1.33

If neither load-less adjustment nor some load adjustment is carried out, and factors from k1 to k4 are ignored, the theoretical value F required for the actual load of 5 t can be found by the using the formula above, as shown below.
F = 5 × 1.33 + 2.28 = 8.93
Where, the actual value F is obviously smaller than the theoretical F.

Reference Only

Next, the F can be found by the formula shown below.

Load cell rated capacity (depending on the machine models)

$$\text{Hoist guy line tension } F = \frac{5 \times (\text{present load cell voltage - load cell zero adjustment value})}{(5 - \text{load cell zero adjustment value}) \times 0.08333 \times (1.02 \text{ or } 0.98)}$$

Load cell rated voltage

1/reeving rope coefficient (depending on the machine models)

Correction coefficient for lowering (depending on the machine models)

Correction coefficient for raising (depending on the machine models)

If the load cell zero point adjustment has not been carried out, adjustment value is 1, and the coefficient is 1.02 if the boom lowering stopped.
In such a status, if the load cell voltage is calculated with using the formula above and the value when the F is 4.97, the present load cell voltage is 1.34 V.
In a similar manner, the load cell voltage is 1.61 V, when the theoretical tension F is 8.93.
Then check the load cell voltage on the I/O signal check screen.
If it is close to 1.34 V as stated above, the detected load cell voltage is smaller than the theoretical value.
In this case, the load cell may be faulty.

Reference Only

10.2.13 VERSION INFORMATION

1. Press “VERSION INFORMATION” in the maintenance menu.
   Each part number and version of ML program, monitor, MC1 program, MC2 program, ML data are displayed.

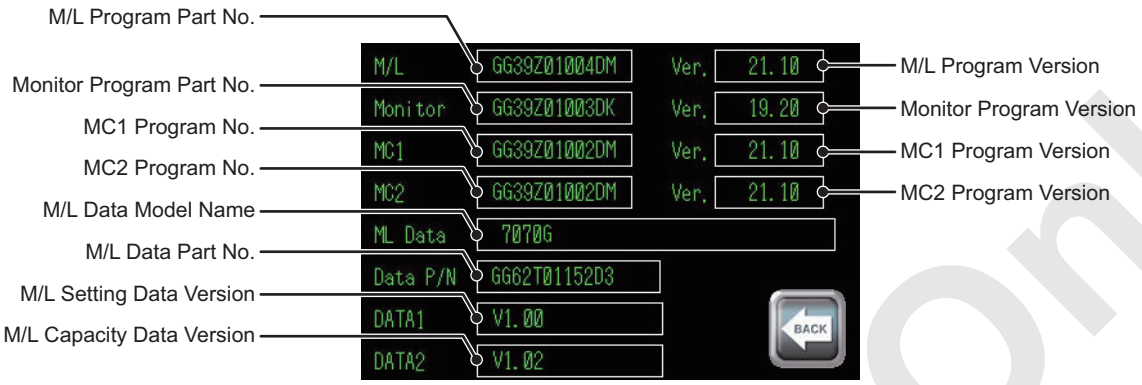

Reference Only

10.2.14 FAILURE HISTORY

1. Press “FAILURE HISTORY” in the maintenance menu.

2. Items are displayed.

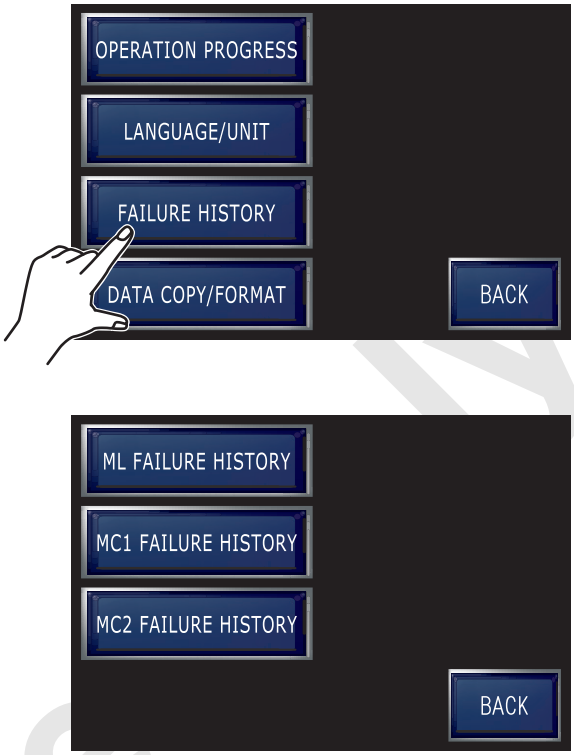

Reference only

3. ML failure history

Press “ML FAILURE HISTORY” in the menu.
Past failures become displayed from latest one in order to max. 20 items.
Failure content is displayed by code.
Check the contents by the table in operator’s manual refer to the article 3 “MESSAGE TABLE”.

- DELETING FAILURE HISTORY

When the failure record is to be deleted, press .
The message right becomes displayed.

In case of deletion, press .
In case of not deletion, press .
Press for more than 1 second.
By pressing , data is deleted.

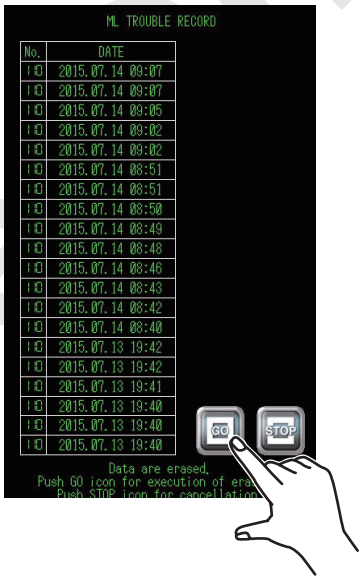

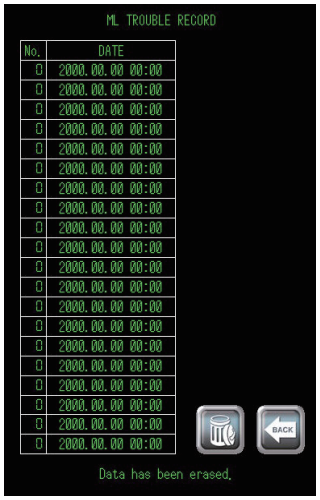

Reference only

4. MC1 failure history

Press “MC1 FAILURE HISTORY” in the menu.
Past failures become displayed from the latest one in order to max. 200 items (10 item × 20 page).
By page can be scrolled up and by page can be scrolled down.
Failure content is displayed by code.
Check the contents by the table in operator’s manual refer to the article 3 “MESSAGE TABLE”.

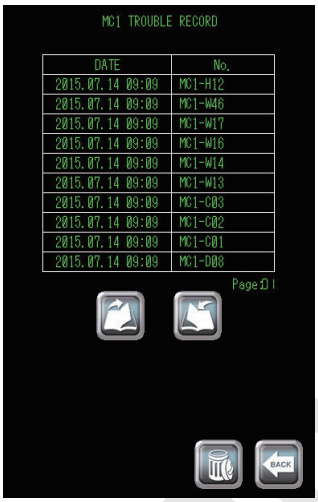

- DELETING FAILURE HISTORY

When the failure record is to be deleted, press .
The message right becomes displayed.

In case of deletion, press .
In case of not deletion, press .
Press for more than 1 second.
By pressing , data is deleted.

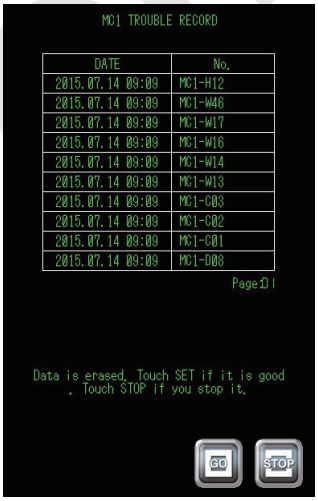

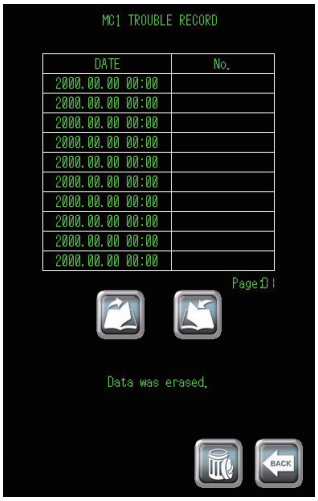

5. MC2 failure history

Press “MC2 FAILURE HISTORY” in the menu.
Display content and handling procedure are same as MC1.

Reference Only

10.2.15 ADJUSTMENT DATA

Press “ADJUSTMENT DATA” in the maintenance menu.
Adjustment data menu becomes displayed.

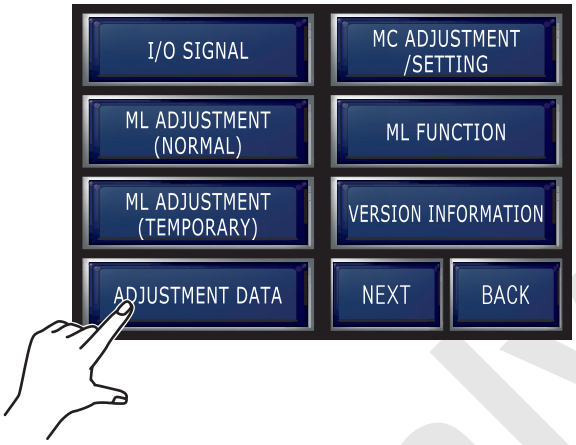

1. Angle sensor

(1) Adjustment data display
Press “ANGLE SENSOR” in the menu.

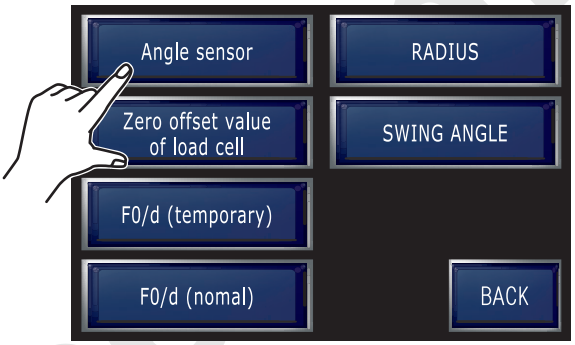

(2) Table of adjustment data of angle detector is displayed.

On this machine, No.1 is used for boom angle detector, No.2 is for crane jib angle detector and No.3 is for tower jib angle detector.

If adjustment is not done yet, shift=0.000, span=1.000 is displayed.

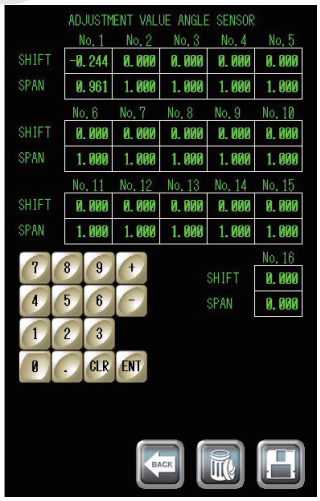

(3) Adjustment data change
In case of changing adjustment data, touch the numeral area to be changed.
Touched area becomes highlighting and the numeral input becomes possible.

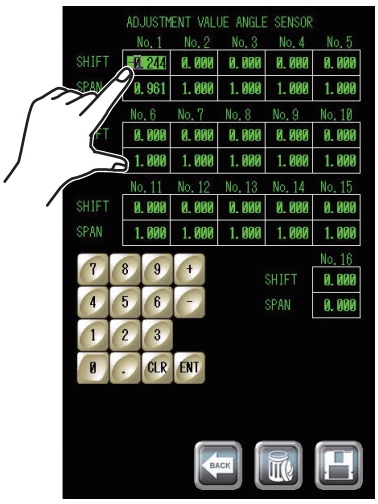

Reference only

(4) Input the value with numeric keypad.

Ex) In case of input “1.103”, input (1), (.), (1), (0), (3).

If there is other changing area, change the value in the same way.
After all input is completed, press [save].

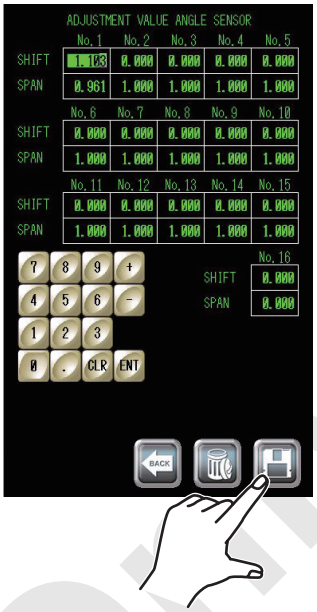

(5) The message right becomes displayed.

Press [BACK].

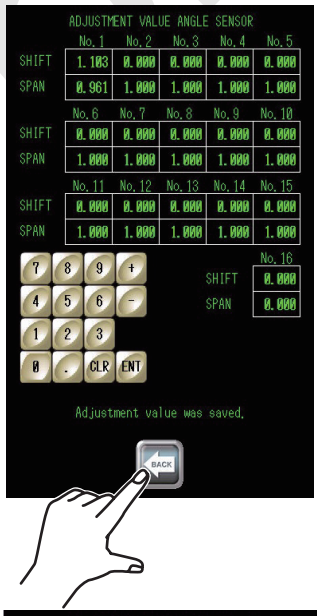

(6) Deleting adjustment data
Touch the area where to be deleted, be turns highlighting.
Press [trash] for 3 seconds to execute.

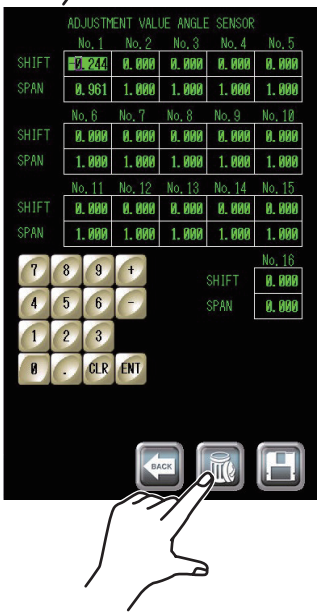

Reference Only

(7) All adjustment data returns to the initial value.
Initial value : Shift = 0.000, Span = 1.000

If either shift or span is deleted, the other one also is deleted.

The message right becomes displayed.
This is to complete deletion.
Press BACK.

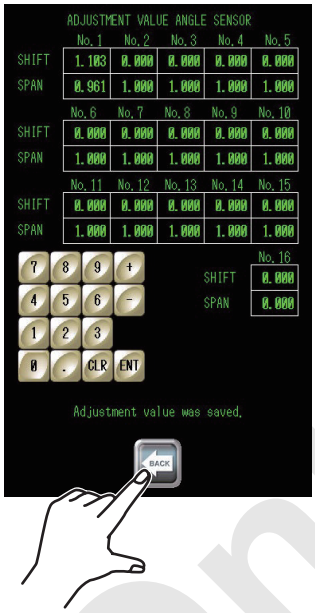

2. Load detector zero adjustment

(1) Adjustment data display
Press “Zero offset value of load cell” in the menu.

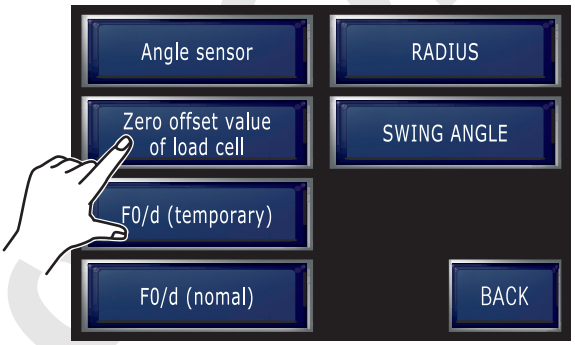

Table of zero point adjustment data of load detector is displayed.
They are displayed by load cell voltage value at time of zero adjustment.

On this machine, No.1 of iL1 is used for boom hoist load detector, No.1 of iL3 is for jib hoist load detector.

If adjustment is not done yet, 1.000 is displayed.

Press BACK to return to the previous screen.

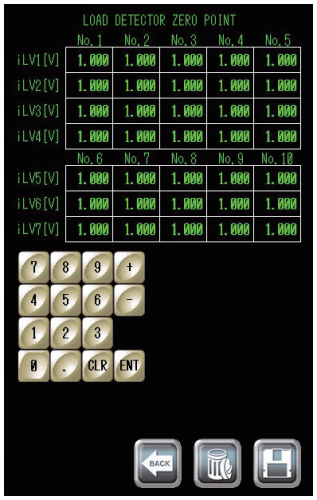

(2) Changing of adjustment data
(3) Deletion of adjustment data

Adjustment data can be changed or deleted with the same way as that of adjustment data of angle detectors.

Reference only

3. Load-less / some load (temporary)

(1) Adjustment data display
Press “F0/d (temporary)” in the menu.
Table of adjustment datas becomes displayed.

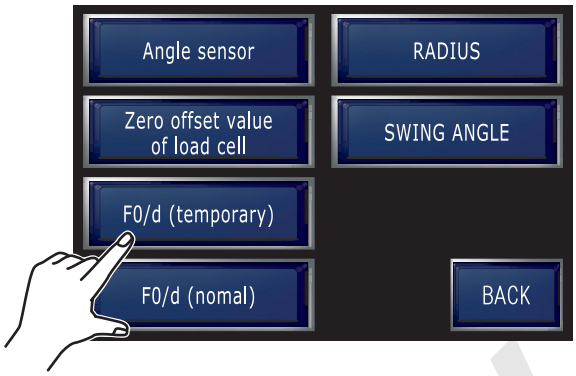

M	Front lifting mode adjustment data
A	Rear lifting mode adjustment data
R	Third lifting mode adjustment data
No	Load-less load adjustment
S.	Some load adjustment

If adjustment is not done yet, shift=0.000, span=1.000 is displayed.

Press BACK to return to the previous screen.

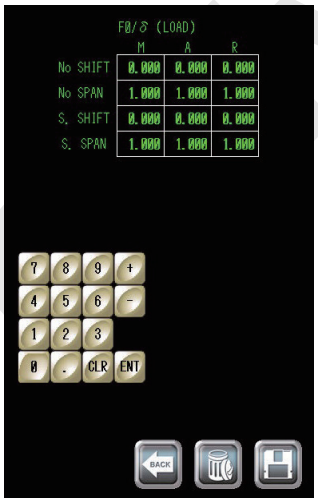

(2) Changing of adjustment data
(3) Deletion of adjustment data

Adjustment data can be changed or deleted with the same way as that of adjustment data of angle detectors.

Reference only

4. Load-less / some load (normal)

(1) Adjustment data display
Press “F0/d (normal)” in the menu.
Table of adjustment datas becomes displayed.

On this adjustment, 10 type of boom length adjustment are possible on each group of 1 to 30.

At first, group 1 becomes displayed.
On every pressing of ➡,
group changes like 2, 3, 4...30.
On every pressing of ⬅,
group changes like 30, 29, 28...2.

No.1 to No.10, adjusted boom length (jib length in case of luffing), shift and span of load-less adjusting become displayed.

If adjustment is not done yet, shift=0.000, span=1.000 is displayed.

When more than two boom (jib) length are adjusted and non adjusted boom (jib) length is used, calibration between closest two length is applied.

(2) Changing of adjustment data
(3) Deletion of adjustment data

Adjustment data can be changed or deleted with the same way as that of adjustment data of angle detectors.

* In case of deletion, displayed group data ONLY is deleted.

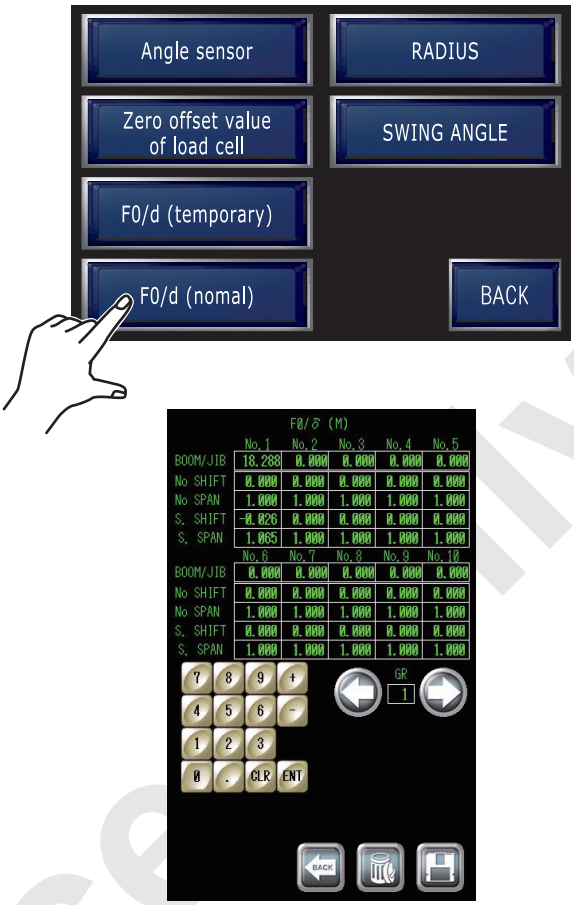

Reference only

5. Working radius

(1) Adjustment data display
Press “RADIUS” in the menu.
Table of adjustment datas becomes displayed.

This adjustment also consists of group 1 to 30 and the first screen indicates group 1 to 15.
By pressing ➡ group 16 to 30 becomes displayed.

Contents of each group is as same as that of “LOAD-LEE/SOME LOAD(NORMAL)”.

If adjustment is not done yet, shift=0.000, span=1.000 is displayed.

(2) Changing of adjustment data
(3) Deletion of adjustment data

Adjustment data can be changed or deleted with the same way as that of adjustment data of angle detectors.

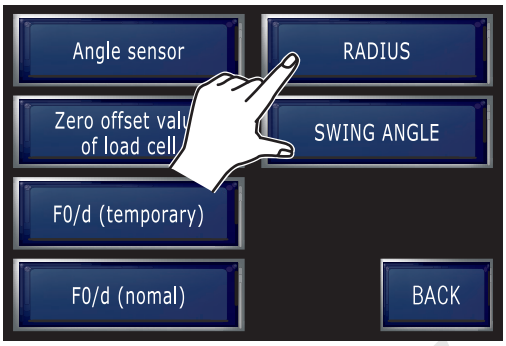

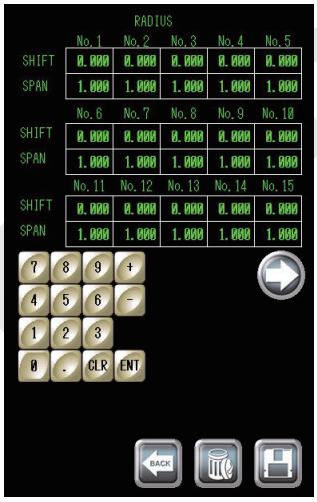

Reference only

10.2.16 DOWNLOAD ML PROGRAM

1. Take out data CF card from ML controller and insert CF card with new program filed in.

* It is possible to write in by filing the program to data CF card.
10000E-1 will be need turn on to "H3" position of drum select switch.

2. Connect write in permit connector CN- 420M and CN-439F on the right upper of the controller.

3. Turn on the key switch.

4. Download is started.

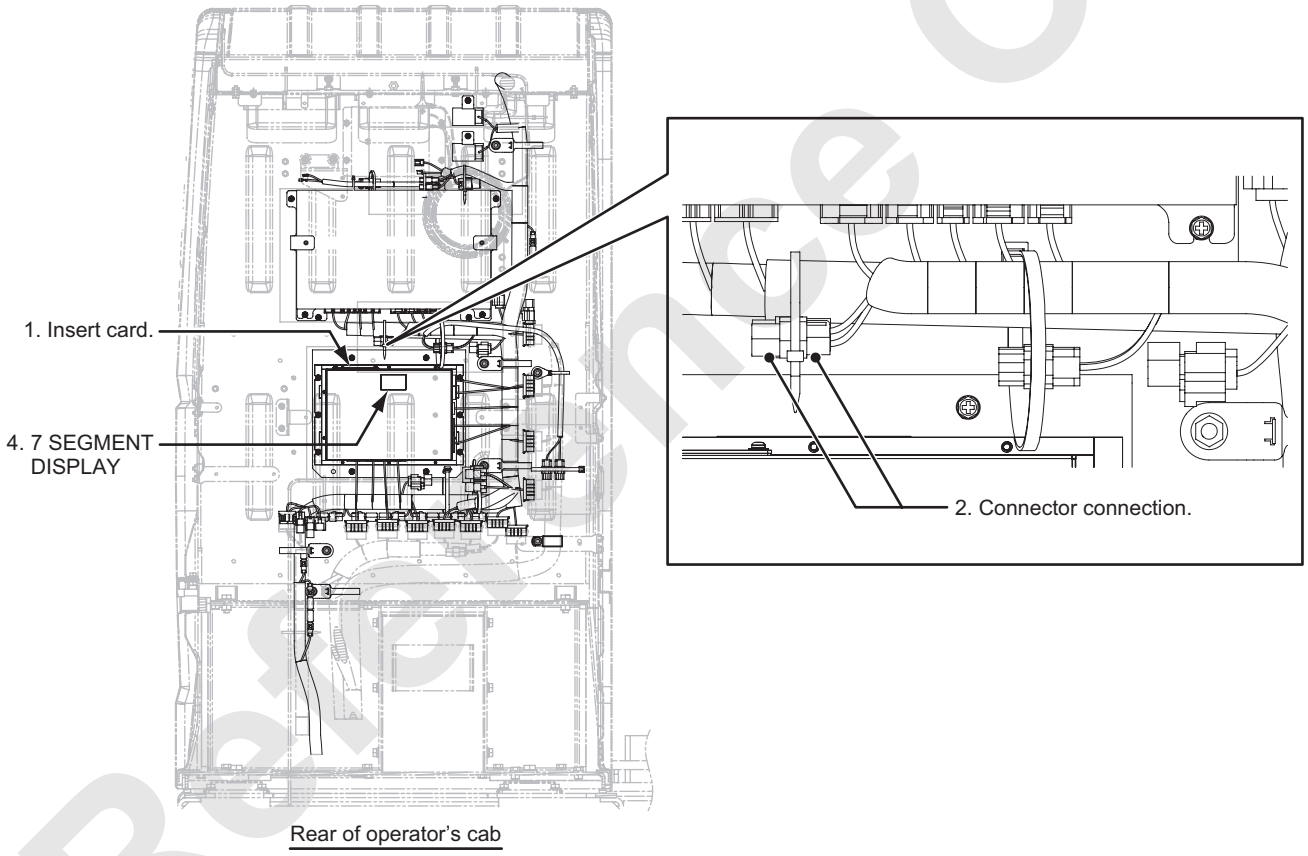

Reference Only

During download, 7 segment display of the controller changes as shown below.

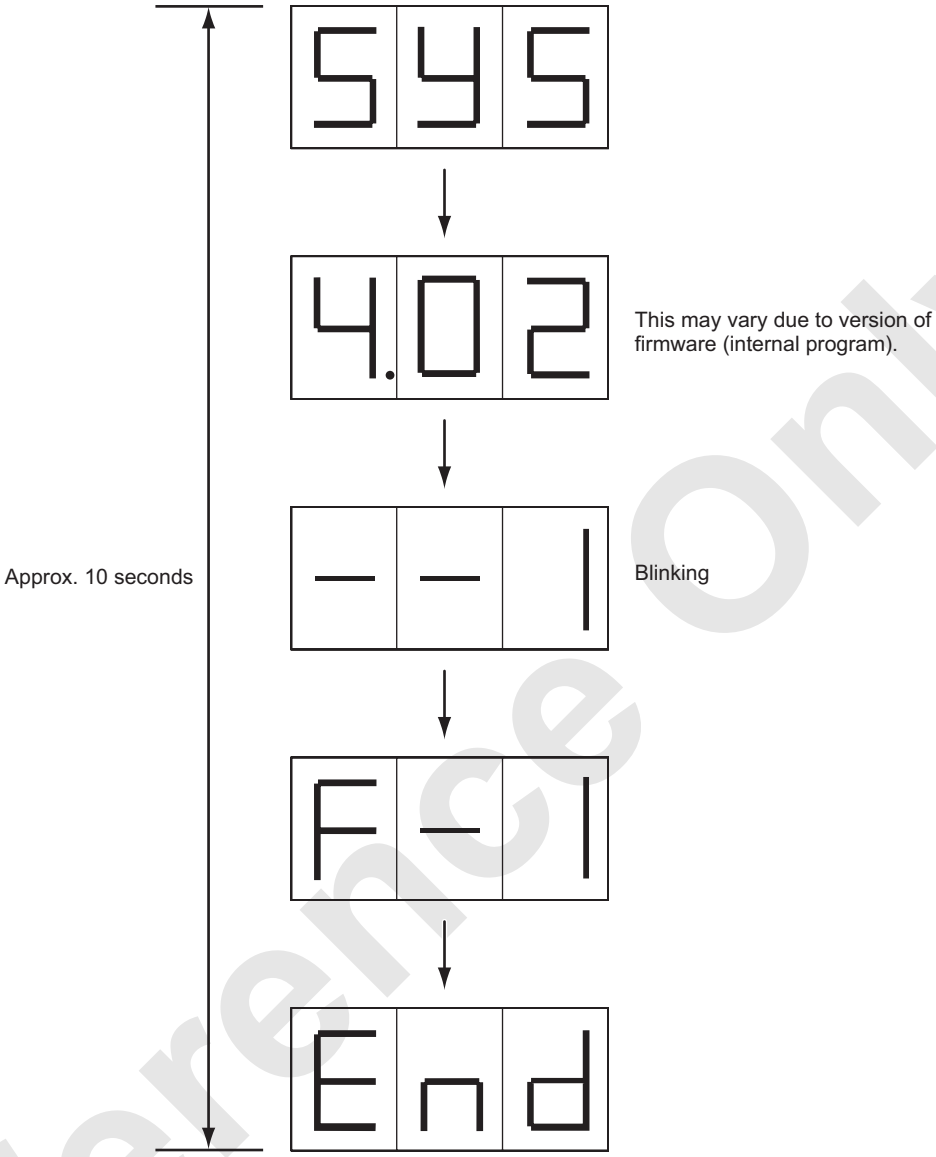

5. When End is indicated, re-writing is completed.

6. Turn OFF the key switch.

7. Pull out write in permit connector.

8. Return the original CF card back to the ML controller.

Reference Only

10.2.17 DOWNLOAD OF MONITOR PROGRAM

1. Insert the CF card with new program filed in to the CF card slot on the back face of the monitor.

* Ensure to close the cover.

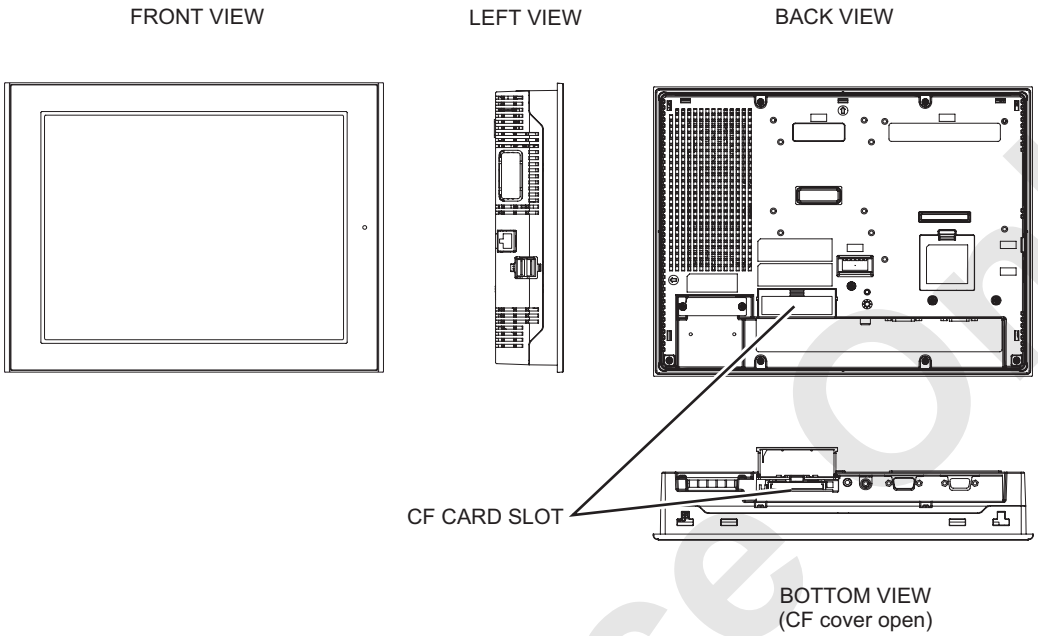

2. Turn the key switch ON and wait for screen to start.

3. When the screen is started, tap on screen corners diagonally in succession.

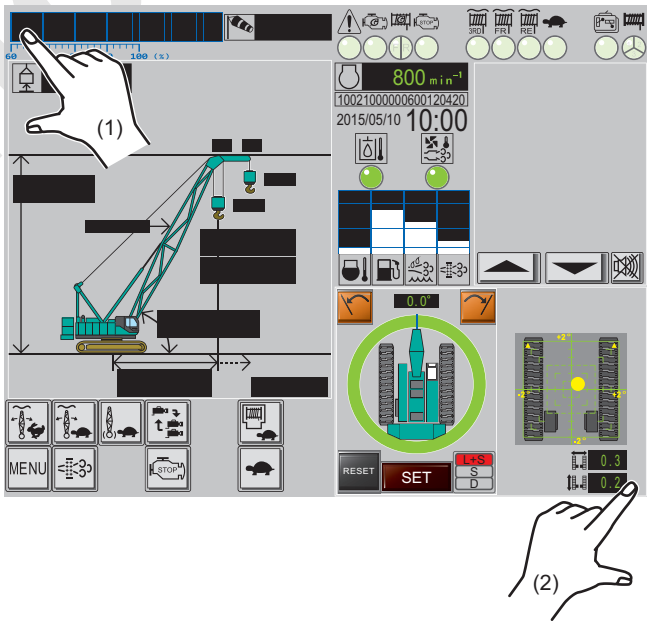

Reference Only

4. Menu becomes indicated on the lower part of the screen.
   Select “CF/USB”.

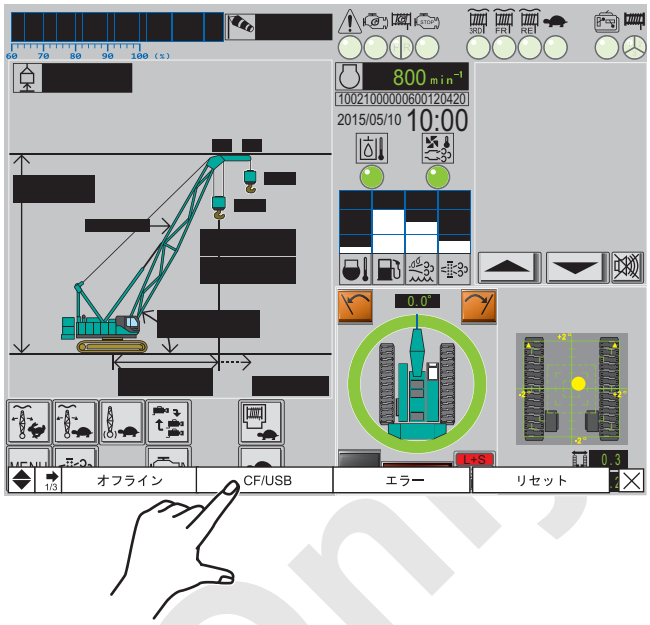

5. Select “CF START”.

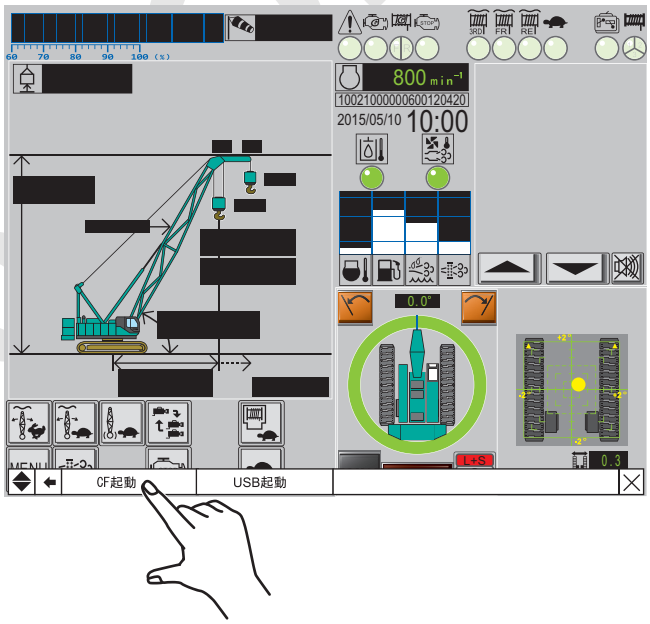

6. If the error as shown right is displayed, check for inserted condition of CF card or cover to be closed.

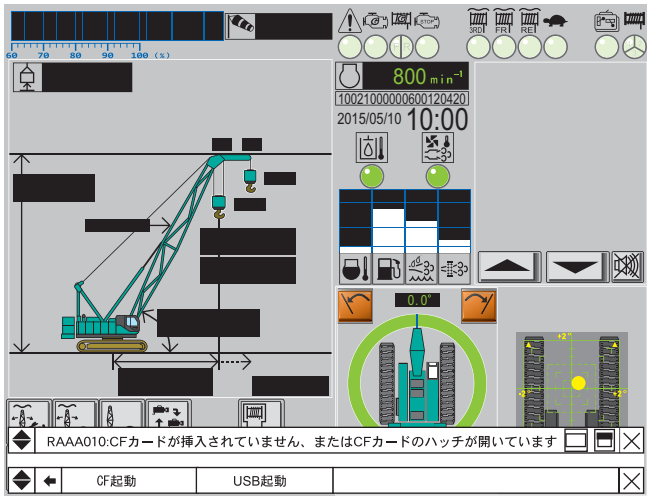

Reference only

7. Select [DOWNLOAD (CF → Display)]

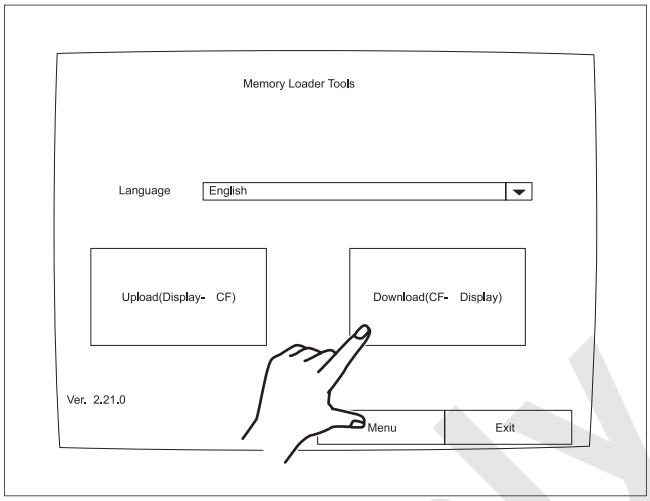

8. Select [Start].

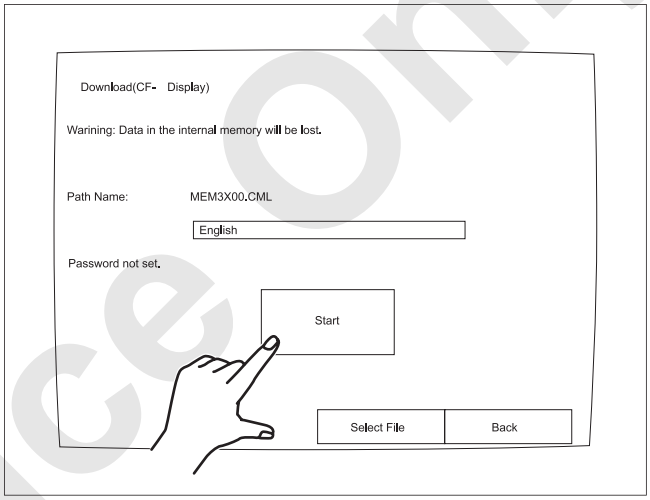

9. Select [Yes].

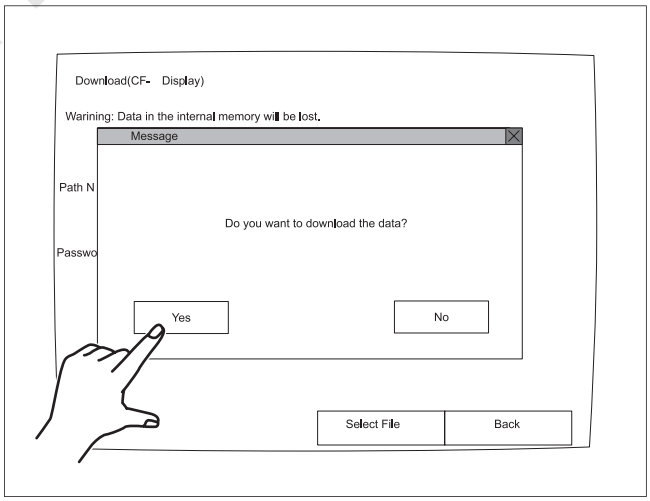

Reference Only

10. Download starts.
    Write in [OS data], [System / Project data] in its order. If properly completed, message as shown right becomes displayed.

    Press [Back].

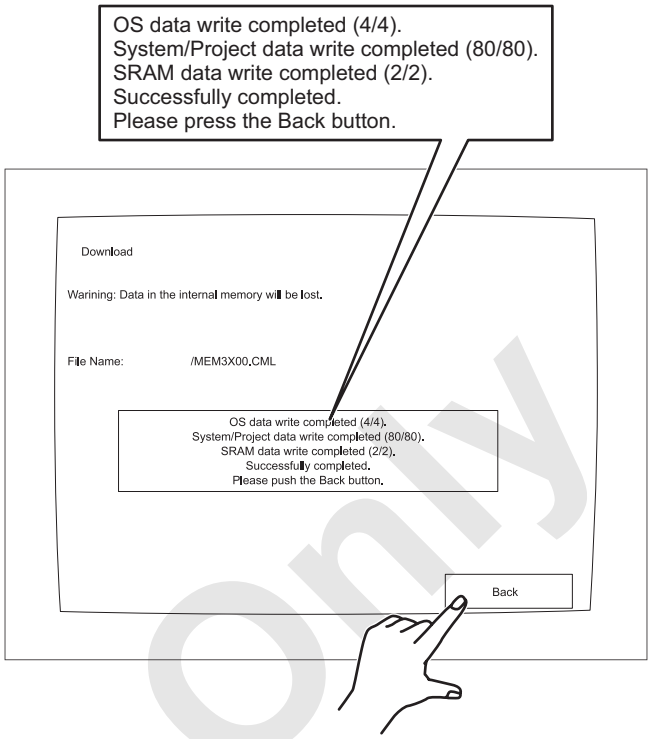

11. Press [Back] to return to the screen before writing in starts.

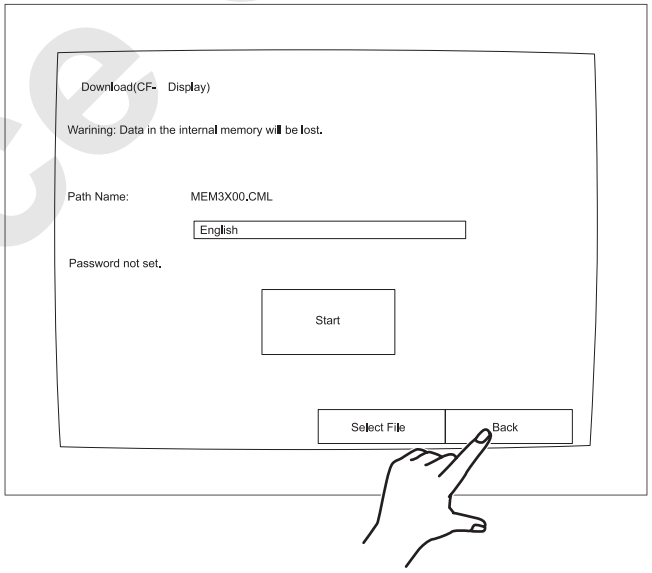

12. Press [Exit] to return to the screen 1 step before.

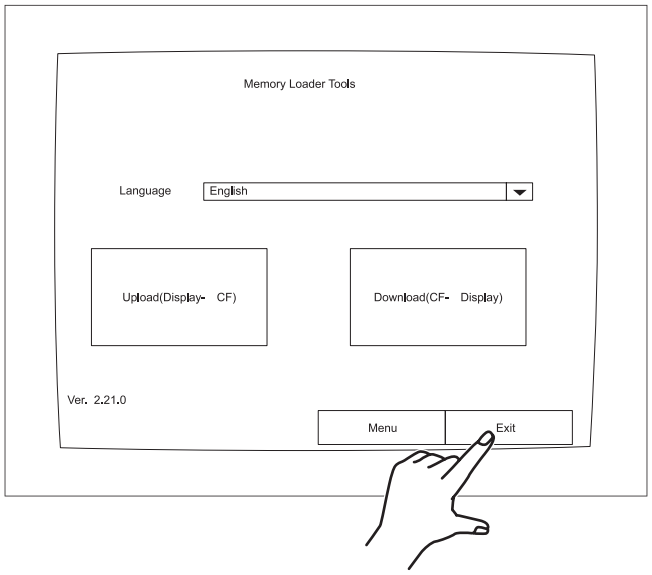

Reference Only

13. Press [Yes].
    Monitor re-starts.
    This is to complete re-writing of program.
    Turn the key switch OFF and take out the CF card.

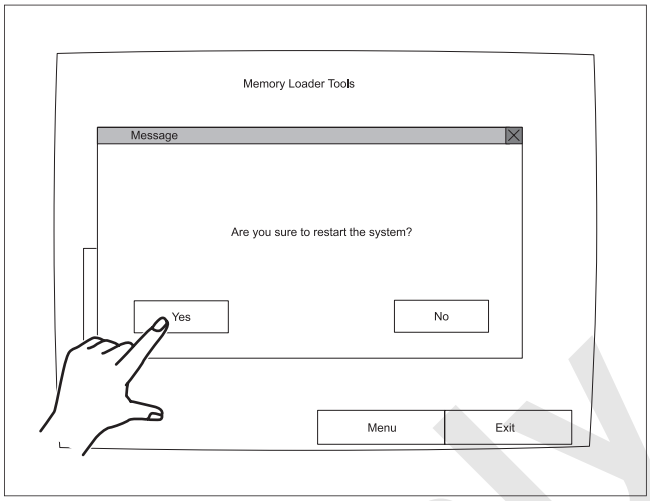

Reference Only

10.3 MAIN CONTROLLER

10.3.1 ARRANGEMENT OF MAIN CONTROLLER

1. Installation position (cab) of main controller 1

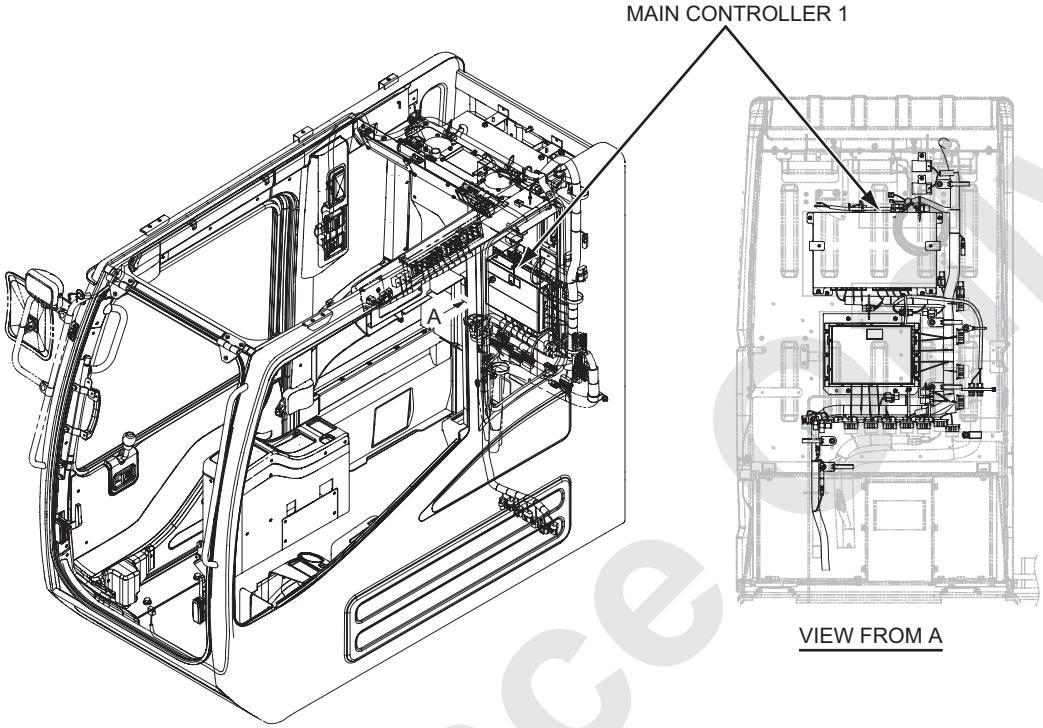

2. Installation position (left deck) of main controller 2

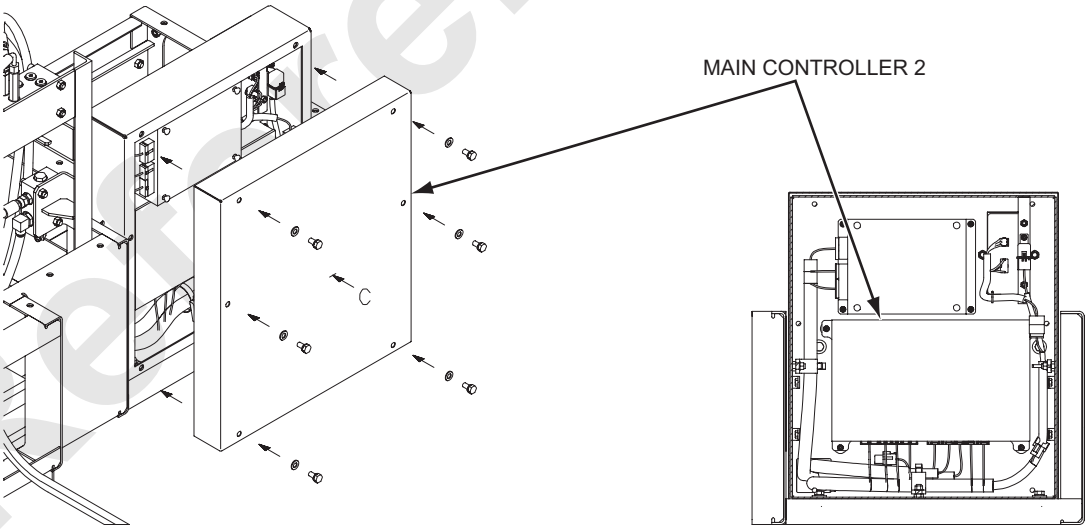

FRONT LEFT DECK INSIDE

VIEW FROM “C”

Reference only

10.3.2 COMPOSITION OF SYSTEM

1. System composition chart

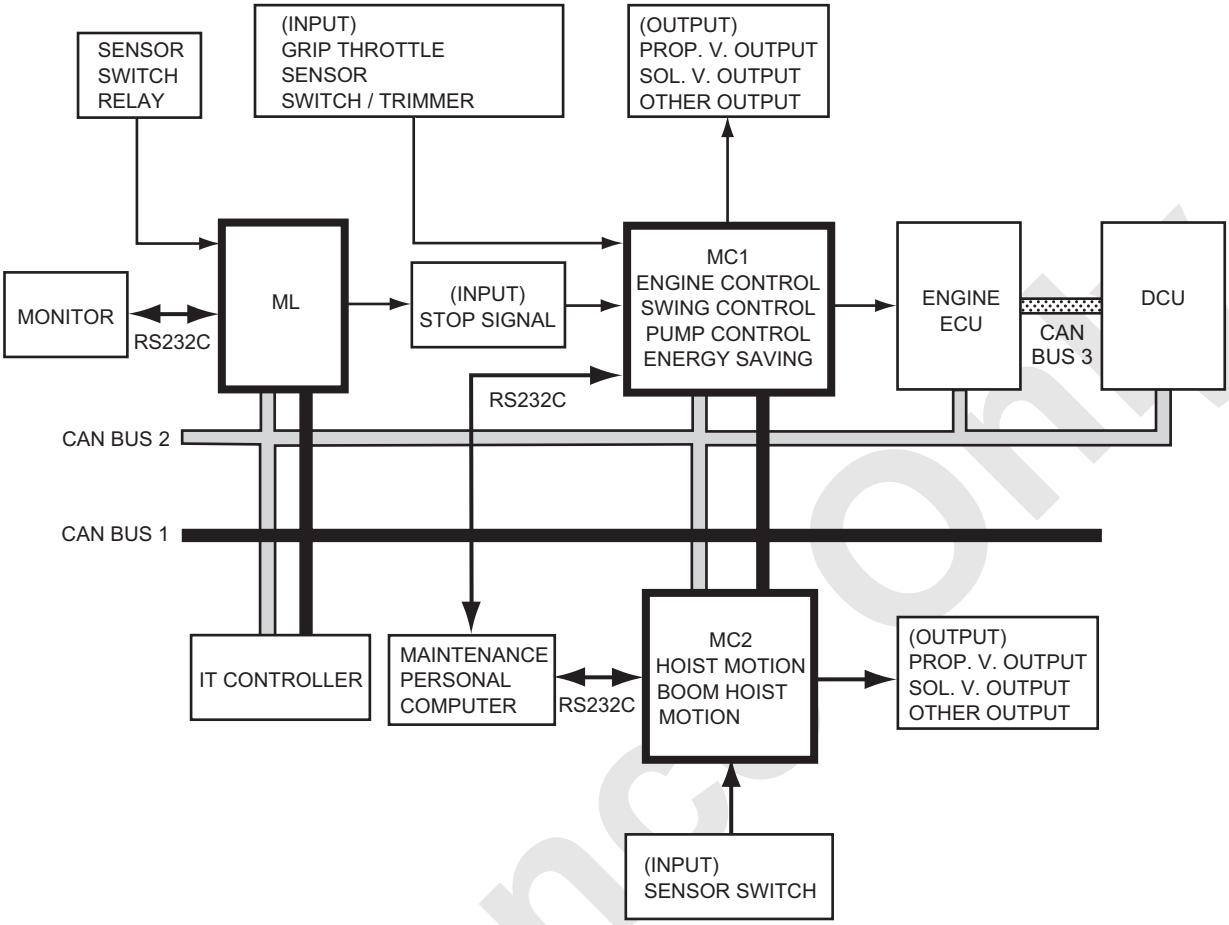

2. Output relation to controller

Items	Input/Output	Signal types	Outline
M/L (LMI)	Input/Output	Serial communication	The changes in lifting height during boom and jib hoisting, and number of part lines are transmitted from the M/L. The operating direction of the winch operation lever is transmitted to the M/L. The signals referring to automatic stop are input from the M/L in digital form.
Maintenance personal computer	Input/Output	Serial communication	This PC is used for down-loading of programs.
Grip throttle	Input	Analogue 0 to 5 V	The grip signals from the engine throttle are input.
Sensor	Input		The values from the pressure sensor, engine turn sensor, wind speed sensor, etc. are input.
Cab inside switch/ trimmer	Input		The values from the switches and trimmers in the cab are input.
Proportional valve	Output	24 V 100 to 700 mA	PWM output Constant current circuit (Max 1 A) Disconnection detection W/short-circuit protection
Solenoid valve	Output	24 V 1 A	Disconnection detection W/short-circuit protection

Reference Only

10.3.3 FUNCTION OF MAIN CONTROLLER

FUNCTION	CONTROL	
	MC1	MC2
1. Accelerator control	○	
2. Horse power control	○	
3. Winch motor speed control	○	○
4. Swing counterforce	○	
5. Swing speed control	○	
6. Swing limit control	○	
7. Winch control	○	○
8. Boost control		○
9. Boom stop control		○
10. Front, rear drum hoisting stop		○
11. Motor tilt angle control		○
12. Hook over hoist control		○
13. Drum rotation detect grip control (option)	○	
14. Front, boom pump control	○	
15. Height meter	○	
16. Lever interlock control	○	○
17. DPF regeneration control	○	○
18. G winch control	○	○
19. G engine control	○	
20. AIS control	○	
21. HYD. oil heat (option)	○	○

MC1 : MAIN CONTROLLER 1
MC2 : MAIN CONTROLLER 2

Adjustment function

(1) Model number setting
(2) Option setting
(3) Adjustment of grip throttle and foot throttle
(4) Engine speed adjustment
(5) Adjustment 5 Proportional solenoid valve output adjustment
(6) Adjusting of inclination meter
(7) Supply pump adjustment

Reference Only

1. Accelerator control

(1) Accelerator control
This provides command to ECU (engine control) based on input of grip throttle or foot throttle.
In case of both throttles are equipped, throttle having larger amount of command has a priority.

* To make foot throttle effective, option setting and adjustment is required.

In case of receiving command from remote control too, accelerator control by command to ECU shall be done.
In case the remote control is connected, input to remote control has the first priority to control.

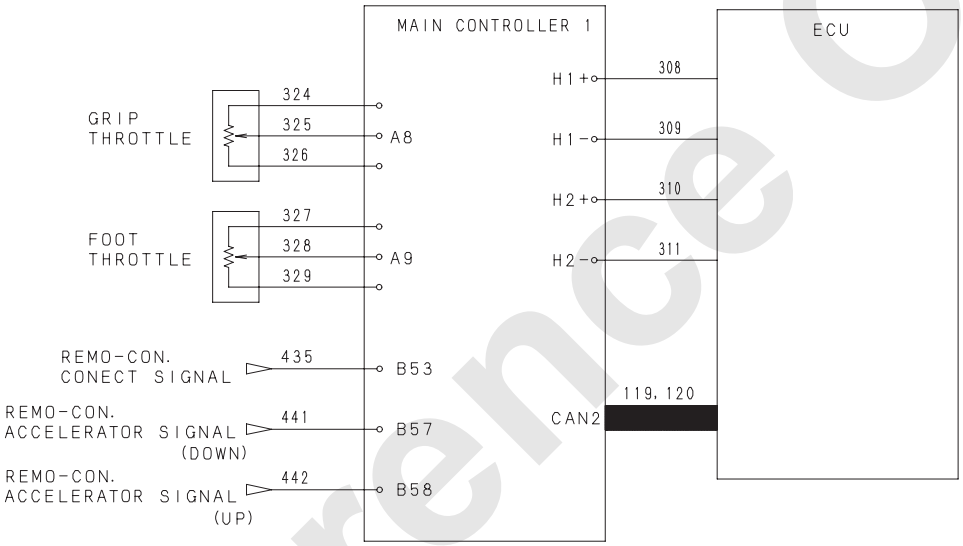

If the wire of accelerator control or foot control is broken, output voltage to ECU becomes 0 V.
In this case, by turning the aux. accelerator switch to ON, low speed and middle speed becomes operational.
(High speed is not possible)

Reference Only

(2) Power control
Battery relay is energized 1.5 seconds after the key switch is turned ON.
Battery relay is de-energized 4 seconds *after the key switch is turned OFF.
However in case of emergency solenoid being actuated, 90 seconds after.

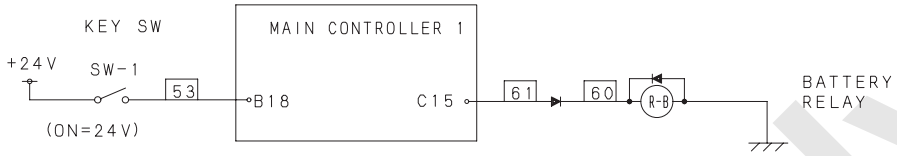

2. Horse power control

This is to control pump by calculating target speed from grip throttle to meet with engine actual speed.
The actual speed of pump is lower against target speed, the output current is larger.
However in case of low idling, even the difference is small, output current is large.
(to prevent engine stall)

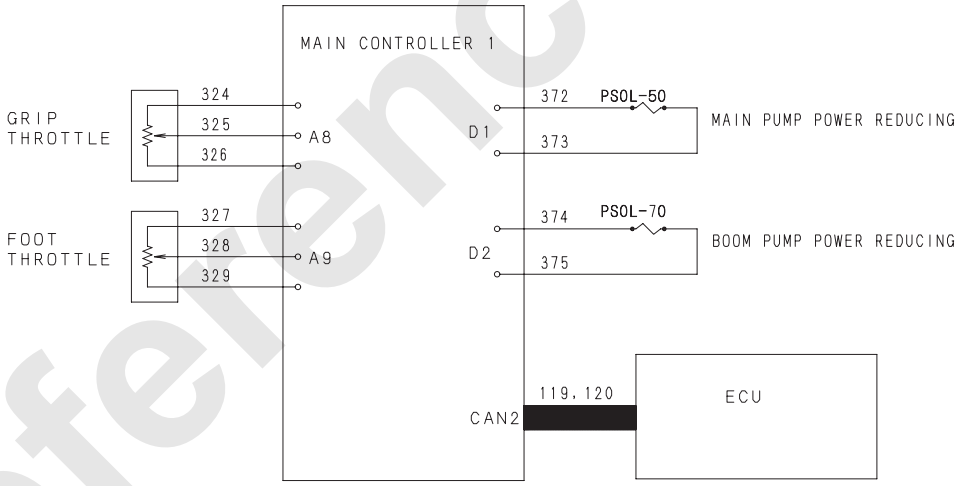

Reference Only

3. Winch motor speed control

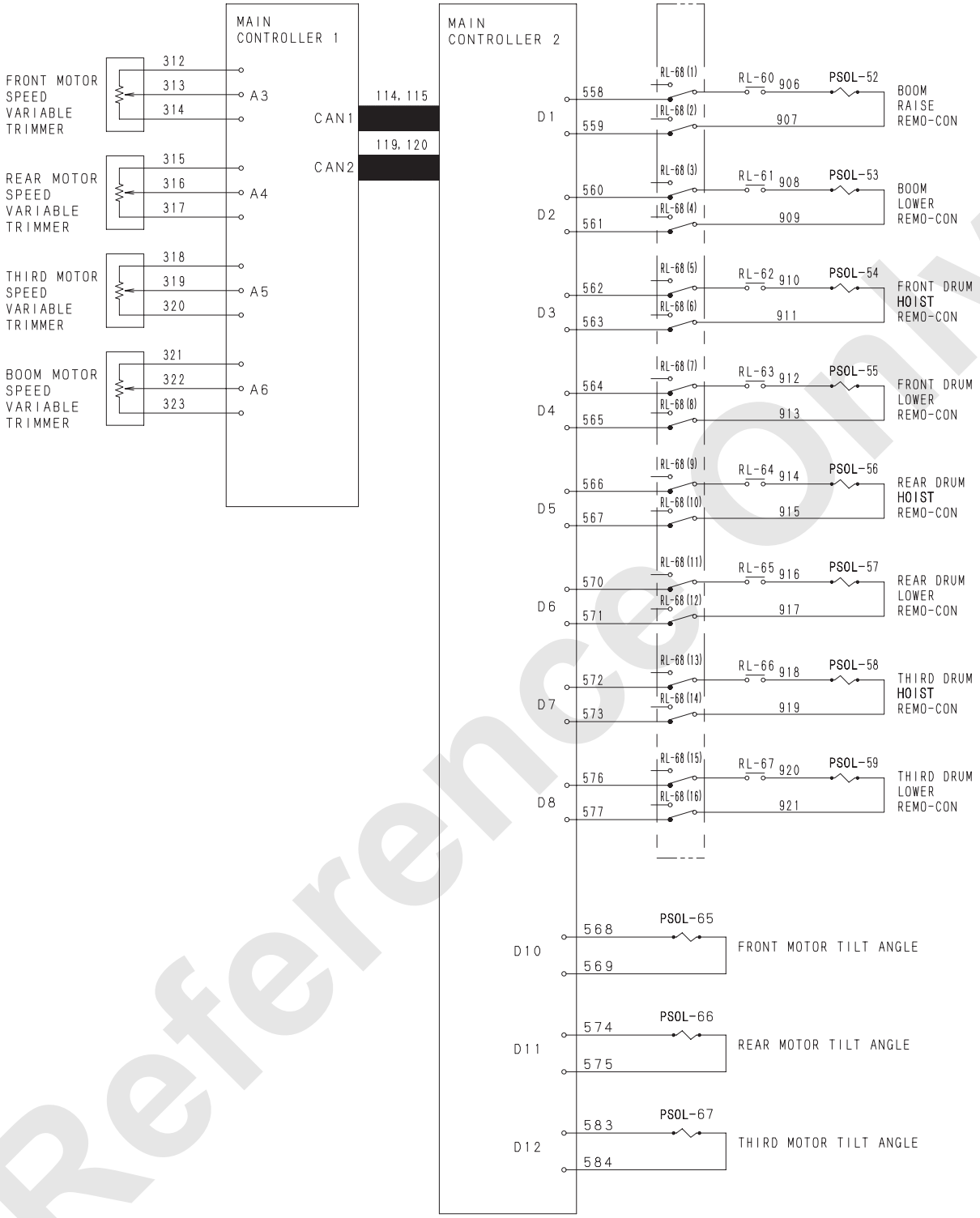

Reference Only

(1) Front, Rear, Third (option) drum speed variable Max. current of remo-con prop. valve and motor control prop. valve is controlled as shown above.

Priority order is as follows.

Remo-con prop. valve :
Front, rear, third (option) stop, Lever interlock > Front, rear speed reducing > Free fall > Trimmer control

Motor control prop. valve :
(Refer to "11. Motor tilt angle control" for detail)
Auto-stop > Free fall speed increase > Main pump inching speed > Trimmer control (during power lowering)

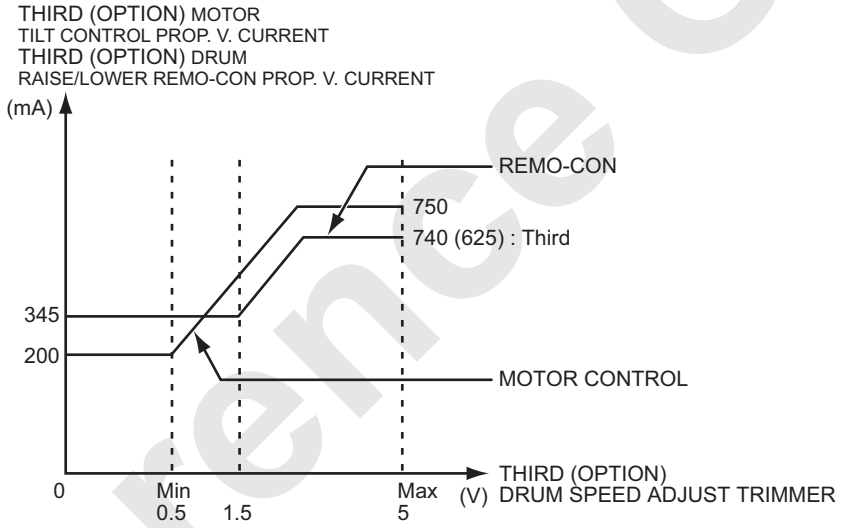

Reference Only

(2) Boom drum speed control

In case of low engine speed, when engine speed is intended to increase by characteristic (a) becomes closer to characteristic (b).

If the trimmer is set to maximum value, the prop. valve becomes full open and the main valve opening becomes maximum.

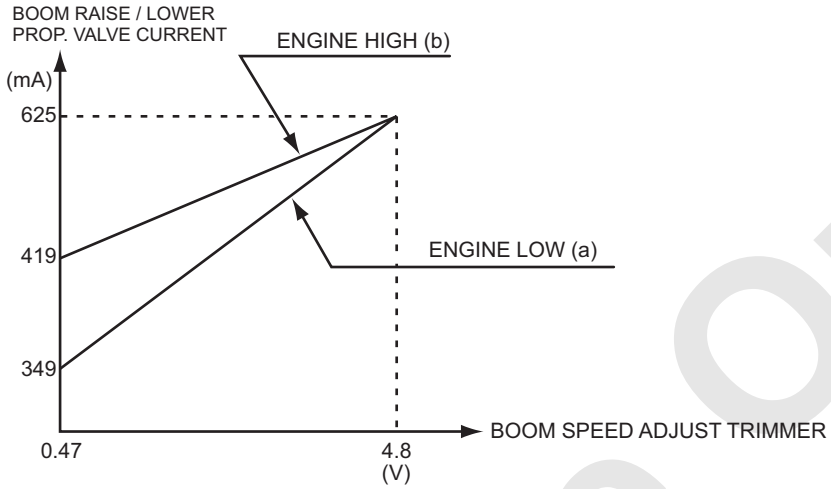

Reference Only

4. Swing counterforce

A reaction is applied to the lever depending on swing loads.

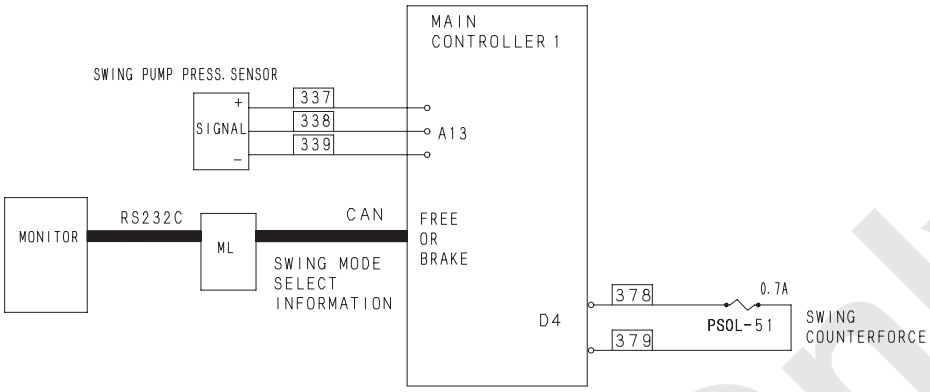

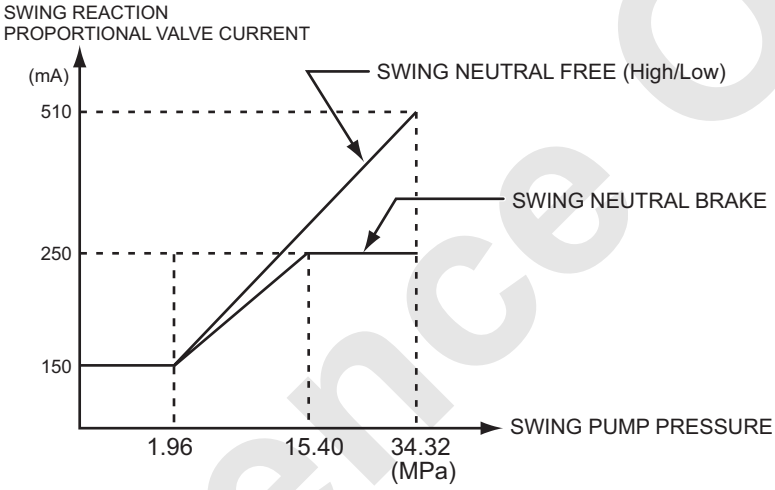

Reference Only

5. Swing speed control

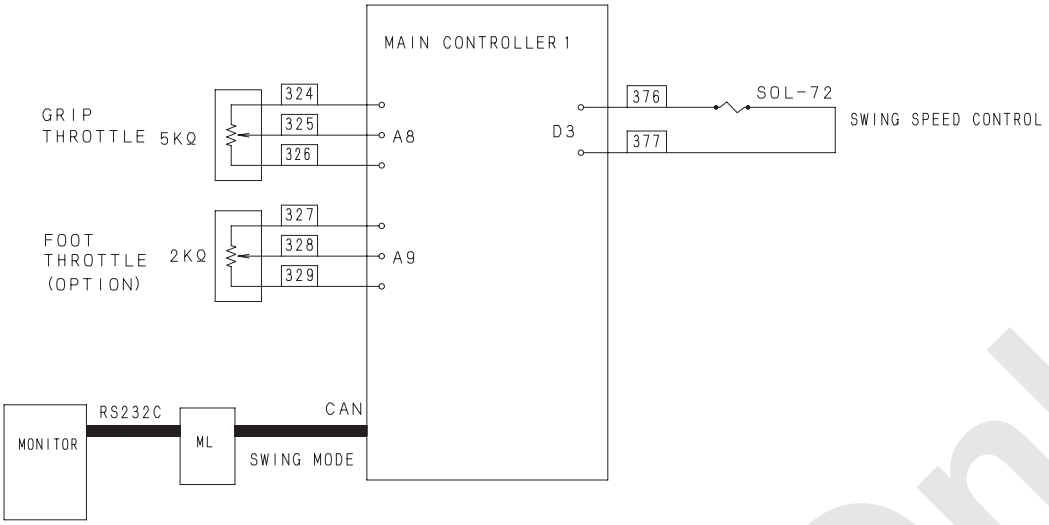

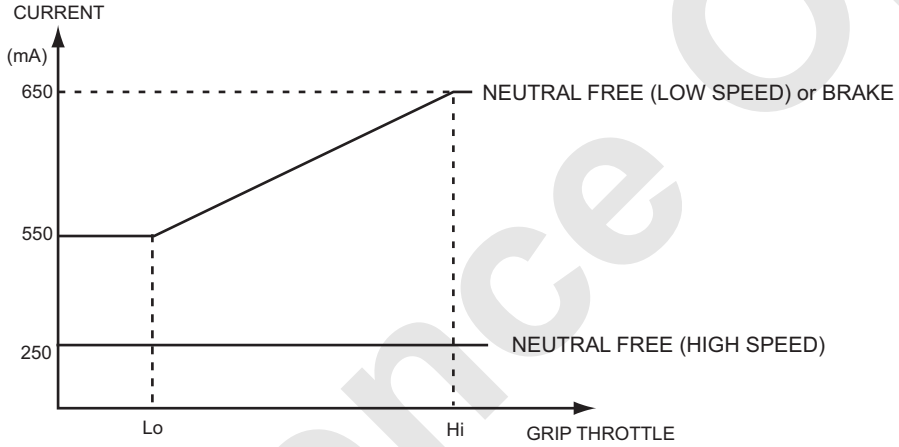

- When the swing control signal is OFF for 10 seconds, or swing limit function is selected, the current becomes maximum value. (700 mA)

Reference Only

6. Swing limit control

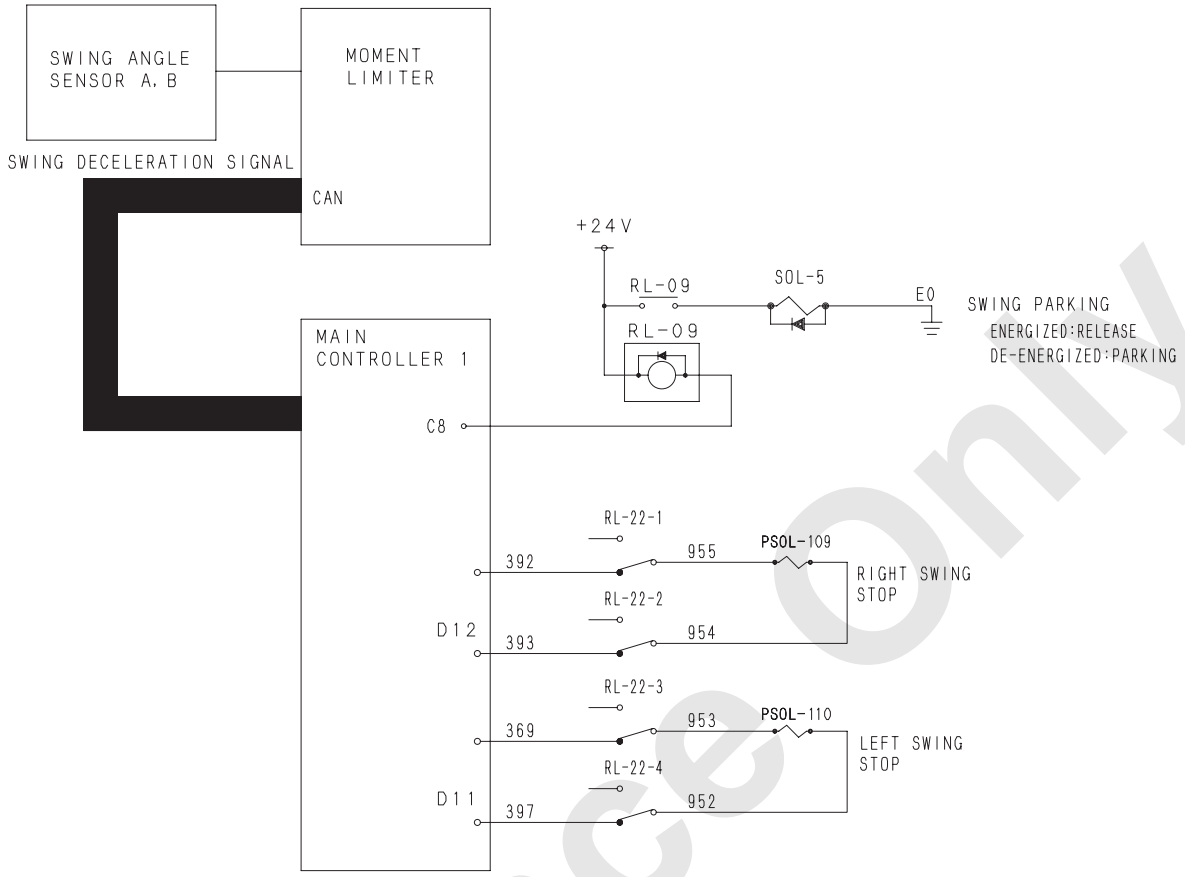

(1) Swing deceleration
Based on swing deceleration signal (R and L) input value (31 → 0), right swing / left swing stop prop. valve output current is controlled.

(2) Swing stop
5 seconds after the deceleration signal becomes “0”, swing parking output is issued.
Parking action is released when left control pressure is detected when stopped with right deceleration.
Parking action is released when right control pressure is detected when stopped with left deceleration.
Judging point of control pressure is more than 0.539 MPa.

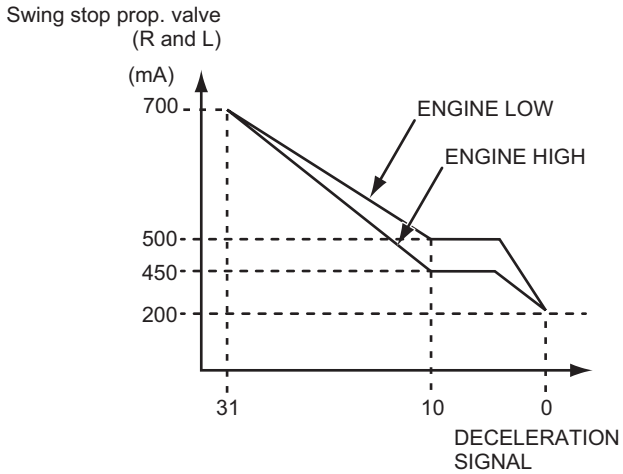

Reference Only

7. Winch control

(1) Control lever neutral mode selection
(2) Winch operation solenoid valve control

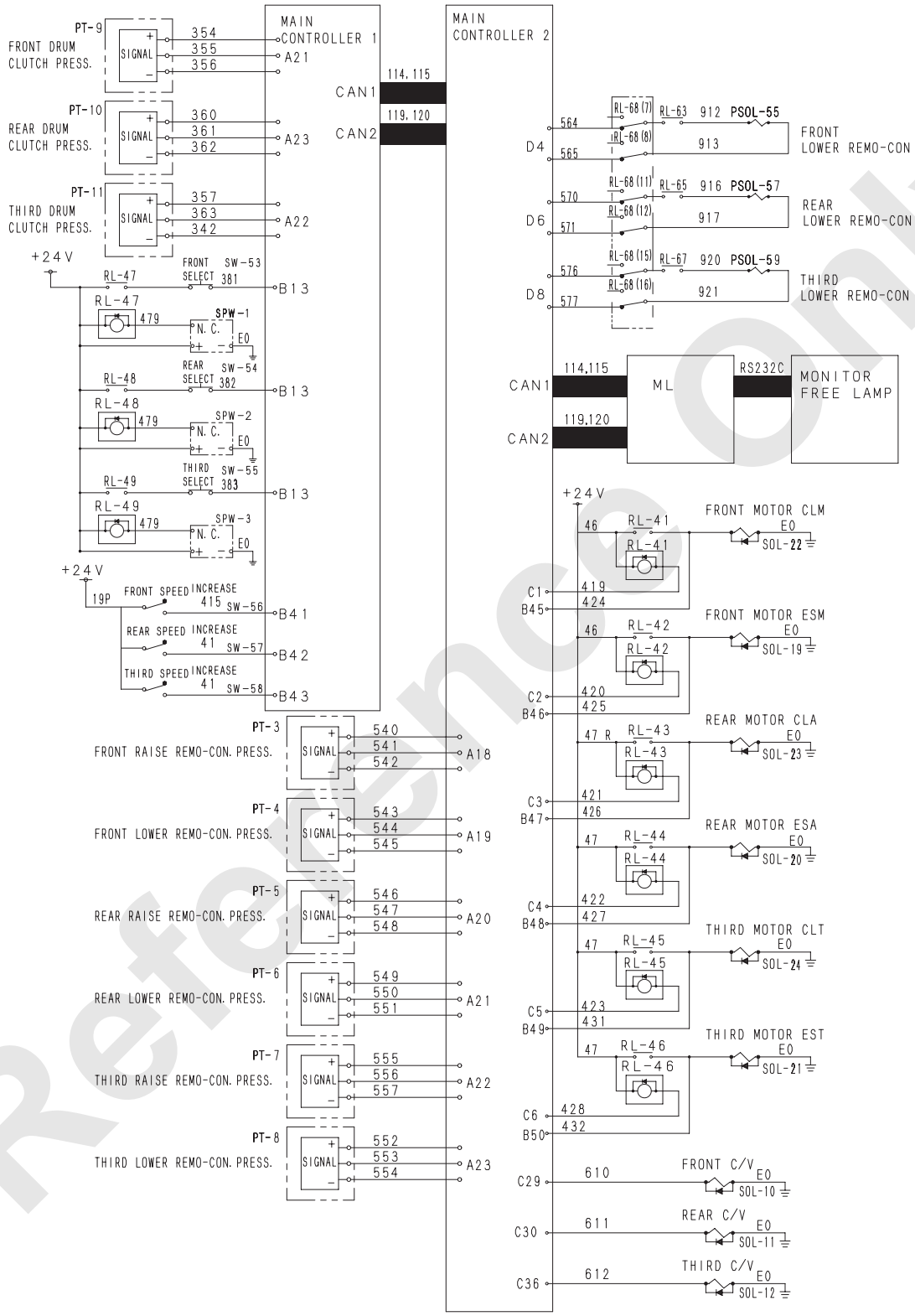

Reference Only

(A) When power is supplied
The machine always starts running in the neutral brake mode.

(B) Switching from the brake mode to the free fall mode.

Condition		Output
• The free fall lock switch is set released and function lock lever is in work position.	Free release “ON”	• Select the free mode. • Light up the free fall indicator lamp. (Monitor indication) • Release the main pump control.
• The foot brake is depressed (the pressure switch is set to the “ON” position). • The free selector switch is set to the “ON” position.	Each drum free fall signal “ON”	

(C) Change from free fall mode to brake mode
Depress the foot brake again, and set the free fall mode selector switch to the ON position.
Or, when the free fall permission signal is in the “OFF” status.

(D) Control of solenoid valve in free fall/brake mode
The front drum CLM (SOL-22) is controlled as shown in the table below.

Lever control	Mode	
	Neutral free	Neutral brake
Hoisting	×	×
Neutral	×	×
Lowering	○	×

○ : Energized ×: De-energized

- The ON/OFF status of the lever operation is judged by the value from the pressure sensor. (Lever operation is judged to be ON if the pressure is 0.343 MPa or more.
It is judged to be OFF if the control pressure is not more than 0.196 MPa or less.)
The rear drum CLA (SOL-23) and the third drum CLT (SOL-24) are controlled in a similar manner.
When the lever is at the neutral position while the free fall mode is selected, output from the front drum (rear drum and third drum) lower remote control proportional valve to be met according to the respective clutch pressure outputs.

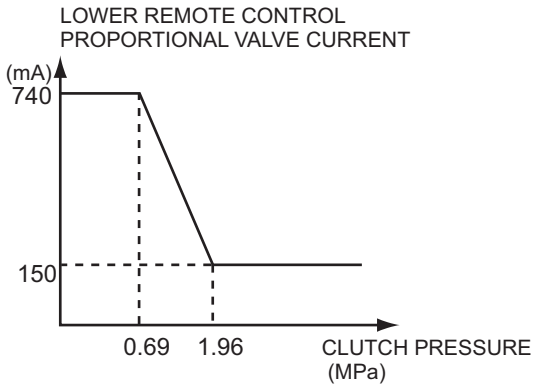

Reference Only

(E) Emergency solenoid valve control
For the front drum, when either of the conditions below is realized, ESM (SOL-19) is energized to prevent a drop of a lifted load.

1) The clutch pressure is reduced (under 3.73 Mpa) although the brake mode is selected.
2) The clutch pressure is reduced (under 3.73 Mpa) although the lever is operated during the free fall mode.
For the rear drum and the third drum, the ESA (SOL-20) and EST (SOL-21) are controlled respectively as same as front drum.

Note

Once the emergency solenoid valve is actuated, the current operation mode cannot be altered to the free fall mode unless power to the controller is shut down.
Even after the main power supply is shut down while the emergency solenoid valve is being actuated, power supply to the controller remains alive for 90 seconds and after the engine is stopped, in this period, the residual clutch pressure is removed.

Reference Only

(3) Free fall acceleration

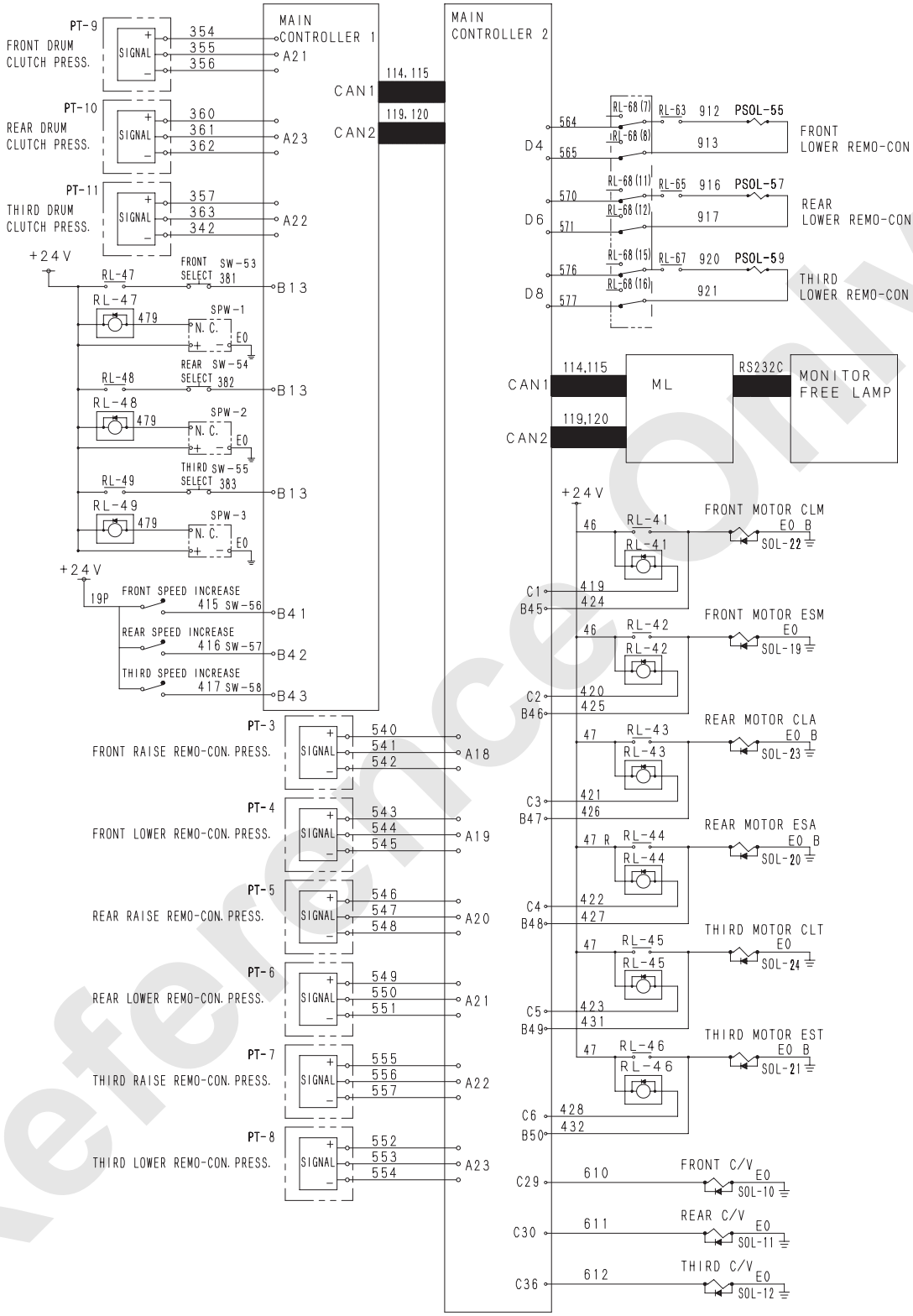

Reference Only

The falling speed can be increased by idling the motor during the free fall.
The speed is controlled as shown in the table below.

Conditions	Procedures
• Free fall mode is selected. • The control lever is at the neutral position. • The “FREE FALL SPEED INCREASE SWITCH” on the left upper of operation seat is ON. • The foot brake is not depressed. (Clutch ≤ pressure 1.96 MPa, when free fall mode)	• C/V free fall acceleration solenoid is energized. • Current of motor tilt angle proportional solenoid Model Gr. : Current (Front/Rear Confluence/Independent) FP, GG : 450 mA / 750 mA GD, GH, GK : 510 mA / 750 mA GN, JD : 535 mA / 750 mA HF : 527 mA / 750 mA Current (Third) All Models : 750
• One of the above conditions is not realized.	• C/V free fall acceleration solenoid is de-energized. • Other conditions are restored to those of the normal control.

The motor control proportional valve is controlled according to the depression of the foot pedal (clutch pressure).

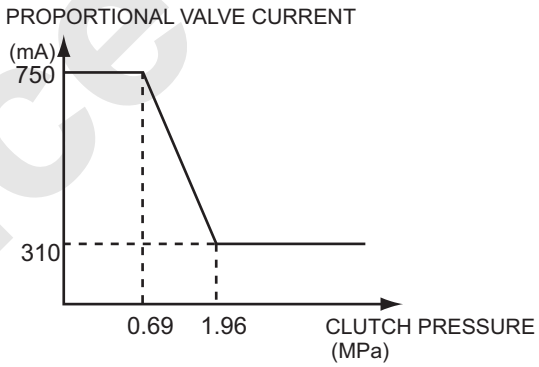

Reference Only

8. Boost control

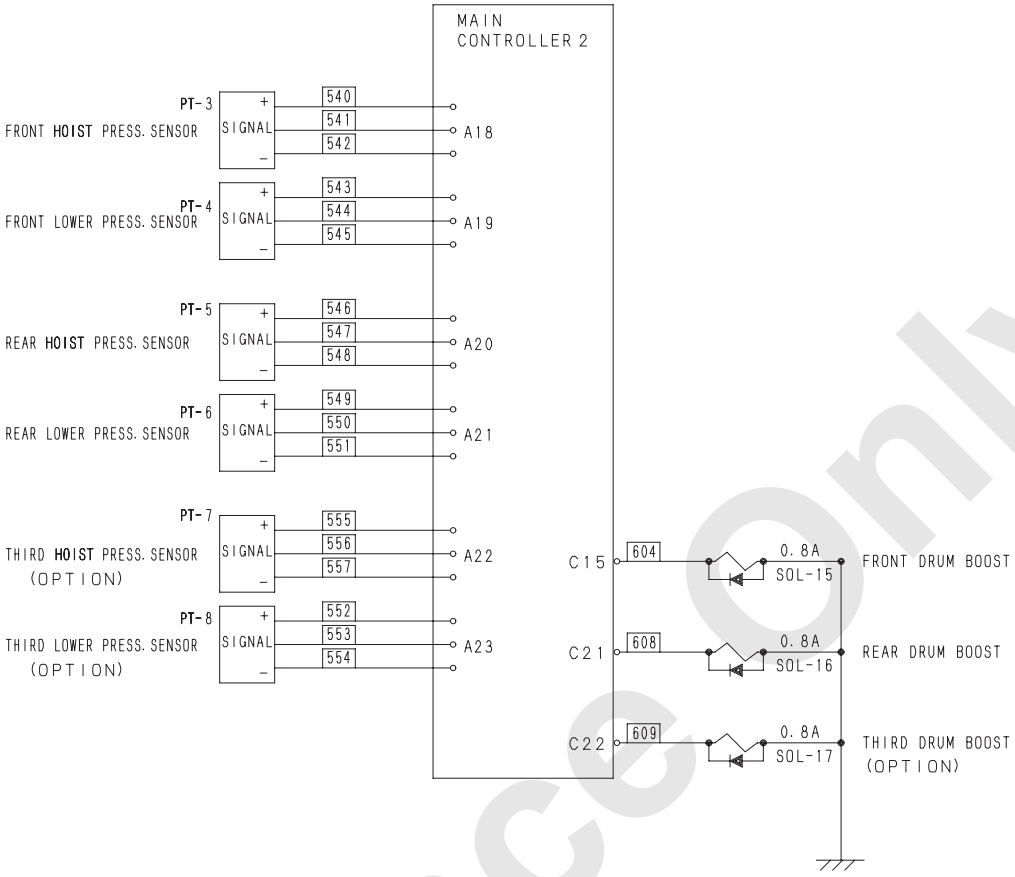

To prevent a momentary drop of a lifted load, apply a constant boost to the motor while the lever is in the neutral position.
The boost solenoid valves are controlled as shown in the table below.

Lever	Boost solenoid valve
Neutral	Energized.
Neutral → hoist, lower	Immediately de-energized.
Raise, lower → Neutral	Energized a second after the lever is returned to the neutral position. Remained de-energized if the lever is operated within a second after the lever is returned to the neutral position.

When the front drum or rear drum is stopped, the boost solenoid valve is controlled as shown in the table below.

Stop signal	Boost solenoid valve
Front drum hoist stop	Front drum boost solenoid is immediately de-energized.
Rear drum hoist stop	Rear drum boost solenoid is immediately de-energized.
Third drum hoist stop	Third drum boost solenoid is immediately de-energized.

Reference Only

9. Boom stop control

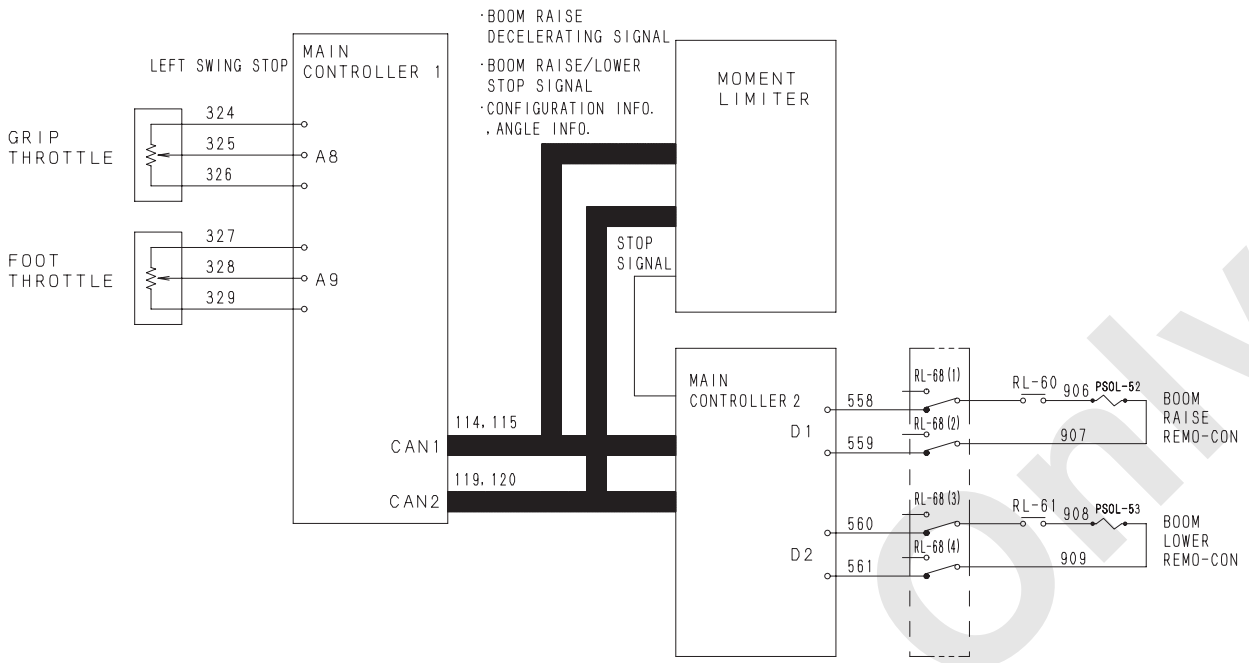

When boom raise deceleration signals are input (input when the boom reaches 10 degrees before the boom upper limit), the boom raise remote control proportional valve is controlled and the boom raising speed is decelerated according to the boom angle.

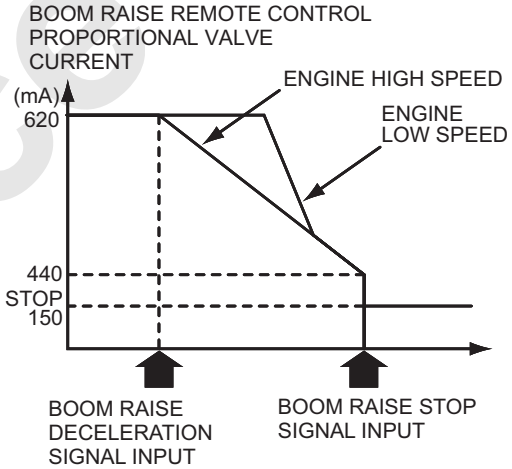

When the boom lowering stop signals are input, the current value at the boom lower proportional valve is minimized within 1.5 seconds, and the boom lowering stops gradually.

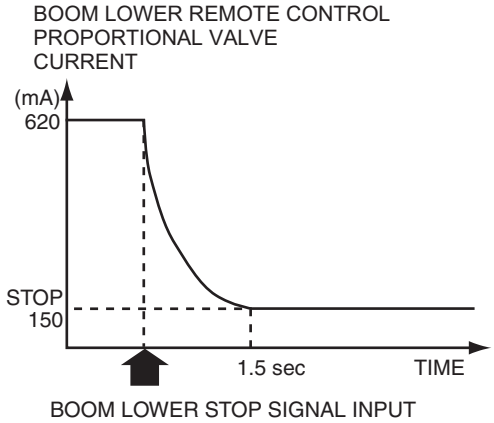

Reference Only

10. Front, rear drum hoisting stop

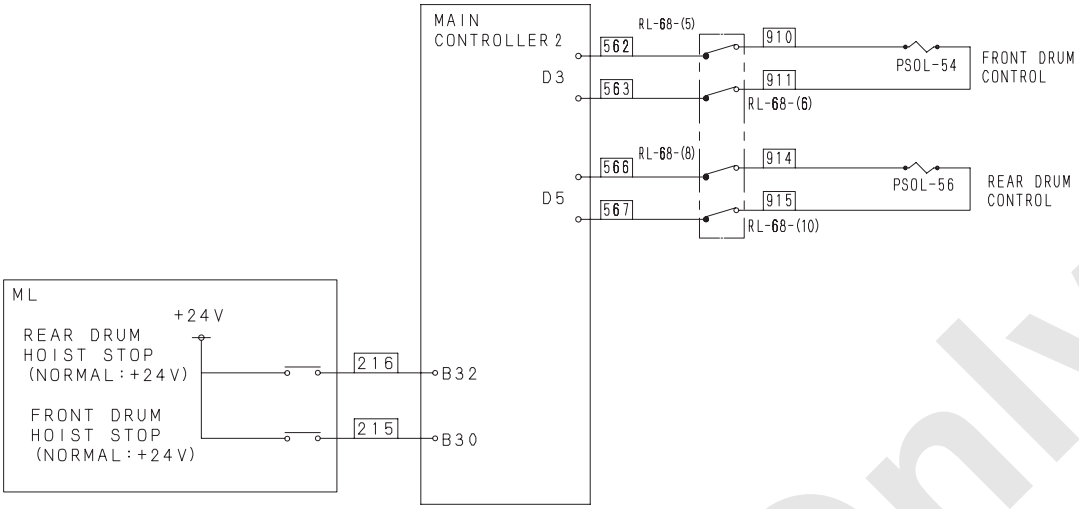

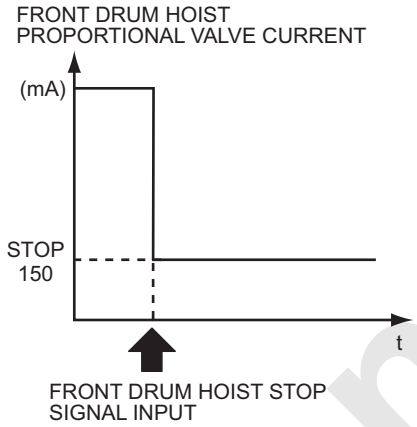

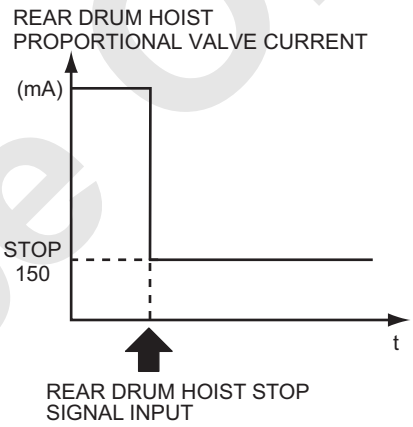

Reference Only

11. Motor tilt angle control

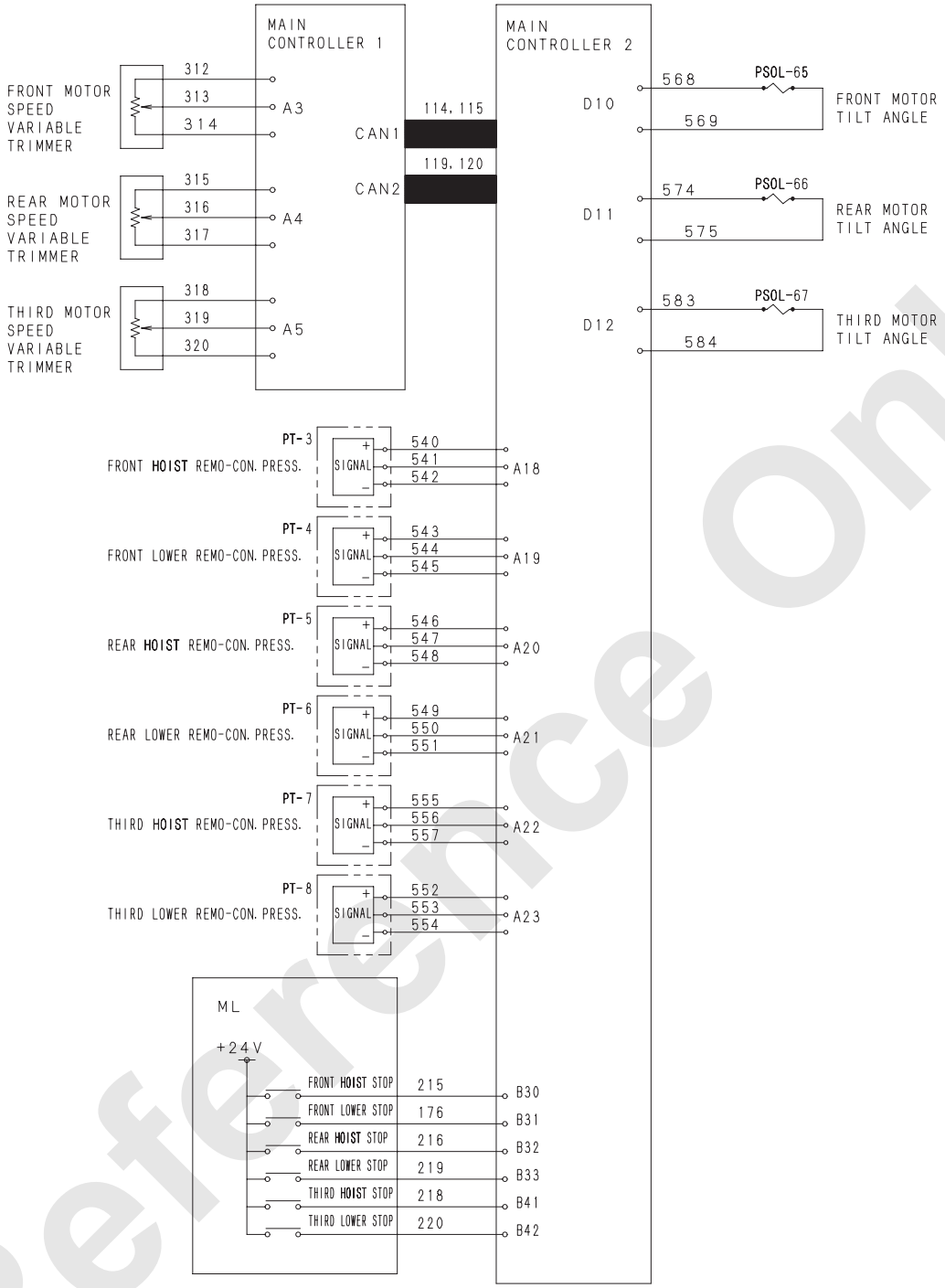

Reference Only

(1) During hoisting or lowering at brake mode or free mode, current of each motor tilt angle prop. valve is controlled as follows. (Trimmer control)

(A) Current of motor tilt angle prop. valve varies based on lever motion and speed variable trimmer position.

1) Front drum and rear drum (At confluence)

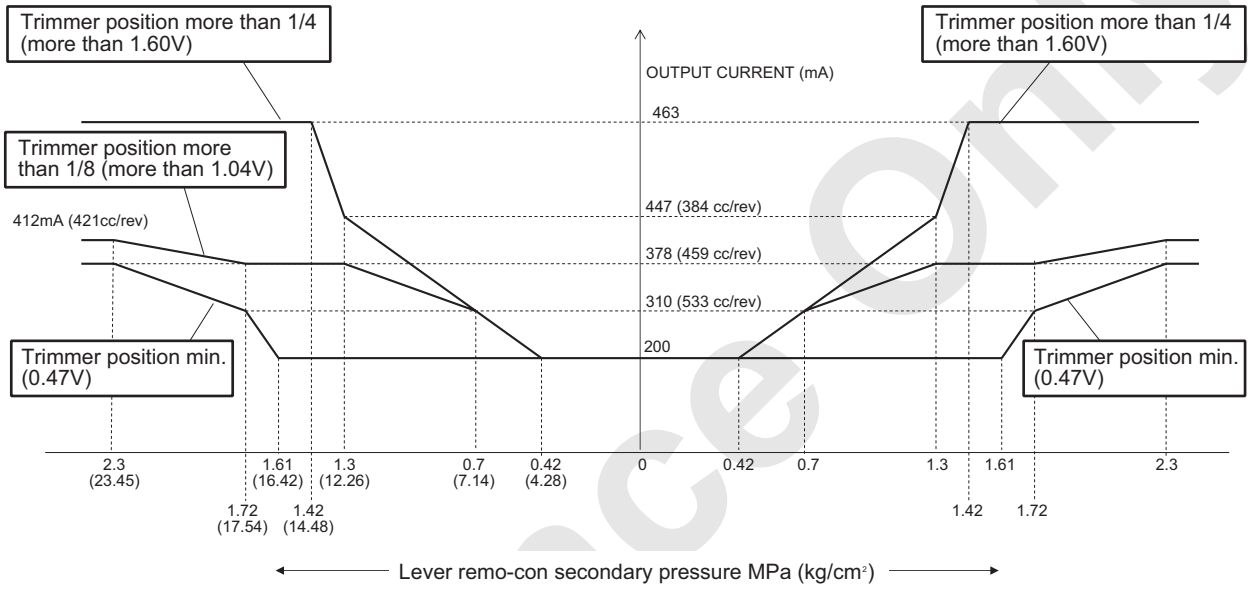

At confluence circuit, front, rear tilt angle prop. valve control

2) Front, rear and third drum (At independence)

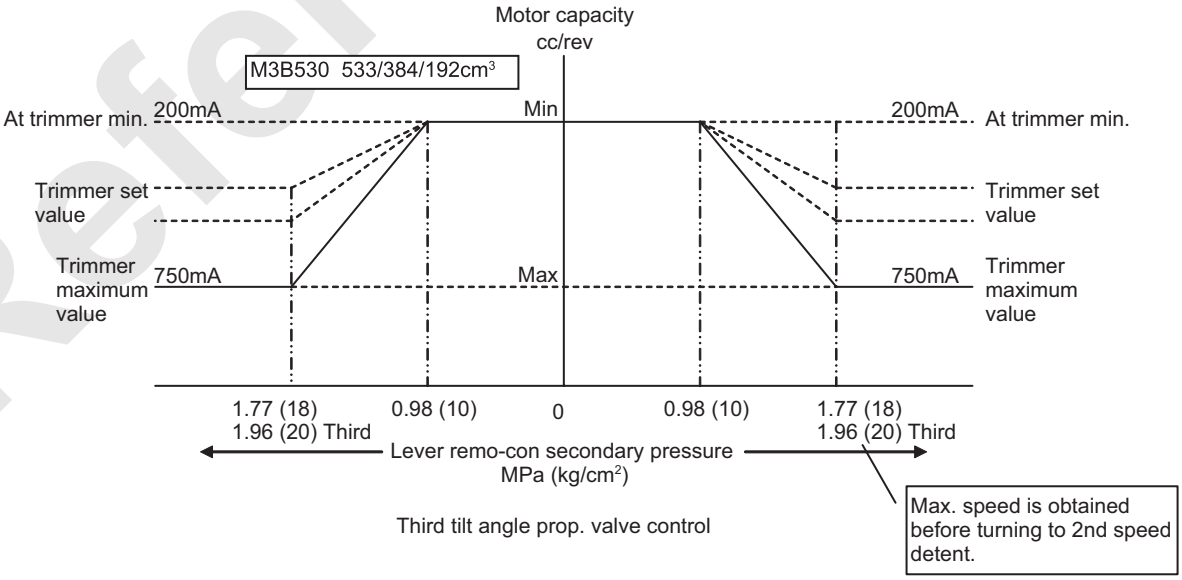

Third tilt angle prop. valve control

Reference Only

(B) Maximum current of motor tilt angle prop. valve is controlled by no load engine speed (Command quantity by grip).

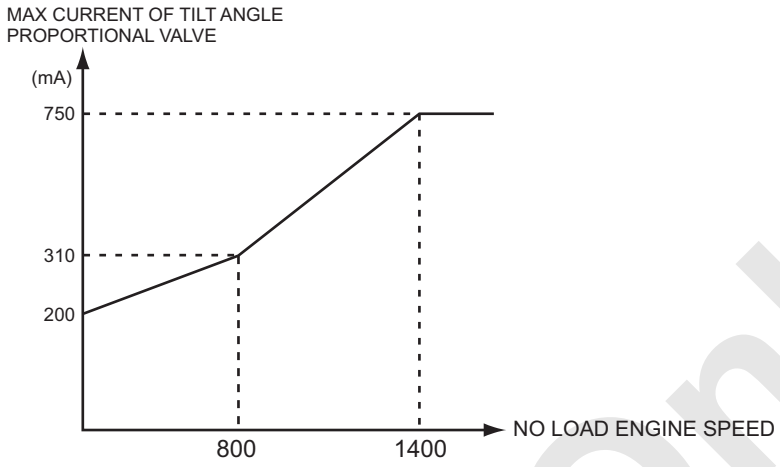

(2) When auto-stopped
In case of drum is in auto-stop condition, output current is to be fixed to 200 mA.
But if operated toward safe side (not auto-stop side), it shall return to the value by other control.

(3) Luffing mode speed control
In case luffing mode is selected by ML (by ML transmission) third motor high speed is cut off by output control of third motor tilt angle prop. valve. Prop valve current is cut off to make third tilt angle pressure lower than 2.11 MPa (3.37 V)

(4) Clamshell mode
In case work mode select is ON (= low speed is selected [Heavy load clam], front motor tilt angle and rear motor tilt angle are fixed to low. (prop valve current is fixed to 200 mA)
(In case of luffing specification, this is not done.)

(5) Priority order is as follows.
Auto stop (this section) > free speed increase > main pump inching speed > clamshell mode (this section) > trimmer control (this section) > luffing mode speed control (this section)

Between trimmer lever control value or engine speed control value, smaller value is selected as maximum value.

Reference Only

12. Hook over hoist control

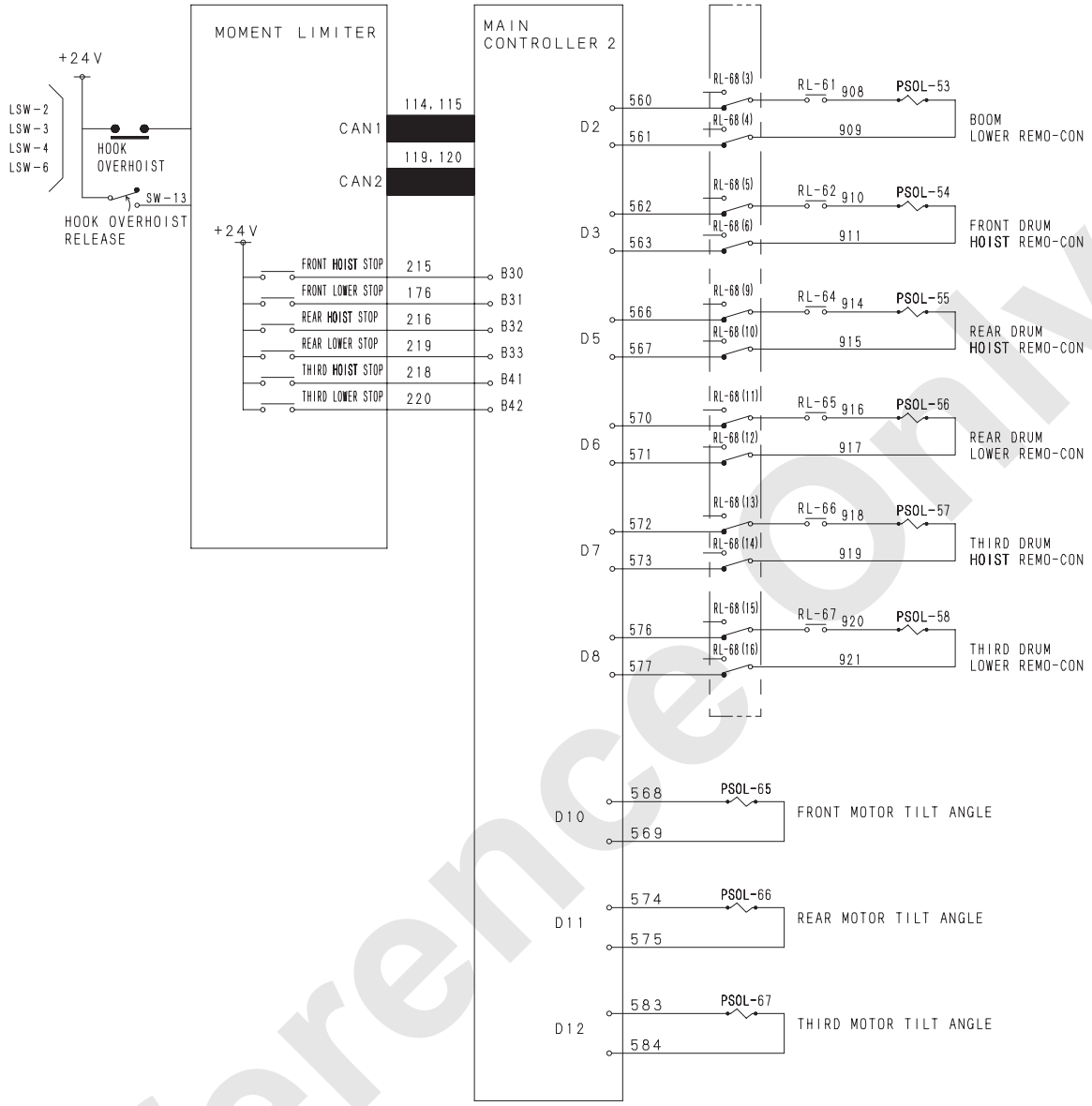

Reference Only

(1) Action at hook over hoist
Output of corresponding remo-con. valves shall be 150 mA when hook over hoist notice is received with CAN transmission from ML.
At the same time, stop signal from ML is input and stop action is done.

STOP CORRESPONDING REMO-CON. PROP. VALVE

Front hoist remo-con. prop. valve
Rear hoist remo-con. prop. valve *But in case of tower configuration, stop action is not executed.
Rear lower remo-con. prop. valve *But in case of tower configuration only, stop action is executed.
Boom raise lower remo-con. prop. valve
Third hoist remo-con. prop. valve *But in case of luffing configuration, stop action is not executed.
Third lower remo-con. prop. valve *But in case of luffing configuration only, stop action is executed.

(2) Action at hook over hoist released
When hook over hoist is released at hook over hoist occurs, the following action is made.

Front, rear and third (jib) hoist remo-con. prop. valve command current are set to inching speed level. (375 mA)
If each lever is in operation, each tilt angle prop. valve output is fixed to Low. (310 mA)

Reference Only

13. Drum rotation detect grip control (option)

Control the grip solenoid based on drum rotation sensor input.

Grip solenoid output becomes OFF when the drum speed exceeds the specified level.
Specified speed. = drum speed :
about 61.5 min^{-1} = more than 4 pulses at 50 msec.
Therefore there is no output from the total controller.

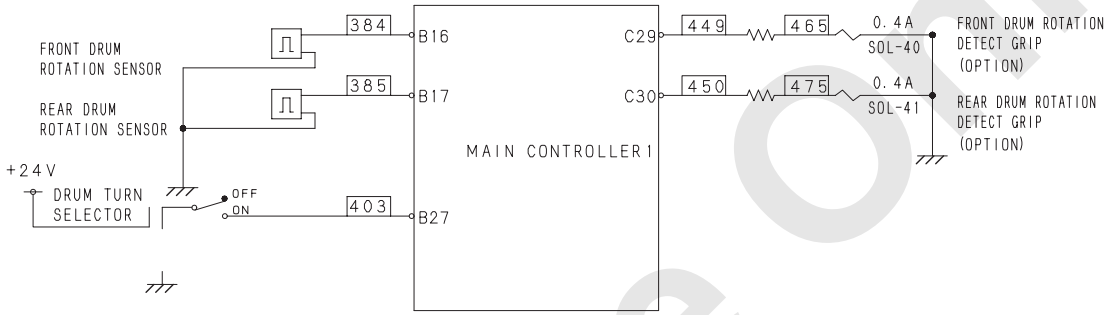

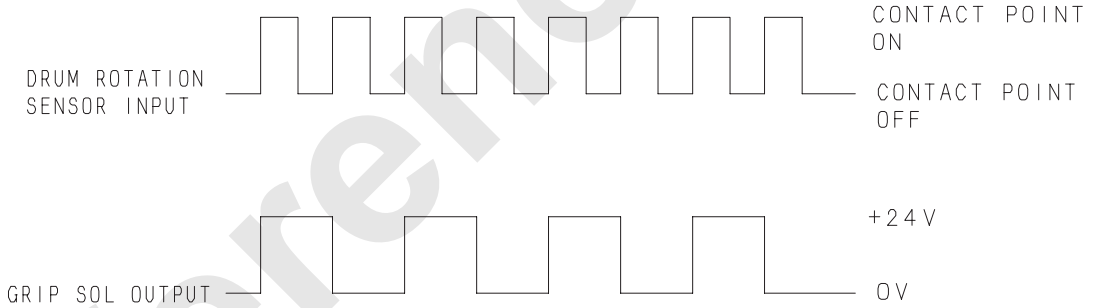

Reference Only

14. Front, boom pump control

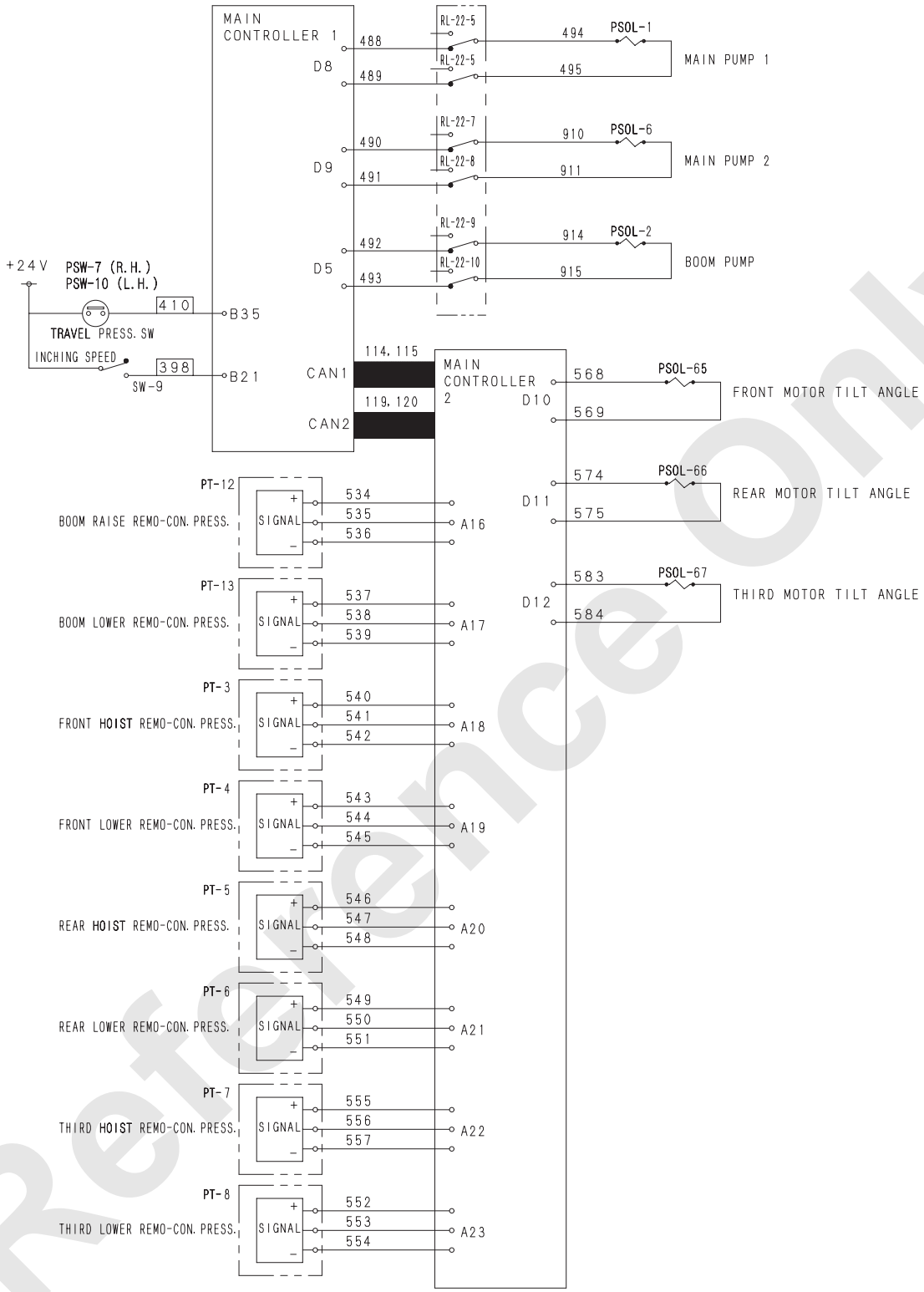

Reference Only

(1) Inching control
This is to control the tilt angle proportional (prop.) valve of each pump according to lever motion.

Pump	Prop. valve	Lever motion				
		Front	Rear	Boom	Travel L	Travel R
Main front	Main pump tilt angle 1	Release	Release	Release	Release	Release
Main rear						

- The corresponding prop. valve is released based on lever motion as shown above.
  Release : 150 mA
  Lever in neutral : 700 mA
- For model with main pump 1, 2 prop valve 1 and 2 are released based on front and rear control motion only at independence mode.
  At confluence mode, they are released at the same time.
- Prop. valve released at third drum is lever controlled.
  Main pump tilt angle prop. valve is released.

(2) Control at inching switch is ON.
When the inching switch is ON, output becomes 700 mA regardless of lever control.
At this time, motor tilt angle prop. valve is fixed to low. (310 mA)

(3) 10000E-1 (CEN conforming) control
(Not required for North American models.)
When ML is released and switch input is ON, same control as inching switch ON control (2) above is applied.

Reference Only

15. Height meter

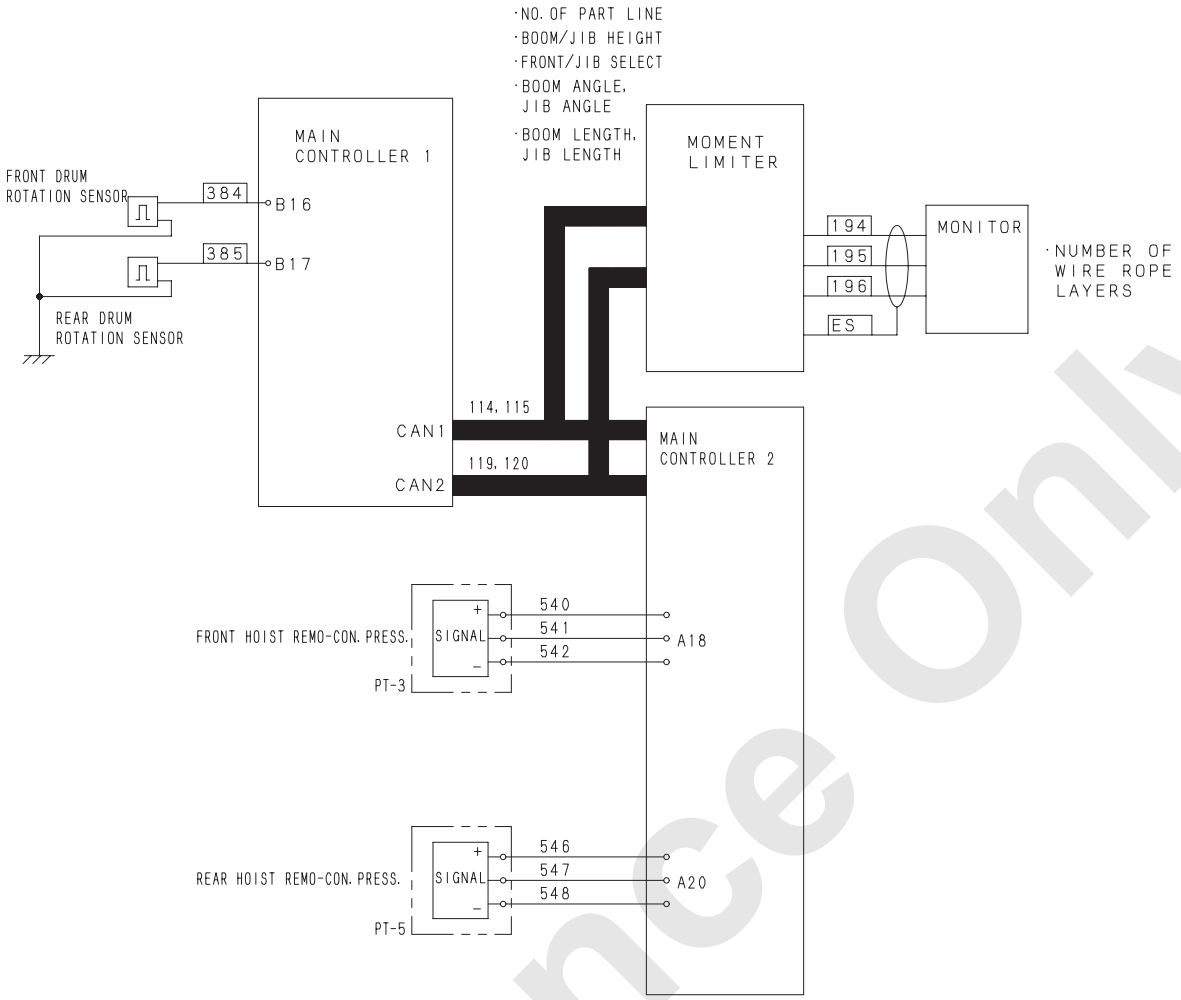

Reference Only

(1) Drum rotation amount is detected by pulse counting with drum rotation sensor.
(2) When hoist pressure sensor input exists, variation is counted on hoisting side, and on the other case, variation is counted as ⊕ or ⊖ on lowering side.
(3) The number of wire rope layer adjusted in the main monitor is as a standard layer, calculate the layer during rotation.
(4) From the factor of each layer and pulse number, rope payout amount is calculated.
(5) The height is calculated by winding length divided by number of part line.
(6) With moment limiter, boom point height data is received (jib point height in case of tower). Difference between height of zero reset time and the present height is calculated and the boom or jib height is calculated.
(7) Distance variation of hook and boom point (jib point) is calculated by angle variation of boom (jib).
(8) Actual height variation is calculated by adding (5) to (7) and is indicated on main monitor.

- To make this control effective, option setting is required.

Reference Only

16. Lever interlock control

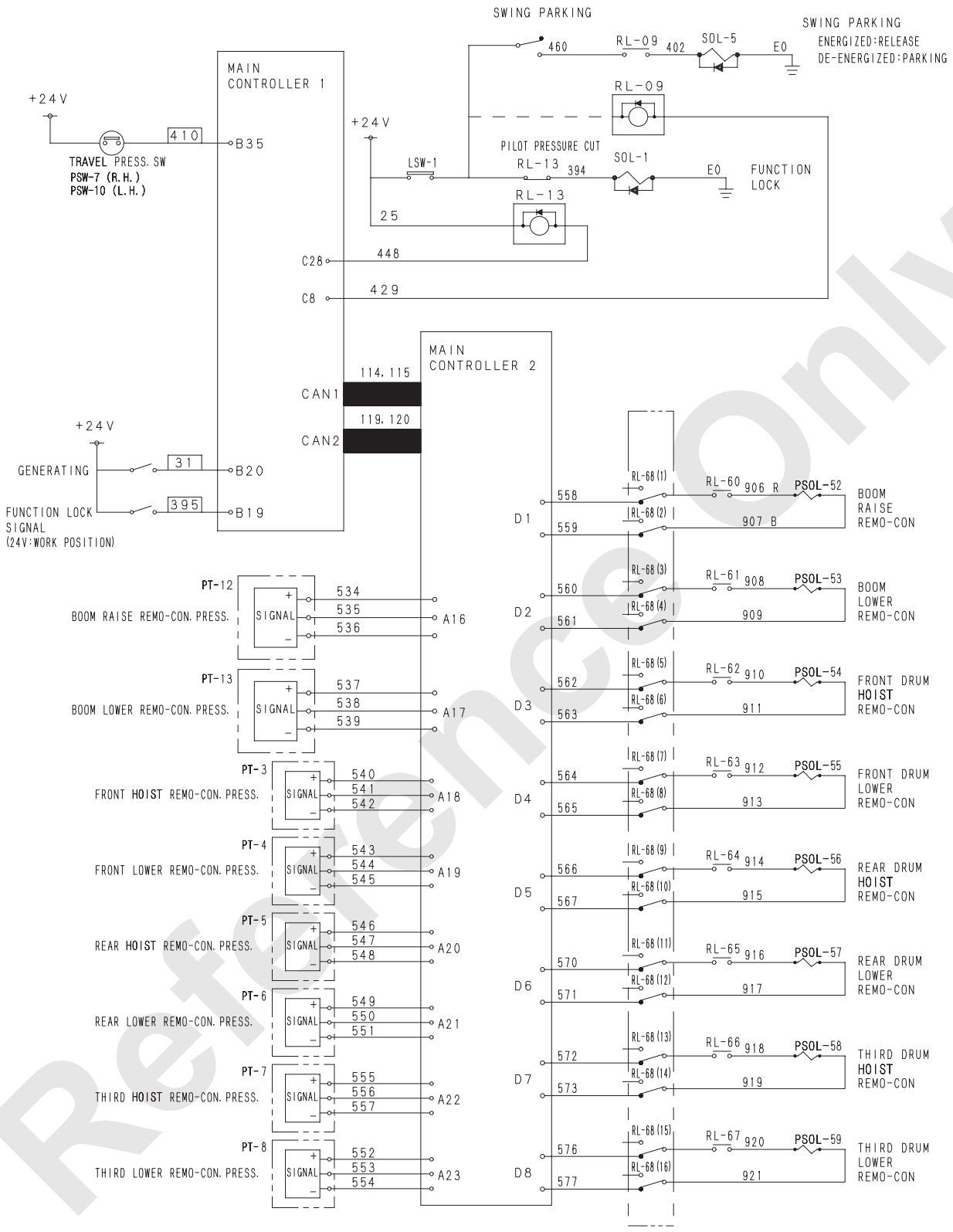

Reference Only

This is to prevent drum unexpected rotation at engine start when the lever is in operating position and the function lock lever is in work position.

(1) Before engine start
Each prop. valve current is minimum. (150 mA)
Pilot cut relay RL-13 is to be output. (pilot cut condition)
Swing parking relay RL-09 is to be output. (Swing parking condition)

(2) After engine started
After generation signal is input, the following actions take place.

(A) In case the function lock lever signal is OFF

1) When travel interlock option is equipped :
Pilot cut relay output becomes ON.
When travel interlock option is not equipped :
Pilot cut relay output is not issued.
2) Swing parking relay output becomes ON.
3) Output to each proportional valves are minimum.

(B) In case the function lock lever signal is work position (+24 V)

1) Output of pilot cut relay becomes OFF.
If travel control is detected 1 second after pilot cut relay OFF, pilot cut relay becomes ON again. (only when travel interlock option is equipped.)
2) Swing parking relay output becomes OFF.
3) If 3 seconds is elapsed after pilot cut relay OFF, judge if the pressure is existing on each remo-con prop. valve and all hoist and lower motion levers are in neutral, both hoist and lower output becomes minimum value of which used in other control.
Either one of operating motion is detected, all prop. valves output stay minimum as is.

Control stop condition by lever interlock function is to be transmitted to the monitor.

Reference Only

17. DPF regeneration control

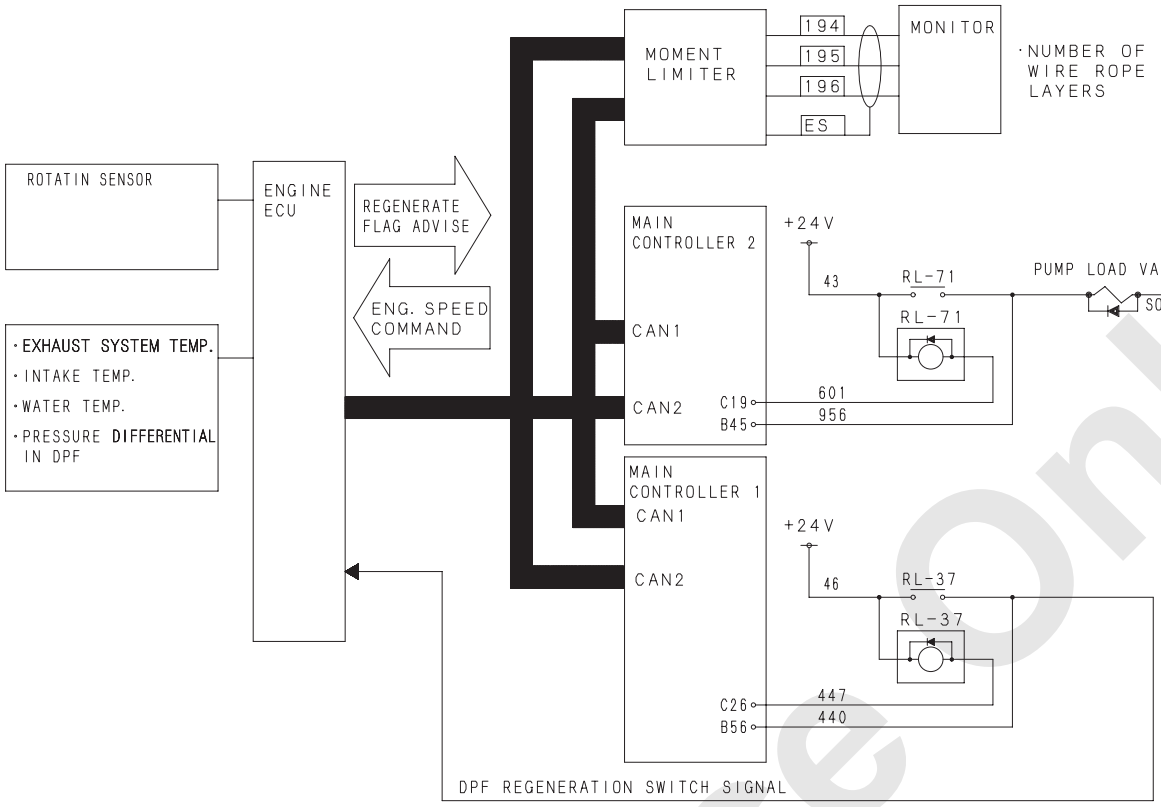

Regeneration starts when more than certain amount of soot is accumulated in DPF (Diesel Particulate Filter).

Counting of soot accumulated volume and regeneration start timing etc are all done by engine ECU.
However load valve control and engine speed control to raise exhaust system temperature in order to prevent regeneration starting during crane operation are done by crane side controller.

Reference Only

18. G winch control

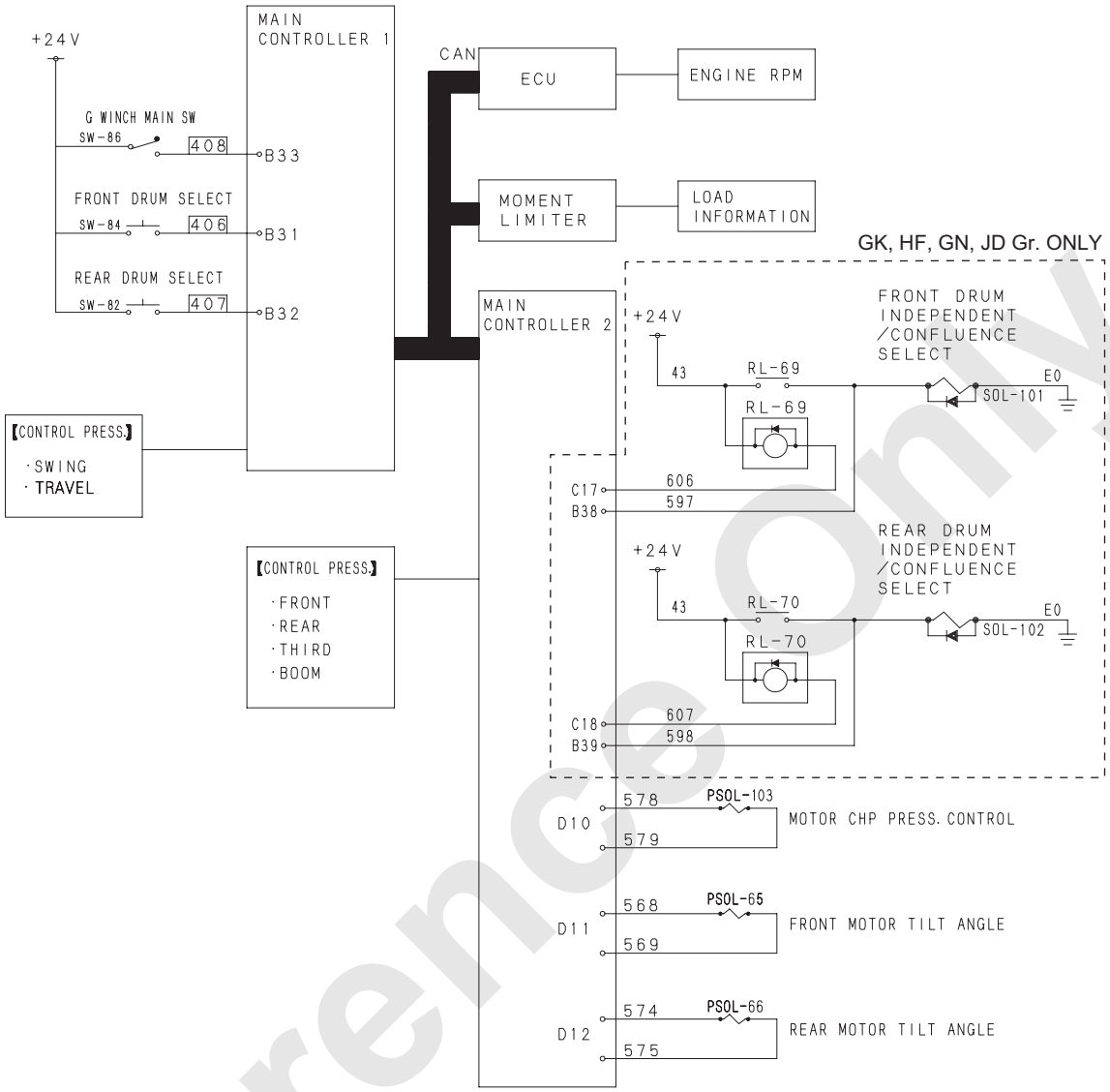

Reference Only

(1) G winch mode selecting
This is to make individual select switch, which is set individually for front/rear based on input of G winch select switch effective.
When individual switch is input, G winch condition is selected based on the conditions shown in the table.

Mode	Input condition				
	G winch			Lever condition	Engine speed
	Main	(Fr)	(Re)		
Normal mode	OFF	–	–	Neutral	–
G winch main mode	ON	–	–	Neutral	Idle ±5 %
G winch (Fr) (Re) mode	ON	ON (Ind.)	ON (Ind.)	Neutral	1,000 min^{-1} or lower

* Engine speed upper limit value is a value with G engine function OFF.
At G engine function is ON, upper limit 900 min^{-1}.

(2) G winch individual mode
When individual mode is selected either front or rear drum, the following action occur.

(A) Hydraulic circuit is changed internally to confluence mode.
In case of independence mode is selected, monitor indication only becomes independence condition.
Mid detent is also ineffective.
(B) Engine speed is raised to upper limit value.
If G engine OFF, it becomes 1,000 min^{-1}.
At G engine, it becomes upper limit 900 min^{-1}.
(C) Motor tilt angle control is changed to that of individual mode.
(D) Motor CHP prop. valve is changed to the one same as individual mode.

At luffing configuration, rear individual mode becomes ineffective.

After either front or rear becomes independence, G winch shall be released by one lever control (neutral → operation → neutral)
In case G winch function is required again, the individual switch is input.
After switched to individual mode and individual switch is pressed again, function is cancelled.

The load limit is to be determined with the displayed load in the monitor, selecting the G winch mode after the selection of the hook which is to be used.

Reference Only

19. G engine control

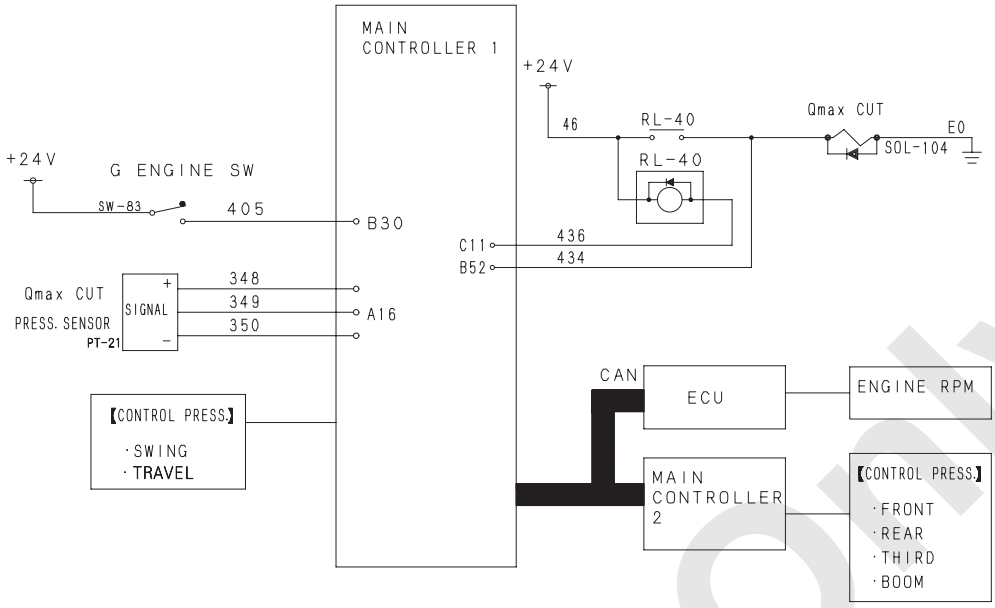

(1) G engine function select switch
After inputting into select switch, check the each levers location and if they are all in neutral, Q max cut solenoid is energized.

Mode	Input		Output	
	G engine function select	Lever condition	Q max cut SOL	Engine speed control
G engine	ON	Neutral	ON	1,725 min^{-1}
Normal	OFF	Neutral	OFF	2,100 min^{-1}

* At G engine mode, engine speed upper limit is changed as shown in the table.
* Q max cut solenoid becomes de-energized and then Q max cut condition is created.
(When energized, pump flow max. value is raised.)

(2) Fail safe
To prevent pump failure, engine speed and Q max cut pressure are always monitored and the following actions are taken at abnormal.

Mode	Abnormal judged value			Action at abnormal	
	Q max cut pressure	Q max cut SOL FB value	Engine speed control	Q max cut SOL	Engine speed control
G engine	3 MPa or more	OFF	1,800 min^{-1} or more	OFF output * at speed abnormal	1,725 min^{-1}
Normal	Less than 3 MPa	ON	No judgement		

Reference Only

20. AIS control

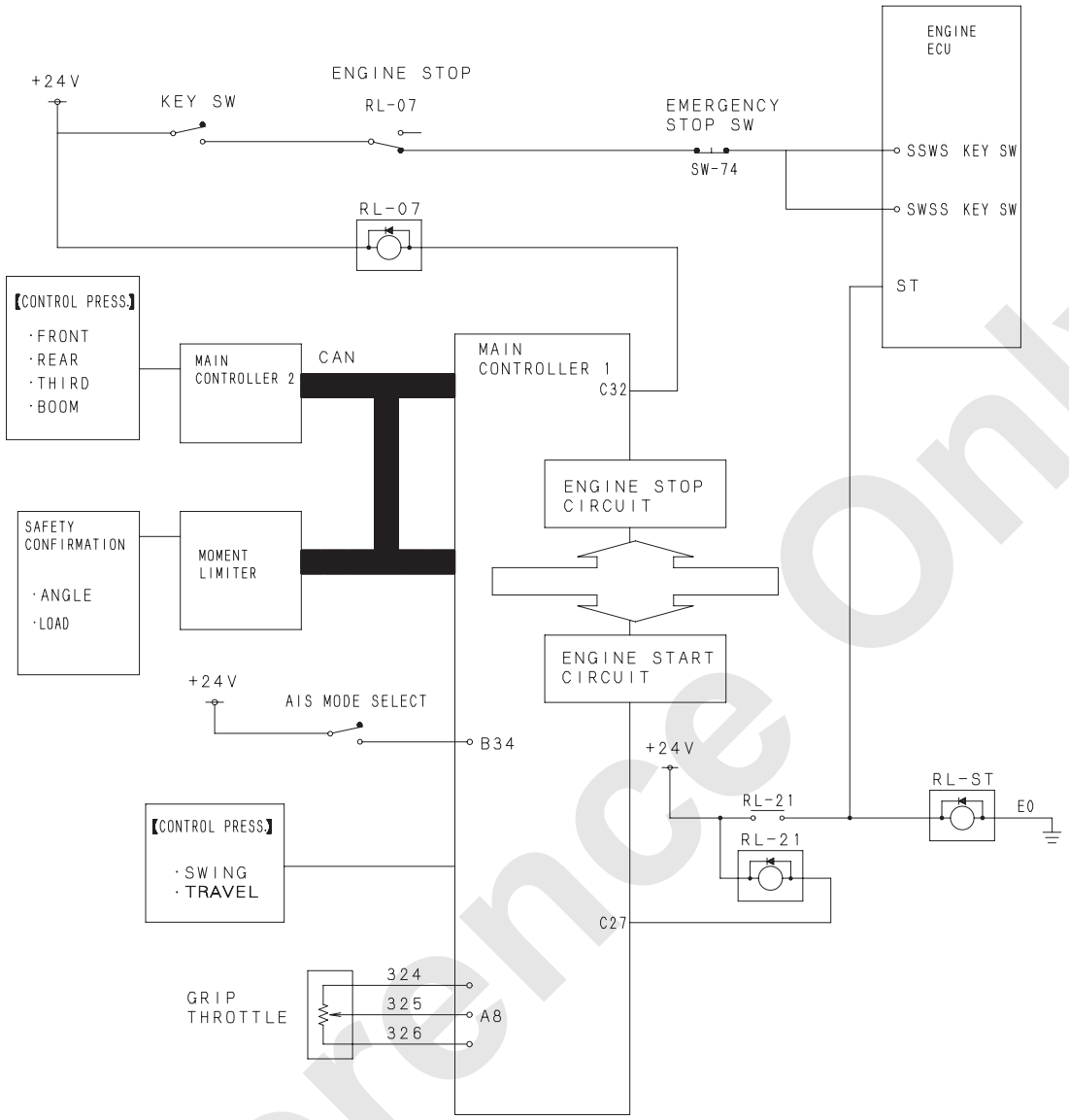

Reference Only

The above circuit diagram is extract from the main diagram for only related portion of this control.(engine stop/re-start)
When the conditions below are met, engine stops automatically.

Engine stop condition	Effective condition	ML permit condition
ML permit	ML permit condition	Configuration condition : Other than assembly/ disassembly, stowing mode
No load engine speed	Low idling ±5 %	
Free fall	Neutral brake mode	
Parking switch	Parking condition	
Control lever neutral	All neutral incl. swing	
Water temp. condition	40 to 80°C (104 to 176°F)	
Oil temp condition	Lower than 60°C (140°F)	

(1) Engine stop action
If the conditions are met and operator's cancellation does not made, main controller 1 energize engine stop relay. (RL-07)
Key switch signal to engine ECU becomes OPEN condition and engine ECU activate as Key OFF condition.

(2) Engine restart
At AIS condition, control is only applied at engine stop condition.
Grip accellerator voltage is monitored and when higher than 20% voltage is detected, engine restart relay (RL-21) becomes energized.
However if engine does not start within 3 seconds, engine restart relay becomes de-energized regardless of grip voltage.

(3) Key cut off fail preventing function.
If AIS condition is continued for longer than certain time, battery relay is turned OFF automatically.

Reference Only

21. HYD. oil heat (option)

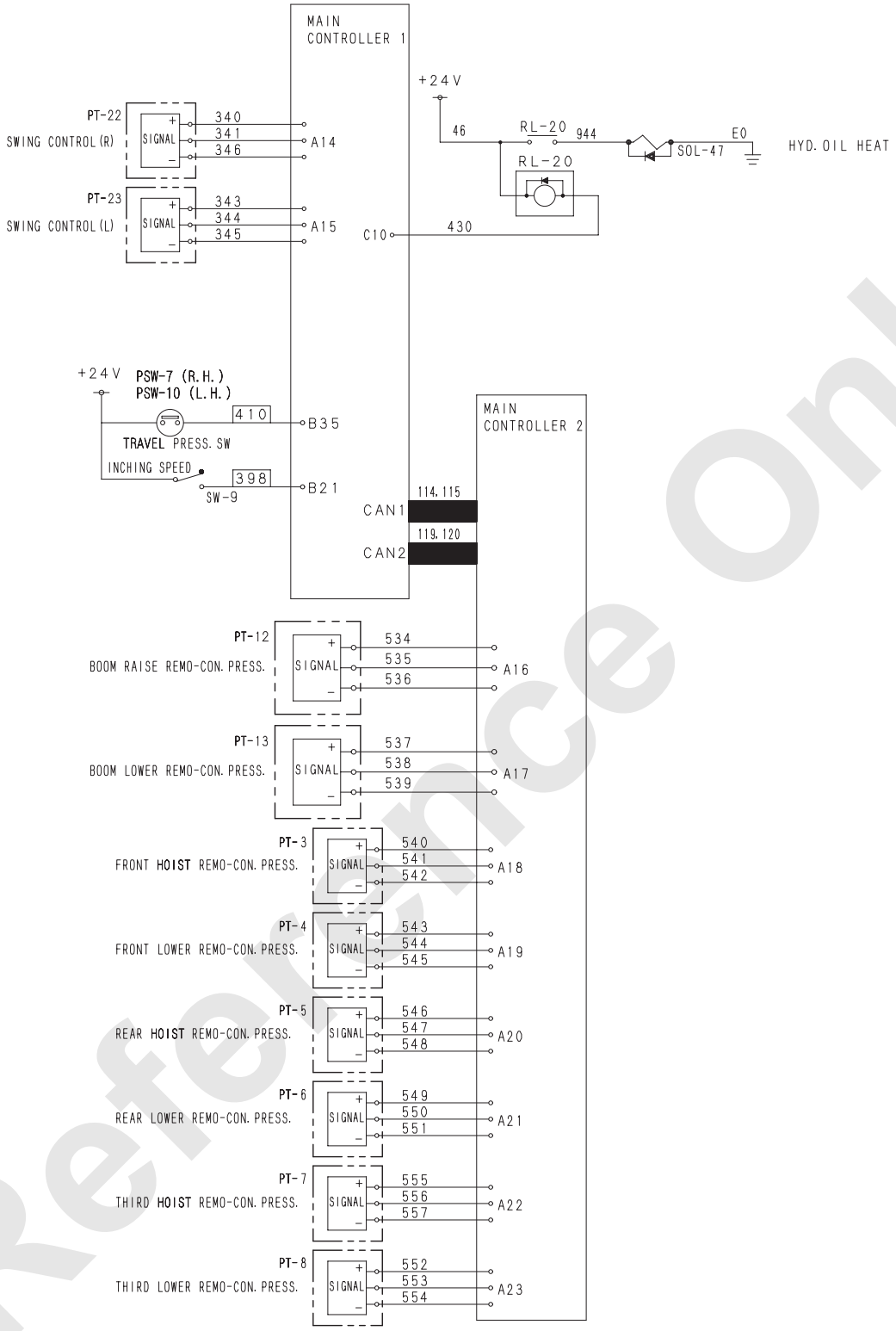

Control	Relay
When all lever is in neutral	Energized
When any lever is in operation	De-energized

Reference Only

10.3.4 MAIN CONTROLLER 1, 2 (HARDWARE)

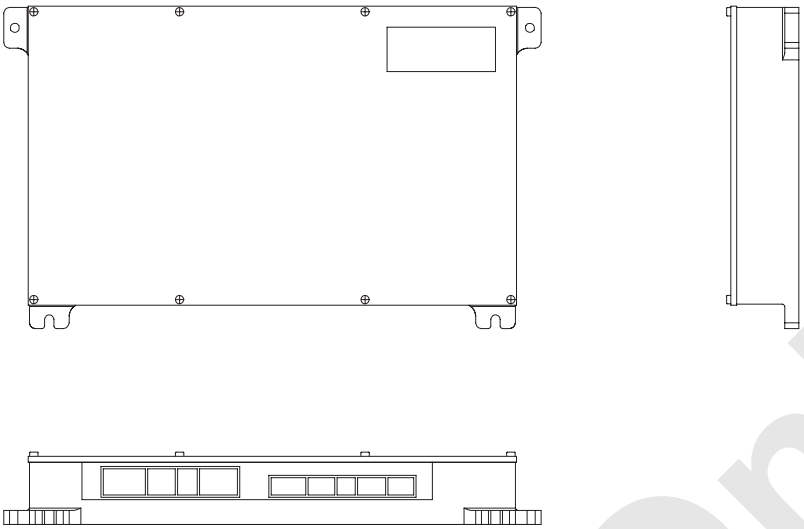

HARNESS SIDE CONNECTOR

MC1 : CN-101F to CN-109F
MC2 : CN-111F to CN-119F

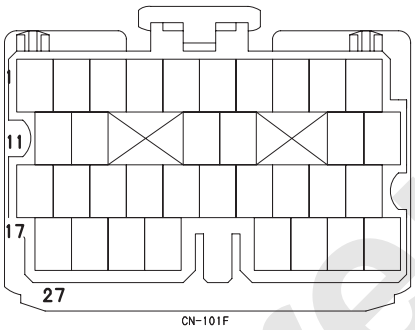

CN-101F
CN-111F

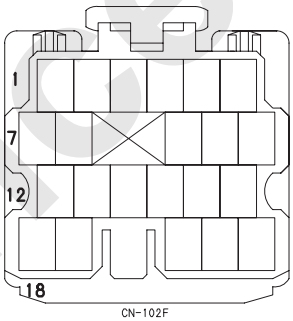

CN-102F
CN-112F

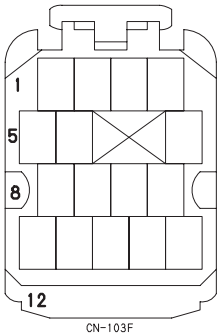

CN-103F
CN-113F

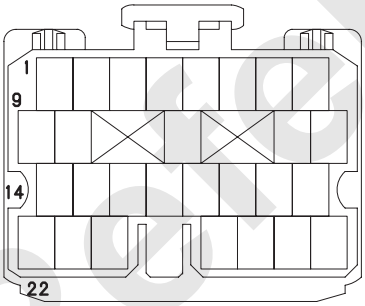

CN-104F
CN-114F

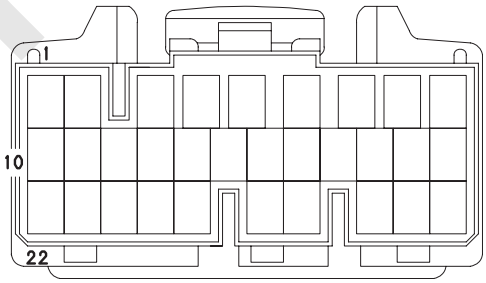

CN-105F
CN-115F

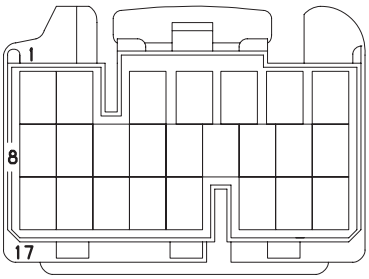

CN-106F
CN-116F

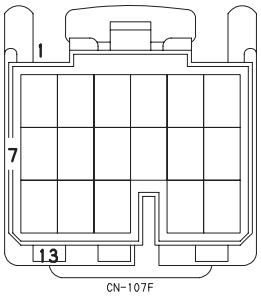

CN-107F
CN-117F

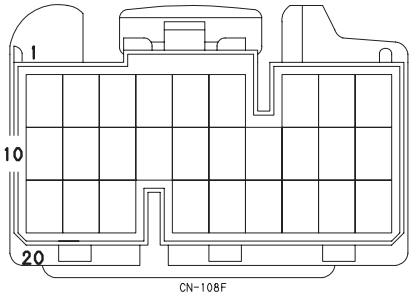

CN-108F
CN-118F

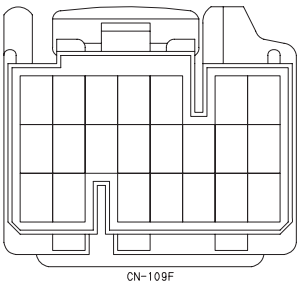

CN-109F
CN-119F

Reference Only

10.3.5 SPECIFICATIONS OF MAIN CONTROLLER INPUT/OUTPUT

1. Specifications of main controller 1 input/output

ANALOGUE INPUT [A]

No.	Name	Range	Input voltage	Judgement
MC1-A01	Reeving winch trimmer			
MC1-A02	A/D Spare			
MC1-A03	Fr. drum motor speed adjusting trimmer	0 to FULL	0.43 to 5V	Input voltage InV ≤ 0.2V.
MC1-A04	Re. drum motor speed adjusting trimmer	0 to FULL	0.43 to 5V	
MC1-A05	Third drum motor speed adjusting trimmer	0 to FULL	0.43 to 5V	
MC1-A06	Boom drum motor speed adjusting trimmer	0 to FULL	0.43 to 5V	
MC1-A07	A/D Spare			
MC1-A08	Grip throttle	LOW to HIGH	0.7 to 5V	Input voltage InV ≤ 0.2V.
MC1-A09	Foot throttle (option)	LOW to HIGH	1.0 to 4.4V	
MC1-A10	Hyd. oil temperature sensor	50 to 130 °C	117.9 Ω to 9.6 Ω	
MC1-A11	Tagline trimmer (option)	0 to FULL	0.43 to 5V	
MC1-A12	Control primary pressure	0 to 19.61 MPa	0.5 to 4.5V	Judge detect among one of following condition. 1. Input voltage InV ≤ 0.1V. 2. Input voltage InV ≤ 4.9V. 3. Input voltage InV ≤ 3.0V with engine oil pressure = ON and changing = OFF.
MC1-A13	Swing pump pressure sensor	0 to 49.03 MPa	0.5 to 4.5V	
MC1-A14	Swing operation (right) pressures sensor	0 to 2.94 MPa	0.5 to 4.5V	
MC1-A15	Swing operation (left) pressures sensor	0 to 2.94 MPa	0.5 to 4.5V	
MC1-A16	Qmax cut solenoid detection pressure	0 to 49.03 MPa	0.5 to 4.5V	
MC1-A17	Power shift pressures sensor	0 to 2.94 MPa	0.5 to 4.5V	
MC1-A18	Supply voltage monitor	19V to 32V	0.5V to 4.8V	Input voltage InV ≤ 2V.
MC1-A19	Inclination detector X	-5 to 5 degrees	0.5 to 4.5V	Input voltage InV ≤ 0.2V.
MC1-A20	Inclination detector Y	-5 to 5 degrees	0.5 to 4.5V	
MC1-A21	Fr. drum clutch pressure sensor	0 to 19.61 MPa	0.5 to 4.5V	Judge detect among one of following condition. 1. Input voltage InV ≤ 0.1V. 2. Input voltage InV ≤ 4.9V. 3. Input voltage InV ≤ 3.0V with engine oil pressure = ON and changing = OFF.
MC1-A22	Third drum clutch pressure sensor (option)	0 to 19.61 MPa	0.5 to 4.5V	
MC1-A23	Re. drum clutch pressure sensor	0 to 19.61 MPa	0.5 to 4.5V	

Reference Only

DIGITAL INPUT [B]

No.	Name	Status	Signal level	Judgement
MC1-B01	ECU status signal	Power ON/OFF	Ground (15 kΩ) / OPEN	
MC1-B02	Engine hyd. pressure PSW	Engine Stop /Work	Ground (15 kΩ) / OPEN	
MC1-B03	Cooling line filter	Clogging / Normal	Ground (3.3 kΩ) / OPEN	
MC1-B04	Clogging of engine air cleaner	Clogging / Normal	Ground (15 kΩ) / OPEN	
MC1-B05	Vacancy		Ground (3.3 kΩ) / OPEN	
MC1-B06	Fr. drum brake cooling oil temperature	Higher temperature / Normal	Ground (3.3 kΩ) / OPEN	
MC1-B07	Re. drum brake cooling oil temperature	Higher temperature / Normal	Ground (3.3 kΩ) / OPEN	
MC1-B08	Radiator water level	Low level / Normal	Ground (3.3 kΩ) / OPEN	
MC1-B09	Engine oil filer	Clogging / Normal	Ground (3.3 kΩ) / OPEN	
MC1-B10	Fr. drum control signal	ON / OFF	Ground (3.3 kΩ) / OPEN	
MC1-B11	Re. drum control signal	ON / OFF	Ground (3.3 kΩ) / OPEN	
MC1-B12	Third drum control signal	ON / OFF	Ground (3.3 kΩ) / OPEN	
MC1-B13	Fr. drum free fall select. signal	Free / Brake	+24V / OPEN	
MC1-B14	Re. drum free fall select. signal	Free / Brake	+24V / OPEN	
MC1-B15	Third drum free fall select. signal	Free / Brake	+24V / OPEN	
MC1-B16	Fr. drum rotation sensor	0 to 500 min^{-1}	Ground (3.3 kΩ) / OPEN	
MC1-B17	Re. drum rotation sensor	0 to 500 min^{-1}	Ground (3.3 kΩ) / OPEN	
MC1-B18	Key switch ON signal	ON / OFF	+24V / OPEN	
MC1-B19	Function lock	Work / Lock	+24V / OPEN	
MC1-B20	Charge signal	Engine Stop /Work	+24V / OPEN	
MC1-B21	Inching select switch	Inching / Normal	+24V / OPEN	
MC1-B22	Aux. accel. signal	ON / OFF	+24V / OPEN	
MC1-B23	Engine emg. stop signal	Stop / Normal	+24V / OPEN	
MC1-B24	Engine restart	Work / Normal	+24V / OPEN	
MC1-B25	Operator certify wait signal	Uncertify / Certify	+24V / OPEN	
MC1-B26	Swing parking switch	Release / Parking	+24V / OPEN	
MC1-B27	Drum rotation detect grip selection	Select / Non-select	+24V / OPEN	

Reference Only

DIGITAL INPUT [B]

No.	Name	Status	Signal level	Judgement
MC1-B28	Controller ID 1	B28=ON, B29=OFF→ MC1	+24V / OPEN	
MC1-B29	Controller ID 2	B28=OFF, B29=ON → MC2	+24V / OPEN	
MC1-B30	G mode / Normal selection	G mode / Normal	+24V / OPEN	
MC1-B31	G winch (Fr.)	High speed / Normal	+24V / OPEN	
MC1-B32	G winch (Re.)	High speed / Normal	+24V / OPEN	
MC1-B33	Energy saving winch (main)	ON / OFF	+24V / OPEN	
MC1-B34	AIS function ON / OFF switch	ON / OFF	+24V / OPEN	
MC1-B35	Traveling operating pressure switch	Control / Neutral	+24V / OPEN	
MC1-B36	Third drum rotation sensor	0 to 500 min^{-1}	Ground (3.3 kΩ) / OPEN	
MC1-B37	Boom drum rotation sensor	0 to 500 min^{-1}	Ground (3.3 kΩ) / OPEN	
MC1-B38	Engine preheat	Preheat / Normal	+24V / OPEN	
MC1-B39	TW latch cylinder (Ex.) signal	Extension / Normal	+24V / OPEN	
MC1-B40	Backup fuse	Normal / Fusion	+24V / OPEN	
MC1-B41	Fr. drum free fall speed increase switch	High / Normal	+24V / OPEN	
MC1-B42	Re. drum free fall speed increase switch	High / Normal	+24V / OPEN	
MC1-B43	Third drum free fall speed increase switch (option)	High / Normal	+24V / OPEN	
MC1-B44	Free fall permit signal	Permit / Lock	+24V / OPEN	
MC1-B45	Fr. drum motor CLM-SOL (FB)	Energized / De-energized	+24V / OPEN	
MC1-B46	Fr. drum motor ESM-SOL (FB)	Energized / De-energized	+24V / OPEN	
MC1-B47	Re. drum motor CLA-SOL (FB)	Energized / De-energized	+24V / OPEN	
MC1-B48	Re. drum motor ESA-SOL (FB)	Energized / De-energized	+24V / OPEN	
MC1-B49	Third drum motor CLT-SOL (FB)	Energized / De-energized	+24V / OPEN	
MC1-B50	Third drum motor EST-SOL (FB)	Energized / De-energized	+24V / OPEN	
MC1-B51	Hyd. oil heat LS (OPT)	Energized / De-energized	+24V / OPEN	
MC1-B52	Pump Qmax cut solenoid (FB)	Energized / De-energized	+24V / OPEN	

Reference Only

DIGITAL INPUT [B]

No.	Name	Status	Signal level	Judgement
MC1-B53	Remote control connection signal	Connected / Unconnected	+24V / OPEN	
MC1-B54	Swing warning (flasher)	Flasher ON/OFF	+24V / OPEN	
MC1-B55	Swing warning (buzzer and flasher)	Buzzer and flasher ON/OFF	+24V / OPEN	
MC1-B56	DPF regeneration (FB)	Energized / De-energized	+24V / OPEN	
MC1-B57	Accel. signal (DOWN)	Rotate down / Holding	+24V / OPEN	
MC1-B58	Accel. signal (UP)	Rotate up / Holding	+24V / OPEN	

ANALOGUE OUTPUT [H]

No.	Name	Status	Signal level	Judgement
MC1-H01	Accel opening signal 1	800 min^{-1} to 2,100 min^{-1}	1 to 4V	
MC1-H02	Accel opening signal 2	800 min^{-1} to 2,100 min^{-1}	1 to 4V	

PROPORTIONAL VALVE OUTPUT [D]

No.	Name	Output current	Dither	Judgement
MC1-D01	Main pump power reduction prop. valve	100 mA to 700 mA	200 mAp-p 100 Hz	When output command value is ≥ 100 mA and feedback current is ≤ 50 mA.
MC1-D02	Boom pump power reduction prop. valve	100 mA to 700 mA	200 mAp-p 100 Hz	
MC1-D03	Swing low speed prop. valve	100 mA to 700 mA	200 mAp-p 100 Hz	
MC1-D04	Swing counterforce prop. valve	150 mA to 510 mA	200 mAp-p 160 Hz	
MC1-D05	Boom pump tilt angle control prop. valve	150 mA to 700 mA	200 mAp-p 100 Hz	
MC1-D06	Fr. drum middle detent	60 mA to 110 mA	None	
MC1-D07	Re. drum middle detent	60 mA to 110 mA	None	
MC1-D08	Main pump tilt a. control prop. valve 1	150 mA to 700 mA	200 mAp-p 100 Hz	
MC1-D09	Main pump tilt a. control prop. valve 2	150 mA to 700 mA	200 mAp-p 100 Hz	
MC1-D10	Tagline prop. valve	100 mA to 700 mA	200 mAp-p 63 Hz	
MC1-D11	Left swing stop prop. valve	100 mA to 700 mA	200 mAp-p 100 Hz	
MC1-D12	Right swing stop prop. valve	100 mA to 700 mA	200 mAp-p 100 Hz	

Reference Only

DIGITAL OUTPUT [C]

No.	Name	Status	Signal level	Judgement
MC1-C01	Fr. drum motor CLM-SOL	Energized / De-energized	GND / OPEN	Judge detect either following condition. 1. Mismatch between output command and actual port condition. 2. Mismatch between output command and MC1-B45 condition.
MC1-C02	Fr. drum motor ESM-SOL	Energized / De-energized	GND / OPEN	Judge detect either following condition. 1. Mismatch between output command and actual port condition. 2. Mismatch between output command and MC1-B46 condition.
MC1-C03	Re. drum motor CLA-SOL	Energized / De-energized	GND / OPEN	Judge detect either following condition. 1. Mismatch between output command and actual port condition. 2. Mismatch between output command and MC1-B47 condition.
MC1-C04	Re. drum motor ESA-SOL	Energized / De-energized	GND / OPEN	Judge detect either following condition. 1. Mismatch between output command and actual port condition. 2. Mismatch between output command and MC1-B48 condition.
MC1-C05	Third drum motor CLT-SOL	Energized / De-energized	GND / OPEN	Judge detect either following condition. 1. Mismatch between output command and actual port condition. 2. Mismatch between output command and MC1-B49 condition.
MC1-C06	Third drum motor EST-SOL	Energized / De-energized	GND / OPEN	Judge detect either following condition. 1. Mismatch between output command and actual port condition. 2. Mismatch between output command and MC1-B50 condition.

Reference Only

DIGITAL OUTPUT [C]

No.	Name	Status	Signal level	Judgement
MC1-C07	Sub battery relay energizing	Energized / De-energized	+24V / OPEN	Mismatch between output command and actual port condition. But judged only at output command is ON.
MC1-C08	Swing parking control	Parking / Release	GND / OPEN (300 mA)	Judge detect all of followings realized. • Swing limit device option setting " ○ ". • Function lock (MC1-B19) is ON condition. • Engine running. • Swing parking input (MC1-B26) has been made even once.
MC1-C09	ML adjust. mode selection	Adjust. Mode / Normal	GND / OPEN (300 mA)	Mismatch between output command and actual port condition.
MC1-C10	Hyd. oil heat SOL	Heat / Normal	GND / OPEN	
MC1-C11	Pump Qmax cut solenoid	Energized / De-energized	GND / OPEN	
MC1-C12	Swing flasher	Lit up / Unlit	GND / OPEN	
MC1-C13	Vacancy		GND / OPEN (PWM)	
MC1-C14	Vacancy		GND / OPEN (PWM)	
MC1-C15	Battery relay energizing	Energized / De-energized	+24V / OPEN	Mismatch between output command and actual port condition. But judged only at output command is ON.
MC1-C16	ML bypass reset	Reset / Bypass possible	GND / OPEN	Mismatch between output command and actual port condition.
MC1-C17	Solenoid cut relay energizing	Solenoid cut / Normal	GND / OPEN	
MC1-C18	Engine warning output	Engine abnormal / Normal	GND / OPEN	
MC1-C19	AIS air con. ON relay energizing	Power ON enabled / Disabled	GND / OPEN	
MC1-C20	Swing neutral brake selection	Neutral brake / Free	GND / OPEN	
MC1-C21	Boom drum rotate detect grip (option)	Energized / De-energized	+24V / OPEN	
MC1-C22	Key return	Resume / Normal	+24V / OPEN	Mismatch between output command and actual port condition.
MC1-C23	TW latch cylinder (retract) output	Retract / Normal	GND / OPEN	
MC1-C24	Camera power		GND / OPEN	
MC1-C25	Key switch ON signal by AIS	ON / OFF	GND / OPEN (PWM)	

Reference Only

DIGITAL OUTPUT [C]

No.	Name	Status	Signal level	Judgement
MC1-C26	DPF regeneration start	Manual regene. start / Normal	GND / OPEN	Judge detect either following condition. 1. Mismatch between output command and actual port condition. 2. Mismatch between output command and MC1-B56 condition.
MC1-C27	Engine restart	Start / Normal	GND / OPEN	Judge detect either following condition. 1. Mismatch between output command and actual port condition. 2. Mismatch between output command and MC1-B24 condition.
MC1-C28	Pilot pressure cut relay	Energized / De-energized	GND / OPEN	Mismatch between output command and actual port condition.
MC1-C29	Fr. drum rotate detect grip (option)	Bumps / dips	+24V / OPEN	
MC1-C30	Re. drum rotate detect grip (option)	Bumps / dips	+24V / OPEN	
MC1-C31	Safety relay operation	Operation / Normal	GND / OPEN	
MC1-C32	Engine stop relay operation	Energized / De-energized	GND / OPEN	
MC1-C33	Swing voice alarm	ON / OFF	GND / OPEN	
MC1-C34	Re. / 3rd. drum change		GND / OPEN	
MC1-C35	Vacancy		GND / OPEN (CPU error)	
MC1-C36	3rd. drum turn detection grip		+24V / OPEN	Mismatch between output command and actual port condition.

Reference Only

2. Specifications of main controller 2 input/output

ANALOGUE INPUT [A]

No.	Name	Range	Input voltage	Judgement
MC2-A01	A/D Spare			
MC2-A02	A/D Spare			
MC2-A03	Fr. drum motor tilt control press. sensor	0 to 2.94 MPa (30 kg/cm^2)	0.5 to 4.5V	Judge detect among one of following condition. 1. Input voltage InV ≤ 0.1V. 2. Input voltage InV ≤ 4.9V. 3. Input voltage InV ≤ 3.0V with engine oil pressure = ON and changing = OFF. 4. Main hoist lever in neutral with the main hoist neutral brake mode. Main hoist motor swash angle pressure ≥ 2.0 MPa.
MC2-A04	Re. drum motor tilt control press. sensor	0 to 2.94 MPa (30 kg/cm^2)	0.5 to 4.5V	Judge detect among one of following condition. 1. Input voltage InV ≤ 0.1V. 2. Input voltage InV ≤ 4.9V. 3. Input voltage InV ≤ 3.0V with engine oil pressure = ON and changing = OFF. 4. Aux. hoist lever in neutral with the main hoist neutral brake mode. Aux. hoist motor swash angle pressure ≥ 2.0 MPa.
MC2-A05	Third drum motor tilt control press. sensor	0 to 2.94 MPa (30 kg/cm^2)	0.5 to 4.5V	Judge detect among one of following condition. 1. Input voltage InV ≤ 0.1V. 2. Input voltage InV ≤ 4.9V. 3. Input voltage InV ≤ 3.0V with engine oil pressure = ON and changing = OFF.
MC2-A06	A/D Spare			
MC2-A07	Fuel level	F to 1/2 to E → 10 to 32 to 83 Ω	Grounded input (56 Ω)	Input voltage InV ≤ 0.2V.
MC2-A08	Confluence / Independence select pressure (Fr.)	0 to 49.03 MPa (500 kg/cm^2)	0.5 to 4.5V	Judge detect among one of following condition. 1. Input voltage InV ≤ 0.2V. 2. At single oil flow : Input pressure ≥ 3.0 Mpa. 3. At confluence flow : Input pressure < 3.0 Mpa.

Reference Only

ANALOGUE INPUT [A]

No.	Name	Range	Input voltage	Judgement
MC2-A09	Confluence / Independence select pressure (Re.)	0 to 49.03 MPa (500 kg/cm^2)	0.5 to 4.5V	Judge detect among one of following condition. 1. Input voltage InV ≤ 0.2V. 2. At single oil flow : Input pressure ≥ 3.0 Mpa. 3. At confluence flow : Input pressure < 3.0 Mpa.
MC2-A10	A/D Spare		Grounded input (56 Ω)	
MC2-A11	Fr., Re. drum CHP start pressure sensor	0 to 2.94 MPa (30 kg/cm^2)	0.5 to 4.5V	Judge detect among one of following condition. 1. Input voltage InV ≤ 0.1V. 2. Input voltage InV ≤ 4.9V. 3. Input voltage InV ≤ 3.0V with engine oil pressure = ON and changing = OFF. • At single oil flow : Input pressure ≥ 2.7 Mpa. • At confluence flow : Input pressure < 2.7 Mpa.
MC2-A12	A/D Spare			
MC2-A13	A/D Spare			
MC2-A14	A/D Spare			
MC2-A15	A/D Spare			
MC2-A16	Boom drum raise pressure sensor	0 to 2.94 MPa (30 kg/cm^2)	0.5 to 4.5V	Judge detect among one of following condition. 1. Input voltage InV ≤ 0.1V. 2. Input voltage InV ≥ 4.9V. 3. Input voltage InV ≥ 3.0V with engine oil pressure = ON, charging = OFF, function lock = OFF.
MC2-A17	Boom drum lower pressure sensor	0 to 2.94 MPa (30 kg/cm^2)	0.5 to 4.5V	
MC2-A18	Fr. drum hoist pressure sensor	0 to 2.94 MPa (30 kg/cm^2)	0.5 to 4.5V	
MC2-A19	Fr. drum lower pressure sensor	0 to 2.94 MPa (30 kg/cm^2)	0.5 to 4.5V	
MC2-A20	Re. drum hoist pressure sensor	0 to 2.94 MPa (30 kg/cm^2)	0.5 to 4.5V	
MC2-A21	Re. drum lower pressure sensor	0 to 2.94 MPa (30 kg/cm^2)	0.5 to 4.5V	
MC2-A22	Third drum hoist pressure sensor	0 to 2.94 MPa (30 kg/cm^2)	0.5 to 4.5V	
MC2-A23	Third drum lower pressure sensor	0 to 2.94 MPa (30 kg/cm^2)	0.5 to 4.5V	

Reference Only

DIGITAL INPUT [B]

No.	Name	Range	Input voltage	Judgement
MC2-B01	C/W detect 3		GND (15 kΩ) / OPEN	
MC2-B02	C/W detect 4		GND (15 kΩ) / OPEN	
MC2-B03	C/W detect 5 (C4, C5)		GND (15 kΩ) / OPEN	
MC2-B04	C/W detect 6 (C5)		GND (15 kΩ) / OPEN	
MC2-B05	C/W detect 7 (C5)		GND (15 kΩ) / OPEN	
MC2-B06	CB/W detect	Detection / Non-detection	Ground (15 kΩ) / OPEN	
MC2-B07			GND (15 kΩ) / OPEN	
MC2-B08			GND (15 kΩ) / OPEN	
MC2-B09			GND (15 kΩ) / OPEN	
MC2-B10			GND (15 kΩ) / OPEN	
MC2-B11			GND (15 kΩ) / OPEN	
MC2-B12			GND (15 kΩ) / OPEN	
MC2-B13	Crane boom overhoist signal	Normal / Overhoist	+24V / OPEN	
MC2-B14	Boom B/S No. 1 signal	Normal / Overhoist	+24V / OPEN	
MC2-B15	Boom B/S No. 2 signal	Normal / Overhoist	+24V / OPEN	
MC2-B16			GND (3.3 kΩ) / OPEN	
MC2-B17			GND (3.3 kΩ) / OPEN	
MC2-B18			+24V / OPEN	
MC2-B19	Function lock	Work / stop	+24V / OPEN	
MC2-B20	Charge signal (alternator power generation signal)	With power generation / Without power generation	+24V / OPEN	
MC2-B21	Inching selection switch	Inching / Normal	+24V / OPEN	
MC2-B22			+24V / OPEN	
MC2-B23			+24V / OPEN	
MC2-B24	Crane hook overhoist signal	Normal / Overhoist	+24V / OPEN	
MC2-B25	Jib hook overhoist signal	Normal / Overhoist	+24V / OPEN	
MC2-B26	Hook overhoist release signal	Release / Normal	+24V / OPEN	

Reference Only

DIGITAL INPUT [B]

No.	Name	Range	Input voltage	Judgement
MC2-B27	Boom hoisting release signal	Release / Normal	+24V / OPEN	
MC2-B28	Controller ID 1		+24V / OPEN	
MC2-B29	Controller ID 2		+24V / OPEN	
MC2-B30	Fr. drum hoist stop	Normal / Stop	+24V / OPEN	
MC2-B31	Fr. drum lower stop (CEN)	Normal / Stop	+24V / OPEN	
MC2-B32	Re. drum (tower jib) hoist stop	Normal / Stop	+24V / OPEN	
MC2-B33	Re. drum (tower jib) lower stop	Normal / Stop	+24V / OPEN	
MC2-B34			+24V / OPEN	
MC2-B35	Jib overhoist signal	Normal / Overhoist	+24V / OPEN	
MC2-B36	C/W detect 1		GND (3.3 kΩ) / OPEN	
MC2-B37	C/W detect 2		GND (3.3 kΩ) / OPEN	
MC2-B38	Confluence / independence selection SOL (Fr. drum)		+24V / OPEN	
MC2-B39	Confluence / independence selection SOL (Re. drum)		+24V / OPEN	
MC2-B40	Oil cooler motor relay	ON / OFF	+24V / OPEN	
MC2-B41	Third drum hoist stop	Normal / Stop	+24V / OPEN	
MC2-B42	Third drum lower stop	Normal / Stop	+24V / OPEN	
MC2-B43	Boom drum raise stop	Normal / Stop	+24V / OPEN	
MC2-B44	Boom drum lower stop	Normal / Stop	+24V / OPEN	
MC2-B45	DPF load SOL	Load ON / OFF	+24V / OPEN	
MC2-B46			+24V / OPEN	
MC2-B47			+24V / OPEN	
MC2-B48			+24V / OPEN	
MC2-B49			+24V / OPEN	
MC2-B50			+24V / OPEN	
MC2-B51			+24V / OPEN	
MC2-B52			+24V / OPEN	
MC2-B53	ML bypass (CR)	ON / OFF	+24V / OPEN	
MC2-B54	ML bypass (JIB)	ON / OFF	+24V / OPEN	
MC2-B55			+24V / OPEN	
MC2-B56			+24V / OPEN	
MC2-B57			+24V / OPEN	
MC2-B58			+24V / OPEN	

Reference Only

ANALOGUE OUTPUT [H]

No.	Name	Status	Signal level	Judgement
MC2-H01				
MC2-H02				

PROPORTIONAL VALVE OUTPUT [D]

No.	Name	Output current	Dither	Judgement
MC2-D01	Boom drum raise prop. valve	200 to 625 mA	200 mAp-p 100 Hz	When output command value is ≥ 100 mA and feedback current is ≤ 50 mA.
MC2-D02	Boom drum lower prop. valve	200 to 625 mA	200 mAp-p 100 Hz	
MC2-D03	Fr. drum hoist prop. valve	150 to 620 mA	200 mAp-p 100 Hz	
MC2-D04	Fr. drum lower prop. valve	150 to 620 mA	200 mAp-p 100 Hz	
MC2-D05	Re. drum hoist prop. valve	150 to 620 mA	200 mAp-p 100 Hz	
MC2-D06	Re. drum lower prop. valve	150 to 620 mA	200 mAp-p 100 Hz	
MC2-D07	Third drum hoist prop. valve (option)	150 to 620 mA	200 mAp-p 100 Hz	
MC2-D08	Third drum lower prop. valve (option)	150 to 620 mA	200 mAp-p 100 Hz	
MC2-D09	Motor CHP pressure control prop. valve	100 to 400 mA	200 mAp-p 100 Hz	
MC2-D10	Fr. drum motor tilt control prop. valve	200 to 750 mA	200 mAp-p 100 Hz	
MC2-D11	Re. drum motor tilt control prop. valve	200 to 750 mA	200 mAp-p 100 Hz	
MC2-D12	Third drum motor tilt control prop. valve (option)	200 to 750 mA	200 mAp-p 100 Hz	

Reference Only

DIGITAL OUTPUT [C]

No.	Name	Output current	Dither	Judgement
MC2-C01			GND / OPEN	
MC2-C02			GND / OPEN	
MC2-C03			GND / OPEN	
MC2-C04			GND / OPEN	
MC2-C05			GND / OPEN	
MC2-C06			GND / OPEN	
MC2-C07			GND / OPEN (300 mA)	
MC2-C08			GND / OPEN (300 mA)	
MC2-C09			GND / OPEN (300 mA)	
MC2-C10			GND / OPEN	
MC2-C11			GND / OPEN	
MC2-C12			GND / OPEN	
MC2-C13			GND / OPEN (PWM)	
MC2-C14			GND / OPEN (PWM)	
MC2-C15	Fr. drum motor boost SOL	Boost / Normal	+24V / OPEN	Mismatch between output command and actual port condition.
MC2-C16	Oil cooler electric motor	ON / OFF	GND / OPEN	Judge detect either following condition. 1. Mismatch between output command and actual port condition. 2. Mismatch between output command and MC2-B40 condition.
MC2-C17	Confluence / independence select SOL (Fr. drum)	Confluence / independence	GND / OPEN	Judge detect either following condition. 1. Mismatch between output command and actual port condition. 2. Mismatch between output command and MC2-B38 condition.
MC2-C18	Confluence/independence select SOL (Re. drum)	Confluence / independence	GND / OPEN	Judge detect either following condition. 1. Mismatch between output command and actual port condition. 2. Mismatch between output command and MC2-B39 condition.

Reference Only

DIGITAL OUTPUT [C]

No.	Name	Output current	Dither	Judgement
MC2-C19	DPF load SOL	Load ON / OFF	GND / OPEN	Judge detect either following condition. 1. Mismatch between output command and actual port condition. 2. Mismatch between output command and MC2-B45 condition.
MC2-C20			GND / OPEN	
MC2-C21	Re. drum motor boost SOL	Boost / Normal	+24V / OPEN	Mismatch between output command and actual port condition.
MC2-C22	Third drum motor boost SOL (option)	Boost / Normal	+24V / OPEN	Mismatch between output command and actual port condition.
MC2-C23			GND / OPEN	
MC2-C24			GND / OPEN	
MC2-C25			GND / OPEN (PWM)	
MC2-C26	Fr. drum control signal		GND / OPEN	Mismatch between output command and actual port condition.
MC2-C27	Re. drum control signal		GND / OPEN	Mismatch between output command and actual port condition.
MC2-C28	Third control signal		GND / OPEN	Mismatch between output command and actual port condition.
MC2-C29	Fr. drum C/V-SOL	Energized / De-energized	+24V / OPEN	Mismatch between output command and actual port condition.
MC2-C30	Re. drum C/V-SOL	Energized / De-energized	+24V / OPEN	Mismatch between output command and actual port condition.
MC2-C31			GND / OPEN	
MC2-C32			GND / OPEN	
MC2-C33			GND / OPEN	
MC2-C34			GND / OPEN	
MC2-C35			GND / OPEN (CPU error)	
MC2-C36	Third C / V-SOL (option)	Energized / De-energized	+24V / OPEN	Mismatch between output command and actual port condition.

Reference Only

10.3.6 ARRANGEMENT OF MAIN CONTROLLER CONNECTOR PIN

1. Arrangement of MC1 connector pin

Connector No.	Pin No.	Port name	Function	Specifications	Ref.
CN101	1	+5VA	A1	Spare	
	2	GD2		Spare	
	3	TXD2		Spare	
	4	RXD2		Spare	
	5	CANH1		CAN1_H	
	6	CANL1		CAN1_L	
	7	CAN1 termination		Spare	
	8	CAN1 termination		Spare	
	9	CANH2		CAN2_H	
	10	CANL2		CAN2_L	
	11	A1		Spare	
	12	RTS		Spare	
	13	CTS		Spare	
	14	SHG2		Spare	
	15	CAN2 termination		Spare	
	16	CAN2 termination		Spare	
	17	A2	Resistance input	Spare	
	18	GA	A1	Spare	
	19	TXD1		Spare	
	20	RXD1		Spare	
	21	GD1		Spare	
	22	SHG1		Spare	
	23	TXD3		Program DL serial	
	24	RXD3			
	25	DL			
	26	GD3			
	27	GA	A2	Spare	
	28	E1+	Engine turn sensor	Spare	
	29	E1-		Spare	
	30	SHG3		Spare	
	31	H1+		Accel. indicator voltage 1＋	
	32	H1-		Accel. indicator voltage 1－	
	33	H2+		Accel. indicator voltage 2＋	
	34	H2-		Accel. indicator voltage 2－	

Reference Only

Connector No.	Pin No.	Port name	Function	Specifications	Ref.
CN102	1	+5VA	A3	Fr. drum motor speed adjusting trimmer	
	2	A3			
	3	GA	A3		
	4	+5VA	A4	Re. drum motor speed adjusting trimmer	
	5	A4			
	6	GA	A4		
	7	+5VA	A5	Third drum motor speed adjusting trimmer	
	8	A5			
	9	GA	A5		
	10	+5VA	A6	Boom drum motor speed adjusting trimmer	
	11	A6			
	12	GA	A6		
	13	A7	Resistance input	Spare	
	14	GA	A7		
	15	+5VA	A8	Grip throttle	
	16	A8			
	17	GA	A8		
	18	+5VA	A9	Foot throttle (option)	
	19	A9			
	20	GA	A9		
	21	A10	Resistance input	Hydraulic oil temperature sensor	
	22	GA	A10		

Connector No.	Pin No.	Port name	Function	Specifications	Remarks
CN103	1	+5A	A11	Tagline trimmer (option)	
	2	A11			
	3	GA	A11		
	4	+5A	A12	Control primary pressure	
	5	A12			
	6	GA	A12		
	7	+5A	A13	Swing pump pressure sensor	
	8	A13			
	9	GA	A13		
	10	+5A	A14	Swing control (right) pressure sensor	
	11	A14			
	12	GA	A22	GND for third clutch pressure sensor (option)	
	13	+5A	A15	Swing control (left) pressure sensor	
	14	A15			
	15	GA	A15		
	16	GA	A14	GND for swing control (right) pressure sensor	

Reference Only

Connector No.	Pin No.	Port name	Function	Specifications	Remarks
CN104	1	B1	Grounded input (15 KΩ)	ECU signal	
	2	+5A	A16	Qmax cut solenoid detection pressure	
	3	A16			
	4	GA	A16		
	5	+5A	A17	Power shift pressure sensor	
	6	A17			
	7	GA	A17		
	8	+5A	A18	+5V for supply voltage monitoring	
	9	B2	Grounded input (15 KΩ)	Engine oil. pressure PSW	
	10	+5A	A19	+5V for Inclination sensor X	
	11	+5A	A20	+5 V for Inclination sensor Y	
	12	A18		Supply voltage monitoring	
	13	GA	A18		
	14	B3	Grounded input (15 KΩ)	CB/W detect	
	15	A19		Inclination sensor X	
	16	A20		Inclination sensor Y	
	17	GA	A20		
	18	'+5A	A21	Fr. drum clutch pressure sensor	
	19	A21			
	20	GA	A21		
	21	'+5A	A22	+5V for third drum clutch pressure sensor (option)	
	22	B4	Grounded input (15 KΩ)	Clogging of air cleaner	
	23	B5	Grounded input (3.3 KΩ)	Spare	
	24	GA	A19	GND for Inclination sensor X	
	25	'+5A	A23	Re. drum clutch pressure sensor	
	26	A23			
	27	GA	A23		
	28	A22		Third drum clutch pressure sensor (option)	

Reference Only

Connector No.	Pin No.	Port name	Function	Specifications	Remarks
CN105	1	+24 V 1	Battery (+)	Power supply	
	2	+24 V		Power supply	
	3	+24 V		Power supply	
	4	B6	Grounded input (3.3 KΩ)	Fr. drum brake cooling oil temperature	
	5	B7	Grounded input (3.3 KΩ)	Re. drum brake cooling oil temperature	
	6	B8	Grounded input (3.3 KΩ)	Radiator water level	
	7	B9	Grounded input (3.3 KΩ)	Engine oil filter	
	8	GND	Battery (-)	GND	
	9	GND		GND	
	10	D10+		Tagline tension prop. valve +	
	11	D1+		Main pump horse power control prop. valve	
	12	D1-			
	13	D2+		Boom pump horse power control prop. valve	
	14	D2-			
	15	D3+		Swing low speed prop. valve	
	16	D3-			
	17	D4+		Swing counterforce prop. valve	
	18	D4-			
	19	D5+		Boom pump tilt control prop. valve	
	20	D5-			
	21	GND	Battery (-)	GND	
	22	D10-		Tagline tension prop. valve -	
	23	B10	Grounded input (3.3 KΩ)	Fr. drum control signal	
	24	B11	Grounded input (3.3 KΩ)	Re. drum control signal	
	25	B12	Grounded input (3.3 KΩ)	Third drum control signal	
	26	B13	+24 V input	Fr. drum free fall select. signal	
	27	B14	+24 V input	Re. drum free fall select. signal	
	28	B15	+24 V input	Third drum free fall select. signal	
	29	B16	Grounded input (3.3 KΩ) (and pulse input)	Fr. drum rotate sensor	
	30	B17	Grounded input (3.3 KΩ) (and pulse input)	Re. drum rotate sensor	
	31	+24 V	For backup power supply RTC		

Reference Only

Connector No.	Pin No.	Port name	Function	Specifications	Remarks
CN106	1	+24 V 1	Battery (+)		
	2	D6+		Fr. drum middle detent	
	3	D6-			
	4	D7+		Re. drum middle detent	
	5	D7-			
	6	D11+		Left swing stop proportional valve	
	7	D11-			
	8	D8+		Main pump tilt control prop. valve 1	
	9	D8-			
	10	D9+		Main pump tilt control prop. valve 2	
	11	D9-			
	12	B18	+24 V input	Key SW ON signal	
	13	B19	+24 V input	Function lock	
	14	B20	+24 V input	Charge signal	
	15	D12+		Right swing stop proportional valve	
	16	D12-			
	17	GND	Battery (-)	Spare	
	18	B21	+24 V input	Inching selection	
	19	B22	+24 V input	Aux. accel. signal	
	20	B23	+24 V input	Engine emg. stop signal	
	21	B24	+24 V input	Engine restart	
	22	B25	+24 V input	Operator certificate wait signal	
	23	B26	+24 V input	Swing parking switch	
	24	B27	+24 V input	Drum rotate detecting grip selection	

Reference Only

Connector No.	Pin No.	Port name	Function	Specifications	Remarks
CN107	1	B28	D/O FB	Controller ID 1	
	2	B29	D/O FB	Controller ID 2	
	3	B30	+24 V input	G mode/Normal selection	
	4	B31	+24 V input	G winch (Fr.)	
	5	B32	+24 V input	G winch (Re.)	
	6	B33	+24 V input	G winch (main)	
	7	B34	D/O FB	AIS function ON/OFF SW	
	8	B35	+24 V input	Travel control pressure switch	
	9	B36	Grounded input (3.3 KΩ) (and pulse input)	Spare	
	10	B37	Grounded input (3.3 KΩ) (and pulse input)	Cooling line filter	
	11	B38	+24 V input	Engine preheat	
	12	B39	+24 V input	Spare	
	13	B40	D/O FB	Backup fuse	
	14	B41	+24 V input	Fr. drum free fall speed increase SW	
	15	B42	+24 V input	Re. drum free fall speed increase SW	
	16	B43	+24 V input	Third drum free fall speed increase SW (option)	
	17	B44	+24 V input	Free fall permit signal	

Reference Only

Connector No.	Pin No.	Port name	Function	Specifications	Remarks
CN108	1	C1	Grounded output	Fr. drum motor CLM-SOL	
	2	C2	Grounded output	Fr. drum motor ESM-SOL	
	3	C3	Grounded output	Re. drum motor CLA-SOL	
	4	C4	Grounded output	Re. drum motor ESA-SOL	
	5	C5	Grounded output	Third drum motor CLT-SOL	
	6	B45	D/O FB	Fr. drum motor CLM-SOL (FB)	
	7	B46	D/O FB	Fr. drum motor ESM-SOL (FB)	
	8	B47	D/O FB	Re. drum motor CLA-SOL (FB)	
	9	B48	D/O FB	Re. drum motor ESA-SOL (FB)	
	10	C6	Grounded output	Third drum motor EST-SOL	
	11	C7	Grounded output	Spare	
	12	C8	Grounded output	Swing parking control	
	13	C9	Grounded output	ML adjust. mode selection	
	14	C10	Grounded output	Hyd. oil heat SOL	
	15	B49	D/O FB	Third motor CLT-SOL (FB)	
	16	B50	D/O FB	Third motor EST-SOL (FB)	
	17	B51	D/O FB	Hyd. oil heat LS(option)	
	18	B52	D/O FB	Pump Qmax cut solenoid (FB)	
	19	B53	D/O FB	Remote control connection signal	
	20	C11	Grounded output	Pump Qmax cut solenoid	
	21	C12	Grounded output	Swing flasher	
	22	C13	PWM output	Spare	
	23	C14	PWM output	Spare	
	24	B54	D/O FB	Swing warning (flasher)	
	25	B55	D/O FB	Swing warning (Buzzer and flasher)	
	26	B56	D/O FB	DPF regeneration FB）	
	27	B57	D/O FB	Accel. signal (DOWN)	
	28	B58	D/O FB	Accel. signal (UP)	

Reference Only

Connector No.	Pin No.	Port name	Function	Specifications	Remarks
CN109	1	C15	+24 V output	Battery relay energizing	
	2	C16	Grounded output	ML bypass reset	
	3	C17	Grounded output	Solenoid cut relay energizing	
	4	C18	Grounded output	Engine warning output	
	5	C19	Grounded output	AIS air con. ON relay energizing	
	6	C20	Grounded output	Swing neutral brake selection	
	7	C21	+24 V output	Sub battery relay energizing	
	8	C22	+24 V output	Spare	
	9	C23	Grounded output	Spare	
	10	C24	Grounded output	Spare	
	11	C25	PWM output	Spare	
	12	C26	Grounded output	DPF regeneration start	
	13	C27	Grounded output	Engine restart	
	14	C28	Grounded output	Pilot pressure cut relay	
	15	C29	+24 V output	Fr. drum rotate detection grip (option)	
	16	C30	+24 V output	Re. drum rotate detection grip (option)	
	17	C31	Grounded output	Safety relay operation	
	18	C32	Grounded output	Engine stop relay operation	
	19	C33	Grounded output	Swing voice alarm	
	20	C34	Grounded output	Spare	
	21	C35	Grounded output	Spare	
	22	C36	+24 V output	Spare	

Reference Only

2. Arrangement of MC2 connector pin

Connector No.	Pin No.	Port name	Function	Specifications	Ref.
CN111	1	+5VA	A1	Vacancy	
	2	GD2		Vacancy	
	3	TXD2		Vacancy	
	4	RXD2		Vacancy	
	5	CANH1		CAN1_H	
	6	CANL1		CAN1_L	
	7	CAN1 termination		Vacancy	
	8	CAN1 termination		Vacancy	
	9	CANH2		CAN2_H	
	10	CANL2		CAN2_L	
	11	A1		Vacancy	
	12	RTS		Vacancy	
	13	CTS		Vacancy	
	14	SHG2		Vacancy	
	15	CAN2 termination		Vacancy	
	16	CAN2 termination		Vacancy	
	17	A2	Resistance input	Vacancy	
	18	GA	A1	Vacancy	
	19	TXD1		Vacancy	
	20	RXD1		Vacancy	
	21	GD1		Vacancy	
	22	SHG1		Vacancy	
	23	TXD3		Program DL serial	
	24	RXD3			
	25	DL			
	26	GD3			
	27	GA	A2	Vacancy	
	28	E1+	Engine rotate sensor	Vacancy	
	29	E1-		Vacancy	
	30	SHG3		Vacancy	
	31	H1+		Vacancy	
	32	H1-		Vacancy	
	33	H2+		Vacancy	
	34	H2-		Vacancy	

Reference Only

Connector No.	Pin No.	Port name	Function	Specifications	
CN112	1	+5VA	A3	Fr. drum motor tilt control pressure sensor	
	2	A3			
	3	GA	A3		
	4	+5VA	A4	Re. drum motor tilt control pressure sensor	
	5	A4			
	6	GA	A4		
	7	+5VA	A5	Third drum motor tilt control pressure sensor	
	8	A5			
	9	GA	A5		
	10	+5VA	A6	A/D spare	
	11	A6			
	12	GA	A6		
	13	A7	Resistance input	Fuel level	
	14	GA	A7		
	15	+5VA	A8	Confluence/Independence selection pressure (Fr. drum)	
	16	A8			
	17	GA	A8		
	18	+5VA	A9	Confluence/Independence selection pressure (Re. drum)	
	19	A9			
	20	GA	A9		
	21	A10	Resistance input	A/D spare	
	22	GA	A10		

Connector No.	Pin No.	Port name	Function	Specifications	
CN113	1	+5A	A11	Fr./Re. drum CHP start pressure sensor	
	2	A11			
	3	GA	A11		
	4	+5A	A12	A/D spare	
	5	A12			
	6	GA	A12		
	7	+5A	A13	A/D spare	
	8	A13			
	9	GA	A13		
	10	+5A	A14	A/D spare	
	11	A14			
	12	GA	A22	Third drum raise pressure sensor	
	13	+5A	A15	A/D spare	
	14	A15			
	15	GA	A15		
	16	GA	A14	A/D spare	

Reference Only

Connector No.	Pin No.	Port name	Function	Specifications	
CN114	1	B1	Grounded input (15 KΩ)	C/W detect 3	
	2	+5A	A16	Boom drum raise pressure sensor	
	3	A16			
	4	GA	A16		
	5	+5A	A17	Boom drum lower pressure sensor	
	6	A17			
	7	GA	A17		
	8	+5A	A18	Fr. drum hoist pressure sensor	
	9	B2	Grounded input (15 KΩ)	C/W detect 4	
	10	+5A	A19	Fr. drum lower pressure sensor	
	11	+5A	A20	Re. drum hoist pressure sensor	
	12	A18		Fr. drum hoist pressure sensor	
	13	GA	A18		
	14	B3	Grounded input (15 KΩ)	C/W detect 5 (C4, C5)	
	15	A19		Fr. drum lower pressure sensor	
	16	A20		Re. drum hoist pressure sensor	
	17	GA	A20		
	18	'+5A	A21	Re. drum lower pressure sensor	
	19	A21			
	20	GA	A21		
	21	'+5A	A22	Third drum hoist pressure sensor	
	22	B4	Grounded input (15 KΩ)	C/W detect 6 (C5)	
	23	B5	Grounded input (3.3 KΩ)	C/W detect 7 (C5)	
	24	GA	A19	Fr. drum lower pressure sensor	
	25	'+5A	A23	Third drum lower pressure sensor	
	26	A23			
	27	GA	A23		
	28	A22		Third drum hoist pressure sensor	

Reference Only

Connector No.	Pin No.	Port name	Function	Specifications	
CN115	1	+24 V 1	Battery (+)	Power supply	
	2	+24 V		Power supply	
	3	+24 V		Power supply	
	4	B6	Grounded input (3.3 KΩ)	Fr. drum brake cooling oil temperature	
	5	B7	Grounded input (3.3 KΩ)	Re. drum brake cooling oil temperature	
	6	B8	Grounded input (3.3 KΩ)	Radiator water level	
	7	B9	Grounded input (3.3 KΩ)	Engine oil filter	
	8	GND	Battery (-)	GND	
	9	GND		GND	
	10	D10+		Fr. drum motor tilt control prop. valve +	
	11	D1+		Boom drum raise proportional valve	
	12	D1-			
	13	D2+		Boom drum lower proportional valve	
	14	D2-			
	15	D3+		Fr. drum hoist proportional valve	
	16	D3-			
	17	D4+		Fr. drum lower proportional valve	
	18	D4-			
	19	D5+		Re. drum hoist proportional valve	
	20	D5-			
	21	GND	Battery (-)	GND	
	22	D10-		Fr. drum motor tilt control prop. valve -	
	23	B10	Grounded input (3.3 KΩ)	Spare	
	24	B11	Grounded input (3.3 KΩ)	Spare	
	25	B12	Grounded input (3.3 KΩ)	Spare	
	26	B13	+24 V input	Crane boom overhoist signal	
	27	B14	+24 V input	Boom B/S No.1 signal	
	28	B15	+24 V input	Boom B/S No.2 signal	
	29	B16	Grounded input (3.3 KΩ) (and pulse input)	Spare	
	30	B17	Grounded input (3.3 KΩ) (and pulse input)	Spare	
	31	+24 V	For backup power supply RTC	Power supply	

Reference Only

Connector No.	Pin No.	Port name	Function	Specifications	Remarks
CN116	1	+24 V 1	Battery (+)	Power supply	
	2	D6+		Re. drum lower proportional valve	
	3	D6-			
	4	D7+		Third drum hoist proportional valve (option)	
	5	D7-			
	6	D11+		Re. drum motor tilt control prop. valve	
	7	D11-			
	8	D8+		Third drum lower prop. valve (option)	
	9	D8-			
	10	D9+		Motor CHP pressure control prop. valve	
	11	D9-			
	12	B18	+24 V input	Spare	
	13	B19	+24 V input	Function lock	
	14	B20	+24 V input	Charge signal	
	15	D12+		Third drum motor tilt control prop. valve (option)	
	16	D12-			
	17	GND	Battery (-)	Spare	
	18	B21	+24 V input	Inching selection	
	19	B22	+24 V input	Spare	
	20	B23	+24 V input	Spare	
	21	B24	+24 V input	Crane hook overhoist signal	
	22	B25	+24 V input	Jib hook overhoist signal	
	23	B26	+24 V input	Hook overhoist release signal	
	24	B27	+24 V input	Boom overhoist release signal	

Reference Only

Connector No.	Pin No.	Port name	Function	Specifications	Remarks
CN117	1	B28	D/O FB	Controller ID 1	
	2	B29	D/O FB	Controller ID 2	
	3	B30	+24 V input	Fr. drum hoist stop	
	4	B31	+24 V input	Fr. drum lower stop	
	5	B32	+24 V input	Re. drum (tower jib) hoist stop	
	6	B33	+24 V input	Re. drum (tower jib) lower stop	
	7	B34	D/O FB	Spare	
	8	B35	+24 V input	Jib overhoist signal	
	9	B36	Grounded input (3.3 KΩ) (and pulse input)	C/W detect 1	
	10	B37	Grounded input (3.3 KΩ) (and pulse input)	C/W detect 2	
	11	B38	+24 V input	Confluence/Independence selection solenoid (Fr.)	
	12	B39	+24 V input	Confluence/Independence selection solenoid (Re.)	
	13	B40	D/O FB	Oil cooler motor relay	
	14	B41	+24 V input	Third drum hoist stop	
	15	B42	+24 V input	Third drum lower stop	
	16	B43	+24 V input	Boom drum raise stop	
	17	B44	+24 V input	Boom drum lower stop	

Reference Only

Connector No.	Pin No.	Port name	Function	Specifications	Remarks
CN118	1	C1	Grounded output	Spare	
	2	C2	Grounded output	Spare	
	3	C3	Grounded output	Spare	
	4	C4	Grounded output	Spare	
	5	C5	Grounded output	Spare	
	6	B45	D/O FB	DPF load solenoid	
	7	B46	D/O FB	Spare	
	8	B47	D/O FB	Spare	
	9	B48	D/O FB	Spare	
	10	C6	Grounded output	Spare	
	11	C7	Grounded output	Spare	
	12	C8	Grounded output	Spare	
	13	C9	Grounded output	Spare	
	14	C10	Grounded output	Spare	
	15	B49	D/O FB	Spare	
	16	B50	D/O FB	Spare	
	17	B51	D/O FB	Spare	
	18	B52	D/O FB	Spare	
	19	B53	D/O FB	ML bypass (CR)	
	20	C11	Grounded output	Spare	
	21	C12	Grounded output	Spare	
	22	C13	PWM output	Spare	
	23	C14	PWM output	Spare	
	24	B54	D/O FB	ML bypass (JIB)	
	25	B55	D/O FB	Spare	
	26	B56	D/O FB	Spare	
	27	B57	D/O FB	Spare	
	28	B58	D/O FB	Spare	

Reference Only

Connector No.	Pin No.	Port name	Function	Specifications	Remarks
CN119	1	C15	+24 V output	Fr. drum motor boost SOL	
	2	C16	Grounded output	Oil cooler electric motor	
	3	C17	Grounded output	Confluence/Independence selection solenoid (Fr. drum)	
	4	C18	Grounded output	Confluence/Independence selection solenoid (Re. drum)	
	5	C19	Grounded output	DPF load solenoid	
	6	C20	Grounded output	Spare	
	7	C21	+24 V output	Re. drum motor boost SOL	
	8	C22	+24 V output	Third motor boost SOL (option)	
	9	C23	Grounded output	Spare	
	10	C24	Grounded output	Spare	
	11	C25	PWM output	Spare	
	12	C26	Grounded output	Fr. drum control signal	
	13	C27	Grounded output	Re. drum control signal	
	14	C28	Grounded output	Third drum control signal	
	15	C29	+24 V output	Fr. drum C/V-SOL	
	16	C30	+24 V output	Re. drum C/V-SOL	
	17	C31	Grounded output	Spare	
	18	C32	Grounded output	Spare	
	19	C33	Grounded output	Spare	
	20	C34	Grounded output	Spare	
	21	C35	Grounded output	Spare	
	22	C36	+24 V output	Third C/V-SOL (option)	

Reference Only

10.3.7 ADJUSTMENT OF MAIN CONTROLLER

1. Model number setting

   Perform this setting only when controller is replaced.
   If model setting is not properly done, machine does not work properly.
   Take extra care.

2. Press the MENU icon in the main screen.

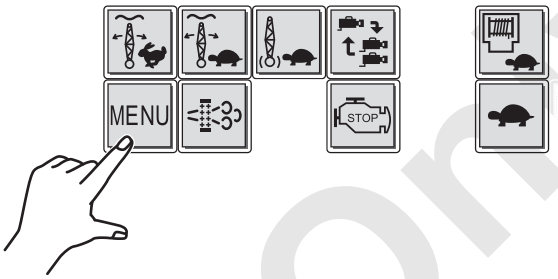

3. Press switch.

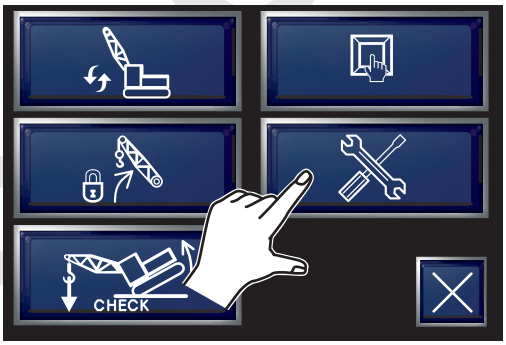

4. Input the password (8 digits) with the keyboard.

* In case of using capital letter, press CAPS switch.

CLR	All clear
DEL	One letter clear
BS	One letter clear and back

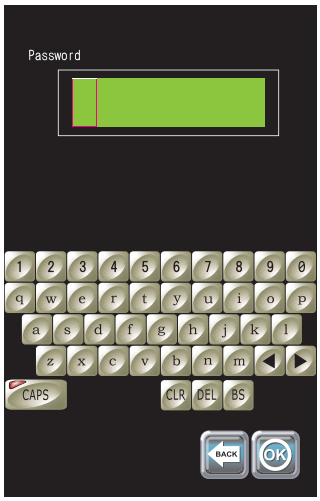

Reference Only

5. Press OK switch.

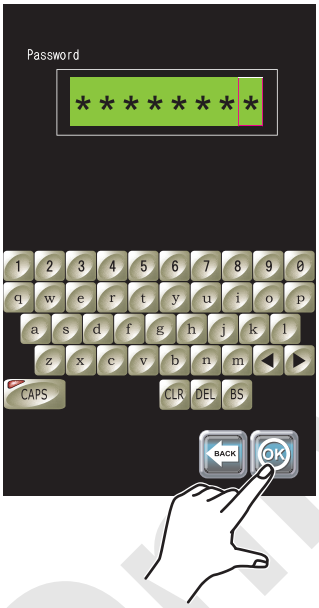

6. Press “ML ADJUSTMENT (TEMPORARY)”

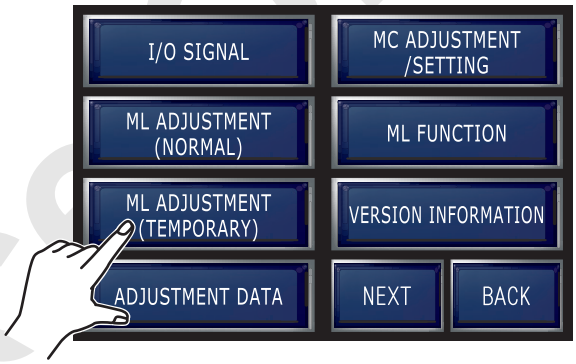

7. Press “ML ADJUSTMENT (TEMPORARY)”

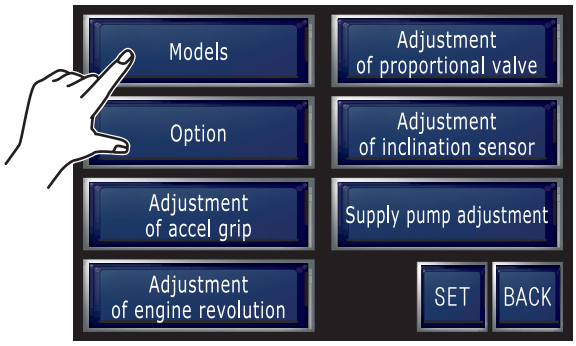

Reference Only

(1) Select the displayed model group.
(2) Press [OK] after model group is selected.
* Unless [OK] is pressed, selection becomes ineffective.

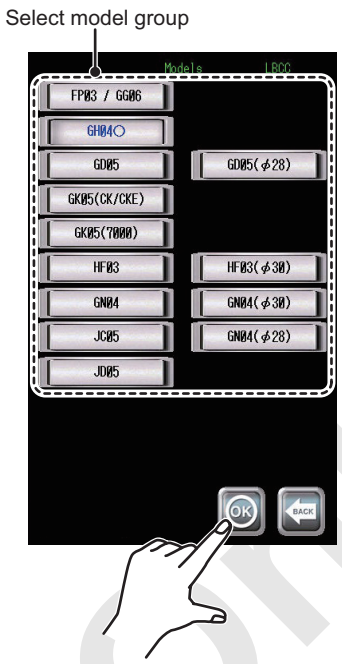

8. Option setting

(1) Turn the engine key “ON”.
(2) Select the screen as follows.
Main screen : [MENU] → [🔧] → “Password input” → “MC adjustment” → “Option setting”
(3) Select “O (YES)” or “X (NO)” on each function setting.
Use [⬇] [⬆] icon for page change.
(4) After setting is completed, press [OK] and after page is changed, press [SET] to record.
* Unless [SET] is pressed, selection becomes ineffective.

Reference Only

9. Adjustment of grip throttle and foot throttle.

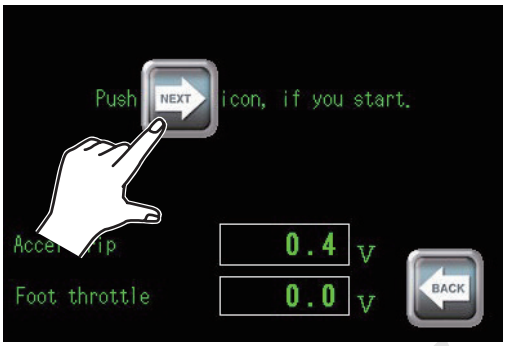

(1) Turn the engine key “ON”.
(2) Select the screen as follows.
Main screen : MENU → ✕ → “Password input” → “MC adjustment” → “Grip adjustment”
(3) The screen changes to adjustment screen.
Press adjustment start button NEXT.
(4) Throttle low adjustment.
Set the grip throttle and foot throttle to low idle position and in case of the joy-stick (10000E-1) to the neutral position.
(5) If OK, press button NEXT.
(6) Throttle high adjustment.
Set the grip throttle and foot throttle to high idle position and in case of the joy-stick (10000E-1) to the idle-up position.
(7) If OK, press button NEXT.
(8) If adjustment completion becomes displayed, press OK and press SET after screen has been changed to record.
* Unless SET is pressed, selection becomes ineffective.

10. Engine speed adjustment

Warm up the engine sufficiently before adjustment.

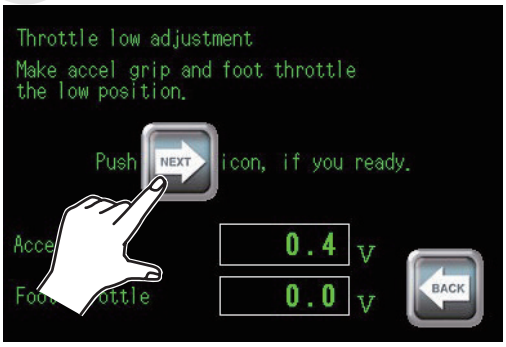

(1) Turn the engine key “ON”.
(2) Select the screen as follows.
Main screen : MENU → ✕ → “Password input” → “MC adjustment” → “Engine speed adjustment”
(3) The screen changes to adjustment screen.
Press adjustment start button NEXT.
(4) Engine speed is raised to high idle once and then gradually lowered to low idle.
(5) If adjustment completion becomes displayed, press OK and press SET after screen has been changed to record.
* Unless SET is pressed, selection becomes ineffective.

* If adjustment becomes NG,
NG 1 :
Engine speed is abnormal.
Check if engine error is output.
NG 2 :
Transmission is error.

Check if warning of CAN transmission abnormal is output.

Reference Only

11. Adjusting of inclination meter

Place the main machinery on the horizontal ground before adjustment using the level gauge etc.

(1) Turn the engine key “ON”.
(2) Select the screen as follows.
Main screen : MENU → 🔧 → “Password input” → “MC adjustment” → “Inclination meter adjustment”
(3) The screen changes to adjustment screen.
Press adjustment start button SET if OK.
(4) If adjustment completion becomes displayed, press OK and press SET after screen has been changed to record.
* Unless SET is pressed, selection becomes ineffective.

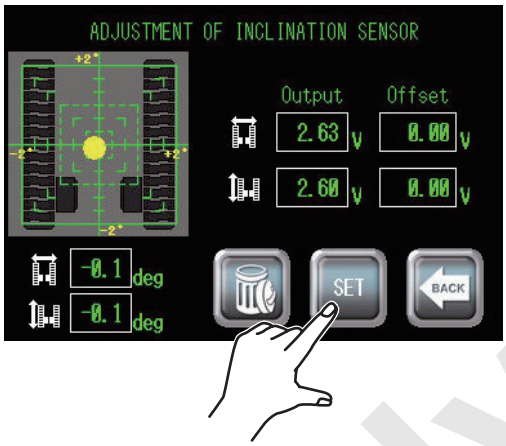

12. Supply pump adjustment

This adjustment is not normally used.
Perform this adjustment only when engine supply pump is replaced.
If this is used other than supply pump replacement, it would affect the engine performance.
Take extra care.

(1) After replacement of supply pump, start the engine and select the screen as follows.
Main screen : MENU → 🔧 → “Password input” → “MC adjustment” → “Pump learning function”
(2) Engine speed stays in low idle. Press ▶.
(3) Progress becomes displayed.
100% is reached after 5 minutes.

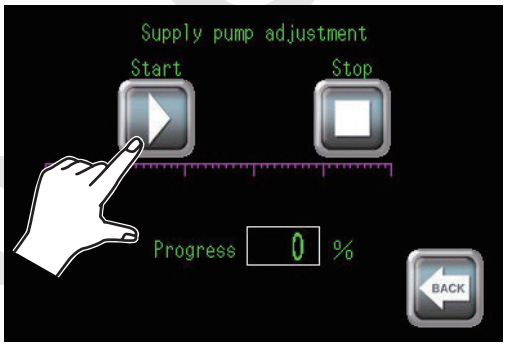

Reference Only

10.3.8 CONTROLLER MALFUNCTION EMERGENCY MEASURES

When the controller is malfunctioned, as an emergency measure, set the BYPASS switch for the main controller in the left side stand to the “bypass” position.
The crane operation becomes possible.
Automatic stop is actuated by the load safety device even when the BYPASS switch is actuated.
The variable speed function with the drum speed control knob is unavailable during the crane operation using the BYPASS switch.
Malfunction of the proportional valves (D5, D8, D9, D11, D12 in MC1 and D1 to D8 in MC2) will be displayed in the monitor display.
(excluding the case when H-1 is displayed)

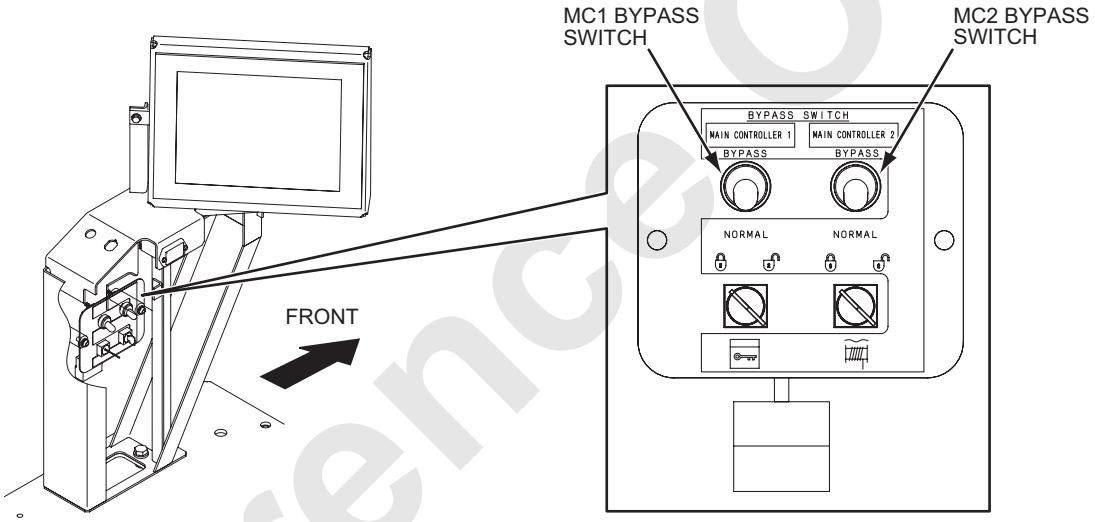

Reference Only

Reference Only

11. AIR CONDITIONER

11.1 NAME OF THE AIR CONDITIONER PARTS 11-1
11.2 ELECTRIC WIRING DIAGRAM 11-7
11.3 PARTS ILLUSTRATION 11-8
11.4 DISASSEMBLY AND ASSEMBLY OF THE UNIT 11-10
11.4.1 REMOVAL OF THE BLOWER UNIT 11-10
11.4.2 REPLACING THE BLOWER MOTOR 11-11
11.4.3 REPLACING THE BLOWER CONTROLLER 11-11
11.4.4 REMOVAL OF THE HEATER CORE 11-11
11.4.5 REMOVAL OF THE AIR CON. UNIT CASE-FRONT, REAR AND LOWER 11-12
11.4.6 REPLACING THE EVAPORATOR AND EXPANSION VALVE 11-13
11.4.7 INSTALLATION OF EVAPORATOR SENSOR 11-13
11.4.8 REPLACING THE MOTOR ACTUATOR 11-14
11.5 FAULT DETECTION FROM THE CONTROL PANEL INDICATION 11-15
11.5.1 GENERAL 11-15
11.5.2 FAULT IN THE INPUT AND OUTPUT CIRCUIT OF THE MOTOR ACTUATOR 11-15
11.5.3 FAULT IN THE THERMISTOR SENSOR CIRCUIT 11-16
11.6 BASIC SYSTEM OF HVAC 11-17
11.7 RECHARGING OF THE COOLANT 11-23
11.7.1 CAUTION AT WORK 11-23
11.7.2 WORK PROCEDURE 11-25
11.7.3 RECHARGING PROCEDURE 11-27
11.8 TROUBLESHOOTING 11-32

Reference Only

Reference Only

11. AIR CONDITIONER

11.1 NAME OF THE AIR CONDITIONER PARTS

NAME OF THE AIR CONDITIONER PARTS

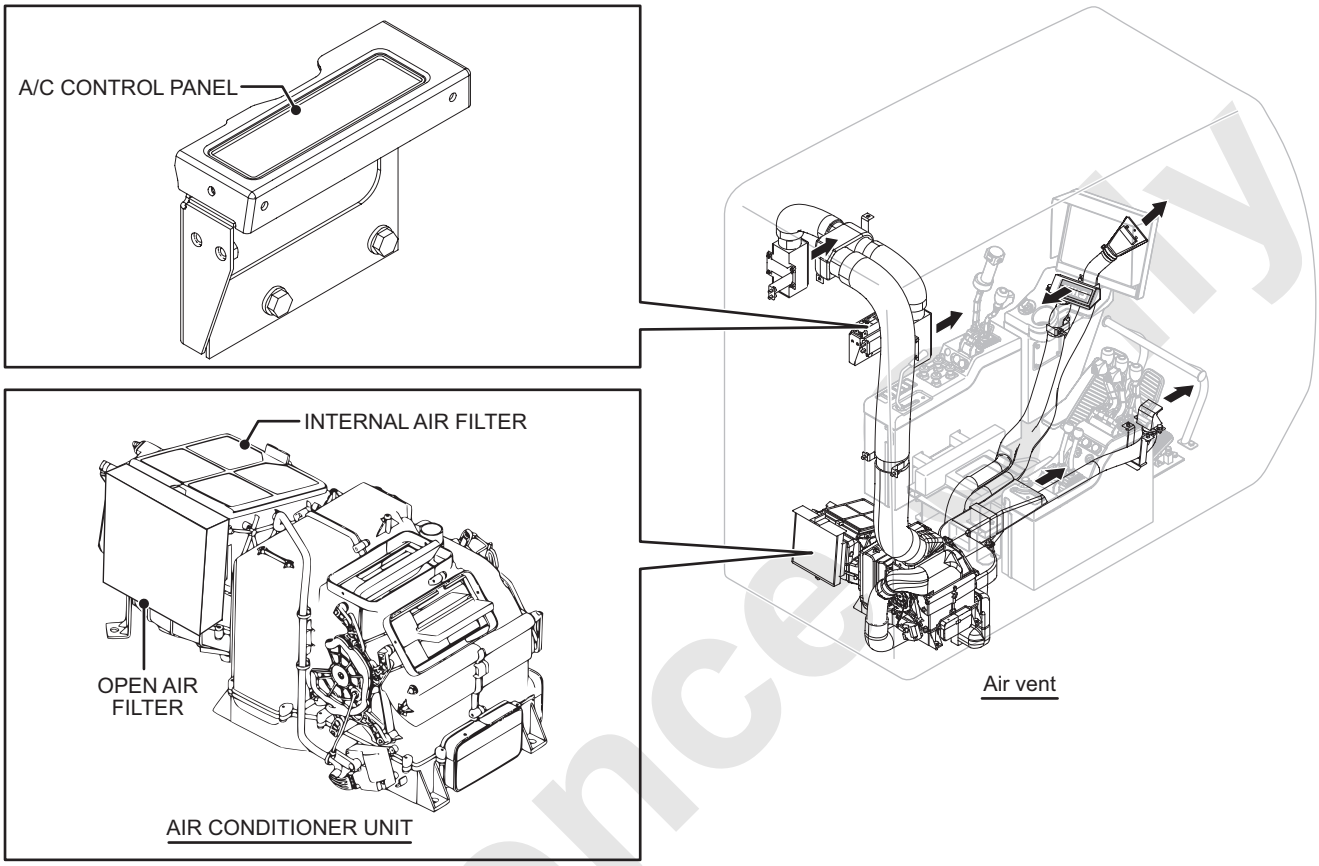

NAME OF THE CONTROL PANEL

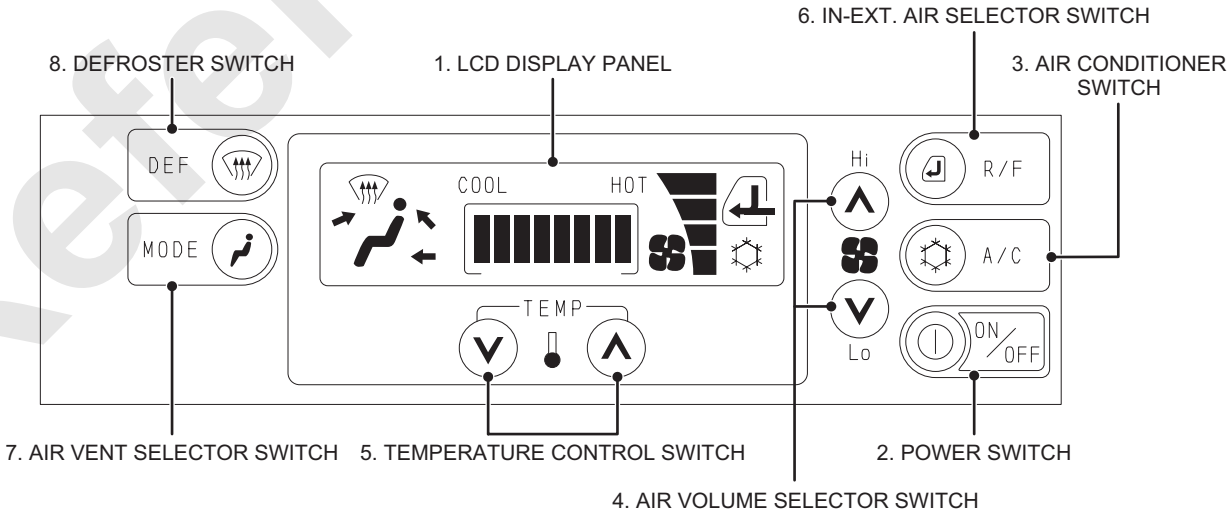

Reference only

FUNCTION OF EACH CONTROL

1. LCD DISPLAY PANEL

Air volume setting etc. are displayed.

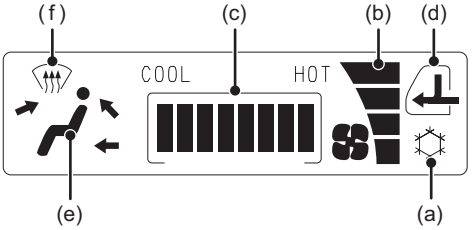

2. POWER SWITCH (ON/OFF SWITCH)

It turns ON or OFF the air conditioner.
When this switch is pushed at the first time, the air conditioner starts on factory set mode.
When this switch is pushed, air conditioner starts with previous set mode.

3. AIR CONDITIONER SWITCH (A/C SWITCH)

Every time when this switch is pushed, the air compressor alternates ON/OFF.
When the air conditioner is ON, ❄ lights up on the LCD display (a).

4. AIR VOLUME SELECTOR SWITCH (FAN SWITCH)

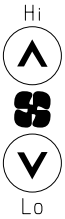

Air volume can be changed by pushing this switch when air conditioner is running.

⌃	Increase air volume.
⌄	Decrease air volume.

Set air volume is displayed on the LCD display (b).

LCD display				
Air volume	Low	Medium	High	Max. high

Reference Only

5. TEMPERATURE CONTROL SWITCH (AIR CONDITIONER TEMP. SET)

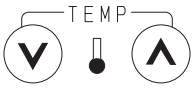

Pushing this switch changes temperature setting when the air conditioner is running.

⌃	Rises temperature (blowing air temp.)
⌄	Lowers temperature (blowing air temp.)

Set temperature COOL HOT is displayed on LCD display (c).

6. IN-EXT. AIR SELECTOR SWITCH (R/F SWITCH)

Every time when this switch is pushed, internal air / external air alternate.

	Internal air circulation
	External air take in

Setting is displayed on LCD display (d).

7. AIR VENT SELECTOR SWITCH (MODE SWITCH)

Every time when this switch is pushed, blow out opening changes on in sequence.

LCD display				
Blow out opening	Face	Vent	Bi level	Foot
Blow out direction	Front	Front/Upper rear	Front/Upper rear and foot	Foot※

* Air blows from defroster also.

Setting is displayed on LCD display (e).

8. DEFROSTER SWITCH (DEF SWITCH)

Every time when this switch is pushed, blow out opening changes to defroster.

Blow out opening	Defroster
Blow out direction	Front windscreen*

* Air blows from foot too.

is displayed on LCD display (f).

Reference Only

AIR CONDITIONER CONTROL

1. To start or stop air conditioner

   Push (Power switch).

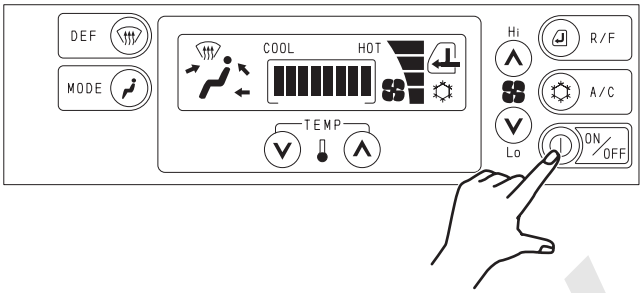

2. To cool

(1) Push (Air conditioner switch).
(2) Push (Temperature control switch) to indicate temperature display.
(3) Push the air volume selector switch for required air volume setting.
(4) Push (Air vent selector switch) for (Vent) position.
(The above is recommended position and can be chosen as desired.)
(5) By pushing (In-ext. air selector switch), set the selector to (Internal air circulation).
(The above is recommended position and can be chosen as desired.)
If the A/C cools down too low, adjust the temp. or air volume by (2), (3).

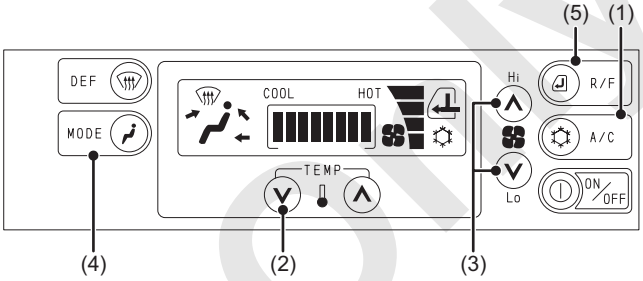

- (Air conditioner switch) is not pushed, the A/C does not cool but only air flows.
- While defrosting the windows, do not set the temperature too low.
- Cold air may make windows foggy from outside

Reference Only

3. To warm

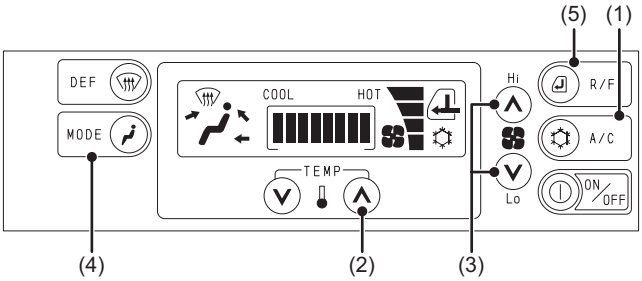

(1) Push A/C (Air conditioner switch).
(2) Push TEMP (Temperature control switch) to indicate COOL HOT temperature display.
(3) Push the air volume selector switch for required air volume setting.
(4) Push MODE (Air vent selector switch) for (Foot position.
(The above is recommended position and can be chosen as desired.)
(5) By pushing R/F (In-ext. air selector switch), set the selector to (Internal air circulation).
(The above is recommended position and can be chosen as desired.)
If the A/C warms up too high, adjust the temp. or air volume by (2), (3).

- If A/C (Air conditioner switch) is pushed, the A/C operates on dry air warming.
- If blow out opening is set to “Foot”, small amount for air bows from defroster also.

Reference Only

4. To defrost on the windows

(1) Push A/C (Air conditioner switch).
(2) Push TEMP (Temperature control switch) to indicate COOL HOT temperature display.
(3) Push the air volume selector switch for “Max, high” air volume.
(4) Push DEF (Defroster switch) to change the blow out opening to (Defroster) position.
(5) By pushing R/F (In-ext. air selector switch), set the selector to (Internal air circulation).

- By pushing MODE (Air vent selector switch) blow out opening return to previous one before DEF (Defroster switch) is pushed.
- When blow out opening is set to “Defroster”, small amount of air comes out from foot also.

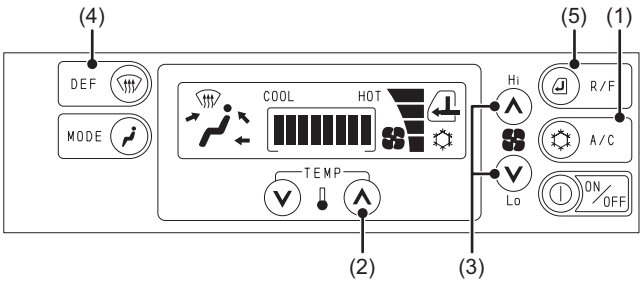

5. To defog on the windows

(1) Push A/C (Air conditioner switch).
(2) Push the air volume selector switch for required air volume setting.
(3) Push DEF (Defroster switch) to change the blow out opening to (Defroster) position.
(4) By pushing R/F (In-ext. air selector switch), set the selector to (External air take in).

- If quick defogging is required, set the air volume to “Max, high” by (2).
- By pushing MODE (Air vent selector switch) blow out opening return to previous one before DEF (Defroster switch) is pushed.
- When blow out opening is set to “Defroster”, small amount of air comes out from foot also.

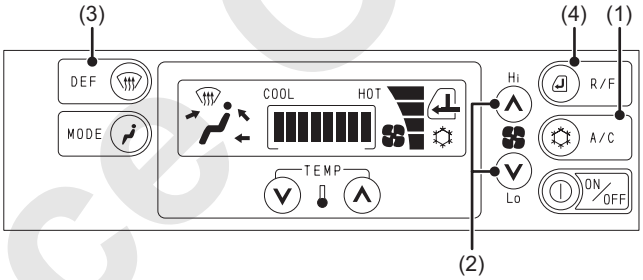

Reference Only

11.2 ELECTRIC WIRING DIAGRAM

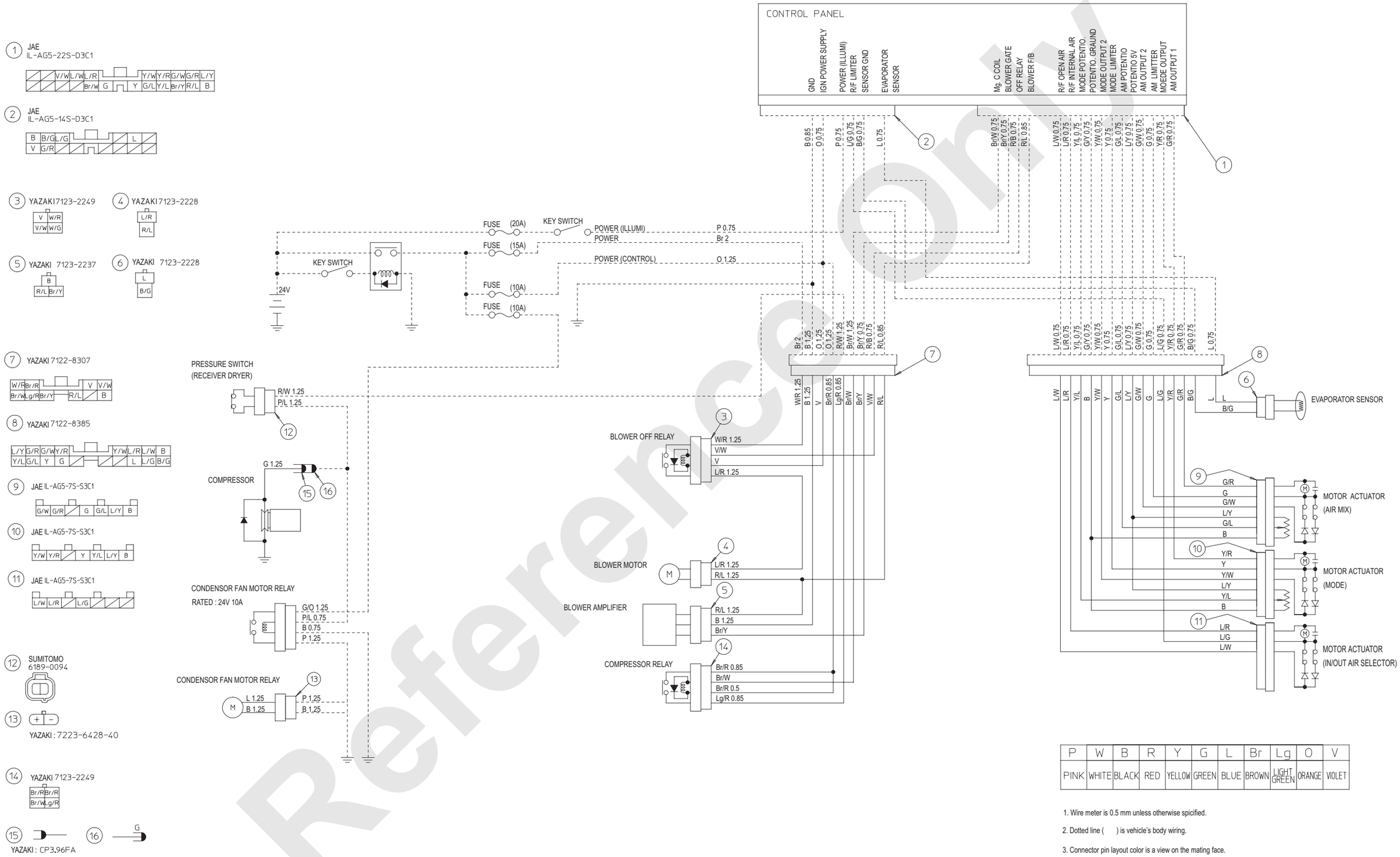

P	W	B	R	Y	G	L	Br	Lg	O	V
PINK	WHITE	BLACK	RED	YELLOW	GREEN	BLUE	BROWN	LIGHT GREEN	ORANGE	VIOLET

1. Wire meter is 0.5 mm unless otherwise spicified.
2. Dotted line ( ) is vehicle's body wiring.
3. Connector pin layout color is a view on the mating face.

Reference only

11.3 PARTS ILLUSTRATION

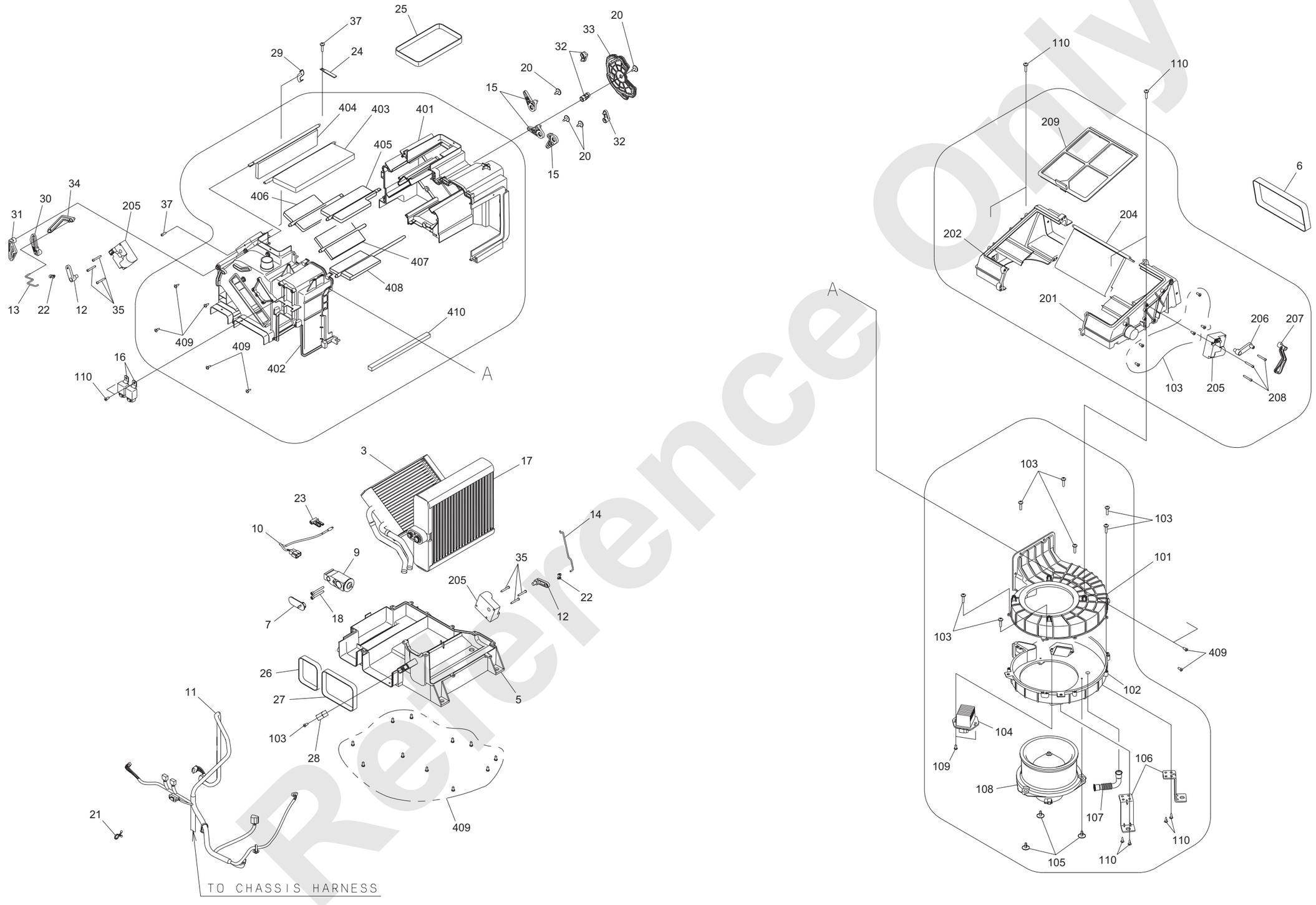

Reference Only

3. Heater core assy
5. Lower unit case
6. Out air intake packing
7. Expansion cover
9. Expansion valve
10. Thermistor
11. Unit harness assy
12. Lever (MAL1)
13. AM rod
14. Mode rod
15. Lever (MO2)
16. Relay
17. Evaporator
18. Hex. Socket head screw
20. Tapping screw
21. Cord clamp C
22. Rod holder
23. Sensor holder
24. Cord clamp A
25. Duct VE packing
26. Duct DE packing
27. Duct FO packing
28. Pipe clamp
29. Plate
30. Lever (AM)
31. Lever (CM)
32. Lever (MO1)
33. Mode cam
34. Rod AC
35. Tapping screw
37. Screw
101. Upper blower case
102. Lower blower case
103. Tapping screw
104. Fan driver
105. Tapping screw
106. Unit bracket
107. Unit cooling hose
108. Blower motor (24V)
109. Tapping screw
110. Tapping screw
201. Intake case (right)
202. Intake case (left)
204. Damper (IN) assy
205. Actuator
206. Lever (MAL2)
207. Lever (IN)
208. Tapping screw
209. Internal air filter
401. Rear unit case
402. Front unit case
403. Damper AM assy
404. Damper CM assy
405. Damper VE assy
406. Damper FA assy
407. Damper DE assy
408. Damper FO assy
409. Tapping screw
410. Evaporator F packing

Reference Only

11.4 DISASSEMBLY AND ASSEMBLY OF THE UNIT

11.4.1 REMOVAL OF THE BLOWER UNIT

1. Remove the various connectors attached to the in-out air motor actuator, blower motor, blower controller, evaporator sensor and harnesses attached to the blower case.

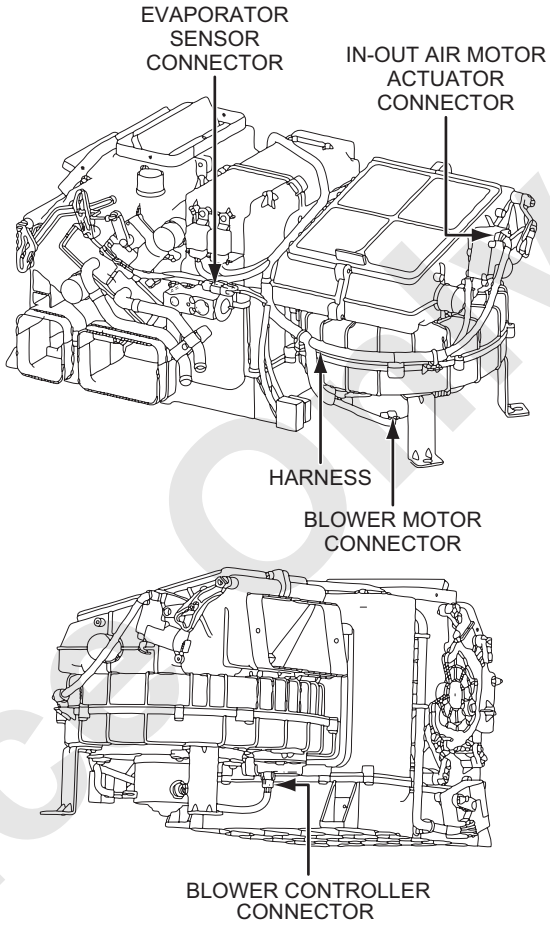

2. Pull out the in air filter from the intake case. Remove four of the cross head screw (Phillips) T4 × 14 (T1) from the intake case and remove the intake duct.

3. Remove four of the cross head screw (Phillips) T5 × 14 (T1) and the remove intake case.

4. Remove three of the cross head screw (Phillips) T5 × 14 (T1) and separate the blower case and the air con. unit.

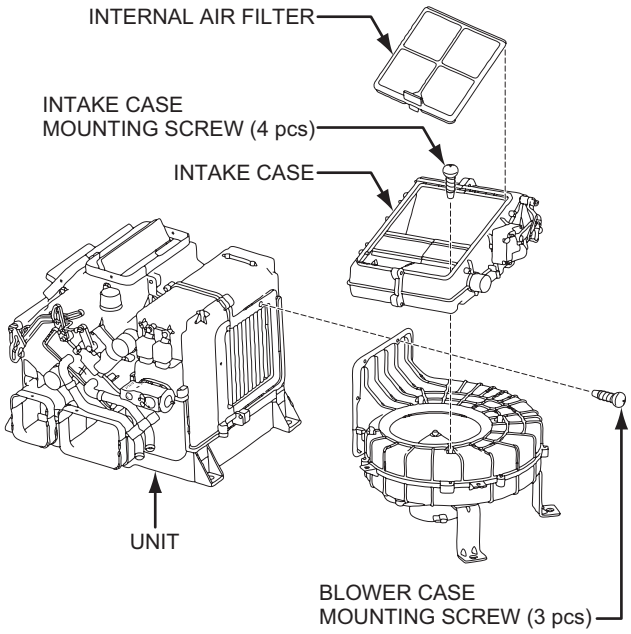

Reference Only

11.4.2 REPLACING THE BLOWER MOTOR

1. Remove the coolant hose coolant between the blower motor and the blower case.

2. Remove three of the cross head screw (Phillips) N5 × 16 (W) which are tightened from under the blower unit case and pull the blower unit out.

3. Take the reverse way in the foregoing procedure for installation.

* Do not remove the fan from the blower motor.

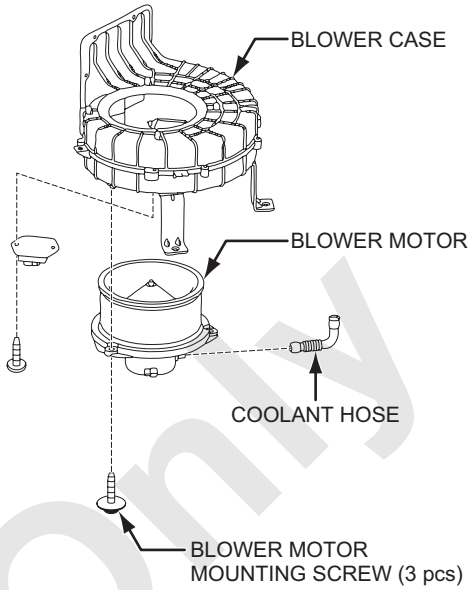

11.4.3 REPLACING THE BLOWER CONTROLLER

1. Remove two of the cross head screw (Phillips) T4 × 14 (T1) which are tightened from under the blower case and pull the blower controller out.

2. Installation of the new blower controller is in the reverse way of the foregoing procedure.

* NEVER disassemble the blower controller.

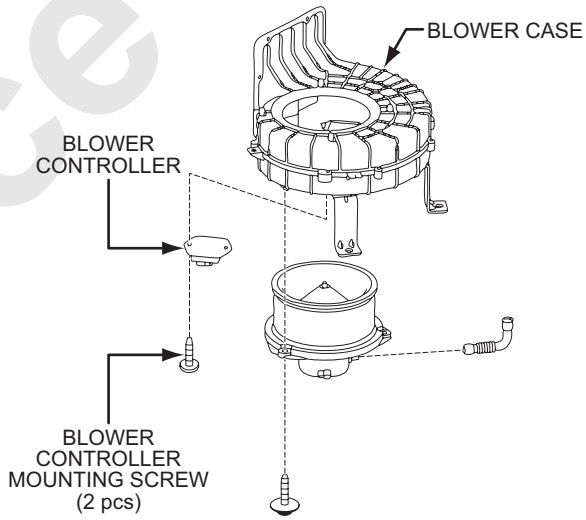

11.4.4 REMOVAL OF THE HEATER CORE

1. Drain out the cooling water.

2. Remove one of the cross head screw (Phillips) N5 × 16 (T2) and pipe clamp which secure the heater core to the unit.
   Then pull out the heater core from the unit.

3. Installation is reverse way of the foregoing procedure.

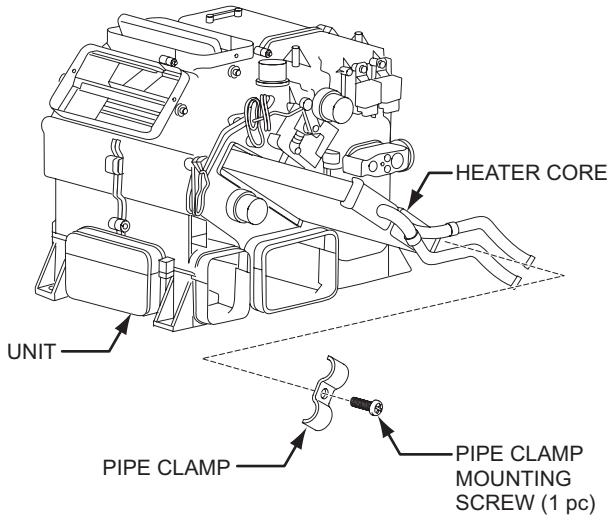

Reference Only

11.4.5 REMOVAL OF THE AIR CON. UNIT CASE-FRONT, REAR AND LOWER

1. Remove the connectors for mode motor actuator and the evaporator sensor.

2. Remove the mode rod from the rod holder which is installed on the lever MAL1 of the mode motor actuator.

3. Remove three screws N4 × 30 (T1) and remove the mode motor actuator installed on the unit case- lower and the unit case-rear.

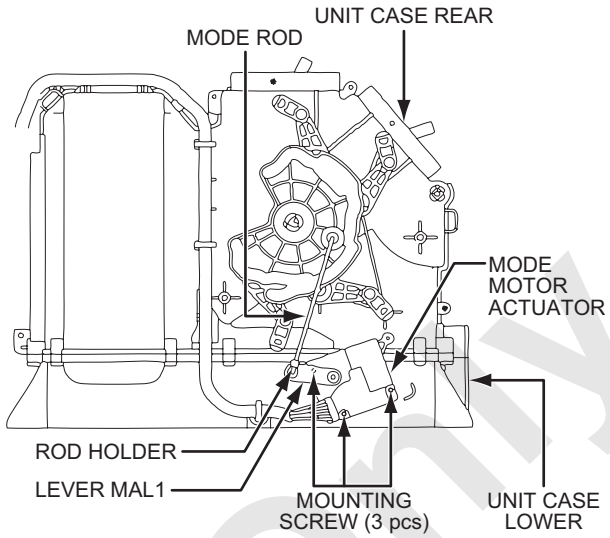

4. Remove eleven of the cross head screw (Phillips) N5 × 16 (T2) and remove the unit case-lower and the unit case-front.
   Pull the unit case upward taking care of evaporator sensor cord not to catch the case.

* In this case make sure that the heater core is removed from the unit case.

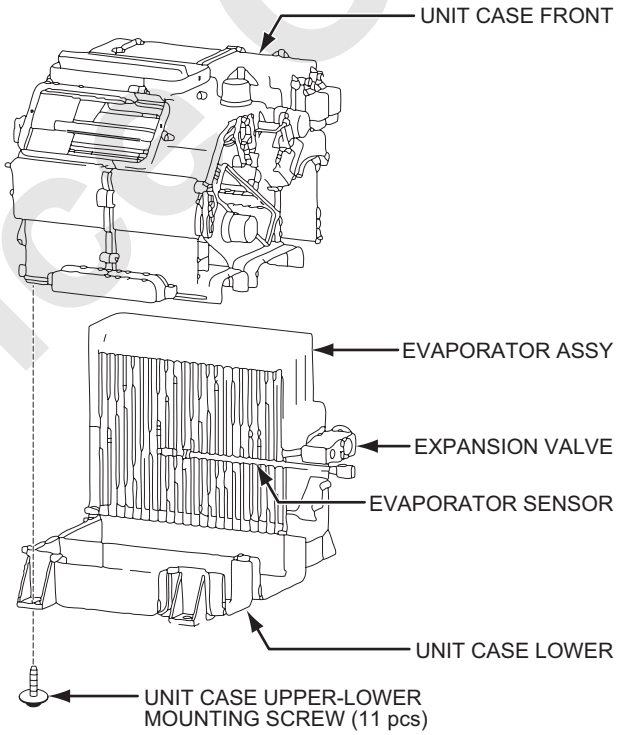

Reference Only

11.4.6 REPLACING THE EVAPORATOR AND EXPANSION VALVE

1. Pull out the evaporator assy from the case-lower with the case insulation material and the expansion valve attached.

2. After the evaporator assy is removed, then pull out the evaporator sensor and sensor holder as one piece.

3. Remove the HEX. socket head screw M5 × 40 (two) and remove the expansion valve from the evaporator with the hex. wrench (4 mm [0.16 in.]).

4. Install the O-ring (NFO ring 5/8 and 1/2, one each) to the new evaporator.
   (Tightening torque 6.9 N·m [5.09 ft·lbs])

* Be careful not to make the O-ring jammed during the expansion valve installation.

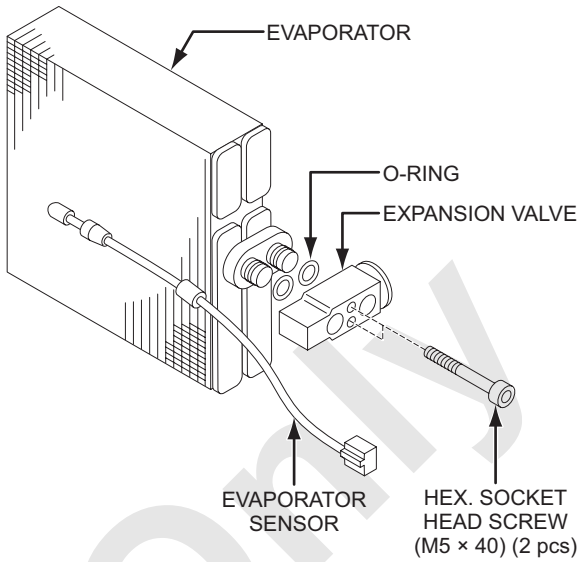

11.4.7 INSTALLATION OF EVAPORATOR SENSOR

Install the evaporator sensor precisely to the original place of the evaporator as shown.

* During the installation work, take care not to make the sensor cord jammed with the case.

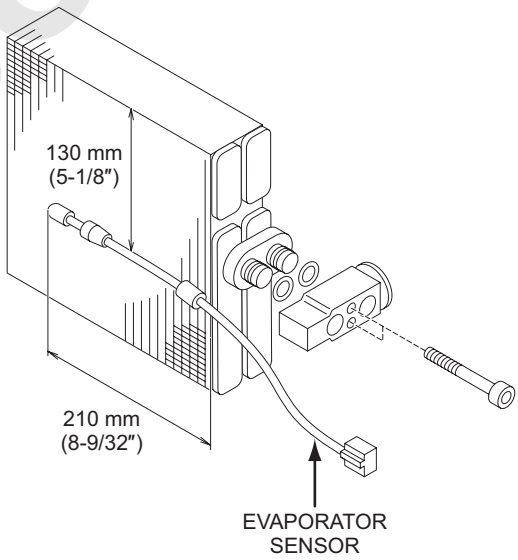

Reference Only

11.4.8 REPLACING THE MOTOR ACTUATOR

1. Replacing the mode motor actuator

   Remove the connector of the motor actuator.
   Remove the mode rod which connects the motor actuator and the mode cam from the rod holder.
   Remove three of the cross head screw (Phillips) N4 × 30 (T1) which hold the motor actuator and remove the motor actuator from the unit while the rod holder and lever MAL1 are attached to the motor actuator.
   Remove the rod holder and the lever MAL1 from the motor actuator and install the new actuator in the reverse way of this procedure.

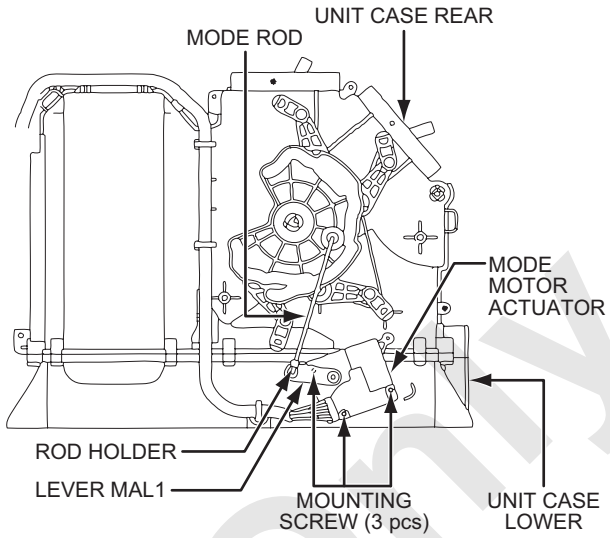

2. Replacing the air mix motor actuator

   Remove the connector connected to the motor actuator.
   Remove the AM rod which connect the motor actuator and the lever AM1 from the rod holder.
   Remove the three of the cross head screw (Phillips) N4 × 30 (T1) holding the motor actuator.
   Remove the motor actuator from the unit while the rod holder and lever MAL1 are attached.
   Remove the rod holder and lever MAL1 from the motor actuator.
   Install the new motor actuator to the unit in the reverse way of the foregoing procedure.

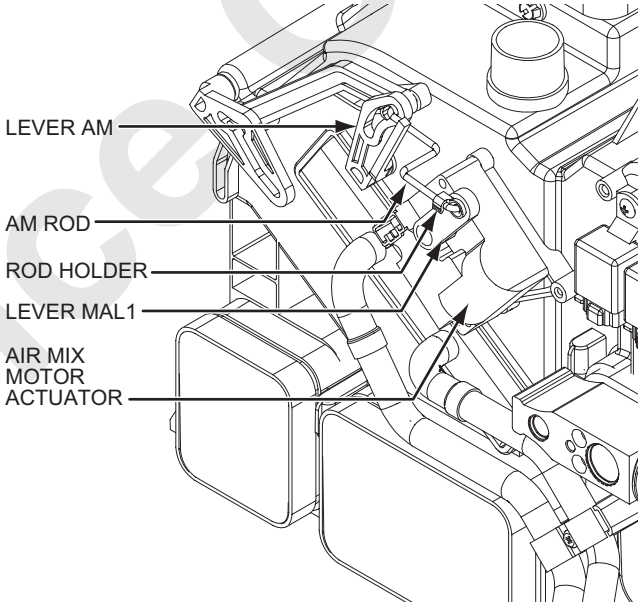

3. Replacing the in-out air motor actuator

   Remove the connector connected to the motor actuator.
   Remove three of the cross head screw (Phillips) N4 × 28 (T1) holding the motor actuator.
   Remove the motor actuator from the unit while the lever MAL2 is attached.
   Remove the lever MAL2 from the motor actuator.
   Install the new motor actuator in the reverse way of the foregoing procedure.

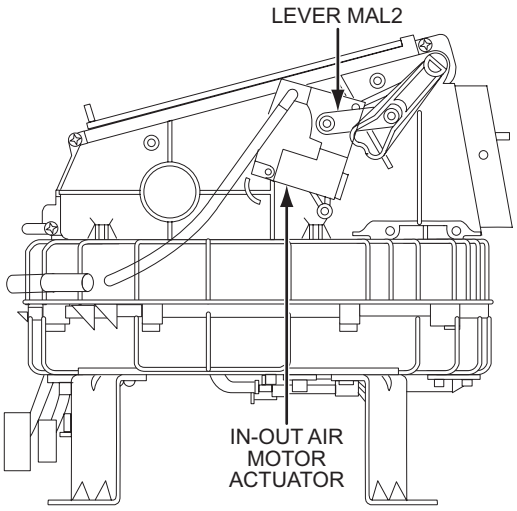

Reference Only

11.5 FAULT DETECTION FROM THE CONTROL PANEL INDICATION

11.5.1 GENERAL

When there is any fault in each sensor input circuit of the controller or the motor actuator drive line, fault detection is indicated.

⚠ CAUTION

Once the fault is detected, fault indication is not reset even the fault is recovers to normal condition. In case the fault recovers to normal, the fault indication can be reset by power off the base machine with engine key.

11.5.2 FAULT IN THE INPUT AND OUTPUT CIRCUIT OF THE MOTOR ACTUATOR

1. Open circuit detection

   If there is an open circuit or short circuit in the motor actuator line, open circuit detection is indicated.

Open circuit detect indication

Fault location	Fault indication
Air mix (Temperature control)	HOT mark blinking

2. Motor lock detection

   If the motor rotating angle does not reach the target, considered as LOCKED and motor output is ceased and motor lock detection is indicated.

Motor lock detect indication

Fault location	Fault indication
Air mix (Temperature control)	HOT mark blinking
In-out air motor actuator	In-out air mark blinking

Reference Only

11.5.3 FAULT IN THE THERMISTOR SENSOR CIRCUIT

1. Open or short circuit

   Open circuit detect is indicated when there is an open or short circuit in the sensor line.

Open circuit detect indication

Fault location	Fault indication
Evaporator sensor	A/C mark blinking

Reference Only

11.6 BASIC SYSTEM OF HVAC

This is the built in type air con. unit with evaporator, heater core and blower as one package and generate cool and warm air.

1. Air cycle

- Heater
  The unit takes internal air of the cab or open air from the intake port and have them passed through the air filter and send them to the heater core of the air conditioner unit to exchange heat and send the warm air through the duct and blow out from the grill.

- Cooler
  The unit takes internal air of the cab or open air from the intake port and have it passed through the air filter and send them to the evaporator to exchange the heat (dehumidifying cool) and send the cooled air to the duct and blow out the air from the grill.

- Heater system
  The heater unit circulates the engine cooling water. The warm water from the engine is sent to the heater core to exchange heat.
  Air sucked in is warmed up and is blown out from the grill inside of the cab.
  Temperature of the blow air can be adjusted by temperature adjusting switch.
  This air movement is controlled by the air mix damper of the air conditioner unit.

2. Control panel and control unit

   The control panel and the control unit is one package.
   Micro computer inside of the unit handles the arithmetic processing of input signal from each sensor with the input signal of each switch in the control panel and totally controls the fan motor and compressor and each actuator in the output side of the actuator (in-out blow port selector, air mix).
   The unit also has self diagnose function and can perform self diagnose easily.
   (For detail refer to the control specification)

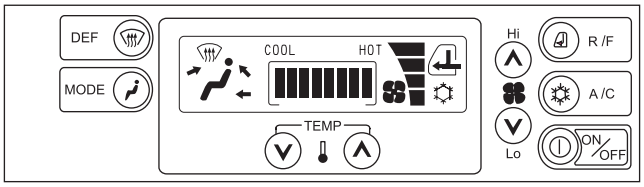

Reference Only

3. Fan driver (blower amplifier)

The fan driver receives the control signal from the control unit and control the fan motor speed.

Normal condition

	Terminal no.			Continuity
	1	2	3	
Tester	⊕		⊖	Yes (4.7 k Ω ± 5 %)
	⊖	⊕		No
	⊕	⊖		Yes (Diode parallel forward direction)

(1) Remove the connector of the blower amplifier.
(2) Check the continuity between each terminal of the blower amplifier.

* The amplifier is located in the left hand of the air conditioner unit.

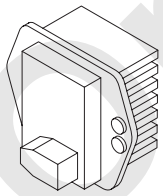

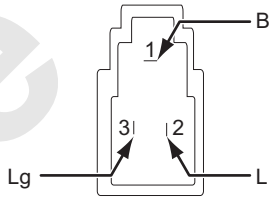

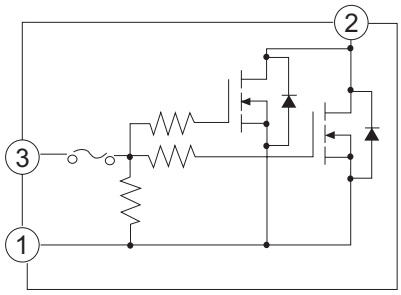

Reference Only

4. Relay

The blower OFF relay and the compressor relay are four pole relay.

(1) Blower off relay
The blower OFF relay turns ON when the signal from the control amplifier is received.
When the blower OFF relay turns ON, power is supplied to the blower motor and the blower motor starts.

(2) Compressor relay
This relay turns ON-OFF by the compressor control of the control amplifier.

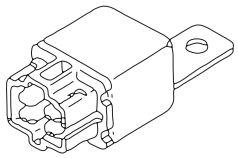

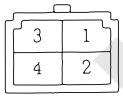

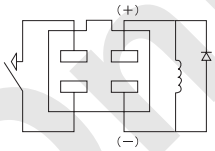

Inspection points of the relay

Identification	Check Method
Relay	
Coil resistance	320 Ω
Voltage*1	DC20 V to 30 V
Inspection	between the terminal 3 to 4 under the following condition.*2

*1 Note : This relay coil has a polarity.
*2 Inspection : Check the continuity.
Apply 20 to 30 V between the terminal 1 and 2 : Continuity should be YES
Apply no voltage between the terminal 1 and 2 : Continuity should be NO

Reference Only

5. Air mix actuator

The air mix actuator is installed in the center of the air conditioner unit and controls OPEN/ CLOSE of the air mix damper.
The air mix actuator has the potentiometer in its inside to be controller by the actuator shaft movement.
When the target position of the air mix door is decided by the temperature control switch, the control system reads the potentiometer indication of the actuator and decides the direction of motor rotation.
The contact moves together with the motor and comes to separate its contact point or reaches to the target position of the potentiometer indication to make output signal OFF from the control unit. Then the motor stops.
(Refer to the inspection of the air mix motor actuator.)

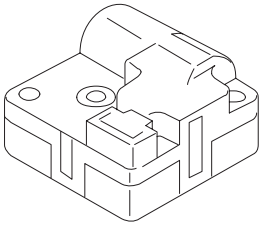

6. In-out air actuator

In-out air actuator is installed in the blower intake unit and opens or closes the in-out air damper through the linkage.
In-out air actuator has the position detect switch in its inside which is controlled by the shaft movement of the actuator.
When the target location of the in-out air damper is decided by the in-out air selector switch of the control unit, the control system reads the potentiometer indication of the actuator and decides the direction of motor rotation.
The contact moves together with motor and stops the motor by reaching to the target position.
(Refer to inspection of the In-out motor actuator.)

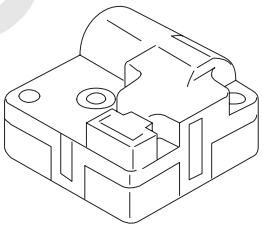

Reference Only

7. Blow out mode actuator

The blow out mode actuator is installed in the back side of the air conditioner unit and opens or closes the blow out damper through the linkage.
The bow out mode actuator has the potentiometer in its inside which is controlled by the shaft movement of the actuator.
When the target position of the blow out mode is decided by the temperature control switch, the control system reads the potentiometer indication of the actuator and decides the direction of motor rotation.
The contact moves together with the motor and comes to separate its contact point or reaches to the target position of the potentiometer indication to make output signal OFF from the control unit. Then the motor stops.
(Refer to the inspection of the motor actuator.)

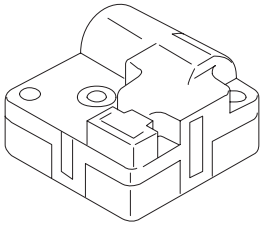

8. Evaporator sensor

This sensor controls ON-OFF of the compressor by detecting the temperature of the bow out air of the evaporator to prevent it from freezing.

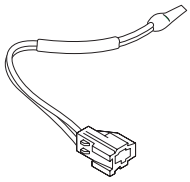

- Inspection Of The Evaporator
  (Specification data)
  Remove the evaporator sensor connector from the main harness and measure the resistance value between the terminals to the sensor with the multi-tester.

Resistance value between terminal to the sensor

When the sensor detect temp. is 0°C	7.2k Ω
When the sensor detect temp. is 25°C	2.2k Ω

Reference Only

9. Dual pressure switch

The dual pressure switch is installed in the receiver dryer and protect the cooling cycle by opening its contact and cutting the power supply to the compressor when the high pressure side of cooling becomes malfunction (high pressure faulty, low pressure faulty).

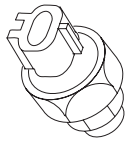

- Simple Inspection Of Dual Pressure Switch

(1) Disconnect the connector from the switch when the cooling cycle is stopped and check the continuity between the terminal to the switch and to the connector with the multi-tester.
If the continuity is YES, then it is normal.
(When the ambient temperature is above 0°C)

(2) Connect the high pressure side hose of the gauge manifold to the high pressure side charge port and raise the high side pressure when the cooling cycle is operating.
Cover the front face of the condenser with some board or such during this work.
If the compressor stops at 3.14 MPa or around then the system if normal.

(3) Check the continuity between the terminal to the switch and to the connector when the coolant is removed.
If continuity is NO, the system is normal.

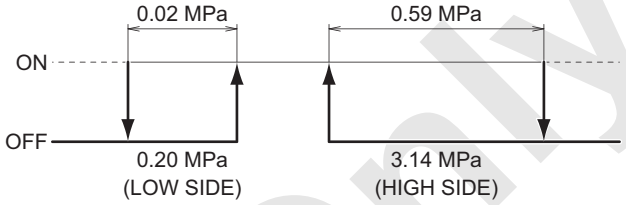

Spec. of dual pressure switch

Reference Only

11.7 RECHARGING OF THE COOLANT

11.7.1 CAUTION AT WORK

Make sure that the work is done by the specialist.
Recharging work consist of high pressure gas handling.
Make sure that the work is done with the specialist who is familiar with the work.

WARNING

- **Make sure to wear the safety goggles when charging.**
  (If the refrigerant gets into eye may cause the loss of eyesight.)
- **Extreme care to handle the liquid refrigerant due to it is extreme low temperature (-26 C°).**
  (If they touch the skin, it may cause the frostbite.)

1. Storage and transport

(1) Store the service bottle (Hereafter called bottle) in the temperature below 40°C.
High pressure gas “R134a” is contained inside the bottle in the saturated liquid form. Rapid rise of the temperature may cause burst of the bottle and is very dangerous.
Therefore it is NECESSARY to store the bottle in the cold place under minus 40°C temperature.

(2) Prevent direct sunlight to the bottle and store them in the cool and dark place.

(3) If the bottle is placed close to the fire, it may raise the temperature due to the heat radiation and may cause to raise the inside pressure and virtually may cause burst of the bottle. Never place the bottle close to the fire.

(4) Temperature on the closed operator’s room will be risen quickly to the dangerous range even at the winter time when the radiant heat from the sun strikes it.
Do not take the bottle into the closed operator’s room even at the winder time.
Temperature in the storage box also rises to dangerous range at summer time.
Be careful on this point.

Reference Only

(5) Flaw, indent mark or deformation may decrease the strength of the bottle.
Be careful on this point.

(A) Do not drop or hit the bottle.
(B) Take care in loading, transporting and unloading the bottles or packing case containing the bottles.
Handle with care and do not drop or throw them.
(C) Do not store the bottle within the reach of the children.

2. At the recharging time

(1) When the bottle is to be warmed up for recharging, make sure to open the bottle valve, the low pressure side gauge manifold and then warm up the bottle with warm water of about 40°C temperature (Below hand hot temperature!).
Do not put the bottle into the hot water or heat up with direct fire.
Otherwise the pressure may go up quickly and may burst the bottle.
(2) When the engine is started to recharge the bottle with the coolant, NEVER open the high pressure valve (HI) of the gauge manifold.
Opening the high pressure valve may cause the high pressure gas to backflow and may cause to burst the bottle or the charging hose and is very dangerous.

3. Others

(1) Reuse of the recharge bottle is prohibited by law. NEVER reuse.
(2) Do not put any foreign material into the air conditioner piping.
(3) Cooling cycle hates air, water and dust.
Assembling work of the air conditioner must be done quickly and take extra care to prevent water, dust entering into the system.

⚠ CAUTION

Pay attention not to overcharge.
Tighten all the pipe fittings with the specified torque.

Reference Only

11.7.2 WORK PROCEDURE

1. Recharging work of the coolant into the air conditioner is divided into “Vacuuming work” and “Gas recharging work”.

(1) “Vacuuming work” is to remove the water in the air conditioner piping completely.
Even a slight amount of water is left in the piping, it will be frozen in the small holes in the expansion valve during the operation and may cause piping clogged or rust inside the piping or other trouble.
In order to avoid these troubles the vacuuming work must be done to boil off the water in the piping prior to recharge the coolant into the piping.

(2) “Gas recharging work” is to recharge the system with the coolant after the vacuuming work is completed.
Gas recharging work is the main work and affects not only the cooling performance of the air conditioner but also to the life of the circuit.
Extreme over charging may cause abnormal high pressure in the system and may lower the cooling performance.
On the other hand, extreme low amount of the coolant may cause poor circulation of the lubricant to the compressor and may virtually cause seizure on the sliding area.
Gas recharging work also handle the high pressure gas and wrong handling is very dangerous.
Carry out the coolant recharging by exactly following the procedure mentioned in this manual.

2. Work chart

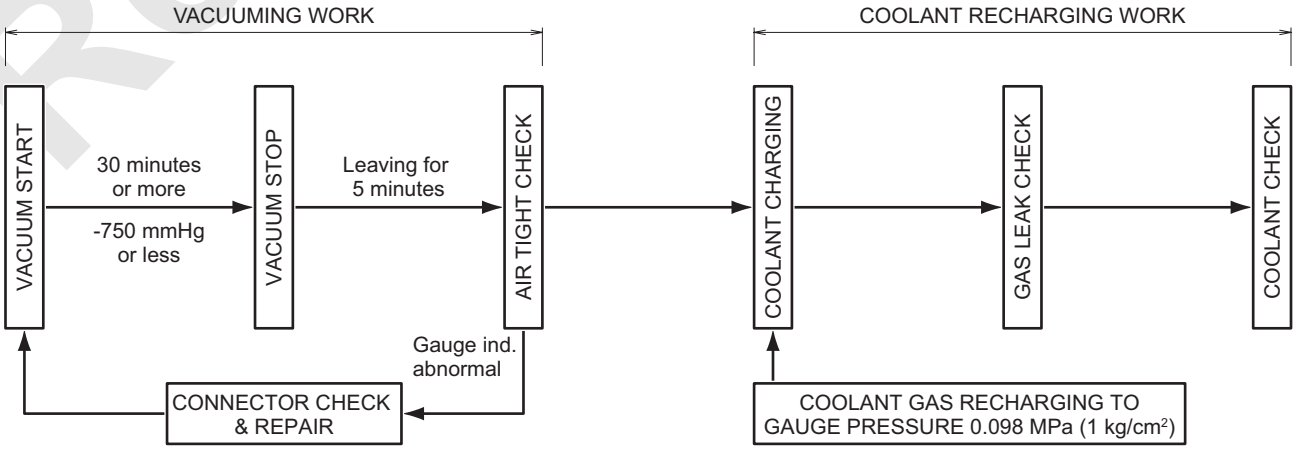

Reference Only

3. Tool

Name	Shape	Quantity	Use
Gauge manifold	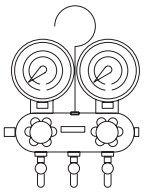	1	
Charging hose	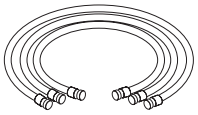	3	Red : High pressure side Blue : Low pressure side Yellow : Vacuum pump side
Quick joint	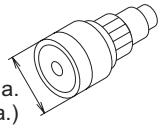	1	
Quick joint	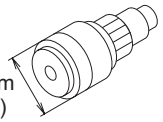	1	Low pressure side
T-Joint	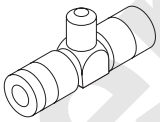	1	Service bottle valve
Service bottle valve	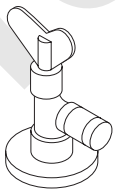	2	For service bottle
Vacuum pump adapter	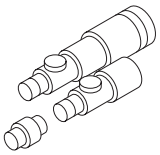	1	For vacuum pump

Reference Only

11.7.3 RECHARGING PROCEDURE

VACUUMING WORK

1. Connection of gauge manifold

(1) Close the high pressure valve (HI) and low pressure valve (LO) of the gauge manifold.
(2) Connect the charging hose (Red and Blue) to the service valve of the compressor.

- Red hose
  High pressure side of the gauge manifold (HI)→High pressure side of the compressor (DIS)

- Blue hose
  Low pressure side of gauge manifold (LO)→Low pressure side of the compressor (SUC)

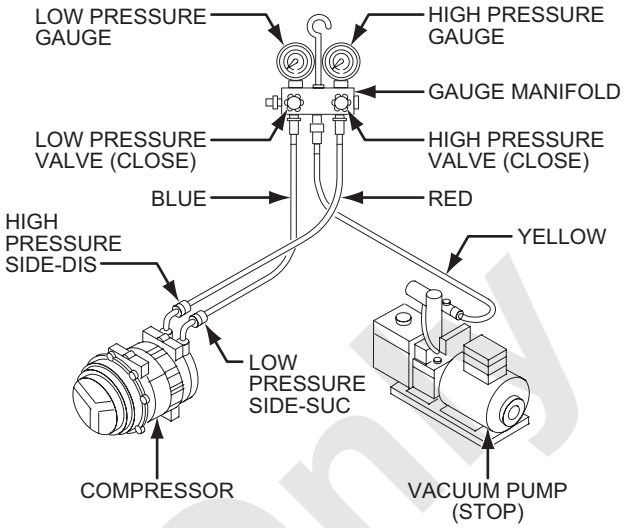

Gauge manifold connection

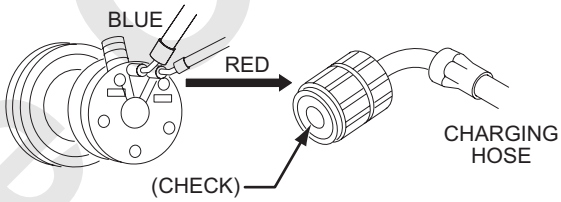

Compressor piping connection

⚠ CAUTION

Do not mix the high pressure side and low pressure side connection.
Push the hose firmly until "the click" sounds.
Connect the charging hose with "L" shaped end to the service valve of the compressor.
The "L" shaped end has a check valve.
If connected in reverse way, check valve of the compressor will not open.

(3) Connect the center valve of the gauge manifold and the vacuum pump with the charging hose.

Note

Some type of the gauge manifold does not have the open/close valve in their center.

Reference Only

2. Vacuuming

(1) Open the high pressure valve (HI) and low pressure valve (LO) of the gauge manifold.
(2) Turn ON the switch of the vacuum pump and continue vacuuming work for more that 30 minutes.
(3) When the vacuuming for the specified time is completed (Target figure of vacuum : -750 mgHg or lower), close the high pressure valve and the lower pressure valve.
(4) Then turn off the switch of the vacuum pump.

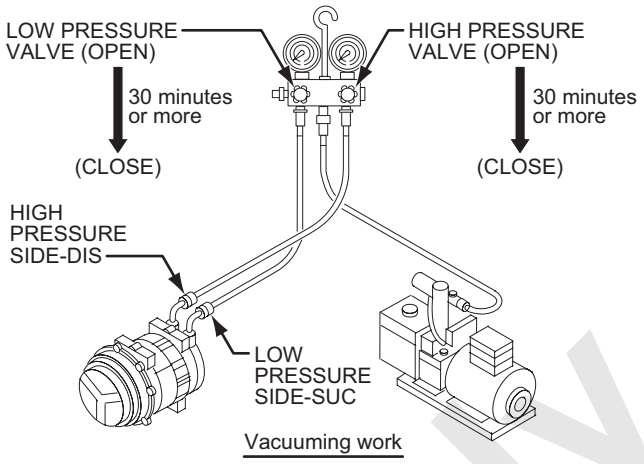

Vacuuming work

3. Airtight check

Watch the gauge for more than five minutes while the high pressure valve and the lower pressure valve are closed and confirm that the gauge needle does not move back toward zero direction.

⚠ CAUTION

If the gauge moves back toward zero direction, there must be leaking point somewhere.
Retighten all of pipe fittings and again repeat the vacuuming work and check for leak again.

Reference Only

GAS RECHARGING WORK

1. Recharge from the high pressure side

(1) Disconnect the charging hose (yellow) of the gauge manifold from the vacuum pump and reconnect it to the service bottle after the vacuum pump is completed.

(2) AIR PURGE
Open the service bottle valve. (High pressure side and low pressure side valves must be closed.)
Then push the check valve in the service port of the lower pressure side on the gauge manifold with a screw driver or such to purge the air in the charging hose by the coolant pressure.
(If the air sound “shoo!” comes out, it is completed.)

(3) Open the high pressure valve of the gauge manifold and charge the coolant.
(Charge the coolant gas to 0.098 MPa [1 kgf/cm^2] in gauge reading.)
After charging close the high pressure valve in the gauge manifold and the service bottle valve.

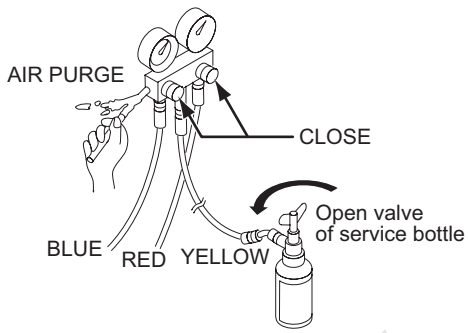

Gas charging work

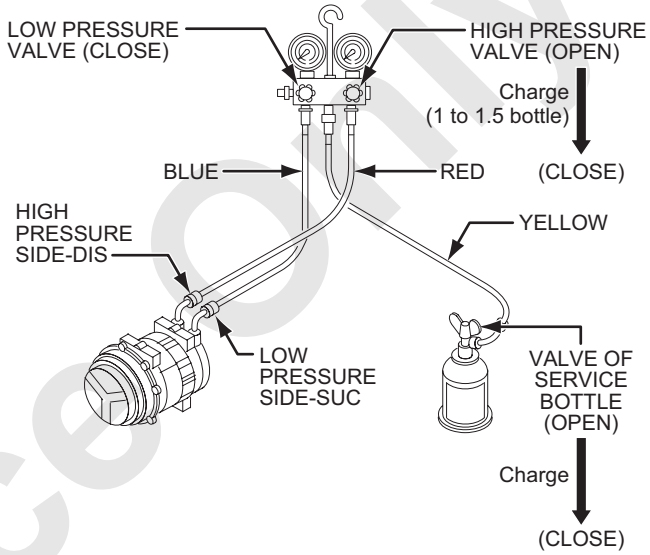

Gas charging work (high pressure side)

CAUTION

Never run the compressor.
(The coolant will flow back and the service bottle or the hose may burst and is very dangerous.)

2. Gas leaking check

Check gas leak in the cooling cycle with the gas leak tester (electric type).
If there is any leaking point, re-tighten.

CAUTION

Make sure that the tester is for R134a coolant.
(Tester for flon coolant is not usable due to low sensibility)

Reference Only

3. Charging from the low pressure side

(1) Make sure that the valves for high pressure side, low pressure side and service bottle are all closed.
(2) Start the engine and set the speed to 1400 to 1600 rpm and open the cab door completely.
(3) Turn ON the air con. switch and set the fan switch to max. and temperature adjusting switch to max. cooling.
(4) Set the delivery pressure of the compressor to 1.37 to 1.57 MPa [14 to 16 kg/cm^2] during charging.

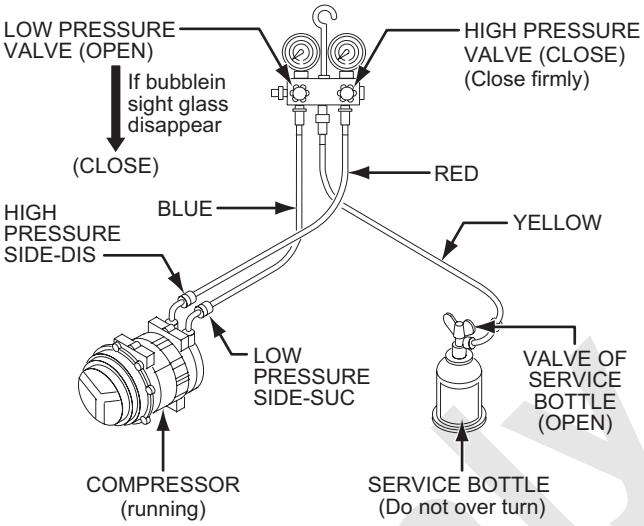

Gas charging work (high pressure side)

(5) Open the low pressure valve of the gauge manifold and the service bottle valve and charge the coolant until the bubble in the receiver sight glass disappear.

Full gas charging amount	850 to 950 g (1.87 to 2.09 lbs)

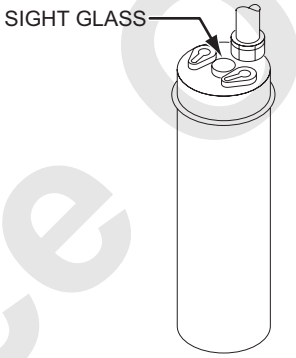

Receiver dryer

(6) When the coolant charging is completed, close the low pressure valve of the manifold and the service bottle valve and stop the engine.

CAUTION

- **NEVER open the high pressure side valve of the gauge manifold.**
- **NEVER place the service bottle upside down.**
  (Liquid form of coolant may be injected into the cooling cycle and may damage the compressor valve.)

Reference Only

4. Guidepost of recharging coolant amount

Judgement from sight glass view of the receiver dryer

Judge result	Coolant condition	Coolant change
In case of travel charge	After A/C turned on, bubbles appear a little, hereafter it becomes transparent, and shows milk-white.	◉ → ○ → ●
In case of overcharge	After A/C turned on, no bubble appears.	○ → ○ → ○
In case of insufficient charge	After A/C turned on, bubbles can be seen continuously.	◉ → ◉ → ◉

◉ Bubbles exist :Vapor and liquid of refrigerant are mixed.

○ No bubbles :All refrigerant becomes liquid and is transparent.

● Impurity :Oil and refrigerant are separated, and show milk-white.

⚠ CAUTION

The air conditioner is operated when the coolant (R134a) is very low, it may badly affect the compressor.
If the coolant is overcharged, it will rather reduce the cooling performance and the cooling cycle becomes extreme high pressure and is dangerous.
Keep the correct amount of coolant.

5. Removal of the gauge manifold

When the inspection of coolant recharging is completed, remove the charging hose from the compressor under the following procedure.

(1) Push the L shaped fitting of the lower pressure side charging hose (blue) to the service valve of the compressor to prevent coolant leaking and loosen the nut.
When the nut is removed, quickly remove the charging hose from the service valve.
(2) Keep the high pressure side until the high pressure gauge reading becomes lower than 0.98 MPa (10 kg/cm^2).
(3) Remove the high pressure side charging hose (red) in the same procedure as the low pressure side.

Reference Only

11.8 TROUBLESHOOTING

1. Trouble in cooling circuit

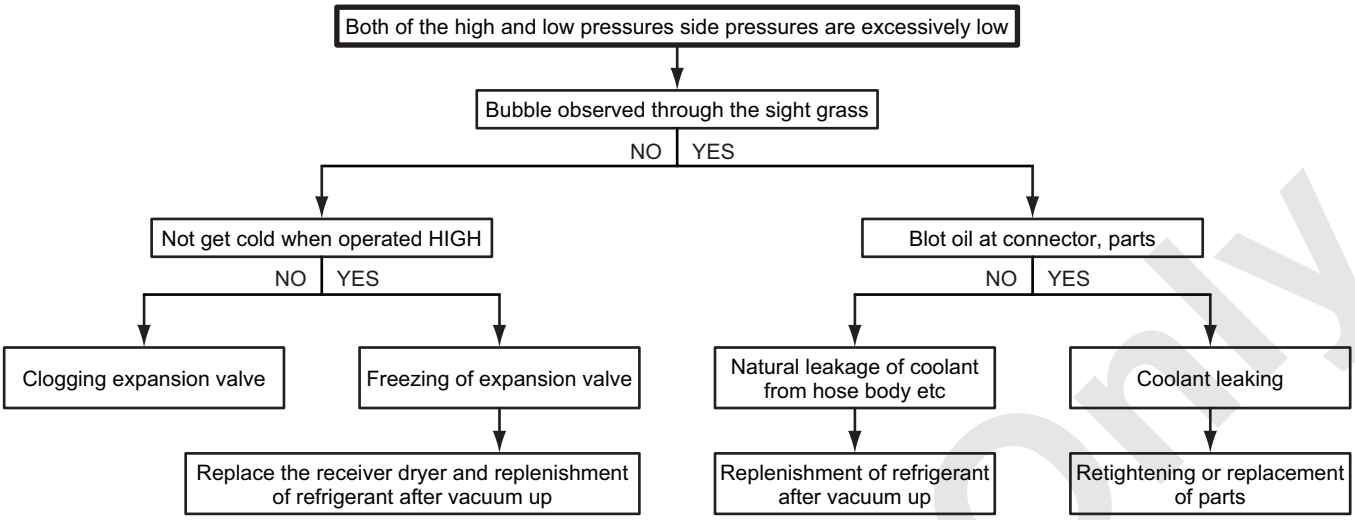

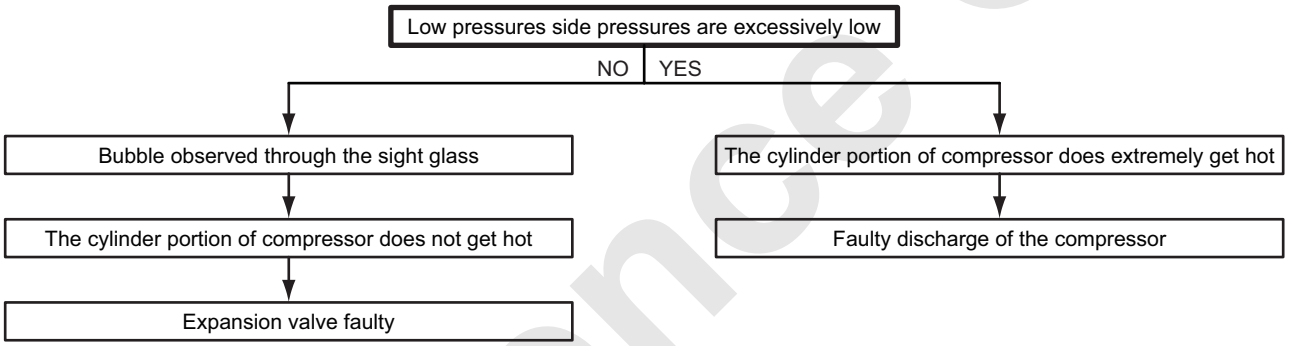

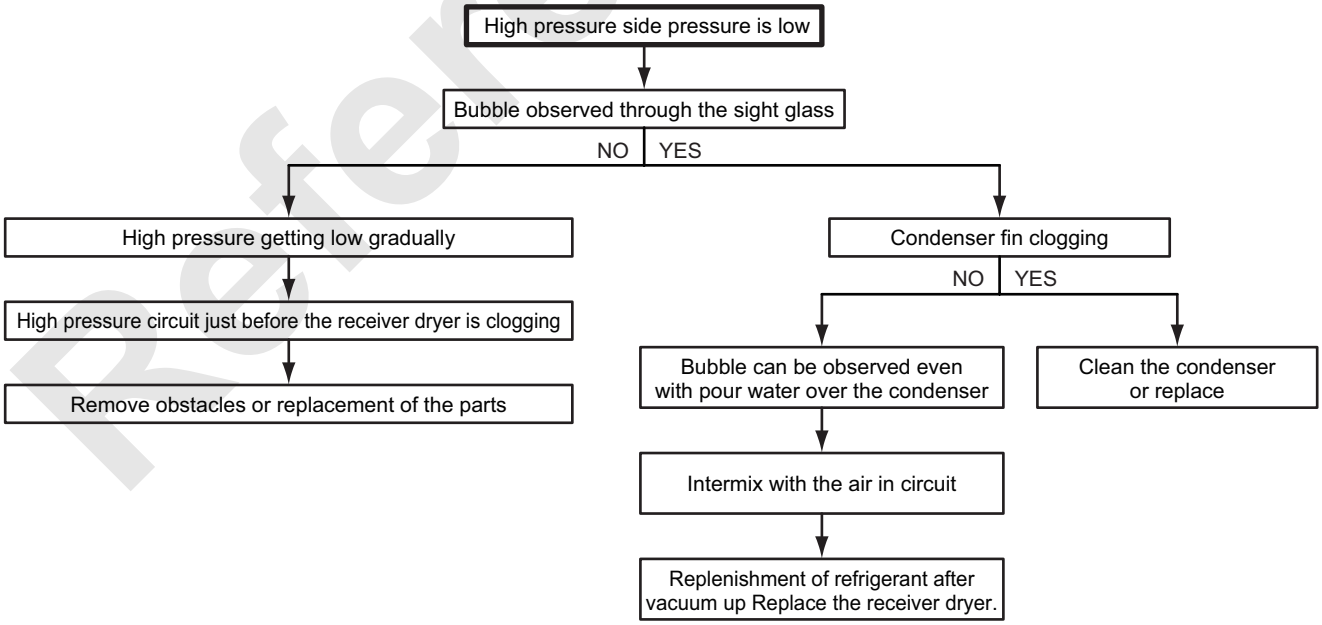

Reference Only

2. Magnet clutch does not rotated

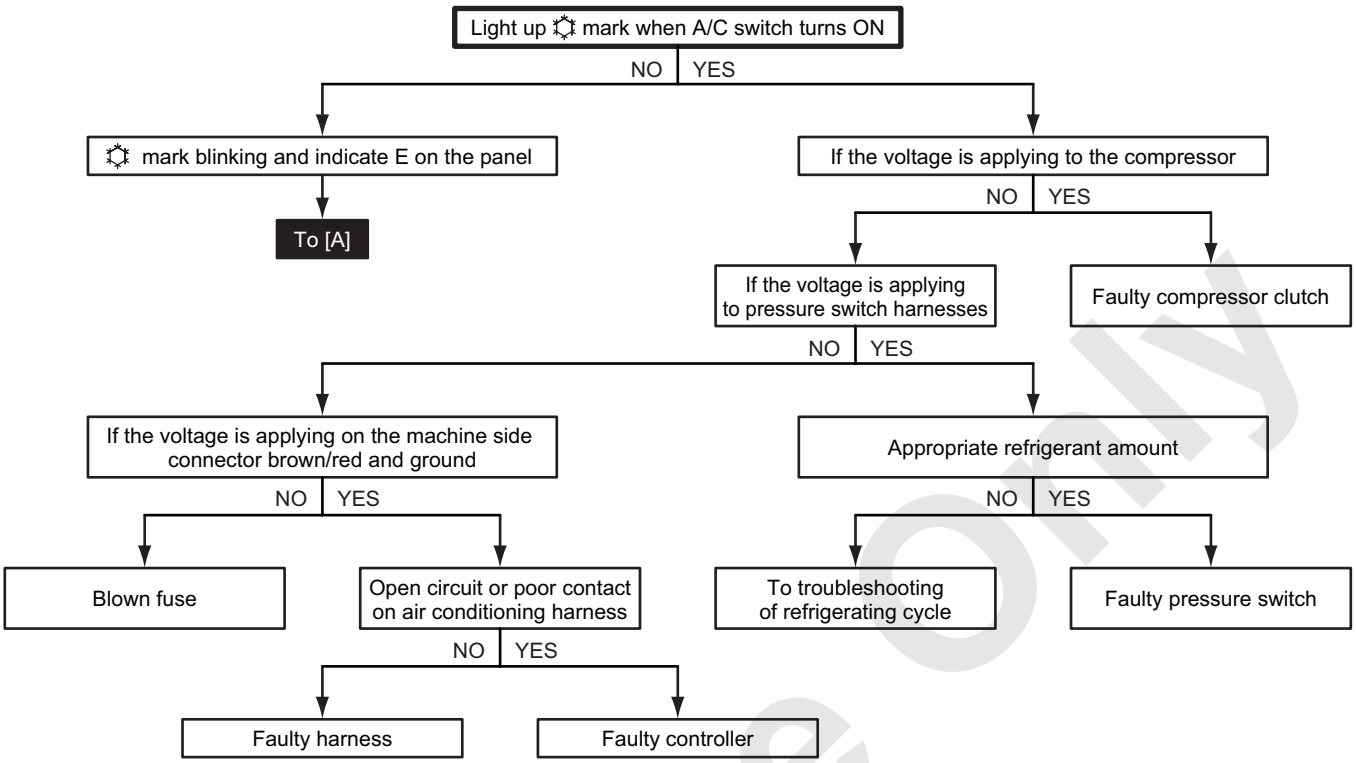

Reference Only

3. Mode does not change

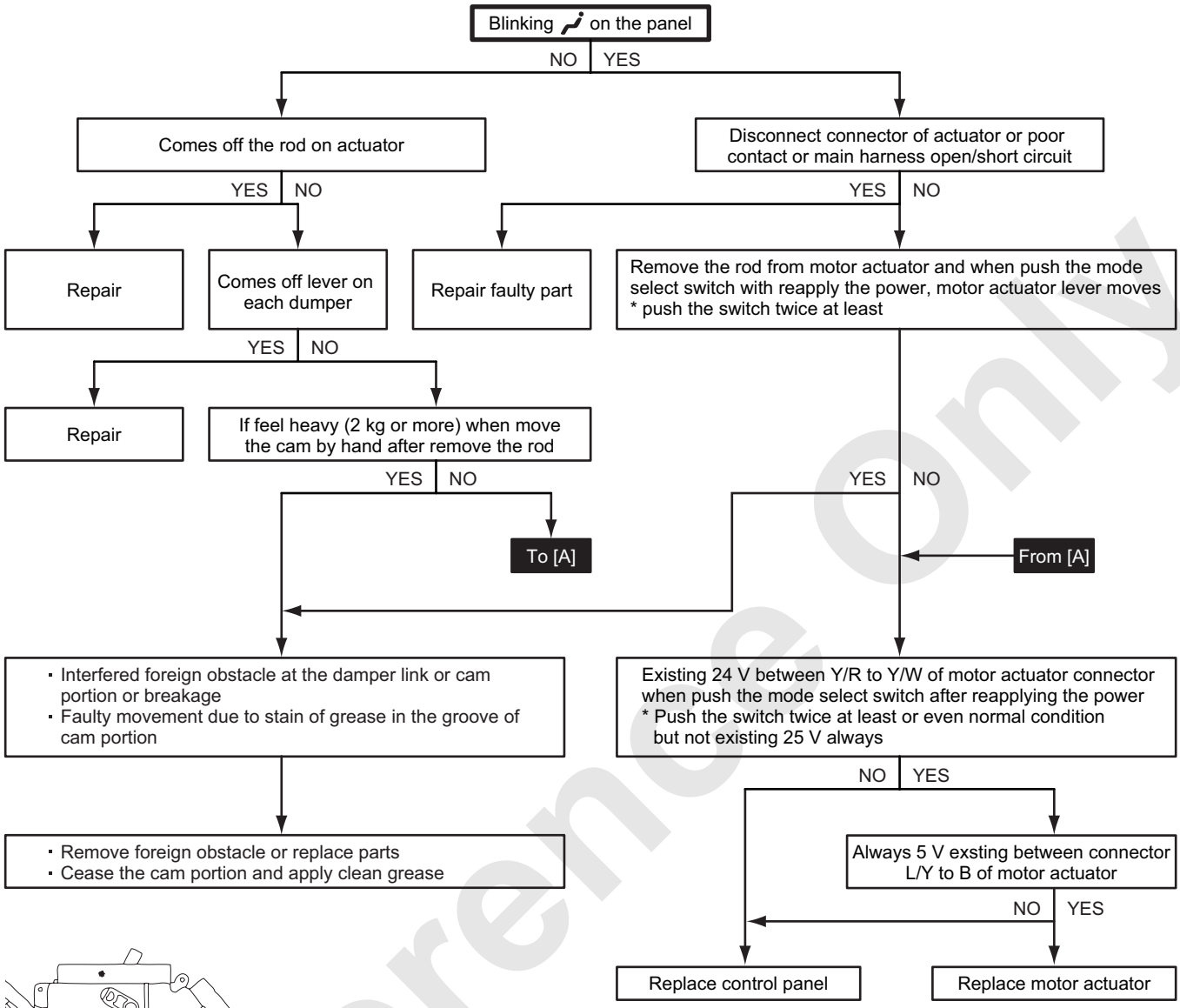

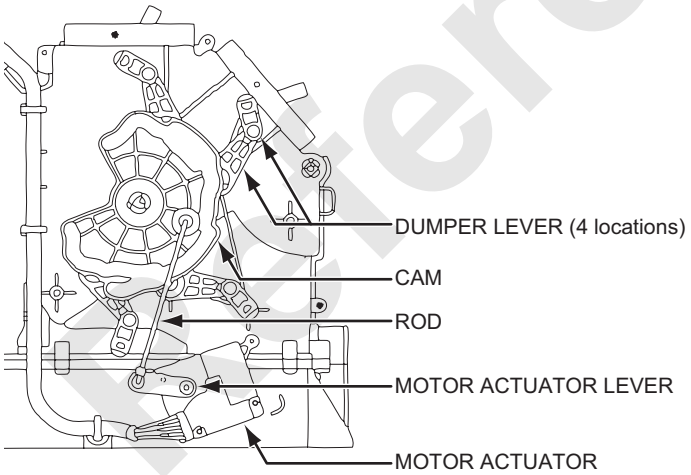

Reference Only

4. Blower motor does not rotated

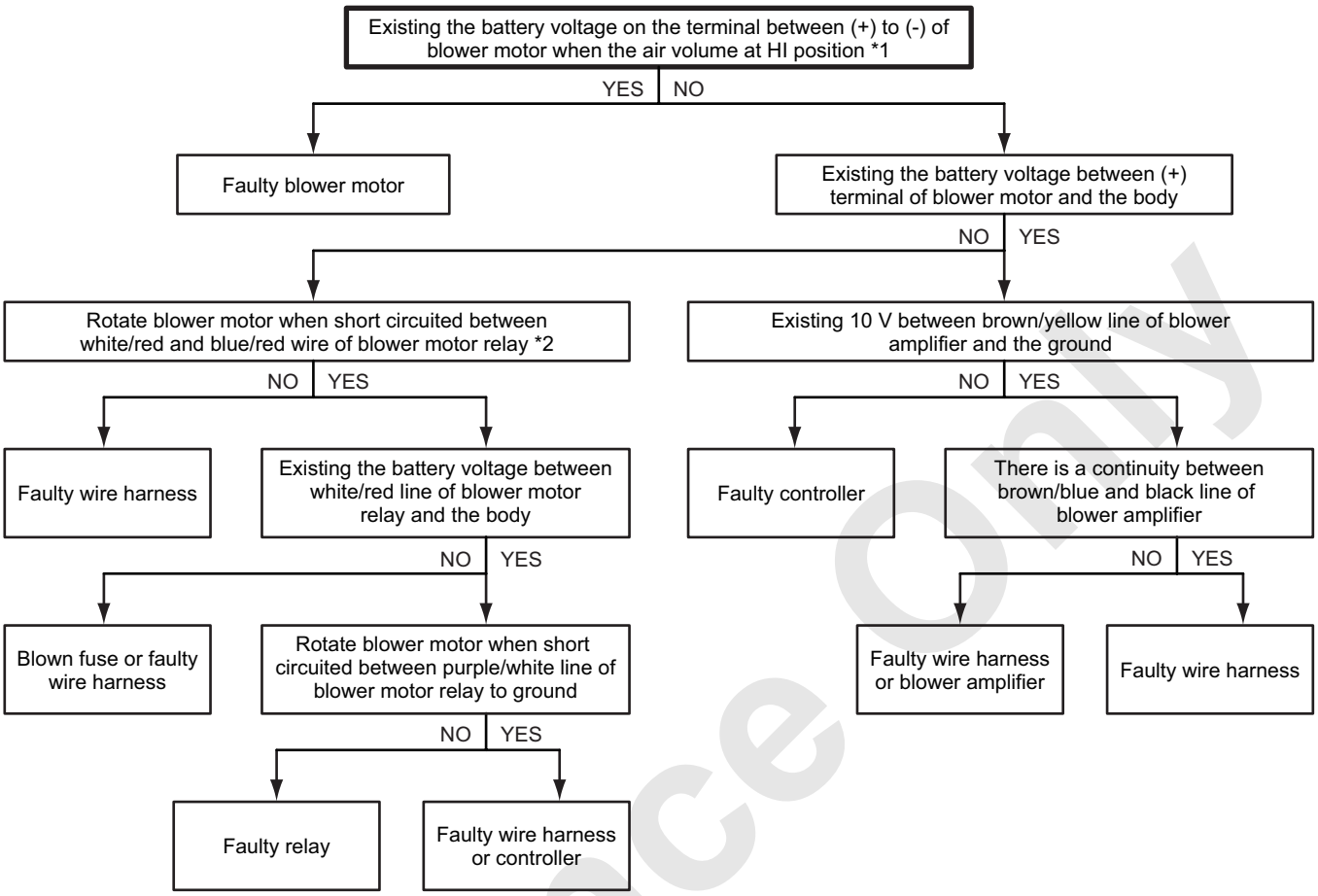

*1 Measure when the connectors are connected.

*2 When short circuit test is performed, the air conditioner, base machine key and lighting switches should be turned OFF for safety.

Reference Only

Reference Only

12. TRANSLIFTER SYSTEM

12.1 APPARATUS AND COMPONENTS LOCATION 12-1
12.2 CONSTRUCTION AND FUNCTION 12-2
12.2.1 HYDRAULIC SCHEMATIC 12-2
12.2.2 RAISING THE TRANSLIFTER 12-3
12.2.3 LOWERING THE TRANSLIFTER 12-4
12.3 REMOTE CONTROL SWITCH BOX 12-5

Reference Only

Reference Only

12. TRANSLIFTER SYSTEM

12.1 APPARATUS AND COMPONENTS LOCATION

The translifter system consists of the vertical cylinder, crawler EXT./RET. cylinder (horizontal cylinder), control valve, remote control switch box.

The pressurized oil discharged from the No.7 pump which is mounted on the main pump is controlled by the hydraulic selector section of the 2 section control valve (gantry control valve), and is led to the translifter control valve through the swivel joint.
The pressurized oil controlled by the remote controller is sent to the respective cylinders.

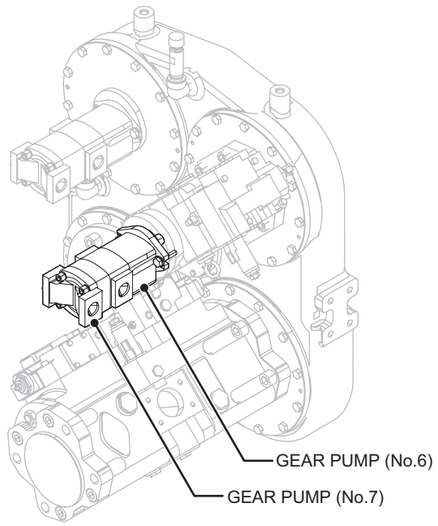

Unit : mm

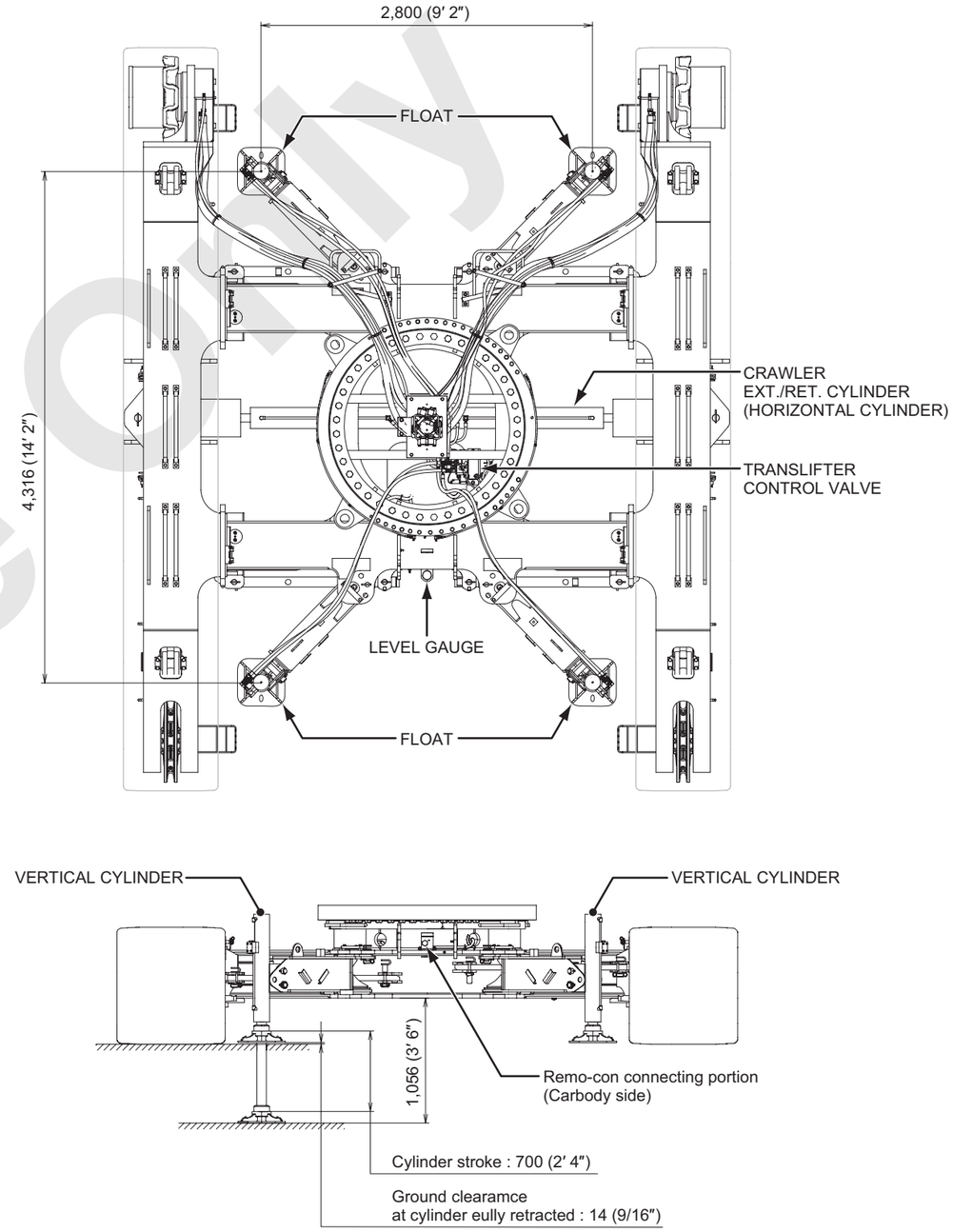

Reference Only

12.2 CONSTRUCTION AND FUNCTION

12.2.1 HYDRAULIC SCHEMATIC

The function is common to the four translifter vertical cylinders.
The function of the crawler ext./ret. cylinders is almost identical to that of the vertical cylinders except double pilot check valve.
The function of the translifter cylinders is described below taking the front right vertical cylinder as an example.

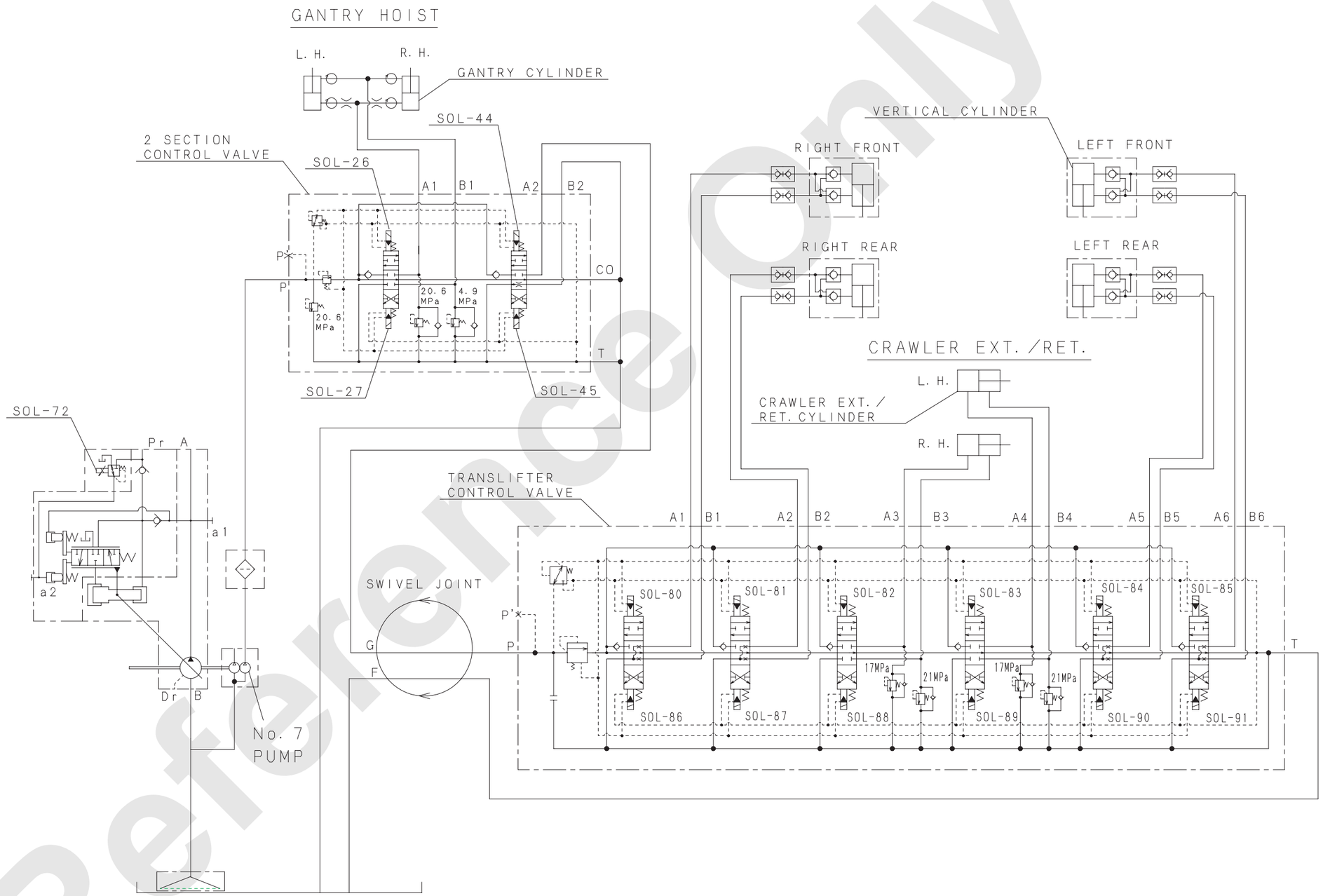

Reference Only

12.2.2 RAISING THE TRANSLIFTER

The pressurized oil discharged from the auxiliary unit No.7 pump is led into the hydraulic circuit select section through the gantry section of 2 section control valve.
At this time, if the hydraulic circuit select switch is in “NEUTRAL (GANTRY)” position, the pressurized oil flows through the 2 section control valve, and returns to the tank without any load.

When the remote control switch is connected to the machine, the SOL-44 actuates, causing the pressurized oil to flow through the swivel joint and into the translifter control solenoid valve.

If the translifter control solenoid valve remains unactuated, the pressurized oil flows through the valve, and returns to the tank without any load.
When the “right front” vertical cylinder switch is set to the “EXTEND” side, the solenoid valve (SOL-80) actuates, causing the pressurized oil not only to flow into the head side of the vertical cylinder but also to open the rod side check of the double pilot operated check valve.
As a result, the oil in the rod side returns to the tank, and the right front vertical cylinder is extended.

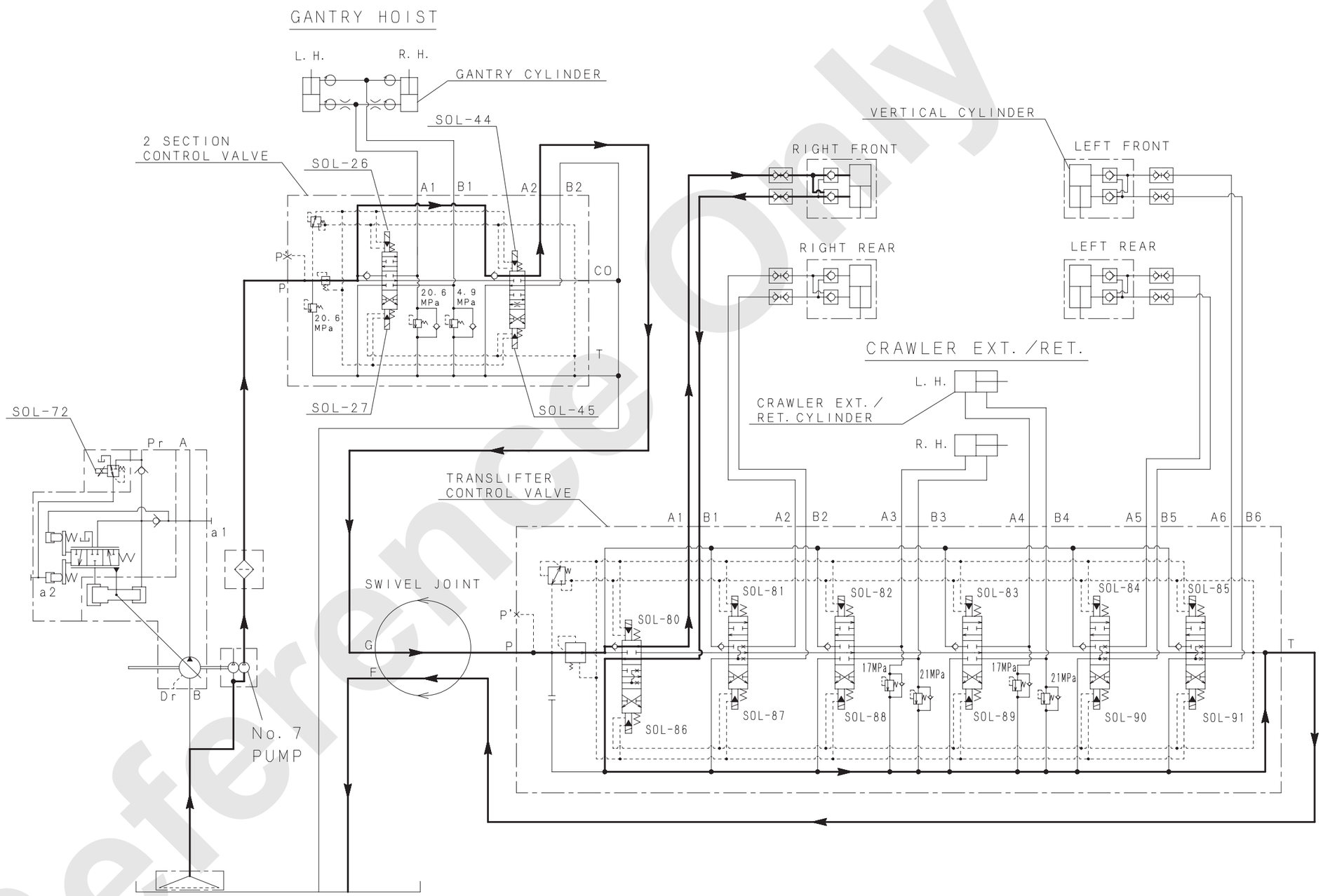

Reference Only

12.2.3 LOWERING THE TRANSLIFTER

The pressurized oil discharged from the auxiliary unit No.7 pump is led into the gantry and hydraulic selector valve through the gantry section of the 2 section control valve.
At this time, if the hydraulic circuit select switch is in “NEUTRAL (GANTRY)” position, the pressurized oil flows through the 2 section control valve, and returns to the tank without any load.

When the hydraulic circuit select switch is selected to “TRANSLIFTER” position, the SOL-44 actuates, causing the pressurized oil to flow through the swivel joint and into the translifter control solenoid valve.

If the translifter control solenoid valve remains unactuated, the pressurized oil flows through the valve, and returns to the tank without any load.
When the “right front” vertical cylinder switch is set to the “RETRACT” side, the SOL-86 actuates, causing the pressurized oil not only to flow into the rod side of the vertical cylinder but also to open the head side check of the double pilot operated check valve.
As a result, the oil in the head side returns to the tank, and the right front vertical cylinder is retracted.

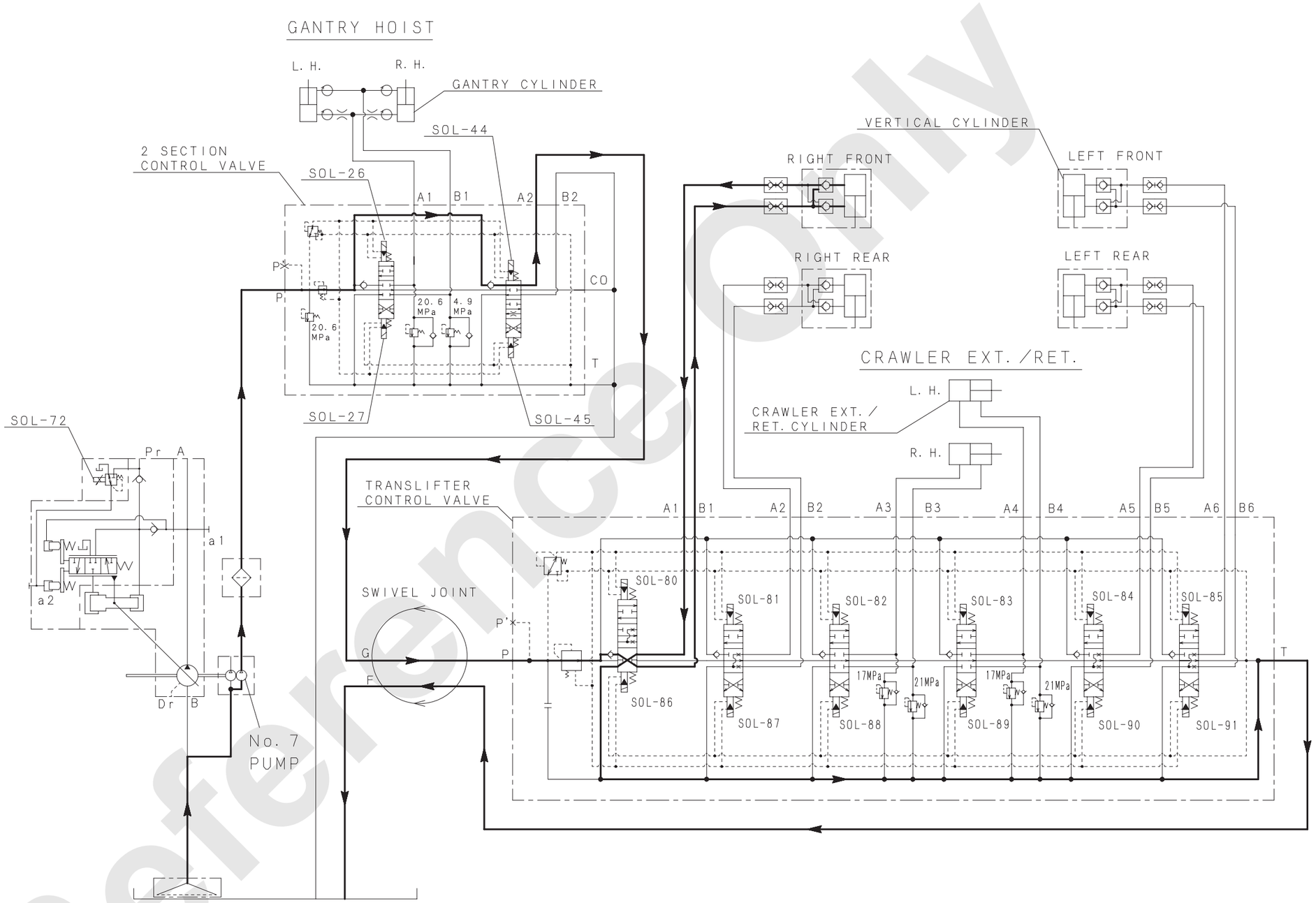

Reference Only

12.3 REMOTE CONTROL SWITCH BOX

This machine provides the remote control switch box (here after called “remo-con”) for operate the machine from outside at the assembling/disassembling.

Note

When a power switch of remote control switch box is ON position, the engine can’t be started with the engine key in the operator’s cab.
When starting the engine from key switch in the operator’s cab, ensure to turn the power switch of remote control box OFF position.

1. Connection with the carbody side

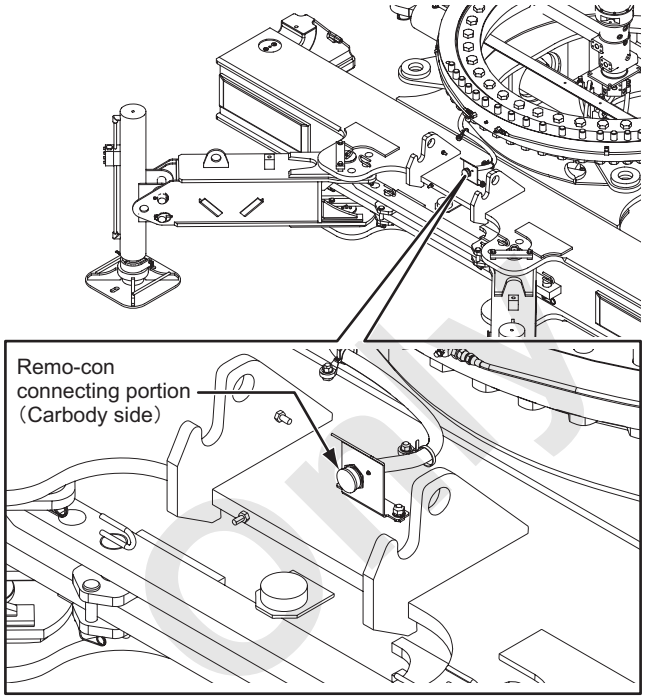

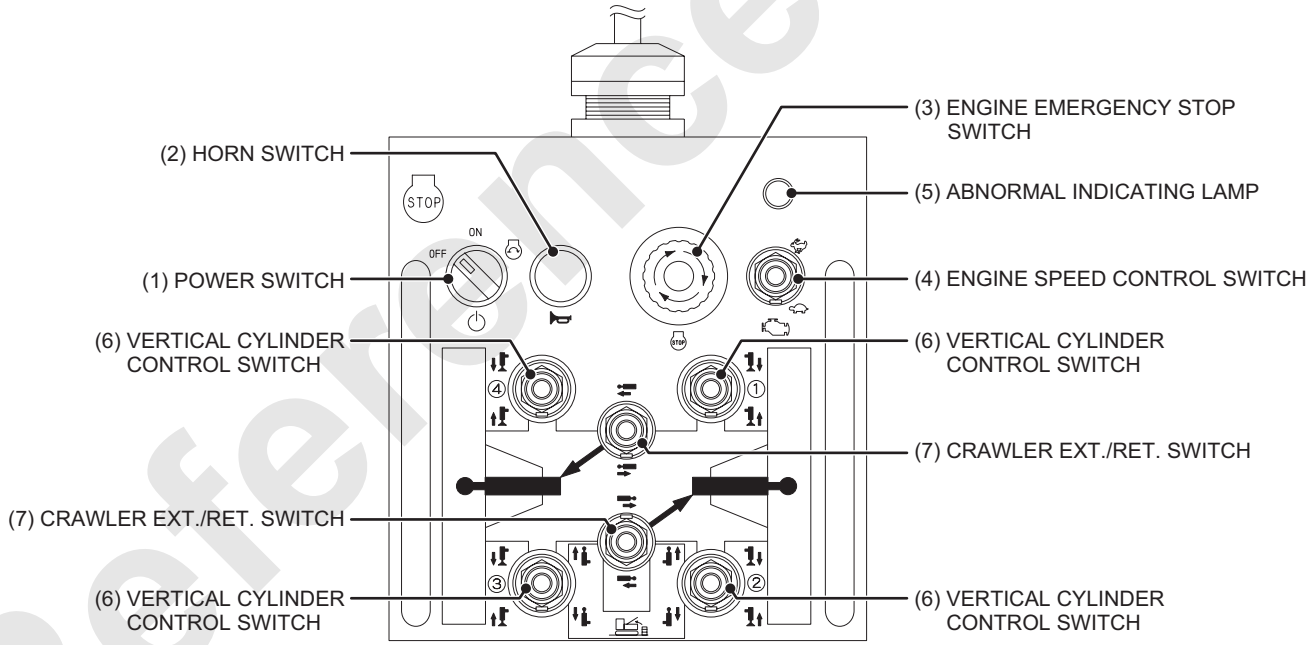

REMOTE CONTROL SWITCH BOX

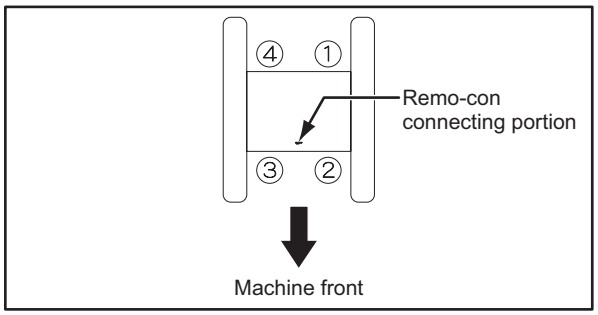

Reference Only

(1) POWER SWITCH

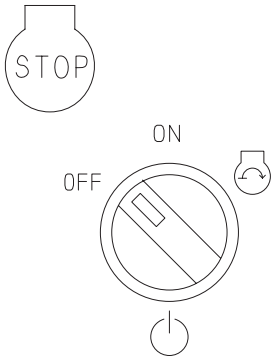

OFF	Power off. / Engine stop. Turning to this position stops the engine.
ON	Power is supplied to crane portion.
	Engine starts. When released, the switch automatically return to ON position.

Note

The engine can't start from the operator's cab if in case this power switch is on position.

(2) HORN SWITCH
Press this switch to sound the horn.

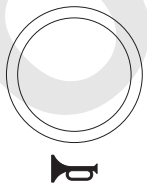

(3) ENGINE EMERGENCY STOP SWITCH
Press this switch to stop the engine in emergency.
The switch stays at depressed position.
To reset, turn the switch to right or pull.

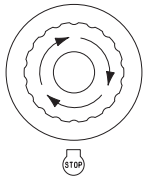

* Use only to stop the engine at emergency case.

(4) ENGINE SPEED CONTROL SWITCH

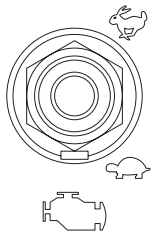

	Increase the engine speed.
	Decrease the engine speed.

(5) ABNORMAL INDICATING LAMP
This lamp turns ON when the engine abnormality occurs.
When this lamp is ON, check the detail of abnormality by the cab monitor and take appropriate action.

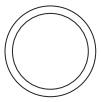

Reference Only

(6) VERTICAL CYLINDER CONTROL SWITCH
This switch is used to control the translifter.

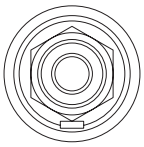

,	Vertical cylinder extends.
,	Vertical cylinder retracts.

(7) CRAWLER EXTEND/RETRACT SWITCH
This switch is used to control the crawler extend/retract cylinder.

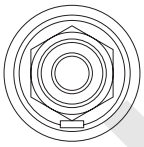

,	Crawler extend/retract cylinder extends.
,	Crawler extend/retract cylinder retracts.

Reference Only

2. Connection with the self removal device side

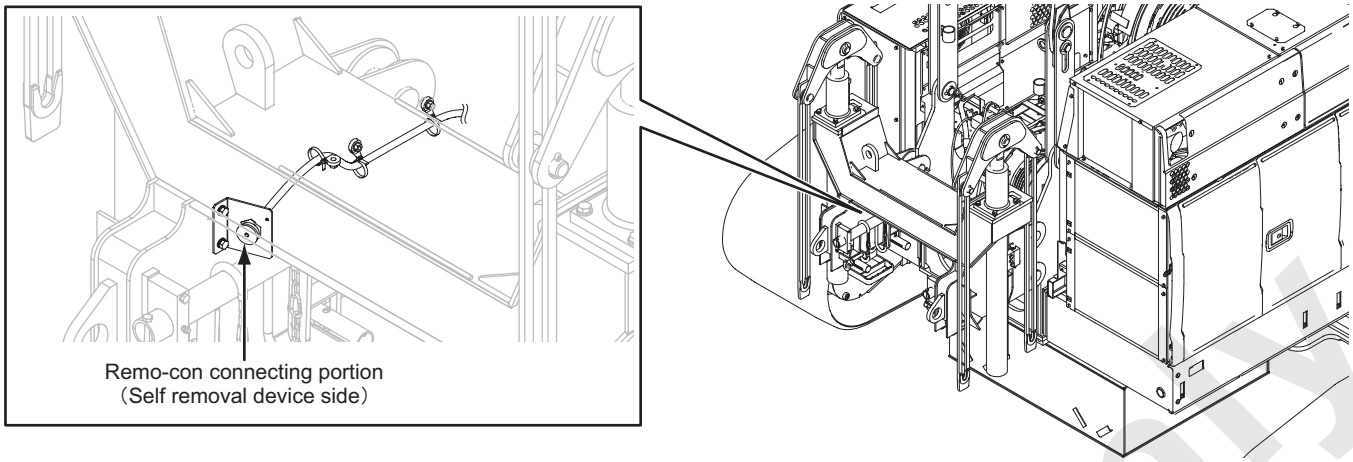

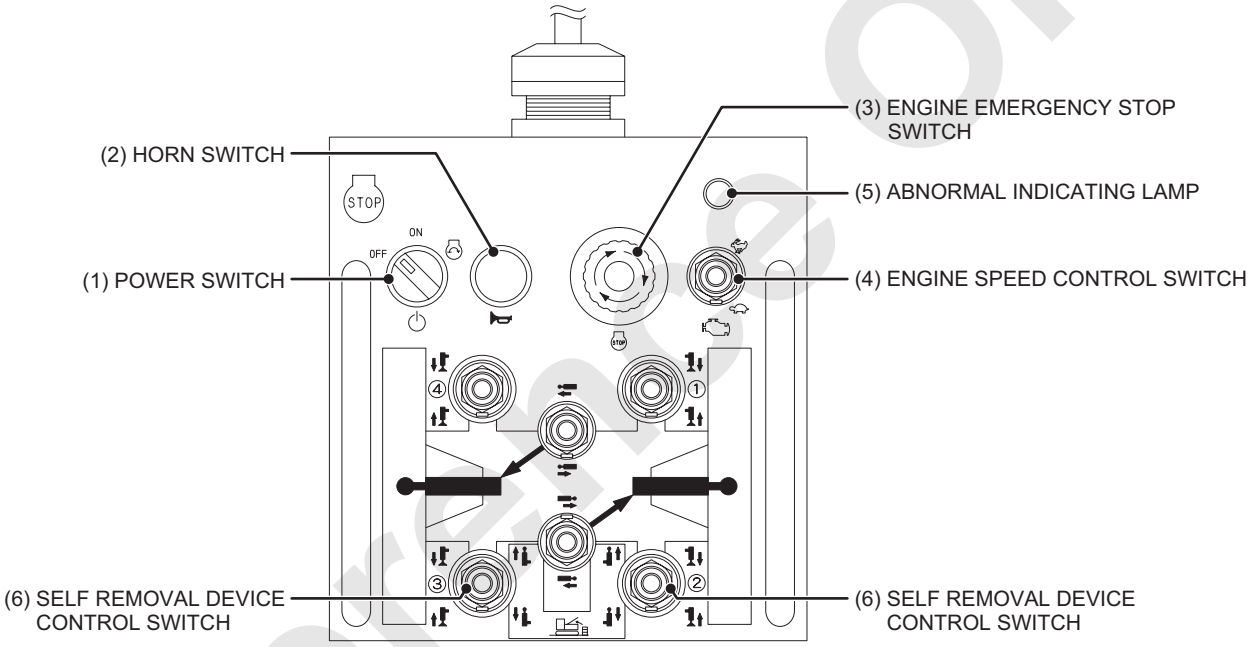

REMOTE CONTROL SWITCH BOX

Switches (1) to (5) are same functions when connect the switch box with carbody.

(6) SELF REMOVAL DEVICE CONTROL SWITCH
This switch is used to control self-removal cylinders.

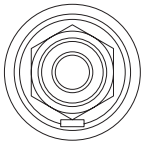

↓, ↓	Self-removal cylinder extends.
↑, ↑	Self-removal cylinder retracts.

Reference Only

3. Construction

When the controller is failed or the cable breakage occurs but the machine still need to be operated, repair upon reviewing the controller circuit or apply voltage directly on the solenoid valve.

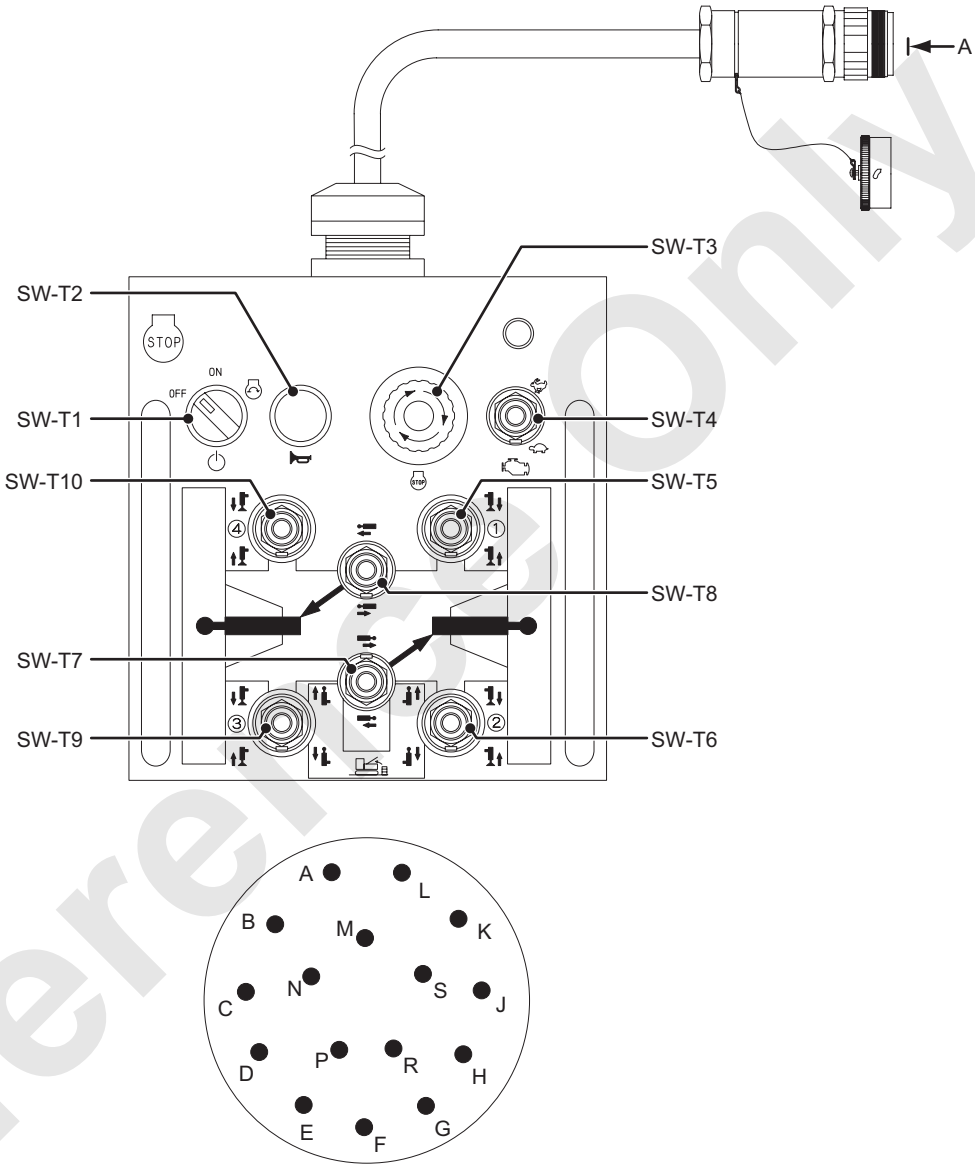

View from A

Reference Only

4. Schematic

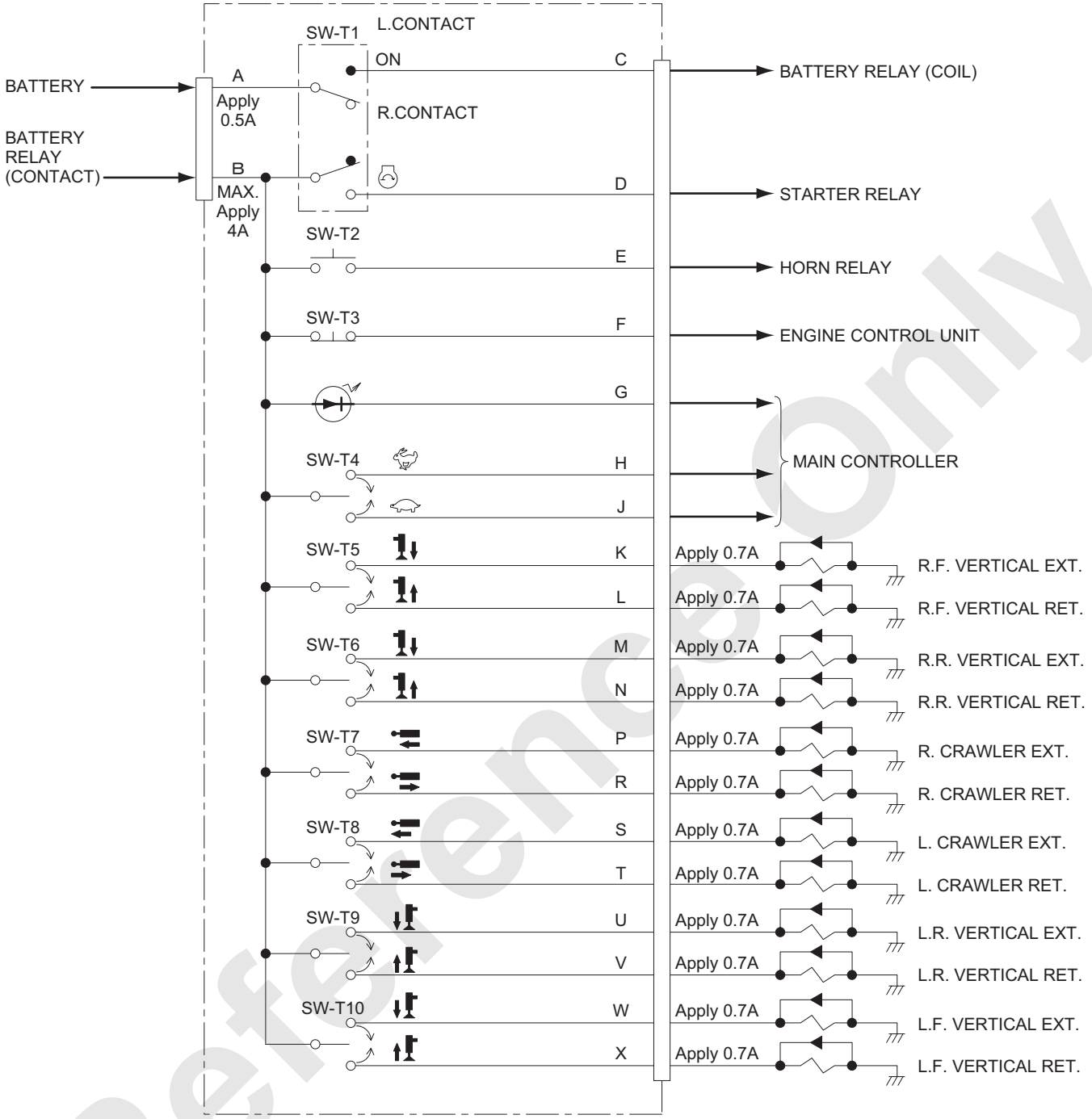

Reference Only

13. TROUBLESHOOTING

13.1 ENGINE 13-1
13.2 WINCH SYSTEM 13-3
13.3 SWING SYSTEM 13-8
13.4 TRAVELING SYSTEM 13-11

Reference Only

Reference Only

13. TROUBLESHOOTING

Grasp the appropriate trouble contents and make the most useful action from this troubleshooting table.

13.1 ENGINE

TROUBLESHOOTING OF ENGINE

Symptom	Possible cause	Check points	Remedy
Engine does not start.	Battery is dead.	Check the battery electrolyte for level and specific gravity.	Charge or replace the battery.
	Starter is not rotating.	Check the starter relay for operation.	Replace the starter relay.
		Check contents of the error/warning displayed on the main monitor.	Reset the error/warning.
		Check that the Engine Emergency Stop switch is not pushed.	Release the Engine Emergency Stop switch (inside cabin or via remote controller).
		Check the safety relay for operation.	Replace the safety relay.
		The operator is not authenticated.	Conduct operator authentication work.
		Check whether the fuse (F30) is blown or not.	Replace the fuse (F30).
	Fuel is not supplied.	Check presence of fuel and flow of fuel in piping.	Supply fuel or replenish fuel in the priming pump.
			Conduct air bleeding.
		Check elements of the fuel filters (main and pre filters) for clogging.	Replace elements of the fuel filters (main and pre filters)
		Check that fuel open/close valve is not closed.	Open the open/close valve.
	Air intake is not performed.	Check that air cleaner element is not clogged.	Clean or replace the air cleaner element.
		Check the air intake piping (from air cleaner, turbo intercooler to engine) for clogging.	Eliminate the clogging.
	Engine error signal (P code) is output.	Check contents of the error.	Take action after locating the cause in accordance with the Engine Maintenance Manual.
			Contact Manitowoc authorized distributor as needed.
Engine does not stop.	Defective electrical system	Key switch in trouble	Replace the key switch.
Engine speed does not increase.	Accelerator grip is in trouble.	Check whether grip trouble error signal is output or not.	The aux. accelerator switch toward “ON” side.

Reference Only

TROUBLESHOOTING OF ENGINE

Symptom	Possible cause	Check points	Remedy
Engine speed does not increase.	Malfunctioning of ECU	Check the P code.	Check the Engine Manual.
	Defective electrical system	Defective controller.	Replace the controller. (Conduct the work with aux. accelerator.)
	Insufficient of DEF/AdBlue®	Check residual amount of DEF/AdBlue®.	Replenishment of DEF/AdBlue®.
	Engine error signal (P code) is output.	Check contents of the error.	Take action after locating the cause in accordance with the Engine Maintenance Manual.
			Contact Manitowoc authorized distributor as needed.
Engine revolutions are uneven.	Fuel is not supplied.	Check presence of fuel and flow of fuel in piping.	Supply fuel or replenish fuel in the priming pump.
			Conduct air bleeding.
		Check elements of the fuel filters (main and pre filters) for clogging.	Replace elements of the fuel filters (main and pre filters)
	Air intake is not performed.	Check that air cleaner element is not clogged.	Clean or replace the air cleaner element.
		Check the air intake piping (from air cleaner, turbo intercooler to engine) for clogging.	Eliminate the clogging.
	Engine error signal (P code) is output.	Check contents of the error.	Take action after locating the cause in accordance with the Engine Maintenance Manual.
			Contact Manitowoc authorized distributor as needed.
Overheating	Cooling water is not enough.	Check the cooling water level.	Replenish cooling water.
	Cooling water is not supplied.	Check that the thermostat is not stuck.	Replace the thermostat.
		Check water piping for clogging.	Eliminate the clogging.
	Cooling air volume is not enough.	Check that the fan is not slipping.	Adjust the V belt tension.
		Check that the radiator front face is not blocked with dust and others.	Blow air to clean the radiator.
		Check that there are no obstacles in openings on the air supply and exhaust sides of the guard.	Remove the obstacles.
	Engine error signal (P code) is output.	Check contents of the error.	Take action after locating the cause in accordance with the Engine Maintenance Manual.
			Contact Manitowoc authorized distributor as needed.

Reference Only

13.2 WINCH SYSTEM

TROUBLESHOOTING OF WINCH SYSTEM

Symptom	Possible cause	Check points	Remedy
Hoisting and lowering unable to do.	Hydraulic oil is not enough.	Check the hydraulic oil tank oil level.	Replenish hydraulic oil.
		Check the suction strainer for clogging.	Wash or replace the strainer.
	Clutch is slipping.	Check the positive and negative pressures.	Replace the positive and negative pressure selector valve.
	Malfunctioning of remote control valve	Check whether the secondary pressure generation is normal.	Replace the remote control valve.
	Malfunctioning of remote control circuit relief valve	Check the primary pressure.	Adjust the primary pressure or replace the valve.
		Check the function lock limit switch for operation.	Adjust operation of the limit switch or replace the limit switch.
		Check the function lock solenoid valve for operation.	Replace the solenoid valve.
	Malfunctioning of main pump	Check whether traveling system is functioning.	Replace the main pump.
	Malfunctioning of main valve	Check the main valve relief pressure.	Adjust the relief valve pressure or replace the relief valve.
		Check the pilot pressure on the main valve.	Check and replace the remote control valve.
	Malfunctioning of hoisting motor	Check the counter balance valve spool movement.	Replace the valve.
		Check the counter balance valve poppet for deposition of contaminant and flaw on seat surface.	Wash or replace the poppet.
		Check the motor drain oil amount. 1. Conditions for motor drain measurement (1) Engine rpm : High idle (2) Hyd. oil temp. : 50°C (VG46) (3) Trimmer position: Max. High (For motor swash angle to be minimum) (4) Lifting load: Empty hook only (5) Operate either front or rear drum lever with full stroke. 2. Drain amount : 10 L/min or less.	Replace the motor.
	Malfunctioning of hoisting reduction unit.	Check for unusual noise, temperature and vibration.	Replace the reduction gears/unit.
	Automatic stop, interlock, stop electrically and others.	Check the contents of the stopping condition.	Release the functions (elimination of cause of auto stop and release of interlock)

Reference Only

TROUBLESHOOTING OF WINCH SYSTEM

Symptom	Possible cause	Check points	Remedy
Intended hoisting and lowering speeds unable to obtain.	Hydraulic oil is not enough.	Check the hydraulic oil tank oil level.	Replenish hydraulic oil.
		Check the suction strainer for clogging.	Wash or replace the strainer.
	Clutch is slipping.	Check the positive and negative pressures.	Replace the positive and negative pressure selector valve.
	Malfunctioning of remote control valve	Check whether the secondary pressure generation is normal.	Replace the remote control valve.
	Malfunctioning of remote control circuit relief valve	Check the primary pressure.	Adjust the primary pressure or replace the valve.
	Malfunctioning of main pump	Check whether traveling system is functioning.	Replace the main pump.
	Malfunctioning of main valve	Check the main valve relief pressure.	Adjust the relief valve pressure or replace the relief valve.
		Check the pilot pressure on the main valve.	Check and replace the remote control valve.
	Malfunctioning of hoisting motor	Check the counter balance valve spool movement.	Replace the valve.
		Check the counter balance valve poppet for deposition of contaminant and flaw on seat surface.	Wash or replace the poppet.
		Check the motor drain oil amount.	Replace the motor.
		Check motor tilt control proportional solenoid valve.	Replace proportional solenoid valve.
	Malfunctioning of hoisting reduction unit.	Check for unusual noise, temperature and vibration.	Replace the reduction gears/unit.
	Malfunctioning of engine sensing	Check the voltage of the engine rotation grip or rotating speed sensor.	Adjust the rotation grip L/H level or replace the rotation grip.
		Check the voltage of the main pump proportional solenoid valve for pressure reducing.	Adjust or replace the proportional solenoid pressure reducing valve.
	Speed trimmer position is minimized.	Check the speed trimmer position.	Maximize the speed trimmer.

Reference Only

TROUBLESHOOTING OF WINCH SYSTEM

Symptom	Possible cause	Check points	Remedy
Hoisting and lowering speeds unable to control.	Clutch is slipping.	Check the positive and negative pressures.	Replace the positive and negative pressure selector valve.
	Malfunctioning of remote control valve	Check whether the secondary pressure generation is normal.	Replace the remote control valve.
	Malfunctioning of remote control circuit relief valve	Check whether the primary pressure generation is normal.	Adjust the primary pressure or replace the valve.
	Malfunctioning of main pump	Check whether traveling system is functioning.	Replace the main pump.
	Malfunctioning of main valve	Check the main valve relief pressure.	Adjust the relief valve pressure or replace the relief valve.
		Check the pilot pressure on the main valve.	Check and replace the remote control valve.
	Malfunctioning of hoisting motor	Check the counter balance valve spool movement.	Replace the valve.
		Check the motor drain oil amount.	Replace the motor.
	Malfunctioning of hoisting reduction unit.	Check for unusual noise, temperature and vibration.	Replace the reduction gears/unit.
Inching operation unable to do.	Clutch is slipping.	Check the positive and negative pressures.	Replace the positive and negative pressure selector valve.
	Malfunctioning of remote control valve	Check whether the secondary pressure generation is normal.	Replace the remote control valve.
	Malfunctioning of remote control circuit relief valve	Check whether the primary pressure generation is normal.	Adjust the primary pressure or replace the valve.
	Slow reaction of negative brake valve	Check the negative brake release pressure.	Check the negative brake release valve and the slow return valve.
Suspended load unable to hold.	Malfunctioning of hoisting motor	Check the counter balance valve spool movement.	Replace the valve.
		Check the counter balance valve poppet for deposition of contaminant and flaw on seat surface.	Wash or replace the poppet.
		Check the motor drain oil amount.	Replace the motor.

Reference Only

TROUBLESHOOTING OF WINCH SYSTEM

Symptom	Possible cause	Check points	Remedy
Suspended load unable to hold.	[Operations on negative brake side]		
	Clutch is slipping.	Check the positive and negative pressures.	Replace the positive and negative pressure selector valve.
	Negative brake is released.	Check the negative brake release pressure.	Check the negative brake release valve and the slow return valve.
	Malfunctioning of remote control valve	Check the secondary pressure.	Replace the remote control valve.
	[Operations on positive brake side]		
	Clutch is slipping.	Check the brake pedal linkage for loosening and interference.	Adjust or repair the linkage.
		Check the positive and negative pressures.	Replace the positive and negative pressure selector valve.
Free fall function is unable to do.	Clutch cannot be released.	Check the positive and negative pressures.	Replace the positive and negative pressure selector valve.
		Check the brake pedal linkage for loosening and interference.	Adjust or repair the linkage.
		Check the specified brake force is output.	Replace the negative and positive brake units.
		Check the positive brake control valve spool movement.	Replace the valve.
	Malfunctioning of remote control circuit relief valve	Check whether the primary pressure generation is normal.	Adjust the primary pressure or replace the valve.
		Check the function lock limit switch works.	Adjust the movement of the limit switch or replace the limit switch.
		Check the function lock solenoid valve function.	Replace the solenoid valve.
	Malfunctioning of hoisting reduction unit.	Check for unusual noise, temperature and vibration.	Check the shaft, gear and bearing for unusual noise and seizure.
			Repair the shaft and bearing or replace parts.
	Defective electrical system	Check the fuse (F-38) for blowing as well as wiring.	Replace the fuse (F-38) or repair the wiring.
		Check the free fall selector switch function.	Replace the switch or repair the wiring.
		Check the relay for switching and the contact for burn mark.	Replace the relay or repair the wiring.
		Check the free fall selector solenoid valve for function.	Replace the solenoid valve or repair the wiring.

Reference Only

TROUBLESHOOTING OF WINCH SYSTEM

Symptom	Possible cause	Check points	Remedy
Hunting	Hydraulic oil is not enough.	Check the hydraulic oil tank oil level.	Replenish hydraulic oil.
		Check the suction strainer for clogging.	Wash or replace the strainer.
	Malfunctioning of hoisting motor	Check the counter balance valve spool movement.	Replace the valve.
		Check the counter balance valve poppet for deposition of contaminant and flaw on seat surface.	Wash or replace the poppet.
		Check the motor drain oil amount.	Replace the motor.
	Malfunctioning of remote control valve	Check whether the secondary pressure generation is normal.	Replace the spool or adjust the valve.
	Malfunctioning of remote control circuit relief valve	Check the primary pressure.	Adjust the primary pressure or replace the valve.
		Check the function lock limit switch works.	Adjust movement of the limit switch or replace the limit switch.
		Check the function lock solenoid valve function.	Replace the solenoid valve.
	Malfunctioning of main valve	Check the main valve relief pressure.	Adjust the relief valve pressure or replace the relief valve.
		Check the pilot pressure on the main valve.	Check the remote control valve.
	Malfunctioning of hoisting motor	Check the counter balance valve spool movement.	Replace the valve.
		Check the counter balance valve poppet for deposition of contaminant and flaw on seat surface.	Wash or replace the poppet.
		Check the piston for sticking or get out of place.	Check the piston movement and replace the part.
		Check the motor drain oil amount.	Replace the motor.
	Malfunctioning of hoisting reduction unit.	Check for unusual noise, temperature and vibration.	Replace the reduction gears/unit.
	Malfunctioning of engine sensing	Check the voltage of the engine rotation grip or rotating speed sensor	Adjust the rotation grip L/H level or replace the rotation grip.
		Check the voltage of the main pump proportional solenoid pressure reducing valve.	Adjust or replace the proportional solenoid pressure reducing valve.

Reference only

13.3 SWING SYSTEM

TROUBLESHOOTING OF SWING SYSTEM

Symptom	Possible cause	Check points	Remedy
Swing is unable to do. Specified swing speed unable to obtain. Lack of swing force.	Hydraulic oil is not enough.	Check the hydraulic oil tank oil level.	Replenish hydraulic oil.
		Check the suction strainer for clogging.	Wash or replace the strainer.
	Defective swing brake	Check whether the swing brake release pressure is normal or not.	Repair the swing brake valve or replace the valve.
		Check whether the pressure switch function is normal or not.	Repair the pressure switch wiring or replace the switch.
		Check the brake disc for unusual noise and high temperature.	Check the brake disk or replace the disk.
	Malfunctioning of remote control valve	Check whether the secondary pressure generation is normal.	Replace the spool or replace the valve.
	Malfunctioning of remote control circuit relief valve	Check the primary pressure.	Adjust the primary pressure or replace the valve.
		Check the function lock limit switch works.	Adjust movement of the limit switch or replace the limit switch.
		Check the function lock solenoid valve function.	Replace the solenoid valve.
	Defective swing control valve	Check the main valve relief pressure.	Adjust the relief valve pressure or replace the relief valve.
		Check the valve spool movement.	Lap or replace the spool.
	Malfunctioning of swing motor	Check the piston for sticking or get out of place.	Check the piston movement and replace the part.
		Check the motor drain oil amount.	Replace the motor.
	Malfunctioning of swing reduction unit.	Check for unusual noise, temperature and vibration.	Check the shaft and bearing for unusual noise and seizure.
			Repair the shaft, gear and bearing or replace parts.
		Check the gear oil level in the reduction gears.	Replenish gear oil or replace parts.
	Malfunctioning of swing bearing	Check for unusual noise, temperature and vibration.	Check the bolt for loosening, the bearing for flaking, wearing and seizure.
			Retighten the bolt, replace the ball and replace the bearing.
	Defective electrical system	Check the parking brake and the swing mode selector switch function.	Replace the switch or repair the wiring.
		Check the relay for switching and the point for burning mark.	Replace the relay or repair the wiring.
		Check the swing mode selector solenoid valve works.	Replace the solenoid valve or repair the wiring.

Reference Only

TROUBLESHOOTING OF SWING SYSTEM

Symptom	Possible cause	Check points	Remedy
Shock is observed at stating/stopping of swing motion. Swing motion is not smooth.	Malfunctioning of swing bearing	Check for unusual noise, temperature and vibration.	Check the bolt for loosening, the ball for problem and bearing for seizure.
			Retighten the bolt, check the bearing for flaking, wearing and if damaged replace the bearing.
		Check the swing pinion for unusual noise and vibration.	Check the pinion for tooth contact condition, seizure and chipping.
			Apply lubrication, replace the pinion.
	Defective swing brake	Check whether the swing brake release pressure is normal or not.	Repair the swing brake valve or replace the valve.
		Check whether the pressure switch function is normal or not.	Repair the pressure switch wiring or replace the switch.
		Check the brake disk for unusual noise and high temperature.	Check the brake disk or replace the disk.
	Malfunctioning of remote control circuit relief valve	Check the primary pressure.	Adjust the primary pressure or replace the valve.
		Check the function lock limit switch works.	Adjust movement of the limit switch or replace the limit switch.
		Check the function lock solenoid valve function.	Replace the solenoid valve.
	Defective swing control valve	Check the main valve relief pressure.	Adjust the relief valve pressure or replace the relief valve.
		Check the valve spool movement.	Lapping or replace the spool.
	Malfunctioning of swing motor	Check the piston for sticking or get out of place.	Check the piston movement and replace the part.
		Check the motor drain oil amount.	Replace the motor.
	Malfunctioning of swing reduction unit.	Check for unusual noise, temperature and vibration.	Check the shaft, gear and bearing for unusual noise and seizure.
			Repair the shaft and bearing or replace parts.
		Check the gear oil level in the reduction unit.	Replenish gear oil or replace parts.
	Defective electrical system	Check the parking brake and the swing mode selector switch for functioning.	Replace the switch or repair the wiring.
		Check the relay for switching and the contact points for burning mark.	Replace the relay or repair the wiring.
		Check the swing mode selector solenoid valve function.	Replace the solenoid valve or repair the wiring.

Reference Only

TROUBLESHOOTING OF SWING SYSTEM

Symptom	Possible cause	Check points	Remedy
Swing brake ineffective.	Defective swing brake	Check whether the swing brake release pressure is normal or not.	Repair the swing brake valve or replace the valve.
		Check whether the pressure switch works normal or not.	Repair the pressure switch wiring or replace the switch.
		Check the brake disk for unusual noise and high temperature.	Check the brake disk or replace the disk.
	Defective electrical system	Check the parking brake and the swing mode selector switch function.	Replace the switch or repair the wiring.
		Check the relay for switching and the contact points for burning mark.	Replace the relay or repair the wiring.
		Check the swing mode selector solenoid valve function.	Replace the solenoid valve or repair the wiring.

Reference Only

13.4 TRAVELING SYSTEM

TROUBLESHOOTING OF TRAVELING SYSTEM

Symptom	Possible cause	Check points	Remedy
Traveling unable to do. Specified traveling speed unable to obtain. Lack of traveling force.	Hydraulic oil is not enough.	Check the hydraulic oil tank oil level.	Replenish hydraulic oil.
		Check the suction strainer for clogging.	Wash or replace the strainer.
	Malfunctioning of remote control valve	Check whether the secondary pressure generation is normal.	Replace the valve.
		Adjust the secondary pressure detection switch.	Replace the pressure switch.
	Malfunctioning of remote control circuit relief valve	Check the primary pressure.	Adjust the primary pressure or replace the valve.
		Check the function lock limit switch works.	Adjust movement of the limit switch or replace the limit switch.
		Check the function lock solenoid valve function.	Replace the solenoid valve.
	Defective traveling control valve	Check the main valve relief pressure.	Adjust the relief valve pressure or replace the relief
	Malfunctioning of travel motor	Check the piston for sticking or get out of place.	Check the piston movement and replace the part.
		Check the motor drain oil amount.	Replace the motor.
	Malfunctioning of travel reduction unit	Check for unusual noise, temperature and vibration.	Check the shaft, gear and bearing for unusual noise and seizure.
			Repair the shaft and bearing or replace parts.
		Check the gear oil level in the reduction unit.	Replenish gear oil or replace parts.

Reference Only

TROUBLESHOOTING OF TRAVELING SYSTEM

Symptom	Possible cause	Check points	Remedy
Shock is observed at starting/stopping of traveling motion. Traveling motion is not smooth.	Poor engagement of shoe with tumbler	Check engagement of the shoe with the tumbler and shoe overriding the tumbler.	Adjust tension of the shoe, repair the shoe or replace parts.
	Defective travel brake	Check whether the travel brake release pressure is normal or not.	Repair the travel brake valve or replace the valve.
		Check whether the pressure switch function is normal or not.	Repair the pressure switch wiring or replace the switch.
		Check the brake disk for unusual noise and high temperature.	Check the brake disk or replace the disk.
		Check the brake valve.	Replace the brake valve.
	Malfunctioning of remote control circuit relief valve	Check the primary pressure.	Adjust the primary pressure or replace the valve.
		Check the function lock limit switch works.	Adjust movement of the limit switch or replace the limit switch.
		Check the function lock solenoid valve function.	Replace the solenoid valve.
	Defective travel control valve	Check the main valve relief pressure.	Adjust the relief valve pressure or replace the relief valve.
		Check the valve spool movement.	Lapping or replace the spool.
	Malfunctioning of travel motor	Check the piston for sticking or get out of place.	Check the piston movement and replace the part.
		Check the motor drain oil amount.	Replace the motor.
	Malfunctioning of travel reduction unit	Check for unusual noise, temperature and vibration.	Check the shaft, gear and bearing for unusual noise and seizure.
			Repair the shaft and bearing or replace parts.
		Check the gear oil level in the reduction unit.	Replenish gear oil or replace parts.
	Defective electrical system	Check the fuse (F-15) for blowing as well as wiring.	Replace the fuse (F-15) or repair the wiring.
		Check the travel brake and low and high speed selector switch function.	Replace the switch or repair the wiring.
		Check the relay for switching and the contact points for burning mark.	Replace the relay or repair the wiring.
		Check the travel brake and low and high speed selector solenoid valve function.	Replace the solenoid valve or repair the wiring.

Reference Only

TROUBLESHOOTING OF TRAVELING SYSTEM

Symptom	Possible cause	Check points	Remedy
Travel brake ineffective.	Defective travel brake	Check whether the travel brake release pressure is normal or not.	Repair the travel brake valve or replace the valve.
		Check whether the pressure switch operation is normal or not.	Repair the pressure switch wiring or replace the switch.
		Check the brake disk for unusual noise and high temperature.	Check the brake disk or replace the disk.
		Check the brake valve.	Replace the brake valve.
	Defective electrical system	Check the travel brake and low and high speed selector switch works.	Replace the switch or repair the wiring.
		Check the relay for switching and the contact points for burning mark.	Replace the relay or repair the wiring.
		Check the travel brake and low and high speed selector solenoid valve function.	Replace the solenoid valve or repair the wiring.

Reference Only

Reference Only