GROVE®

GRT540

Product Guide

ASME B30.5 Imperial 85%

40 USt
(40 t)

32 ft - 102 ft
(9,8 m - 31 m)

GVW
64,890 lb
(29,248 kg)

max
154 ft
(47 m)

GROVE GRT540

FEATURES

- Four section, full-power boom – fast and simple operation, combined with best in class lifting performance.
- 26 ft to 45 ft (7,9 m to 13,7 m) telescopic offsettable boom extension provides additional reach and versatility to win more jobs.
- 12,240 lb (5552 kg) permissible line pull – less rigging, higher efficiency and productivity.
- Compact dimensions, 8.5 ft (2.55 m) wide chassis & lightweight GVW - easy transportation to the job & excellent maneuverability once on site.
- Full LED lighting package with 360° carrier lighting, boom work lights and exit lighting - maximum visibility at any time.
- MAXbase variable outrigger positioning system for increased lift capacities and easy access to any jobsite.
- oCSI (on Crane Service Interface) provides enhanced diagnostics and monitoring systems on-board for easy serviceability.
- Multiple site steering modes via the steering wheel provide simple operation when moving or positioning the crane on the job-site.

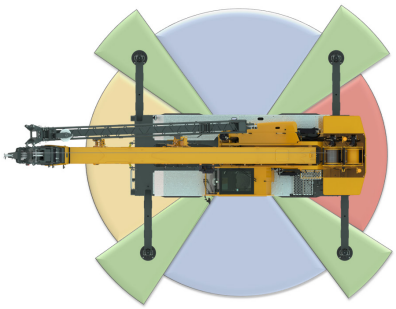

MAXbase variable outrigger positioning

MAXbase provides increased versatility on the jobsite by allowing asymmetrical outrigger spans. This makes it easier to work in congested jobsites with obstructions, and allows for increased capacities when comparing to the standard 360° load charts.

Backing up our promise

Our GRT line of Rough Terrain cranes have been designed from the ground up to provide class-leading specifications and have undergone extensive testing to ensure they provide industry-leading quality and reliability. We stand behind our GRT cranes and we're willing to prove it with a two-year standard warranty and available three, four or five-year extended warranty programs.

GRT540 GROVE. REAL. TOUGH.

New Cab with CCS 1+

The GRT540's new cab was designed with operator comfort, visibility and productivity in mind. Standard features include tilt/telescoping steering wheel, USB charging port, high output heating and air conditioning system, heated seat, heavy duty foot rest bars, LED cab work lights, and a three camera package. Also included is the new CCS 1+. The same Crane Control System you've come to expect on Grove Rough Terrain cranes, now on a single 12 inch (30.5 cm) touchscreen display. CCS 1+ provides simple, intuitive functionality for quick set-up and enhanced operation. New driving mode includes steering indication, fore and aft as well as side to side slope indication, travel speed and more.

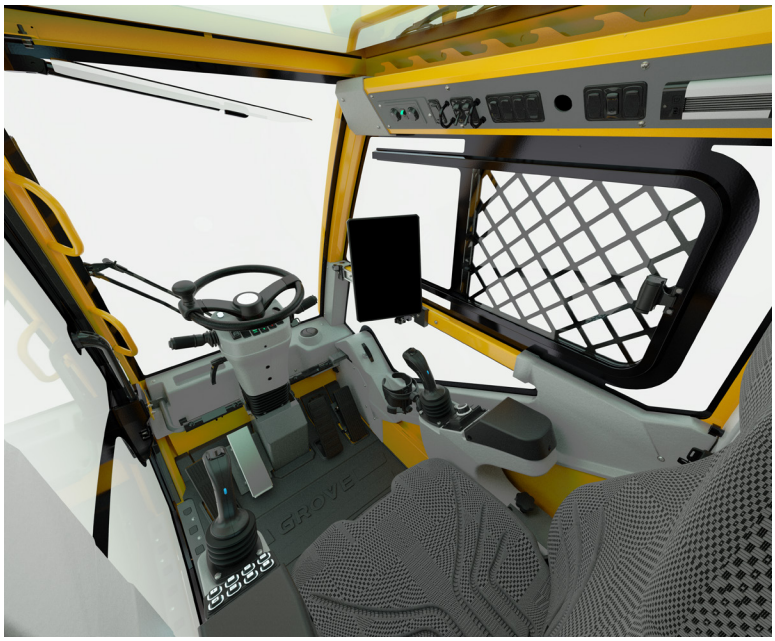

GROVE® CONNECT™

GROVE CONNECT transforms the user experience of crane owners and makes everyday work easier.

Get access to secure, accurate data with an easy and intuitive remote 'real time' view on your crane's operation.

Scan to learn more or visit manitowoc.com/support.

KEEP YOUR CRANE CONNECTED

Compact Dimensions

The GRT540's compact width of 8.5 ft (2.55 m) and low overall height of under 11 ft (3.35 m) make this crane ideal for sites with low clearance and narrow set up space. This combined with the new site steering controls for coordinated and crab steering make maneuvering easy! In addition, the GRT540's lightweight GVW of 64,890 lb (29,248 kg) allow for simplified transportation to and from the job site. Roll off the truck and go to work!

The world's most advanced crane service and support network

WORLDWIDE SUPPORT NETWORK

Manitowoc's customer service extends beyond any borders. Our locations span the globe, covering five continents. No matter where the job takes you, you have a business partner nearby.

PARTS

Locating the correct part quickly is vital to managing your operations. With Manitowoc Customer Support, the parts you need are just a phone call or click away.

LIFT SOLUTIONS

The Manitowoc Crane Lift Solutions Team is dedicated to helping customers with unique and customized applications for their Manitowoc cranes, regardless of product line.

TRAINING

Manitowoc Training Centers offer courses for operators and technicians across the globe to provide in-depth instruction on crane operation, maintenance, and troubleshooting procedures.

EnCORE

Manitowoc's EnCORE program maximizes your investment by rebuilding or repairing your crane to extend its life significantly. EnCORE also includes remanufactured parts.

MANITOWOC FINANCE

Manitowoc Finance gets you in the field with the right equipment by giving you access to flexible, affordable financing. With Manitowoc Finance, equipment can be acquired with virtually no cash outlay, and unlike traditional lending, our financial products don't affect bank lines of credit. Your capital resources remain intact for times when you need ready access to cash.

Competitive rates with flexible financing options and payment schedules put you in control.

Did you know? Manitowoc Finance can finance used Manitowoc cranes. You can also trade-in your used fleet for upgrade and get financed by Manitowoc Finance.

GROVE
GRT 540
GROVE
MID-EXTEND
MID-EXTEND
MID-EXTEND

CONTENTS

8
Dimensions

10
Weights

11
Working Range / Load Charts — Main Boom and Extensions

17
Load Handling

18
Specifications

DIMENSIONS

	Tire Size	A	B	C	D	E	F	G	H	J	K
2 WHEEL STEER	20.5 X 25	533 (13,535)	524 (13,300)	429 (10,899)	403 (10,236)	394 (10,007)	320 (8,138)	276 (7,021)	81 (2,055)	25°	23°
	16.0 X 25	533 (13,535)	524 (13,300)	429 (10,899)	401 (10,185)	393 (9,981)	320 (8,138)	276 (7,021)	82 (2,093)	25°	23°
4 WHEEL STEER	20.5 X 25	381 (9,657)	369 (9,350)	265 (6,732)	237 (6,010)	230 (5,832)	157 (4,000)	137 (3,498)	81 (2,055)	25°	23°
	16.0 X 25	381 (9,657)	369 (9,350)	265 (6,732)	237 (6,010)	229 (5,806)	157 (4,000)	137 (3,498)	82 (2,093)	25°	23°

Dimensions in inches (mm) unless otherwise specified.

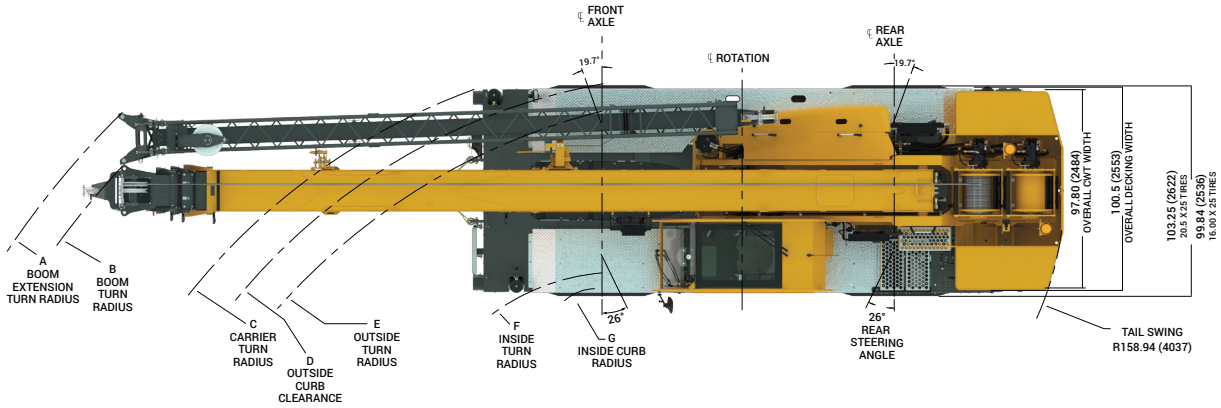

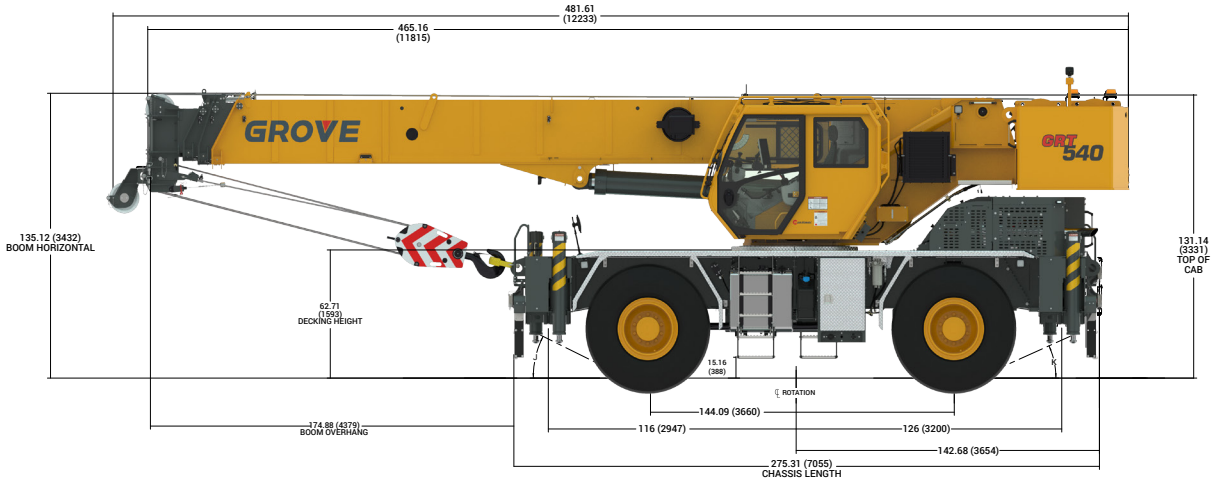

DIMENSIONS

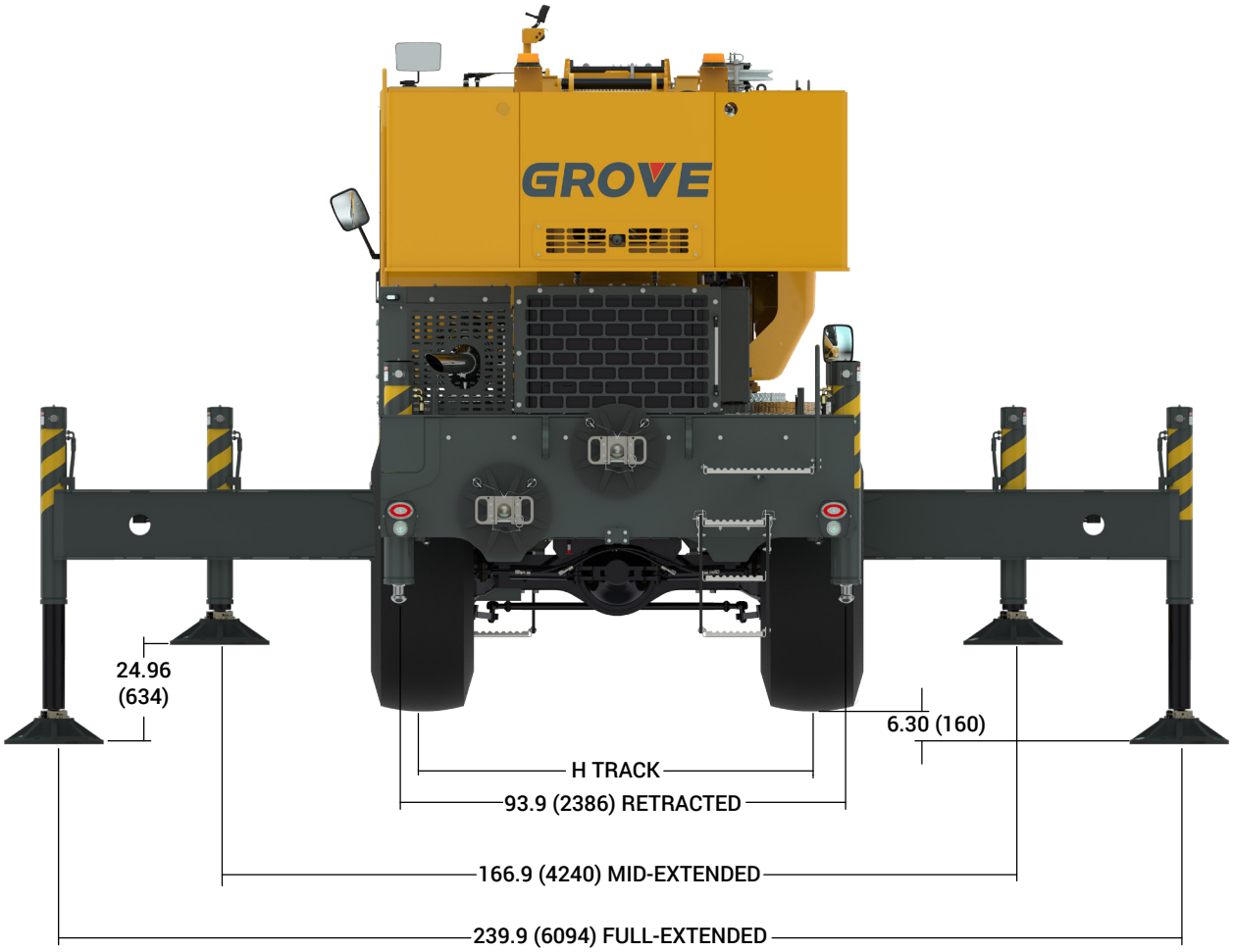
GROVE
24.96
(634)
6.30 (160)
H TRACK
93.9 (2386) RETRACTED
166.9 (4240) MID-EXTENDED
239.9 (6094) FULL-EXTENDED

WEIGHTS

Weights	GVW		Front		Rear	
	lb	kg	lb	kg	lb	kg
Basic crane with Cummins Stage V/T4F engine, 102 ft (31 m) main boom, main hoist with 452 ft (138 m) wire rope, 8,800 lbs. (3992 kg) standard counterweight and IPO counterweight	61,159	27,741	26,457	12,001	34,702	15,741
Add 45 ft (13.7 m) telescopic swingaway & stowage brackets	1,996	905	3,096	1,404	-1,100	-499
Crane Weight	63,155	28,647	29,553	13,405	33,602	15,242
Add Auxiliary hoist with 452 ft (138 m) wire rope	410	186	-188	-85	598	271
Crane Weight	63,565	27,927	29,365	11,915	34,200	16,012
Add Auxiliary boom nose	106	48	285	129	-179	-81
Crane Weight	63,671	28,695	29,650	13,534	34,021	15,160
Add 7.5 USt (7 t) overhaul ball	366	166	614	279	-248	-112
Crane Weight	64,037	28,861	30,264	13,813	33,773	15,048
Add 38USt (35 t) hookblock	853	387	923	419	-70	-32
Crane Weight	64,890	29,248	31,187	14,231	33,703	15,016

THIS CHART IS ONLY A GUIDE AND SHOULD NOT BE USED TO OPERATE THE CRANE.
The individual crane's load chart, operating instructions and other instructional plates must be read and understood prior to operating the crane

WORKING RANGE
Main Boom

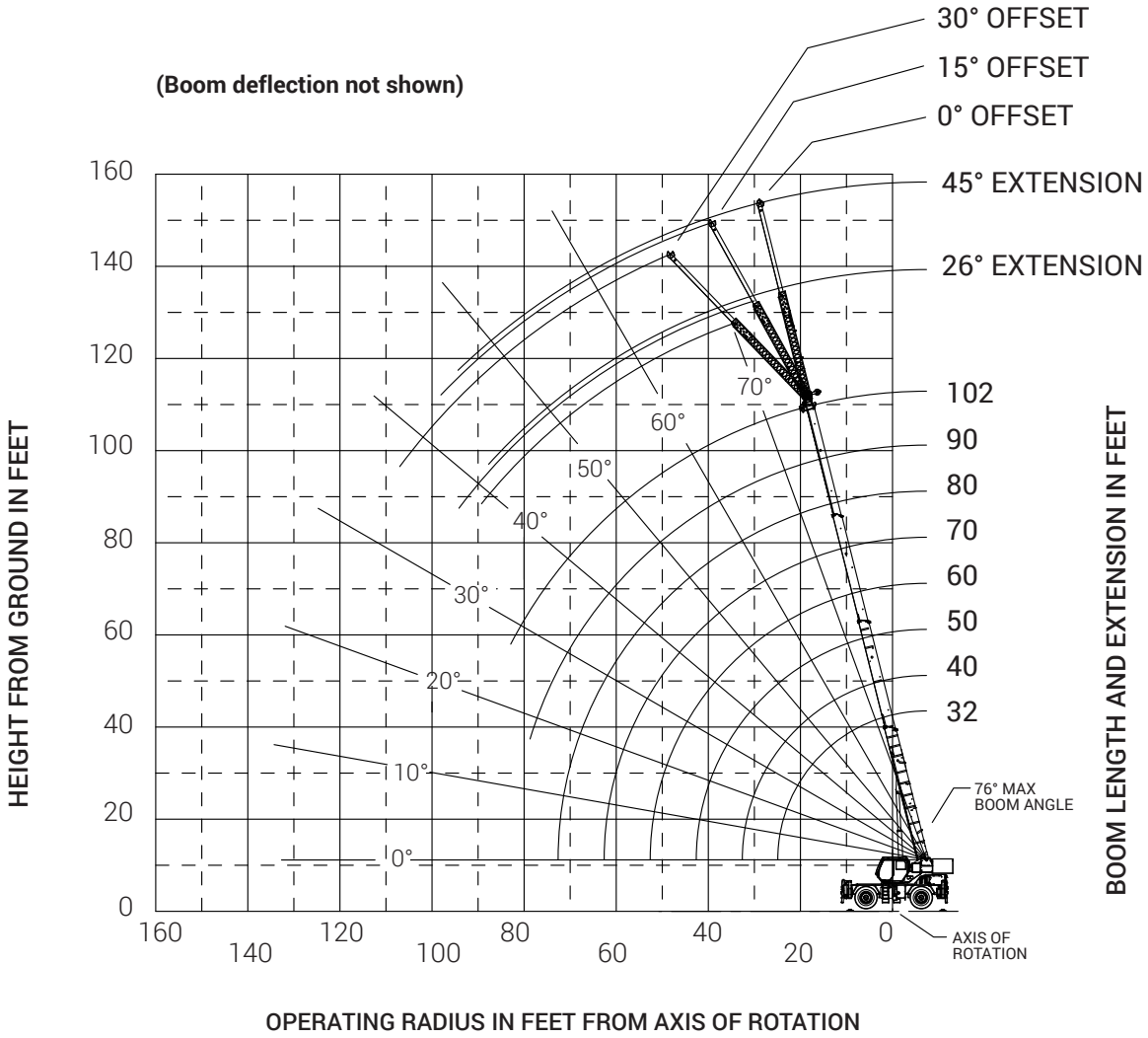

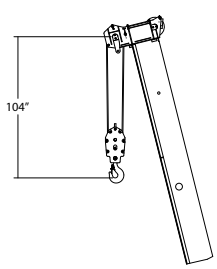

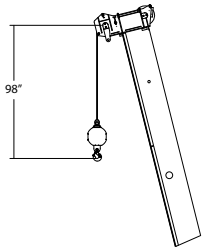

DIMENSIONS ARE FOR LARGEST GROVE FURNISHED HOOK BLOCK AND HEADACHE BALL, WITH ANTI-TWO BLOCK ACTIVATED.

THIS CHART IS ONLY A GUIDE AND SHOULD NOT BE USED TO OPERATE THE CRANE.
The individual crane's load chart, operating instructions and other instructional plates must be read and understood prior to operating the crane

LOAD CHART
Main Boom

32 ft - 102 ft | 8,800 lb | 100% | 360°

Pounds

Feet	Main boom length in feet							
	32	40	50	60	70	80	90	102
8	80,000 (66.5)	–	–	–	–	–	–	–
10	72,750 (62.5)	50,700 (68.5)	48,500 (73.5)	–	–	–	–	–
12	63,500 (58)	50,700 (65.5)	48,500 (71)	46,400 (75)	–	–	–	–
15	55,000 (51.5)	50,700 (60.5)	48,500 (67.5)	44,300 (72)	38,700 (75)	–	–	–
20	44,600 (37.5)	45,200 (51)	41,000 (60.5)	35,300 (66.5)	31,000 (71)	29,700 (74)	22,000 (76.5)	–
25	–	34,900 (40)	33,600 (53.5)	29,400 (61)	25,800 (66.5)	24,600 (70)	22,000 (73)	18,500 (75.5)
30	–	25,000 (25)	24,600 (45.5)	24,800 (55.5)	21,800 (61.5)	20,800 (66)	18,350 (69.5)	17,500 (72.5)
35	–	–	18,850 (36.5)	19,000 (49)	18,700 (56.5)	17,800 (62)	15,600 (66)	15,200 (69.5)
40	–	–	14,650 (23)	14,950 (41.5)	15,050 (51.5)	15,050 (57.5)	13,500 (62)	13,200 (66.5)
45	–	–	–	12,050 (33)	12,150 (45.5)	12,200 (53)	11,750 (58.5)	11,600 (63)
50	–	–	–	9,780 (20.5)	9,980 (39)	10,100 (48.5)	10,250 (54.5)	10,200 (60)
55	–	–	–	–	8,290 (31)	8,490 (43)	8,580 (50.5)	8,680 (56.5)
60	–	–	–	–	6,900 (20)	7,180 (37)	7,230 (46)	7,280 (53)
65	–	–	–	–	–	6,030 (29.5)	6,130 (41)	6,140 (49.5)
70	–	–	–	–	–	5,030 (19)	5,190 (35.5)	5,190 (45)
75	–	–	–	–	–	–	4,350 (28.5)	4,390 (40.5)
80	–	–	–	–	–	–	3,640 (18.5)	3,700 (35)
85	–	–	–	–	–	–	–	3,100 (29)
90	–	–	–	–	–	–	–	2,560 (21.5)
Min. boom angle for indicated length (no load)								0°
Max. boom length at 0° boom angle (no load)								102 ft

#RCL operating code. Refer to RCL manual for operating instructions.
NOTE: ( ) Boom angles are in degrees.

Boom angle	Main Boom Length in Feet							
	32	40	50	60	70	80	90	102
0°	15,000 (24.9)	11,450 (32.6)	7,930 (42.6)	5,640 (52.6)	4,020 (62.6)	2,880 (72.6)	1,960 (82.6)	1,500 (94.3)

NOTE: ( ) Reference radii in feet.

THIS CHART IS ONLY A GUIDE AND SHOULD NOT BE USED TO OPERATE THE CRANE.
The individual crane's load chart, operating instructions and other instructional plates must be read and understood prior to operating the crane

LOAD CHART
Main Boom - MAXbase

32 ft - 102 ft | 8,800 lb | 100% | 360° | MAXbase

Pounds

Feet	Main boom length in feet							
	32	40	50	60	70	80	90	102
10	72,750 (62.5)	50,700 (68.5)	48,500 (73.5)	–	–	–	–	–
12	63,500 (58.5)	50,700 (65.5)	48,500 (71.5)	46,400 (75)	–	–	–	–
15	55,000 (51.5)	50,700 (60.5)	48,500 (67.5)	44,300 (72)	38,700 (75)	–	–	–
20	44,600 (37)	45,200 (51.5)	41,000 (61)	35,300 (66.5)	31,000 (71)	29,700 (74)	22,000 (76.5)	–
25	–	35,700 (40.5)	33,800 (53.5)	29,400 (61)	25,800 (66.5)	24,600 (70)	22,000 (73)	18,500 (75.5)
30	–	27,150 (25.5)	27,850 (45.5)	24,800 (55.5)	21,800 (61.5)	20,800 (66)	18,350 (69.5)	17,500 (72.5)
35	–	–	21,450 (36)	21,400 (49)	18,700 (56.5)	17,800 (62)	15,600 (66)	15,200 (69.5)
40	–	–	16,950 (23)	17,350 (42)	16,300 (51.5)	15,500 (57.5)	13,500 (62)	13,200 (66.5)
45	–	–	–	14,100 (33)	14,300 (45.5)	13,600 (53)	11,750 (58.5)	11,600 (63)
50	–	–	–	11,600 (21)	11,800 (39)	11,950 (48)	10,350 (54.5)	10,200 (60)
55	–	–	–	–	9,860 (31)	10,050 (42.5)	9,170 (50)	9,040 (56.5)
60	–	–	–	–	8,250 (19.5)	8,440 (36.5)	8,170 (45.5)	8,050 (52.5)
65	–	–	–	–	–	7,120 (29)	7,250 (40.5)	7,190 (49)
70	–	–	–	–	–	6,010 (18.5)	6,140 (34.5)	6,250 (44.5)
75	–	–	–	–	–	–	5,190 (27.5)	5,300 (40)
80	–	–	–	–	–	–	4,370 (18)	4,480 (35)
85	–	–	–	–	–	–	–	3,770 (29)
90	–	–	–	–	–	–	–	3,140 (21)
Min. boom angle for indicated length (no load)								0°
Max. boom length at 0° boom angle (no load)								102 ft

Boom angle	Main Boom Length in Feet							
	32	40	50	60	70	80	90	102
0°	15,000 (24.9)	11,450 (32.6)	7,930 (42.6)	5,640 (52.6)	4,020 (62.6)	2,880 (72.6)	1,960 (82.6)	1,500 (94.3)

NOTE: ( ) Reference radii in feet.

THIS CHART IS ONLY A GUIDE AND SHOULD NOT BE USED TO OPERATE THE CRANE.
The individual crane's load chart, operating instructions and other instructional plates must be read and understood prior to operating the crane

LOAD CHART
Manual Extension

102 ft | 26 ft - 45 ft | 8,800 lb | 100% | 360°

Pounds

Feet	26 ft length			45 ft length		
	0° offset	15° offset	30° offset	0° offset	15° offset	30° offset
35	10,200 (75)	–	–	–	–	–
40	9,460 (73)	7,770 (75)	–	5,250 (76)	–	–
45	8,760 (70.5)	7,370 (72.5)	6,030 (75)	5,250 (74)	–	–
50	8,150 (68)	6,870 (70)	5,780 (72.5)	5,050 (72)	3,660 (75.5)	–
55	7,510 (65.5)	6,050 (67.5)	5,520 (70)	4,650 (70)	3,540 (73.5)	–
60	6,700 (63)	5,350 (64.5)	5,290 (67)	4,290 (68)	3,430 (71.5)	3,000 (75)
65	5,990 (60)	4,740 (62)	4,810 (64.5)	4,000 (65.5)	3,320 (69)	2,890 (73)
70	5,290 (57.5)	4,210 (59.5)	4,270 (61.5)	3,800 (63.5)	3,220 (67)	2,790 (70.5)
75	4,460 (54.5)	3,750 (56.5)	3,800 (58.5)	3,650 (61)	3,130 (64.5)	2,700 (68)
80	3,750 (51.5)	3,330 (53.5)	3,380 (55.5)	3,520 (58.5)	3,000 (62)	2,620 (65.5)
85	3,130 (48.5)	2,960 (50)	3,010 (52.5)	3,360 (56)	2,880 (59.5)	2,550 (63)
90	2,590 (45)	2,630 (47)	2,670 (49)	3,030 (53.5)	2,770 (57)	2,480 (60.5)
95	2,110 (41.5)	2,240 (43.5)	2,360 (45)	2,730 (51)	2,680 (54.5)	2,410 (57.5)
100	1,680 (37.5)	1,790 (39.5)	1,930 (41)	2,450 (48)	2,570 (51.5)	2,380 (55)
105	1,300 (33)	1,390 (35)	1,510 (36.5)	2,090 (45)	2,330 (48.5)	2,310 (51.5)
110	–	1,030 (30)	–	1,740 (42)	1,950 (45.5)	2,140 (48.5)
115	–	–	–	1,430 (38.5)	1,610 (42)	1,770 (44.5)
120	–	–	–	1,150 (35)	1,290 (38)	1,430 (40.5)
125	–	–	–	–	1,010 (34)	1,120 (36)
Min. boom angle for indicated length (no load)	32°	29°	35.5°	34°	33°	35°
Max. boom length at 0° boom angle (no load)	70 ft	N/A		70 ft	N/A	

#RCL operating code. Refer to RCL manual for operating instructions.

NOTE: ( ) Boom angles are in degrees.

1. 26 ft and 45 ft folding boom extension lengths may be used for single line lifting service only.
2. Radii listed are for a fully extended boom with the boom extension erected. For main boom lengths less than fully extended, the rated loads are determined by boom angle. Use only the column which corresponds to the boom extension length and offset for which the machine is configured. For boom angles not shown, use the rating of the next lower boom angle..
3. WARNING: Operation of this machine with heavier loads than the capacities listed is strictly prohibited. Machine tipping with boom extension occurs rapidly and without advance warning.
4. Boom angle is the angle above or below horizontal of the longitudinal axis of the boom base section after lifting rated load.
5. Capacities listed are with outriggers properly extended and vertical jacks set only.
6. When lifting over the main boom nose with 26 ft or 45 ft extension erected, the outriggers must be fully extended.

THIS CHART IS ONLY A GUIDE AND SHOULD NOT BE USED TO OPERATE THE CRANE.
The individual crane's load chart, operating instructions and other instructional plates must be read and understood prior to operating the crane

LOAD CHART
Pick and Carry

32 ft - 60 ft

8,800 lb

Pick and carry up to 1 mph
20.5 x 25 tires

Boom centered over front

Radius in feet	Main Boom Length in Feet			
	32	40	50	60
10	25,000 (62.4)	19,200 (68.5)	–	–
12	21,550 (58.1)	17,500 (65.2)	–	–
15	18,100 (51.1)	17,000 (60.2)	17,000 (66.9)	–
20	14,650 (37.1)	13,100 (51.1)	13,100 (60.3)	12,800 (65.9)
25	–	9,860 (40.3)	9,860 (53.2)	9,800 (60.4)
30	–	7,440 (25.3)	7,440 (45.2)	7,400 (54.5)
35	–	–	5,930 (35.6)	5,900 (48.1)
40	–	–	4,560 (22.3)	4,500 (40.9)
45	–	–	–	4,000 (32.3)
50	–	–	–	3,200 (20.2)
Minimum boom angle (°) for indicated length (no load)				0°
Maximum boom length at 0° boom angle (no load)				60 ft

#RCL operating code. Refer to RCL manual for operating instructions.
NOTE: ( ) Boom angles are in degrees

1. Capacities are in pounds and do not exceed 75% of tipping loads as determined by test in accordance with SAE J765.
2. Capacities are applicable to machines equipped with Maitech MT211 E-3/L-3 - 20.5x25 (24 ply) at 76 psi (5.24 BAR), or 16.00x25 tires (32 ply) at 127 psi (8.75 BAR).
3. Capacities are applicable only with machine on firm level surface.
4. On rubber lifting with boom extension not permitted.
5. For pick and carry operation, boom must be centered over front of machine, mechanical swing lock engaged and load restrained from swinging.
6. Axle lockouts must be functioning when lifting on rubber.
7. All lifting depends on proper tire inflation, capacity and condition. Capacities must be reduced for lower tire inflation pressures. See lifting capacity chart for tire used. Damaged tires are hazardous to safe operation of crane.
8. Creep — not over 200 ft of movement in any 30 minute period and not exceeding 1 mph.

Boom angle	Main Boom Length in Feet			
	32	40	50	60
0°	11,250 (24.9)	6,170 (32.6)	3,840 (42.6)	2,780 (52.6)

NOTE: ( ) Reference radii in feet.

THIS CHART IS ONLY A GUIDE AND SHOULD NOT BE USED TO OPERATE THE CRANE.
The individual crane's load chart, operating instructions and other instructional plates must be read and understood prior to operating the crane

LOAD CHART
Stationary

32 ft - 60 ft | 8,800 lb | Stationary | 360°

Radius in feet	Main Boom Length in Feet			
	32	40	50	60
10	24,500 (62.4)	24,500 (68.5)	–	–
12	21,600 (58.1)	21,600 (65.2)	21,600 (70.7)	21,600 (74.2)
15	15,450 (51.1)	16,000 (60.2)	16,500 (66.9)	14,000 (71.1)
20	9,150 (37.1)	9,840 (51.1)	10,250 (60.3)	10,750 (65.9)
25	–	6,360 (40.3)	6,740 (53.2)	7,230 (60.4)
30	–	4,180 (25.3)	4,540 (45.2)	4,920 (54.5)
35	–	–	3,030 (35.6)	3,340 (48.1)
40	–	–	1,930 (22.3)	2,190 (40.9)
45	–	–	–	1,320 (32.3)
Minimum boom angle (°) for indicated length (no load)				31.3°
Maximum boom length at 0° boom angle (no load)				50 ft

NOTE: ( ) Boom angles are in degrees.
*This capacity is based on maximum boom angle.

1. Capacities are in pounds and do not exceed 75% of tipping loads as determined by test in accordance with SAE J765.
2. Capacities are applicable to machines equipped with Maitech MT211 E-3/L-3 - 20.5x25 (24 ply) at 76 psi (5.24 BAR), or 16.00x25 tires (32 ply) at 127 psi (8.75 BAR).
3. Capacities are applicable only with machine on firm level surface.
4. On rubber lifting with boom extension not permitted.
5. For pick and carry operation, boom must be centered over front of machine, mechanical swing lock engaged and load restrained from swinging.
6. Axle lockouts must be functioning when lifting on rubber.
7. All lifting depends on proper tire inflation, capacity and condition. Capacities must be reduced for lower tire inflation pressures. See lifting capacity chart for tire used. Damaged tires are hazardous to safe operation of crane.
8. Creep — not over 200 ft of movement in any 30 minute period and not exceeding 1 mph.

Boom angle	Main Boom Length in Feet			
	32	40	50	60
0°	5,590 (24.9)	3,330 (32.6)	1,470 (42.6)	–

NOTE: ( ) Reference radii in feet.

THIS CHART IS ONLY A GUIDE AND SHOULD NOT BE USED TO OPERATE THE CRANE.
The individual crane's load chart, operating instructions and other instructional plates must be read and understood prior to operating the crane

LOAD HANDLING

Weight reductions for load handling devices		
Item	**Weight (lb)**	**Weight (kg)**
Auxiliary Boom Nose	106	48
40 USt (36 t) hookblock	1301	590
38 USt (35 t) hookblock	853	387
18.7 USt (17 t) hookblock	800	363
8.3 USt (7.5 t) overhaul weight	364	165
7.5 USt (7 t) overhaul weight	366	166

+Refer to rating plate for actual weight.

Telescopic Boom Extension	Without Overhaul Weight or Block	With 366 lb (166 kg) Overhaul Weight
*26 ft (7.9 m)	3300 lb (1497 kg)	4400 lb (1996 kg)
*45 ft (13.7 m)	4325 lb (1962 kg)	6000 lb (2449 kg)

*Reduction of main boom capacities (no deduct required for stowed boom extension)

NOTE: All load handling devices and boom attachments are considered part of the load and suitable allowances MUST BE MADE for their combined weights. Weights are for Grove furnished equipment.

NOTE: When operating at temperatures below -40°F, capacities shall be derated 3.6% of rated load for each degree Fahrenheit below -40°F without shock load.

Tire inflation - PSI (bar)				
MFG/ Model	**Size (front &rear)**	**Load Range**	**TRA Code**	**Lifting service, general travel, & extended travel**
				Static, creep & 2.5 mph (4.0 km/h)
Maitech/Mt211	20.5 X 25	24 Pr	E-3/L-3	76 (5.2)
Maitech/Mt211	16.0 X 25	32 Pr	E-3/L-3	127 (8.8)

Line pulls and reeving information			
Hoists	Cable Specs.	Permissible Line Pulls	Nominal Cable Length
Main	5/8 in. (16 mm) 35x7 Class EEIPS+ Rotation Resistant (non-rotating) Min. Breaking Strength 61,200 lb (27760 kg)	12,240 lb (5552 kg)*	452 ft (138 m)
Auxiliary	5/8 in. (16 mm) 35x7 Class EEIPS+ Rotation Resistant (non-rotating) Min. Breaking Strength 61,200 lb (27760 kg)	12,240 lb (5552 kg)*	452 ft (138 m)
Main & Auxiliary	5/8 in. (16 mm) 35x7 Class EEIPS+ Rotation Resistant (non-rotating) Min. Breaking Strength 61,200 lb (27760 kg)	12,240 lb (5552 kg)*	590 ft (180 m)

The approximate weight of 5/8 in. (16 mm) wire rope is .90 lb/ft (1.34 kg/m).
*With certain boom and hoist tackle combinations, the allowable line pull may be limited by hoist performance. Refer to Hoist Performance table for lift planning to ensure adequate hoist performance on drum rope layer required.

Hoist Performance				
Wire rope layer	Hoist line pulls		Drum capacity	
	Two speed hoist			
	Low	High	Layer	Total
	Available*	Available*		
1	15,900 lb (7200 kg)	7,700 lb (3490 kg)	93 ft (28,3 m)	93 ft (28,3 m)
2	14,700 lb (6670 kg)	7,200 lb (3270 kg)	101 ft (31,8 m)	194 ft (59,1 m)
3	13,700 lb (6210 kg)	6,700 lb (3040 kg)	108 ft (32,9 m)	302 ft (92,0 m)
4	12,900 lb (5850 kg)	6,300 lb (2860 kg)	115 ft (35,1 m)	417 ft (127,1 m)
5	12,100 lb (5490 kg)	5,900 lb (2680 kg)	122 ft (37,2 m)	539 ft (164,3 m)
6	11,400 lb (5170 kg)	5,600 lb (2540 kg)	130 ft (39,6 m)	669 ft (203,9 m)

*Refer to Line Pulls and Reeving Information table for max. lifting capacity of wire rope.

Working Area Diagram

Diagram for lifting on tires

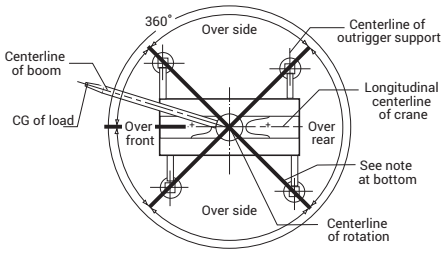

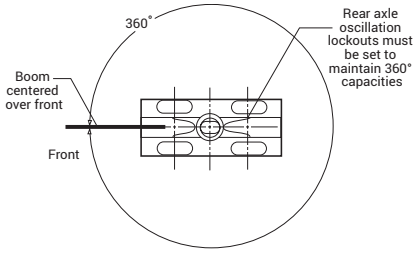

THIS CHART IS ONLY A GUIDE AND SHOULD NOT BE USED TO OPERATE THE CRANE.
The individual crane's load chart, operating instructions and other instructional plates must be read and understood prior to operating the crane

SPECIFICATIONS

Superstructure

Boom
32 ft – 102 ft (9.8 m – 31 m) four-section, synchronized, full-power boom.
Maximum tip height: 110.2 ft (33.6 m).

Telescopic swingaway extension*
26 ft – 45 ft (7.9 m – 13.7 m) telescopic swingaway extension. Offsettable at 0°, 15°, and 30°.
Stows alongside base boom section. Maximum tip height: 154 ft (47 m).

Boom nose
Four nylatron sheaves mounted on heavy-duty tapered roller bearings with removable pin-type guards.
Quick-reeve type boom nose.

Boom elevation
One double-acting hydraulic cylinder with integral holding valve provides elevation from -3° to +79°.

Crane Control System (CCS) 1+
Rated Capacity Limiter (RCL) with 12 in. (30.5 cm) graphical display with operation via touch screen or the armrest mounted jog dial keypad. Load moment and anti-two block system with audio-visual warning and control lever lockout. This system provides electronic display of boom angle, boom length, load radius, boom tip height, maximum permissible load, actual load, and warning of impending two-block condition. Also displays the crane operating indicators, levels, warnings, and faults. Other features include a Working Range Limiter (WRL) which allows the operator to preselect and define working areas. If the crane approaches the operator's preset limits, audio-visual warnings or function lockouts aid the operator in avoiding obstructions. ECO mode system to control engine rpm to lower noise and improve fuel consumption. Driving mode provides steering indication, fore/aft as well as side to side slope indication and travel speed.

Counterweight
8,800 lb (3992 kg) one-piece counterweight, pinned to superstructure.

Cab
Anti-corrosive steel structure with acoustical lining and tinted safety glass throughout. Premium heated seat with armrest mounted dual-axis electric programmable controllers, engine and operating functions displayed via CCS 1+ operator display with multiple sub-menu availability, tilt / telescoping steering wheel, air conditioning, hot water cab heater, electric horn, windshield washer/wiper, defroster, safety skylight with wiper, sunscreen, fire extinguisher, seat belt, dual cab mounted LED work lights, USB charging port, windshield sun visor and pivoting cup holder. Three camera system for visibility of rear, right side and hoists via CCS 1+ display.

Swing
Variable speed, 360° continuous rotation. Planetary drive with foot actuated multi-disc brake. Spring applied, hydraulically released swing brake. Plunger-type, two position house lock, operated from cab.

Hoist (main and optional auxiliary hoist)
Equipped with grooved drum, two speed power up and down with automatic multi-disc brake. Electronic hoist drum rotation indicator alerts operator of hoist movement. Third wrap indictor with hoist function cut-out, hoist cable follower, hoist access platform and hoist camera are standard.

Maximum hoist single line pull:
1st layer: 15,890 lb (7,208 kg)
3rd layer: 13,750 lb (6,237 kg)
5th layer: 12,115 lb (5,495 kg)

Maximum permissible single line pull: 12,240 lb (5,552 kg) with 35 x 7 class rope
Maximum hoist single line speed (no load): 549 ft/min (167 m/min)
Rope construction: 35 x 7 EEIPS+ rotation – resistant
Rope diameter: 5/8 in (16 mm)
Rope length: Main & Aux hoist: 452 ft (138 m)

* Denotes optional equipment

SPECIFICATIONS

Carrier

Chassis
Box section frame is fabricated from high strength, low alloy steel. Front and rear combination lift, tie-down and towing lugs.

Outrigger system
Four hydraulic telescoping single-stage double box beam outriggers with inverted jacks and integral holding valves. Three position settings, 0%, 50%, and fully extended. Outrigger Monitoring System (OMS) with in-cylinder sensors. Outrigger beam position shown on RCL display. Polymer outrigger floats 19.6 in (500 mm) diameter. Maximum outrigger pad load: 67,245 lb (30,500 kg).

Outrigger controls
Main controls and digital level shown on operating display in cab. Extension and retraction are through the CCS system. Includes automatic leveling feature.

Hydraulic system
Load sensing, variable displacement piston pump. Output capacity of 265 L/min (89 gal/min). Maximum operating pressure: 276 bar (4000 psi). Return line in-tank filter with full flow bypass protection and service indicator. Oil cooler with thermostatically controlled electric motor driven fan / air to oil. System pressure test ports.

Engine (Tier 3)
Cummins QSB6.7L diesel engine without aftertreatment system.
Six-cylinder, turbo-charged and water-cooled engine. 160 HP (119 kw) at 2,500 rpm.
Maximum torque: 539 lb-ft (731 Nm) at 1500 rpm.
Fuel requirement: Maximum of 5000 ppm sulfur diesel fuel.
Please review your country's appropriate engine emissions standards before selecting an engine.

Engine (Tier 4 Final/Stage V)
Cummins B6.7L diesel engine with after-treatment system. Six-cylinder, turbo-charged and water-cooled engine. 129 kw (173 HP) at 2,200 rpm. Maximum torque: 881 Nm (650 lb-ft) at 1500 rpm. Meets emissions per U.S. EPA Tier 4 Final and E.U. Stage V.
Fuel requirement: Maximum of 15 ppm sulfur content (ultra-low sulfur diesel). Diesel exhaust fluid required. Please review your country's appropriate engine emissions standards before selecting an engine.

Fuel tank capacity
59 gal (225 L)

Transmission
Rangeshift with six forward and six reverse speeds. (Three speeds high and three speeds low). Front axle disconnect for 4 x 2 drive.

Axles
FRONT: Drive / steer with differential and planetary reduction hubs rigid mounted to frame.
REAR: Drive / steer with differential and planetary reduction hubs pivot mounted to frame with integrated 5th wheel. Automatic full hydraulic lockouts on rear axle permits 5° of oscillation only with boom centered over the front. Cab controlled, cross axle differential locks (front and rear) standard.

Brakes
Dual line, dry disc, full hydraulic braking system with spring applied-hydraulic released high pressure parking brake mounted on front axle. Engine brake standard.

Steering
Fully independent power steering. 4 steering modes, front only, rear only, coordinated and crab with site steering via steering wheel. Steering indication shown via graphical display in cab.

Tires
20.5 x 25 – 24 bias ply rating.

Electrical system
Two 12 V maintenance-free batteries with disconnect. 24 V system / 24 V lighting.

Lighting
Full LED lighting package including turn indicators; head, tail, brake and hazard warning lights; carrier side mounted work lights and work lights mounted on cab front.

Maximum Drive Speed
18.5 mph (29.5 km/h).

Gradeability (theoretical)
Gradeability (theoretical) 75.9% to drive train stall based on 64,890 lbs. (29,248 kg). GVW with 20.5 x 25 tires, counterweight, auxiliary hoist, and bi-fold extension.

SPECIFICATIONS

Miscellaneous standard equipment

Full length aluminum decking, dual rear-view mirrors, hook block tie-down, electronic back-up alarm, front stowage well, hot water cab heater / defroster, cab air conditioner, multi-function hour meter, A/V warning system, combination lift/tie-down/towing lugs, coolant sight level indicator and hoist access platform, coolant sight level indicator and hoist access platform.

Optional equipment

- **Auxiliary Hoist Package:** Includes auxiliary hoist with electronic hoist drum rotation indicator, hoist drum cable follower, third wrap indicator, 138 m (452 ft) of 16 mm (5/8 in.) of rotation resistant wire rope.
- **Auxiliary Lighting and Convenience Package:** Includes superstructure-mounted amber flashing beacon, dual base boom-mounted LED work lights and rubber mat for storage trough.
- 7.9 m – 13.7 m (26 ft – 45 ft) telescoping offsettable swingaway extension
- 360° positive swing lock
- Rear pintle hitch
- Wireless wind speed indicator
- Boom mounted, boom position indicator light
- MAXbase - variable outrigger positioning system
- Bluetooth / AM / FM radio
- Vertical RCL light tower
- Emergency stop buttons on each side of carrier
- Automatic lubrication of superstructure
- Swing alarm
- Superstructure lighting package
- 16.00 x 25 -32 bias ply tires
- Refinery kit
- -29C / -20F cold weather package
- -40C / -40F arctic weather package

NOTES

NOTES

NOTES

The Manitowoc Company, Inc.

Regional headquarters

Americas
Milwaukee, Wisconsin, USA
Tel: +1 414 760 4600

Shady Grove, Pennsylvania, USA
Tel: +1 717 597 8121

Europe and Africa
Dardilly, France - TOWERS
Tel: +33 (0) 4 72 18 20 20

Wilhelmshaven, Germany - MOBILE
Tel: +49 (0) 4421 294 0

APAC
Shanghai, China
Tel: +86 21 6457 0066

Singapore
Tel: +65 6264 1188

Middle East and India
Dubai, UAE
Tel: +971 4 8862677

© 2026 The Manitowoc Company, Inc.

Form No. GRT540 PG
Part No. 1150.26-006-GU/.025M/1026

This document is non-contractual. Constant improvement and engineering progress make it necessary that we reserve the right to make specification, equipment, and price changes without notice. Illustrations shown may include optional equipment and accessories and may not include all standard equipment.

manitowoc.com