BILL OF MATERIAL						
ITEM NO./ NO. REQD.	SEC-TION	DESCRIPTION	LENGTH IN.	MATERIAL	CODE NO. OR DWG. NO	ASSEMBLIES USED ON

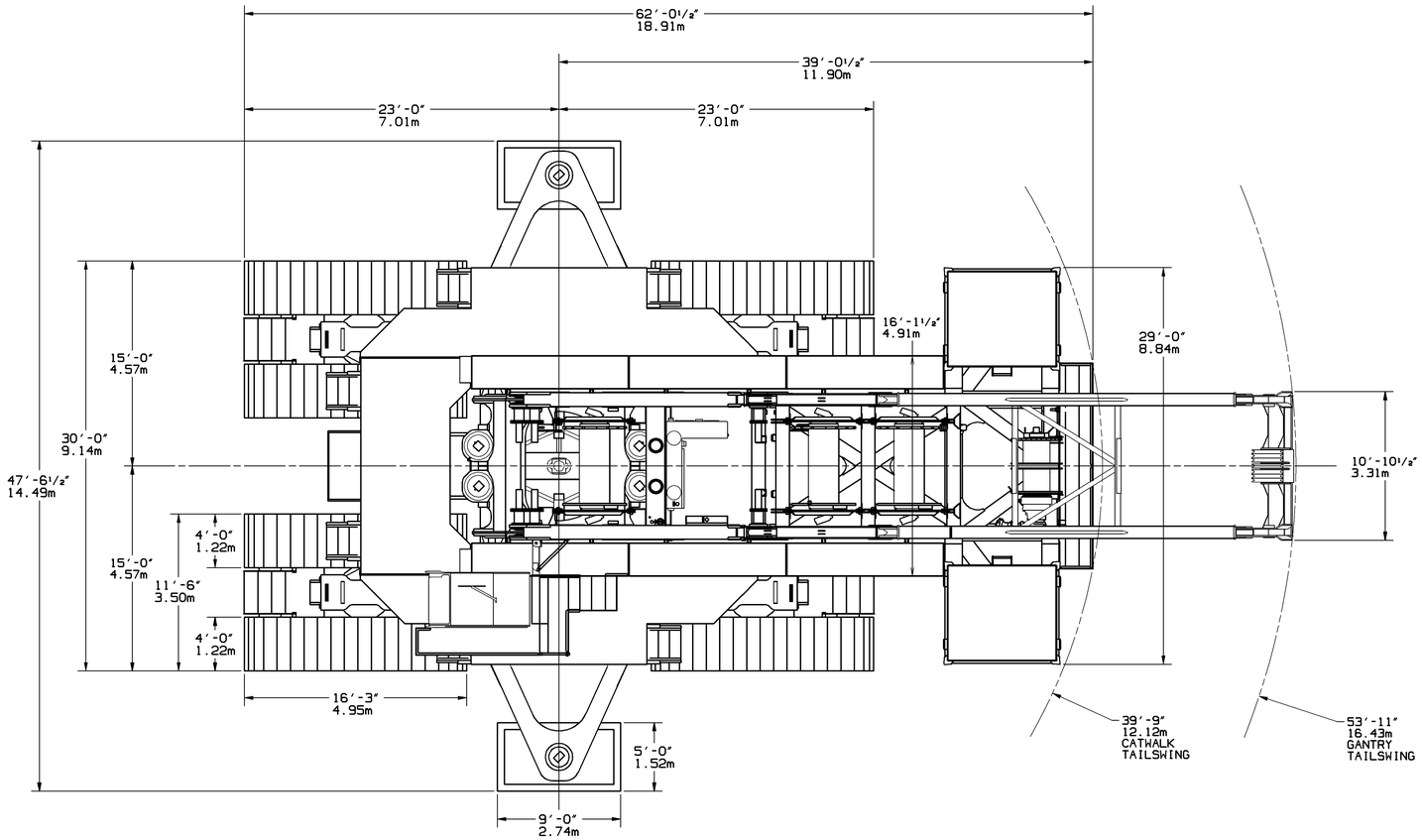

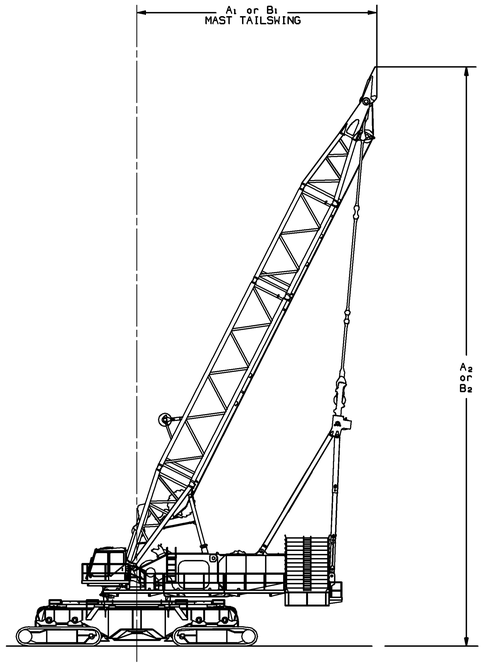

MACHINE WITH 100'(30.48m) MAST
A_1= 45'-8"(13.92m)
A_2= 110'-3"(33.60m)

B MACHINE WITH 140'(42.67m) MAST
B_1= 63'9-1/2"(19.46m)
B_2= 145'-10-1/2"(44.47m)

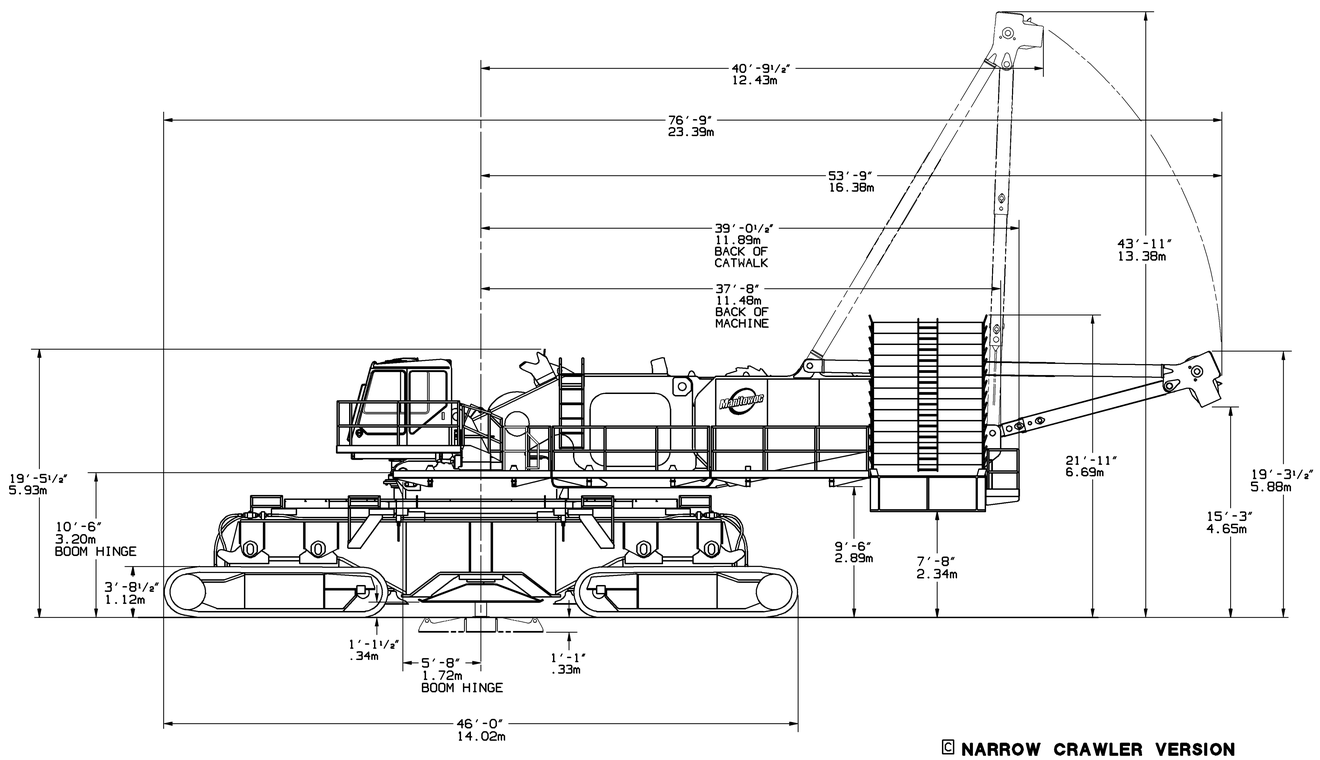

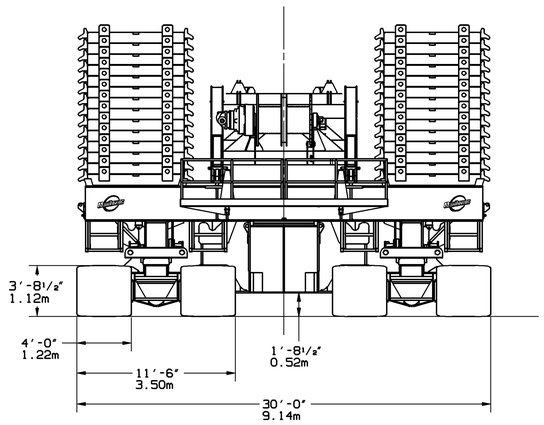

C NARROW CRAWLER VERSION

REVISIONS
12-14-99 RAW
A WAS 1 OF 2
B 140'MAST ADDED
C ADDED TITLE

DWG. NO.
194237
SHT.1 OF 3

THIS PRINT REMAINS THE PROPERTY OF MANITOWOC CRANES, INC. ALL INFORMATION CONTAINED THEREON IS CONFIDENTIAL. IT IS LOANED, SUBJECT TO RETURN UPON DEMAND, AND ON EXPRESS CONDITION THAT IT IS NOT TO BE COPIED OR USED DIRECTLY OR INDIRECTLY IN ANY WAY WHATSOEVER DETRIMENTAL TO OUR INTERESTS.

TOLERANCE UNLESS OTHERWISE SPECIFIED			
DECIMAL PLACES	FABRICATION		MACHINING
	± 10 FEET	> 10 FEET	
(1) PLACE 0.0	±.120	±.180	±.030
(2) PLACE 0.00	±.060	±.120	±.015
(3) PLACE 0.000			±.005
ANGLES	±1°30'		±0°30'

MACHINING TOLERANCE APPLIES TO ALL DIMENSIONS TO THE MACHINED SURFACE

SCALE 1/4"=1'
DR. RAW
CK. MF
APP SHL

Manitowoc Cranes, Inc.
Manitowoc, Wisconsin
MODEL 21000

OUTLINE DIMENSION
CRANE AND MAX-ER

DATE 06-21-99
PATTERN NO.
DWG. NO. 194237

DO NOT SCALE THIS DRAWING

A SHT.1 OF 3

BILL OF MATERIAL						
ITEM NO./ NO. REQD.	SEC-TION	DESCRIPTION	LENGTH IN.	MATERIAL	CODE NO. OR DWG. NO	ASSEMBLIES USED ON

REVISIONS
12-14-99 RAW
A WAS 2 OF 2
B 140' MAST ADDED
C TITLE ADDED

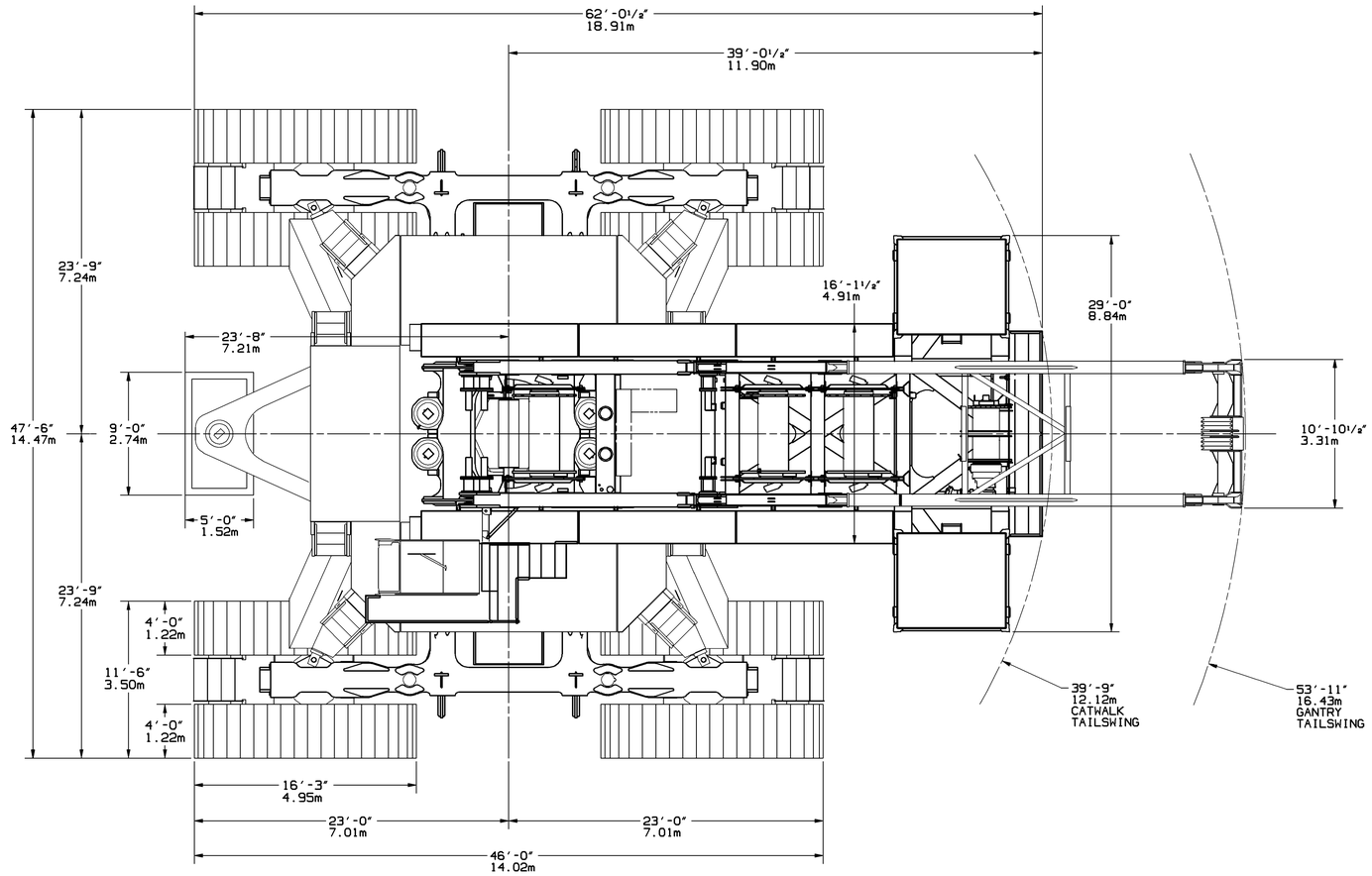

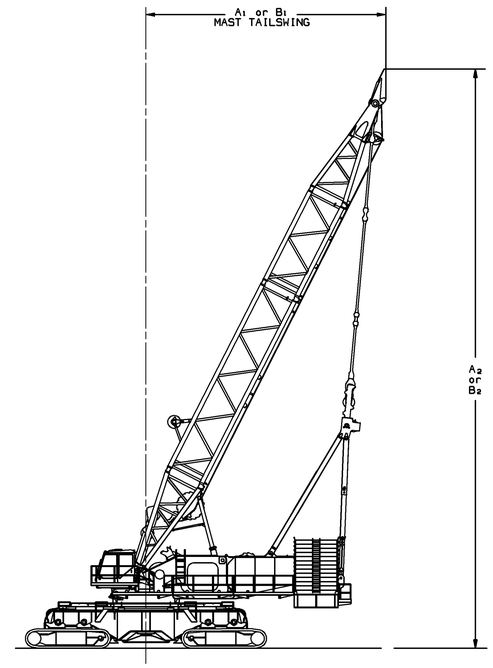

MACHINE WITH 100'(30.48m) MAST
A_1 = 45'-8"(13.92m)
A_2 = 110'-3"(33.60m)

B MACHINE WITH 140'(42.67m) MAST
B_1 = 63'9-1/2"(19.46m)
B_2 = 145'-10-1/2"(44.47m)

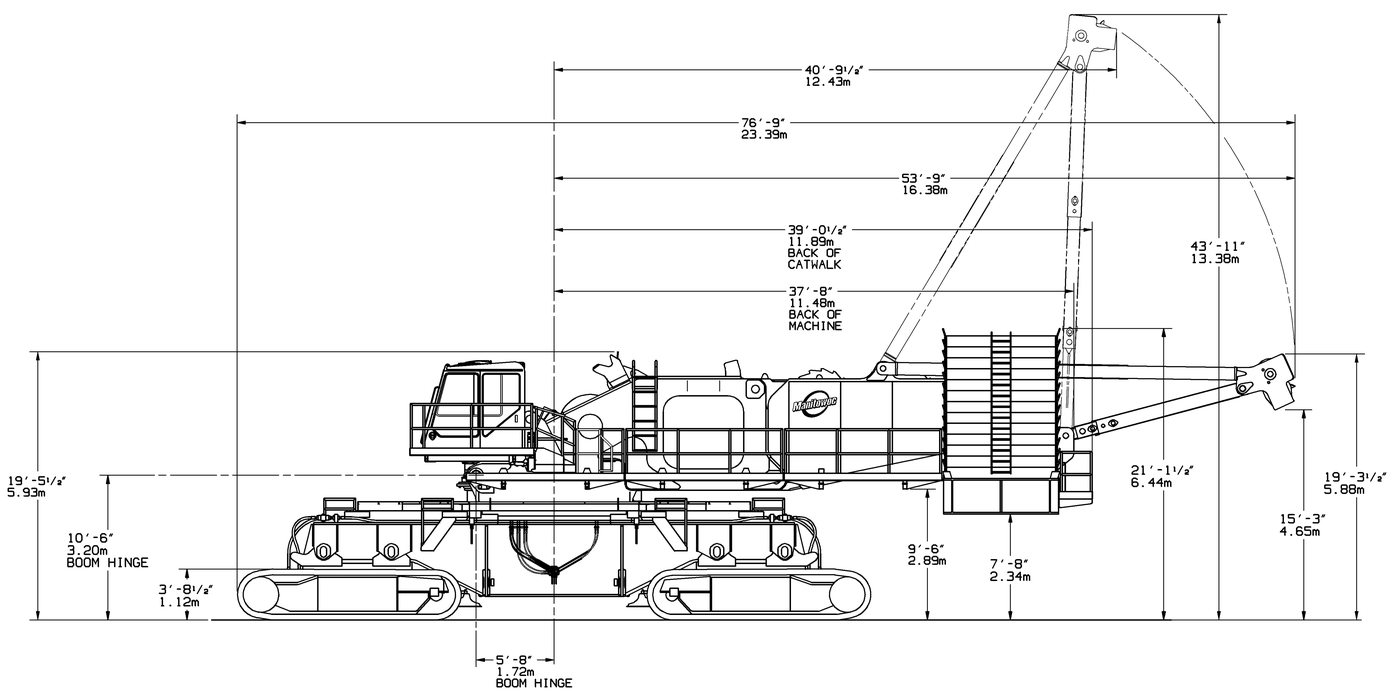

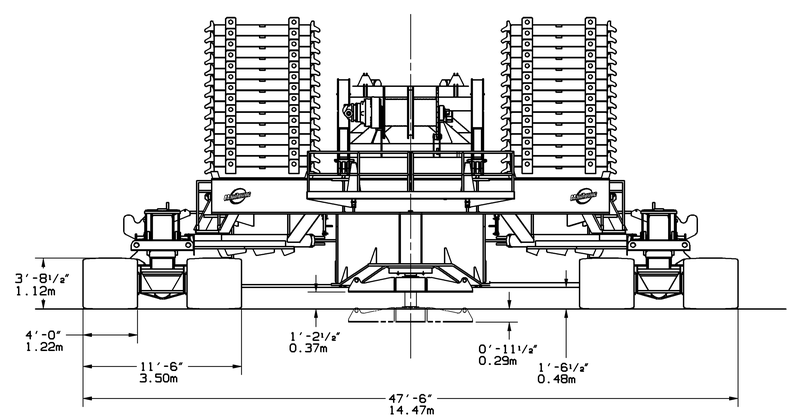

C **WIDE CRAWLER VERSION**

THIS PRINT REMAINS THE PROPERTY OF MANITOWOC CRANES, INC. ALL INFORMATION CONTAINED THEREON IS CONFIDENTIAL. IT IS LOANED, SUBJECT TO RETURN UPON DEMAND, AND ON EXPRESS CONDITION THAT IT IS NOT TO BE COPIED OR USED DIRECTLY OR INDIRECTLY IN ANY WAY WHATSOEVER DETRIMENTAL TO OUR INTERESTS.	TOLERANCE UNLESS OTHERWISE SPECIFIED				SCALE 1/4"=1'	Manitowoc Cranes, Inc. Manitowoc, Wisconsin	OUTLINE DIMENSION CRANE AND MAX-ER
	DECIMAL PLACES	FABRICATION		MACHINING	DR. RAW		
		≤ 10 FEET	> 10 FEET				
	(1) PLACE 0.0	±.120	±.180	±.030	CK. MF	MODEL 21000	
	(2) PLACE 0.00	±.060	±.120	±.015	APP SHL		
	(3) PLACE 0.000			±.005			
	ANGLES	±1°30'		±0°30'			

MACHINING TOLERANCE TO MATE WITH DIMENSION SHOWN ON SURFACE

DATE 06-21-99
PATTERN NO.
DWG. NO. 194237
SHT.2 OF 3

DO NOT SCALE THIS DRAWING

A SHT.2 OF 3 C

BILL OF MATERIAL						
ITEM NO. / NO. REQD.	SEC-TION	DESCRIPTION	LENGTH IN.	MATERIAL	CODE NO. OR DWG. NO	ASSEMBLIES USED ON

REVISIONS

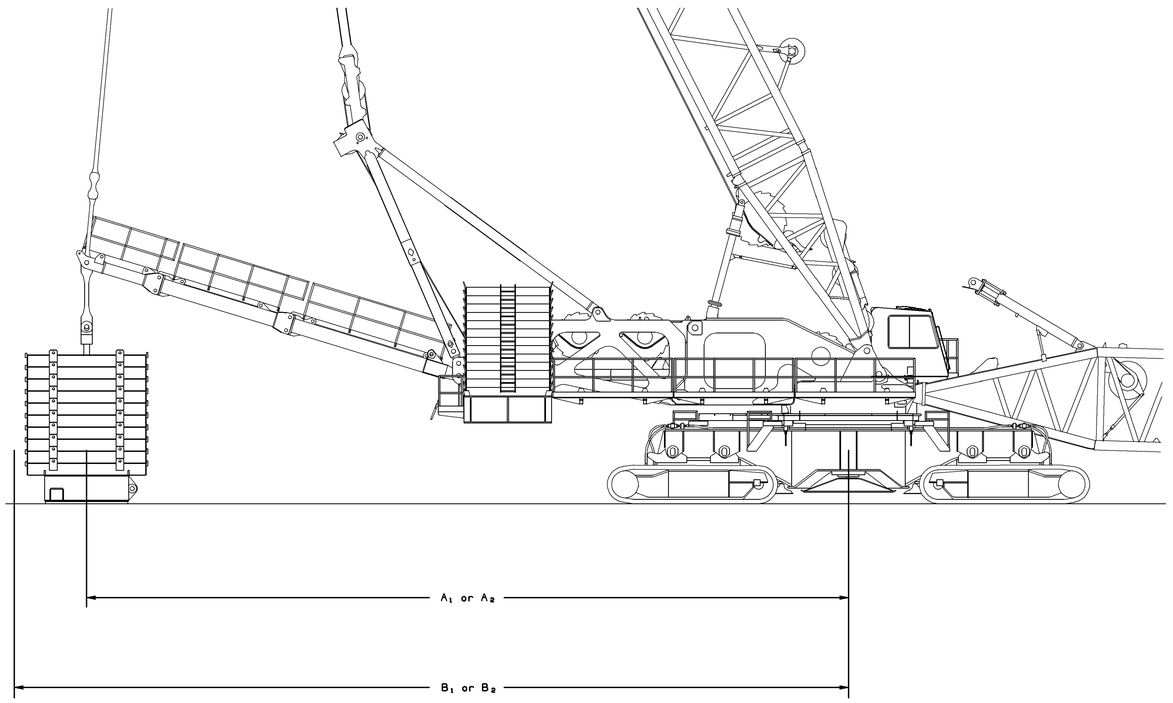

FREE HANGING COUNTERWEIGHT

A_1 2-PIECE SHEAR FRAME=58'-9"(17.91m)
A_2 3-PIECE SHEAR FRAME=72'-6"(22.09m)

B_1 2-PIECE SHEAR FRAME TAILSWING=65'-11"(20.09m)
B_2 3-PIECE SHEAR FRAME TAILSWING=79'-4-1/2"(20.20m)

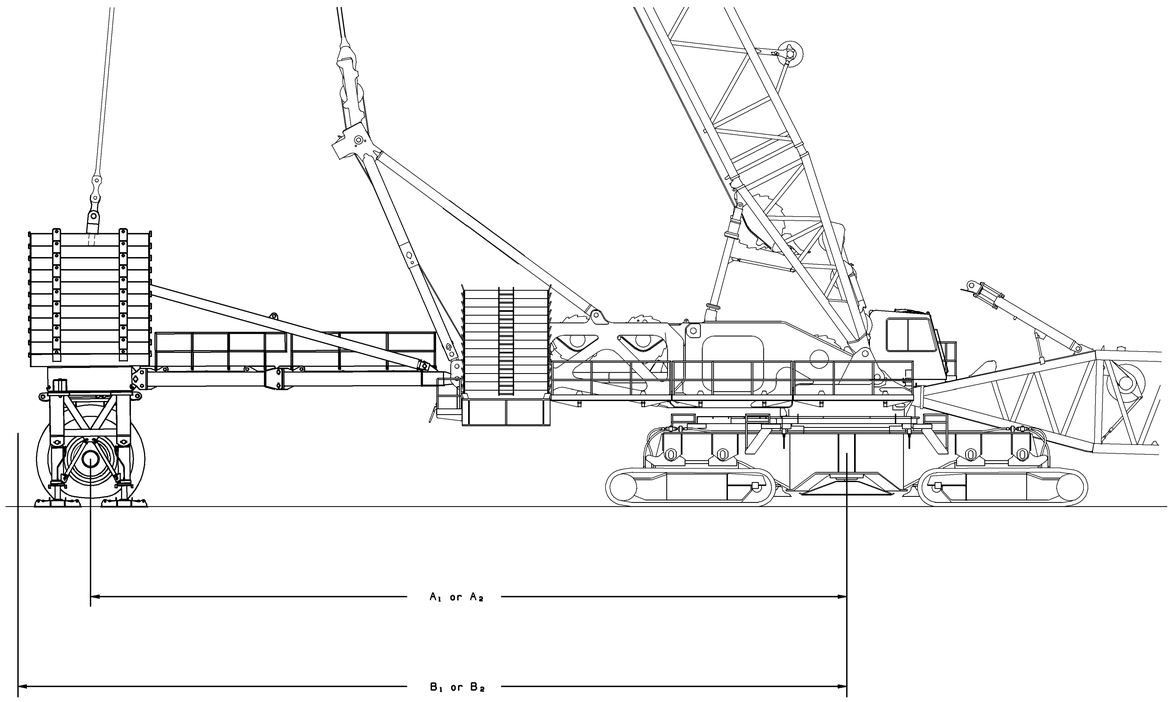

WHEELED COUNTERWEIGHT

A_1 1-PIECE SHEAR FRAME=58'-11"(17.96m)
A_2 2-PIECE SHEAR FRAME=71'-11-1/2"(21.93m)

B_1 1-PIECE SHEAR FRAME TAILSWING=67'-1"(20.45m)
B_2 2-PIECE SHEAR FRAME TAILSWING=80'-1"(24.41m)

THIS PRINT REMAINS THE PROPERTY OF MANITOWOC CRANES, INC. ALL INFORMATION CONTAINED THEREON IS CONFIDENTIAL. IT IS LOANED, SUBJECT TO RETURN UPON DEMAND, AND ON EXPRESS CONDITION THAT IT IS NOT TO BE COPIED OR USED DIRECTLY OR INDIRECTLY IN ANY WAY WHATSOEVER DETRIMENTAL TO OUR INTERESTS.

TOLERANCE UNLESS OTHERWISE SPECIFIED				
DECIMAL PLACES	FABRICATION		MACHINING	
	≤ 10 FEET	> 10 FEET		MACHINING TOLERANCE ONLY APPLIES ON THE DIMENSION ONLY ON THE SURFACE
(1) PLACE 0.0	±.120	±.180	±.030	
(2) PLACE 0.00	±.060	±.120	±.015	
(3) PLACE 0.000			±.005	
ANGLES	±1°30'		±0°30'	

SCALE .016=1'
DR. RAW
CK. MF
APP. SHL

Manitowoc Cranes, Inc.
Manitowoc, Wisconsin

MODEL 21000

OUTLINE DIMENSION
CRANE AND MAX-ER

DATE 12-14-99
PATTERN NO.
DWG. NO. 194237

DWG. NO. 194237
SHT.3 OF 3

DO NOT SCALE THIS DRAWING