REQ'D FOR #75 BOOM LENGTHS

DWG. NO.	173459	174969-3	174000	175003	173352	173353	173355	81033574	173404	173675	173677	174916	175197	175202
BOOM LENGTH	25 FT INSERT	50 FT #75A INSERT	50 FT TOP	337.58" BASIC STRAP	25 FT STRAP	50 FT STRAP	15.00 LINK	19.00 LINK	PIN	COLLAR	PIN	TIMBER	STRAP BRACKET ASSEMBLY	STRAP BRACKET ASSEMBLY
303 FT BASIC	0	0	1	2	2	0	0	4	4	4	4	0	4	0
328 FT	1	0	1	2	4	0	4	4	8	8	8	1	8	0
353 FT	0	1	1	2	2	2	4	4	8	8	8	2	8	2
378 FT	1	1	1	2	4	2	8	4	12	12	12	3	12	2

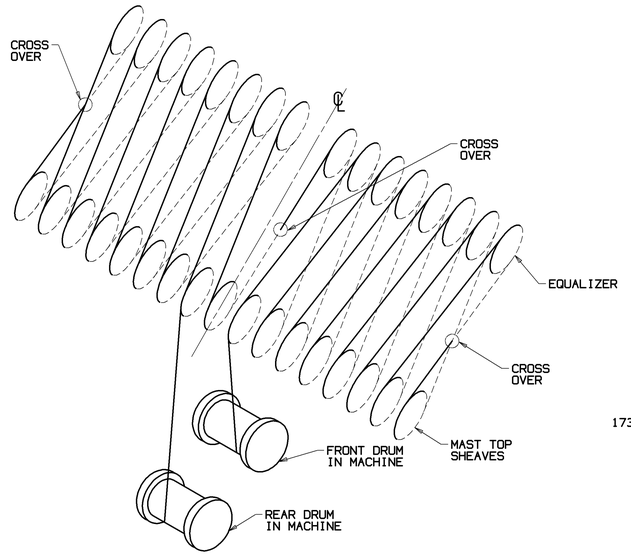

BOOM HOIST REEVING DIAGRAM FOR 32 PART LINE
9,000 FT (2,743.2 M) OF 1.00 FLEX-X 626 (113,800 LBS. BREAKING STRENGTH)
MEC CODE NO. 719369 SEE 2

OR

C ALTERNATE WIRE ROPE
9,000 FT (2,743.2 M) OF 1.00 CONSTRUCTEX, (125,000 LBS. BREAKING STRENGTH)
MEC CODE NO. 719394 SEE 2

A D

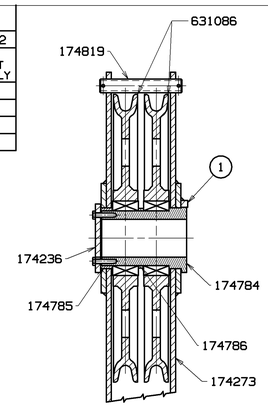

SECTION "C"-"C"

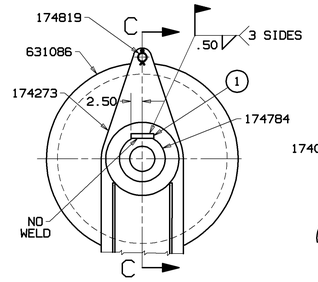

VIEW "A"

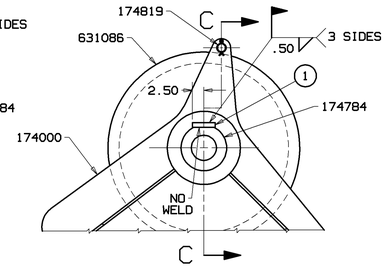

VIEW "B"

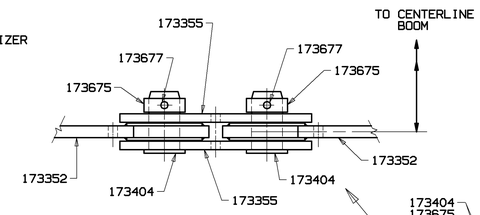

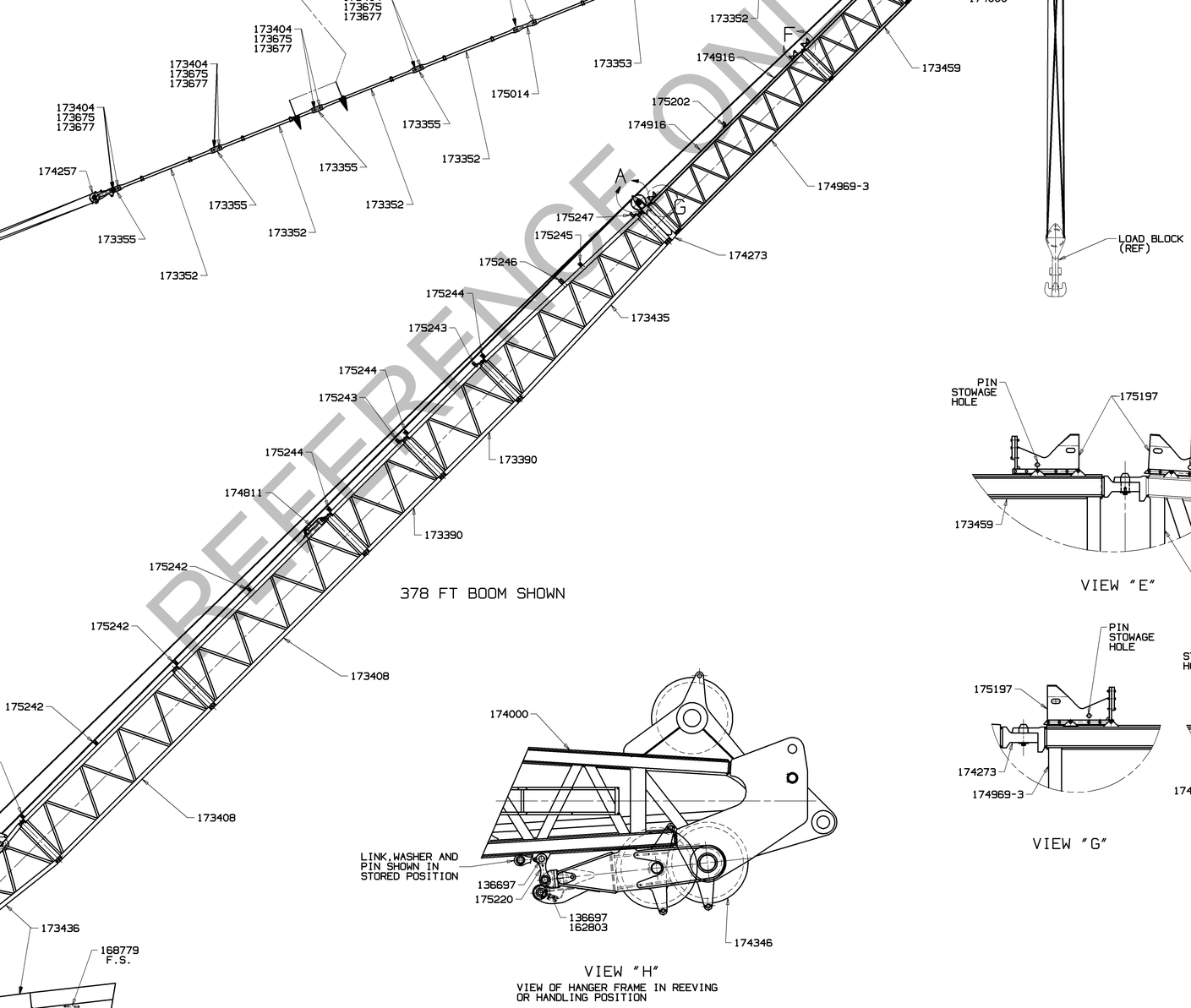

VIEW "H"
VIEW OF HANGER FRAME IN REEVING OR HANDLING POSITION

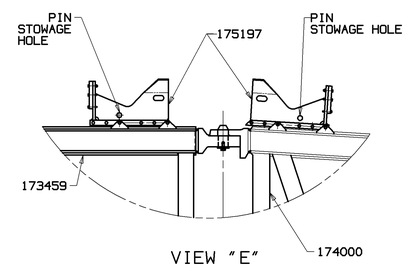

VIEW "E"

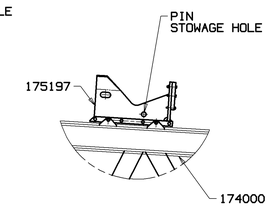

VIEW "D"

VIEW "G"

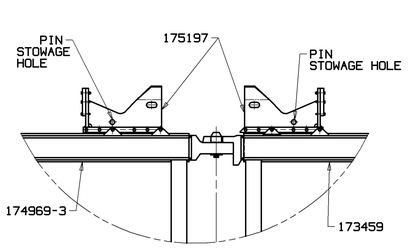

VIEW "F"

BILL OF MATERIAL

ITEM NO.	NO. REQ'D	REC-TION	DESCRIPTION	LENGTH IN.	MATERIAL	DWG. NO. OR STND. NO.	
			#72 BOOM AND BASIC PARTS				
1	2		1.00 X 1.00	5.00	CF 1018		
	2		BOOM SIGN			22656	
	4		PIN			136697	
	2		PIN			144401	
	4		WASHER			162803	
	1		BOOM ANGLE INDICATOR ASSEMBLY			168779	
	8		25 FT BOOM SUPPORT STRAP			173352	
	16		LINK (15.00 LONG)			173355	
	2		25 FT INSERT #72 BOOM			173390	
	1		#75 MAST ASSEMBLY			173397	
	20		PIN			173404	
	2		50 FT INSERT #72 BOOM			173408	
	1		50 FT TRANSITION INSERT #72 BOOM			179982	
	1		50 FT BUTT #72 BOOM			173436	
	1		BOOM STOP ASSEMBLY FOR #72 BOOM			173550	
	20		COLLAR			173675	
	20		PIN			173677	
	1		WIRE ROPE GUIDE ASSEMBLY #72 BOOM			173795	
	2		END PLATE			174236	
	1		EQUALIZER ASSEMBLY			174257	
	1		#72 TO #75 BOOM ADAPTER FRAME			174273	
	1		LOWER BM POINT HANGER FRAME ASSY.			174346	1
	2		SLEEVE			174784	
	2		SPACER			174785	
	2		SPACER			174786	
	1		EQUALIZER PLATFORM ASSEMBLY			174811	
	2		ROPE GUARD			174819	
	2		TIMBER			174917	
	2		LINK			175014	
	4		LINK			175220	
	5		TIMBER GUARD ASSEMBLY			175242	
	2		STRAP BRACKET ASSEMBLY			175243	
	3		STRAP BRACKET & TIMBER GUARD ASSEM.			175244	
	1		TIMBER GUARD ASSEMBLY			175245	
	1		STRAP BRACKET ASSEMBLY			175246	
	1		STRAP BRACKET ASSEMBLY			175247	
	4		SHEAVE 42.00 DIA, 1.62 ROPE - STEEL			631086	

1 800 m TON

2 1.00 WIRE ROPE FOR USE WITH OPTIONAL LAGGING #502369 (REF. DRUM SHAFT ASSEMBLY) NEITHER 25 mm NOR 26 mm METRIC ROPE WILL SPOOL CORRECTLY FOR THIS LAGGING AND SHOULD NOT BE CONSIDERED AS ALTERNATE ROPES.

ASSEMBLIES USED ON

REVISIONS
7-25-94 CRP DWG.TITLE UPDATED
A 2-7-96 CRP ADDED
B 12-19-97 ACK WAS 173435
C 07-15-09 SAV ADDED OPTION 719394
D REMOVED OPTIONS 719370 & 719385
E 04-10-14 RDA WAS 174773

DWG. NO. 174950
SHT 1 OF 2

PRIVATE LABELING REQUIREMENT TO CONFORM TO ENGINEERING SPECIFICATION 6829103794 FOR COMPONENTS LISTED IN GD5500-05-035

DATE 10-28-93

PATTERN NO.

THIS PRINT REMAINS THE PROPERTY OF MANITOWOC CRANES, INC. ALL INFORMATION CONTAINED THEREIN IS CONFIDENTIAL. IT IS LOANED, SUBJECT TO RETURN UPON DEMAND, AND ON EXPRESS CONDITION THAT IT IS NOT TO BE COPIED OR USED DIRECTLY OR INDIRECTLY IN ANY WAY WHATSOEVER DETRIMENTAL TO OUR INTERESTS.

TOLERANCE UNLESS OTHERWISE SPECIFIED			
DECIMAL PLACES	FABRICATION ≤ 10 FEET	FABRICATION > 10 FEET	MACHINING
(1) PLACE 0.0	±.12	±.18	±.03
(2) PLACE 0.00	±.06	±.12	±.015
(3) PLACE 0.000			±.005
ANGLES	±1°30'		±0°30'

FOR MACHINING TOLERANCE SEE ABOVE EXCEPT IN NOTE DIMENSION OR FOR CONTROL

SCALE .09=1FT
DR. CRP
CK. CRP
APP RJW

Manitowoc Cranes, Inc.
Manitowoc, Wisconsin
MODEL M-1200R

BOOM RIGGING ASSEMBLY
#72/75A BOOM
#75 MAST

DWG. NO. 174950

DO NOT SCALE THIS DRAWING

SHT 1 OF 2

REFERENCE ONLY

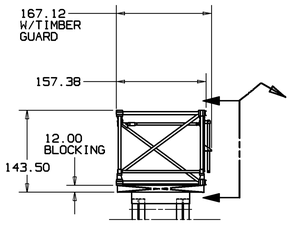

1 SHIPPING POSITION
25 OR 50 FT INSERT

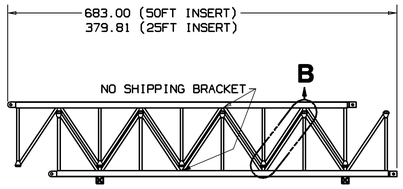

ASSEMBLED WEIGHT: 50 FT INSERT- 25 FT INSERT
38,950 LBS 21,400 LBS
HALF SECTION: 19,475 LBS 10,700 LBS

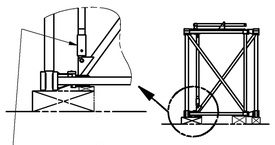

2 SECTION HALVES UNDECKED
AND ROTATED 90° TO
WORKING POSITION.

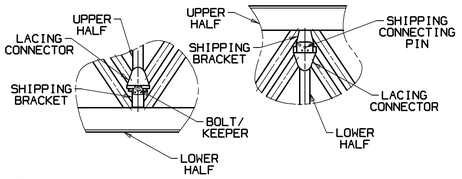

VIEW "B"

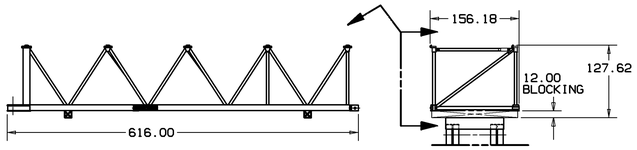

50 FT BOOM BUTT:
HALF SECTION WEIGHT = 20,915 LBS

1 SHIPPING POSITION
50 FT BOOM BUTT

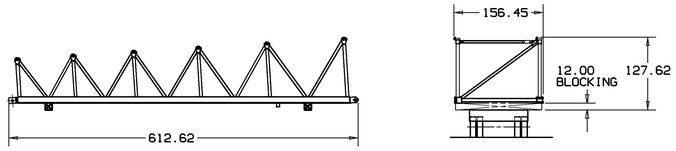

50 FT TRANSITION INSERT:
HALF SECTION WEIGHT = 21,610 LBS

1 SHIPPING POSITION
50 FT TRANSITION INSERT

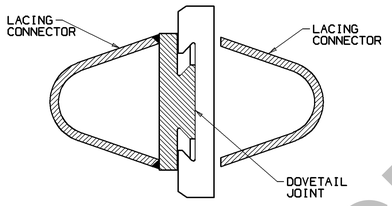

SECTION "A"-"A"

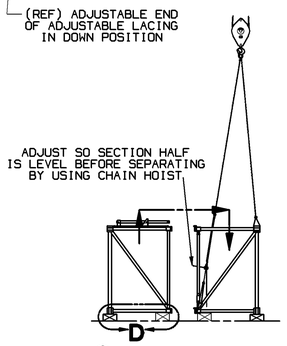

3 SECTION HALVES
SEPARATED

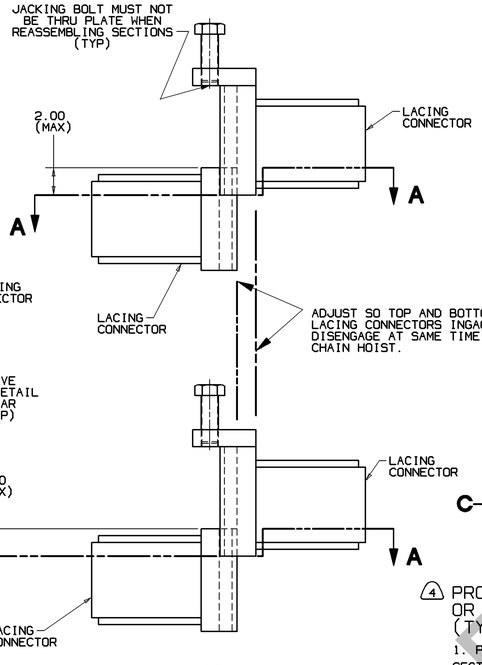

VIEW "C"

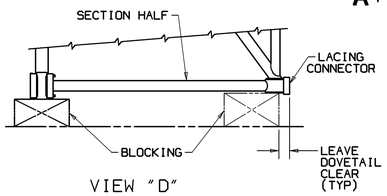

VIEW "D"

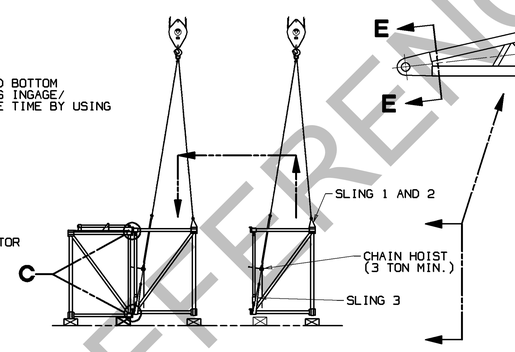

4 PROCEDURE AND HOOKUP FOR JOINING
OR SEPERATING SECTION HALVES
(TYPICAL FOR BOOM BUTT AND INSERTS)

1. PLACE SLING 1 AND 2 ON UPPER CHORD ON EACH SIDE OF SECTION CENTER. ATTACH SLINGS TO HOOK ON ASSIST CRANE.
2. PLACE SLING 3 ON MIDDLE LACING CONNECTOR. ATTACH LEVER OPERATED CHAIN HOIST BETWEEN SLING AND HOOK ON ASSIST CRANE. CHAIN HOIST WILL ENABLE RAISING OR LOWERING INSIDE OF BOOM HALF.

NOTE: SLING 1 AND 2 MUST LIFT THE WEIGHT OF SECTION HALF, AND KEEP SECTION HALVES PARALLEL END TO END. SLING 3 MUST KEEP SECTION LEVEL SIDE TO SIDE.

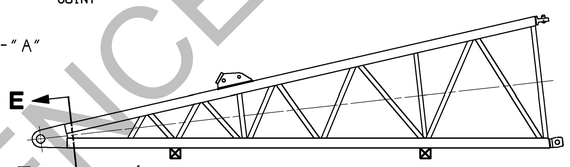

BOOM BUTT

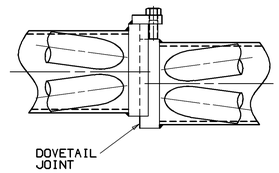

VIEW "E"-"E"

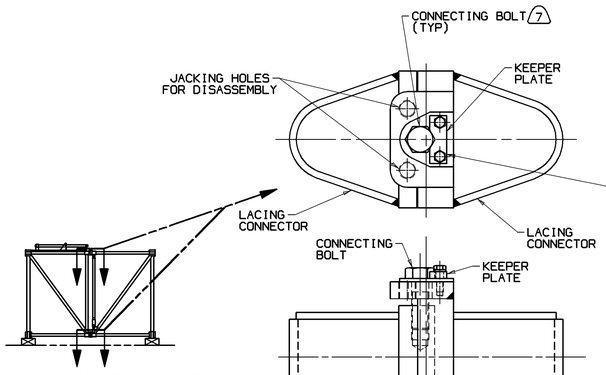

5 SECTION HALVES JOINED

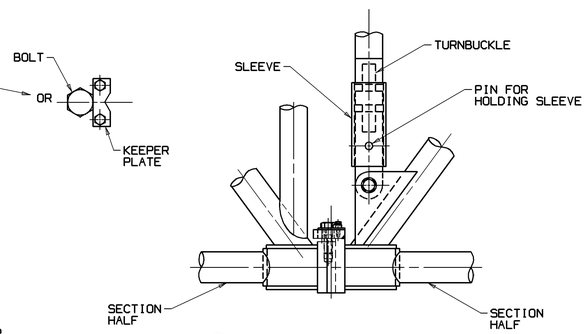

6 ADJUSTABLE LACING

GENERAL

ALL #72 BOOM SECTIONS ARE SHIPPED IN HALVES TO COMPLY WITH HEIGHT AND WIDTH SHIPPING RESTRICTIONS. THE 50 FT AND 25 FT SECTION HALVES ARE SHIPPED BOLTED TOGETHER. THE BOOM BUTT AND TRANSITION SECTION HALVES ARE SHIPPED SEPARATELY. EACH BOOM SECTION WAS CONSTRUCTED AS TWO MATCHED HALVES. STAMPED INTO THE CASTING AT THE FOUR LOWER CONNECTING LUGS OF EACH BOOM SECTION ARE THE BOOM NUMBER, THE PART NUMBER, AND A MANUFACTURING CODE. WHEN ASSEMBLING ANY BOOM SECTION, INCLUDING THE BOOM BUTT AND THE TRANSITION SECTION, MAKE SURE THESE NUMBERS MATCH. SEE DELTA 1 FOR WEIGHT AND SHIPPING DIMENSIONS.

CAUTION

HANDLE BOOM WITH CARE TO AVOID DAMAGING LACINGS AND CHORDS. USE NYLON SLINGS TO HANDLE BOOM SECTIONS. DO NOT USE HOOKS, CHAINS OR WIRE ROPE SLINGS. LIFT AGAINST CHORDS ONLY. NEVER AGAINST LACINGS. DO NOT ATTACH LIFTING SLINGS TO LACINGS OR AT A POINT WHERE TWO LACINGS COME TOGETHER, EXCEPT FOR 3 POINT HANDLING OF HALF SECTION. SEE DELTA 4.

DISASSEMBLING SECTION HALVES FROM SHIPPING POSITION

(SECTION HALVES MUST BE IN DELTA 2 POSITION)

1. SECTION HALF MUST BE BLOCKED AS SHOWN IN VIEW "D".
2. ADJUST SO SECTION HALF IS LEVEL BEFORE SEPERATING, USE HOOKUP AS SHOWN IN DELTA 4.
3. REMOVE BOLTS AND KEEPERS FROM SHIPPING BRACKETS TO ALLOW SEPERATION OF OF TWO HALVES OF BOOM SECTION. (SEE VIEW "B" DELTA 1)
4. DISENGAGE CONNECTING PIN FROM HOLE IN SHIPPING BRACKETS BY LIFTING UPPER HALF SLIGHTLY. ADJUST CHAIN HOIST TO LEVEL SECTION SO PINS DO NOT BIND UP. LIFT SECTION OFF PINS AND THEN SWING AWAY. (SEE DELTA 3)

ASSEMBLING BOOM SECTIONS

(THE FOLLOWING PROCEDURES APPLY TO ALL BOOM SECTIONS INCLUDING THE BUTT AND THE TRANSITION INSERT)

1. SECTION HALF MUST BE BLOCKED AS SHOWN IN VIEW "D"
2. CHECK THAT ALL MATING SURFACES ON DOVETAIL LACING CONNECTORS ARE CLEAN AND DRY. CLEAN AS NECESSARY. (REF. SECTION "A"-"A".

NOTE: SURFACES ON DOVETAIL LACING CONNECTORS ARE PLATED, DO NOT COAT THESE SURFACES WITH "NEVER-SEEZ"

3. USE HOOKUP AS SHOWN IN DELTA 4. PLACE EACH HALF OF BOOM IN APPROXIMATE POSITION FOR ASSEMBLY WITH SECTION HALVES LEVEL, SIDE TO SIDE AND FRONT TO BACK. BLOCK AS NECESSARY TO ASSURE HALVES REMAIN LEVEL. ALL LACING CONNECTORS OF SECTION HALVES MUST BE IN INITIAL POSITION AT THE SAME TIME (AS SHOWN IN VIEW "C") BEFORE LOWERING.
4. LOWER SECTION HALVES, THEN HAND-TIGHTEN BOLT TO HOLD LACING CONNECTORS TOGETHER. SEE DELTA 5 .
5. TORQUE ALL LOWER CONNECTING BOLTS TO 600 FT-LBS. (813 N m) THEN TORQUE ALL UPPER BOLTS TO 600 FT-LBS. (813 N m)

CAUTION: TORQUING LOWER BOLTS BEFORE UPPER BOLTS IS REQUIRED TO PREVENT COMPRESSION OF THE ADJUSTING LACING. ADJUSTABLE LACING WAS TORQUED TO CORRECT TENSION AT FACTORY AND SHOULD NOT NEED TO BE RETORQED WHEN BOOM IS ASSEMBLED.

6. INSTALL KEEPER PLATE TO HOLD BOLT IN PLACE. TORQUE BOLT HEAD AS NEEDED SO HEAD FITS KEEPERS NOTCHED OR FLAT SIDE. SEE DELTA 5

RESETTING ADJUSTABLE LACING TENSION

(NOTE: ADJUSTABLE LACING IS TORQUED SO LACING IS ALWAYS IN TENSION.)
IF BOOM LACING CONNECTORS LOOSEN OVER TIME DUE TO WEAR OR OTHER CAUSES, CHECK THE TORQUE OF THE TURNBUCKLE NUT ON THE ADJUSTABLE LACING.

1. REMOVE PIN HOLDING SLEEVE IN PLACE AND SLIDE SLEEVE UP AND OUT OF THE WAY. (SEE DELTA 6)
2. CLEAN AND LUBE THREADS FOR ADJUSTABLE LACING AS NEEDED.
3. USING OPEN END TORQUE WRENCH, TORQUE NUT ON TURNBUCKLE TO 250 FT-LBS TENSION. (365 N m)
4. SLIDE SLEEVE BACK INTO PLACE AND INSERT PIN.

DISASSEMBLY BOOM SECTIONS FOR SHIPPING

(THE FOLLOWING PROCEDURES APPLY TO ALL BOOM SECTIONS INCLUDING THE BUTT AND THE TRANSITION INSERT)

1. SECTION HALF MUST BE BLOCKED AS SHOWN IN VIEW "D"
2. USE HOOKUP AS SHOWN IN DELTA 4. ADJUST SECTION HALF IN APPROXIMATE POSITION FOR DISASSEMBLY WITH SECTION HALFS LEVEL, SIDE TO SIDE AND FRONT TO BACK.
3. REMOVE BOLTS AND KEEPER PLATES FROM LACING CONNECTORS. SEE DELTA 5 .
4. PLACE TWO CONNECTING BOLTS INTO JACKING HOLES PROVIDED TO UNLOCK DOVETAIL CONNECTIONS . SEE DELTA 5 . FOR BUTT SECTION THE LARGE DOVETAIL MUST BE SEPERATED FIRST. AFTER ALL OTHER DOVETAIL JOINTS HAVE BEEN SEPERATED, FULLY ENGAGE CONNECTING BOLTS IN LARGE DOVETAIL JOINT TO PREVENT BINDING. (SEE VIEW "E"-"E" DELTA 4 .)
   LIFT UPPER HALF SLIGHTLY AND ADJUST CHAIN HOIST TO LEVEL SECTION SO JOINTS DO NOT BIND. (SEE VIEW "C")
   LIFT SECTION TO DISENGAGE, THEN REMOVE HALF OR MOVE TO SHIPPING POSITION.

ASSEMBLING SECTION HALVES FOR SHIPPING

(APPLIES TO 25 AND 50 FT INSERTS)

1. SECTION HALF MUST BE BLOCKED AS SHOWN IN VIEW "D".
2. ADJUST SO SECTION HALF IS LEVEL WITH EACH OTHER. USE HOOKUP AS SHOWN IN DELTA 4.
3. SWING SECTION HALVES TOGETHER AS SHOW IN DELTA 3 . LOWER SECTION HALF INTO SHIPPING CONNECTOR PINS AND SECURE WITH BOLTS AND KEEPERS. SEE VIEW "B" DELTA 1 .
4. TURN COMPLETED INSERT 90° INTO SHIPPING POSITION. SEE DELTA 1.

7 REF. 1.25-7UNC-2A X 3.50 LG. CAPSCREW - MANITOWOC CODE NO. 612928

BILL OF MATERIAL

ITEM NO./ NO. REQD.	SEC-TION	DESCRIPTION	LENGTH IN.	MATERIAL	CODE NO. OR DWG. NO	△

ASSEMBLIES USED ON

REVISIONS
A 7-25-94 CRP NOTE CLARIFIED

THIS PRINT REMAINS THE PROPERTY OF MANITOWOC CRANES, INC. ALL INFORMATION CONTAINED THEREON IS CONFIDENTIAL. IT IS LOANED, SUBJECT TO RETURN UPON DEMAND, AND ON EXPRESS CONDITION THAT IT IS NOT TO BE COPIED OR USED DIRECTLY OR INDIRECTLY IN ANY WAY WHATSOEVER DETRIMENTAL TO OUR INTERESTS.

TOLERANCE UNLESS OTHERWISE SPECIFIED

DECIMAL PLACES	FABRICATION ≤ 10 FEET	FABRICATION > 10 FEET	MACHINING
(1) PLACE 0.0	±.120	±.180	±.030
(2) PLACE 0.00	±.060	±.120	±.015
(3) PLACE 0.000			±.005
ANGLES	±1°30'		±0°30'

FOR MACHINING TOLERANCE ON THIS DRAWING REFER TO SURFACE FINISH SYMBOL

SCALE
DR. CRP
CK. CRP
APP RJW

Manitowoc Cranes, Inc.
Manitowoc, Wisconsin

MODEL M-1200R

BOOM RIGGING ASSEMBLY
72/75A BOOM-75 MAST
HANDLING AND ASSEMBLY
OF BOOM SECTIONS

DWG. NO. 174950
SHT 2 OF 2

DATE 10-28-93
PATTERN NO.

DWG. NO. 174950

REFERENCE ONLY!