TABLE "A"			
REQ'D FOR VARIOUS JIB LENGTHS			
DRAWING NUMBER	169759	277360 DWG. 77535	171477 WIRE ROPE TIMBER GUARD OPTIONAL
JIB LENGTH	20 FT INSERT	19 FT-2.00 PENDANT	
60 FT.	1	2	1
80 FT.	2	4	2
100 FT.	3	6	3
120 FT	4	8	4

TABLE "B"										
REQ'D FOR VARIOUS JIB OFFSETS HEAVY LIFT TOP										
DRAWING NUMBER	(3) 277362 DWG.77535	LINK		(2) LINK	PIN	PIN	PIN	PIN	LINK
JIB OFFSET (4)	7 FT-4.00 PENDANT	171857	171858	171794	171867	169849	75465	170844	171761
5°	0	2	2	2	4	4	2	2	2
15°	2	0	0	0	2	4	2	2	2
30°	2	0	0	2	2	4	2	2	2

TABLE "C"									
REQ'D FOR VARIOUS JIB OFFSETS LONG REACH TOP									
DRAWING NUMBER	(3) 277362 DWG.77535	LINK		276785 DWG.73026	PIN	PIN	PIN	STRUT	(2) LINK
JIB OFFSET (4)	7 FT-4.00 PENDANT	171857	171858	6 FT-0.00 PENDANT	171868	171867	169849	171850	171794
5°	0	2	2	2	4	2	2	1	0
15°	0	0	0	2	4	0	2	1	2
30°	2	0	0	2	4	0	2	1	0

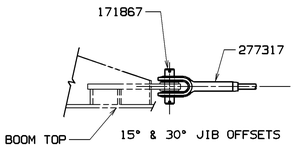

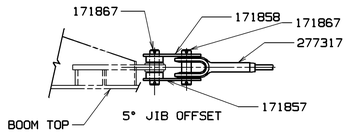

VIEW "E"-"E"

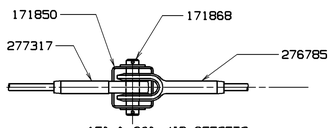

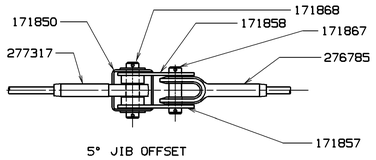

VIEW "F"-"F"

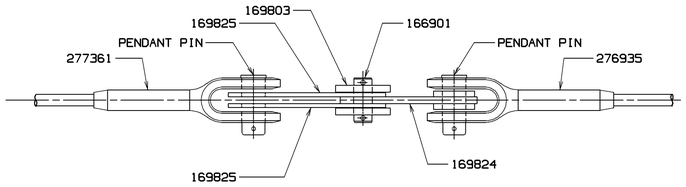

VIEW "C"-"C"

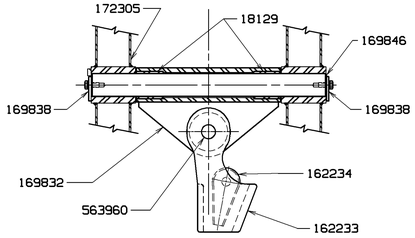

SECTION "D"-"D"

SEE (7)

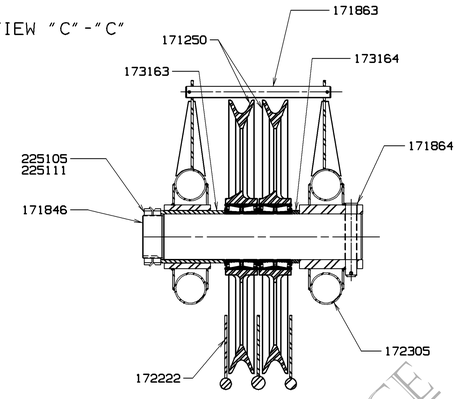

SECTION "A"-"A"

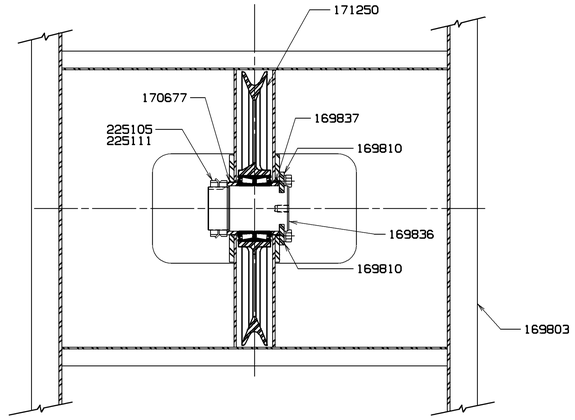

SECTION "B"-"B"

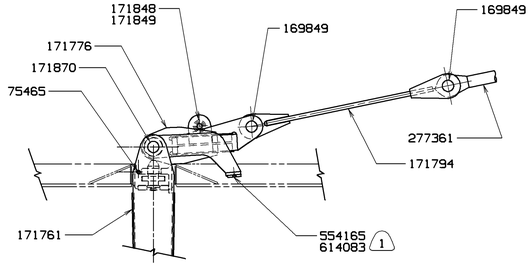

VIEW "G"

REFERENCE ONLY!

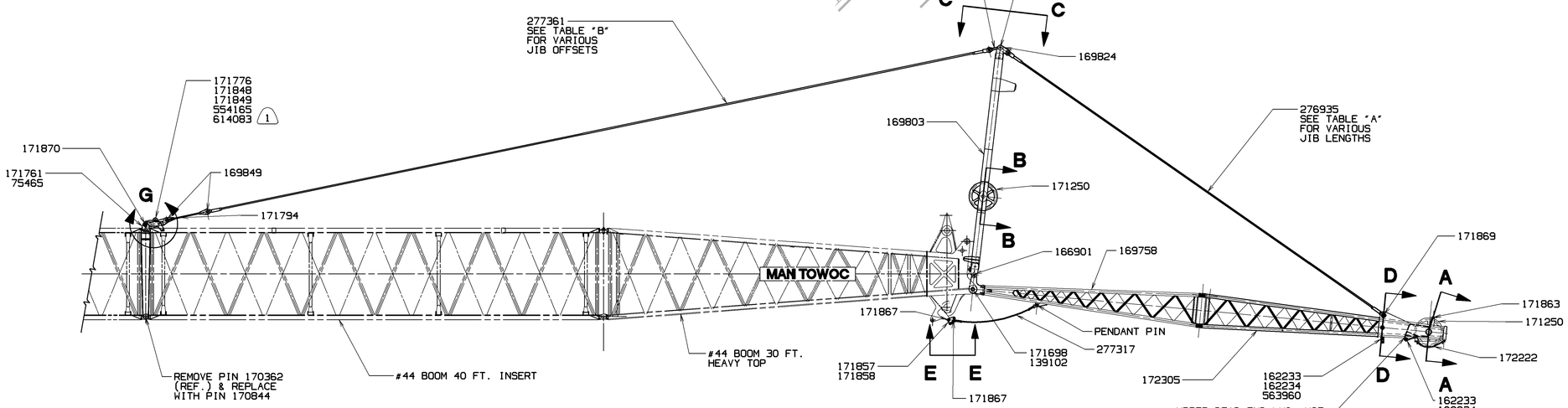

HEAVY LIFT TOP
BASIC 40 FT JIB W/5° OFFSET SHOWN.

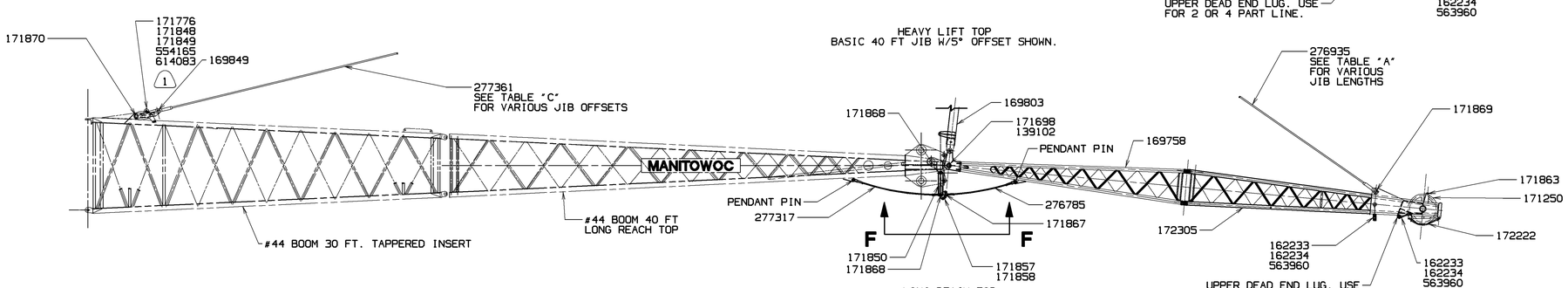

LONG REACH TOP
BASIC 40 FT JIB W/5° OFFSET SHOWN.

BILL OF MATERIAL

ITEM NO.	NO. REQD.	SECTION	DESCRIPTION	LENGTH IN.	MATERIAL	CODE NO. OR DWG. NO.	
	2		BUSHING			18129	
	2		PIN			139102	
	1		SOCKET			162233	
	1		WEDGE			162234	
	4		PIN			166901	
	1		JIB BUTT (20 FT - 0.00)			169758	
	1		JIB STRUT (20 FT - 0.00)			169803	
	1		JIB TOP (20 FT - 0.00)			172305	
	2		PIN KEEPER			169810	
	2		LINK			169824	
	4		LINK			169825	
	1		DEAD END BAIL			169832	7
	1		PIN			169836	
	1		SPACER			169837	
	2		END PLATE			169838	
	1		PIN			169846	7
	1		SPACER			170677	
	3		SHEAVE ASSEMBLY			171250	
	2		BUSHING			171698	
	1		BACKSTAY SUPPORT			171776	
	1		SHAFT			171846	
	2		ROLLER			171848	
	1		SHAFT			171849	
	1		ROPE GUARD			171863	
	1		PIN			171864	
	1		ROPE GUARD			172222	
	2		PIN			171869	
	2		PIN			171870	
	1		SPACER			173163	
	1		SPACER			173164	
	4		LOCKNUT			225105	
	2		LOCKWASHER			225111	
	2		JIB BASIC PENDANT (40 FT. - 0.00)			276935	5
	2		PENDANT (7 FT. - 7.00)			277317	6
	2		BACKSTAY BASIC PENDANT (69 FT. - 9.00)			277361	5
	2		PAD			554165	
	1		PIN			563960	
	2		.312-18UNC-2A X .50 LG FL AL HD CAPSCR.			614083	1

ASSEMBLIES USED ON

REVISIONS

(1) APPLY PERMABOND 115 OR EQUAVALENT TO SCREW 614083 AT ASSEMBLY.

(2) LOCATE ADJACENT TO BACKSTAY SUPPORT 171776.

(3) LOCATE BETWEEN BACKSTAY LINK 171794 OR BACKSTAY SUPPORT 171776 & PENDANT 277361

(4) JIB OFFSETS ARE NOMINAL.

(5) ON DWG. 77535

(6) ON DWG. 73026

(7) CAN BE USED FOR DEAD END WITH 2 PART LINE. MUST BE REMOVED WHEN 2,3, OR 4 PART LINE AND/OR UPPER DEAD END LUG IS USED.

FORMERLY 170429
REDESIGNED AS NO. 172693

DR. MJW	Manitowoc Cranes, Inc. Manitowoc, Wisconsin	JIB ASSEMBLY (USA)
CK. MJW	MODEL M-250	#132 JIB
APP TSC	M-250 SERIES 2	1.25 SWAGED PENDANTS

DWG. NO. 173165

DATE 4-24-92

PATTERN NO.

USG. NO. 173165

DO NOT SCALE THIS DRAWING