ITEMS REQ'D FOR VARIOUS BOOM LENGTHS - SEE SHEETS 2, 3 & 4 FOR BOOM MAKE-UP

ITEM NO.		#290 INSERTS			PENDANTS			PINS			INTERMEDIATE SUSP	
		100	101	102	106	105	104	R100	R104	R103	108	109
BOOM LENGTH		INSERT 12M (39.4FT) ASSY	INSERT 6M (19.7FT) ASSY	INSERT 3M (9.8FT) ASSY	PENDANT 12.08M (39.64FT)	PENDANT 6.04M (19.82FT)	PENDANT 3.02M (9.91FT)	PENDANT PIN (12)	PIN 2 HOLES	SAFETY PIN	LINK	PENDANT 21.04M (69.03FT)
METERS	FEET											
19	62.3	0	1	0	0	2	0	4	8	16	0	0
		OR 0	0	2	0	0	4	6	12	24		
22	72.2	0	1	1	0	2	2	6	12	24	0	0
25	82.0	1	0	0	2	0	0	4	8	16	0	0
		OR 0	1	2	0	2	4	8	16	32		
28	91.9	1	0	1	2	0	2	6	12	24	0	0
31	101.7	1	1	0	2	2	0	6	12	24	0	0
		OR 1	0	2	2	0	4	8	16	32		
34	111.5	1	1	1	2	2	2	8	16	32	0	0
37	121.4	2	0	0	4	0	0	6	12	24	0	0
		OR 1	1	2	2	2	4	10	20	40		
40	131.2	2	0	1	4	0	2	8	16	32	0	0
43	141.1	2	1	0	4	2	0	8	16	32	0	0
		OR 2	0	2	4	0	4	10	20	40		
46	150.9	2	1	1	4	2	2	10	20	40	0	0
49	160.8	3	0	0	6	0	0	8	16	32	0	0
		OR 2	1	2	4	2	4	12	24	48		
52	170.6	3	0	1	6	0	2	10	20	40	0	0
55	180.4	3	1	0	6	2	0	10	20	40	0	0
		OR 3	0	2	6	0	4	12	24	48		
58	190.3	3	1	1	6	2	2	12	22 (18)	44 (18)	2	2
61	200.1	3	1	2	6	2	4	14	26 (18)	52 (18)	2	2

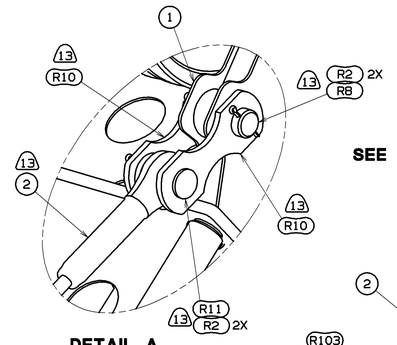

DETAIL A
SCALE 0.200

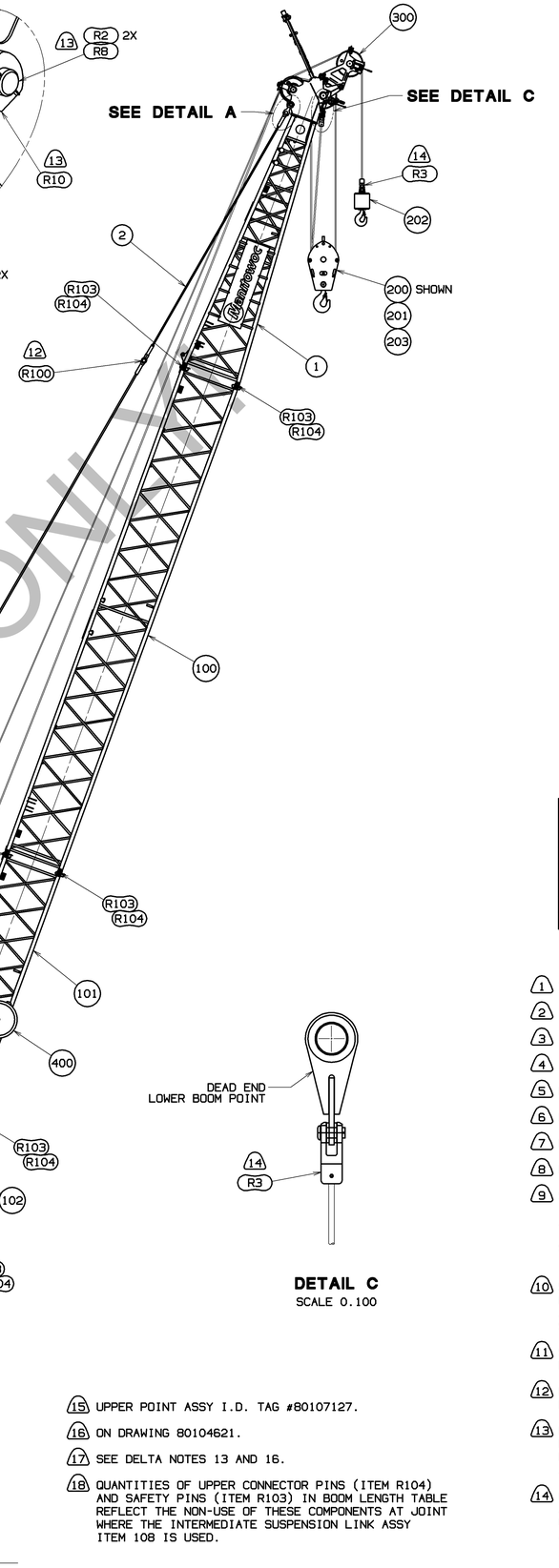

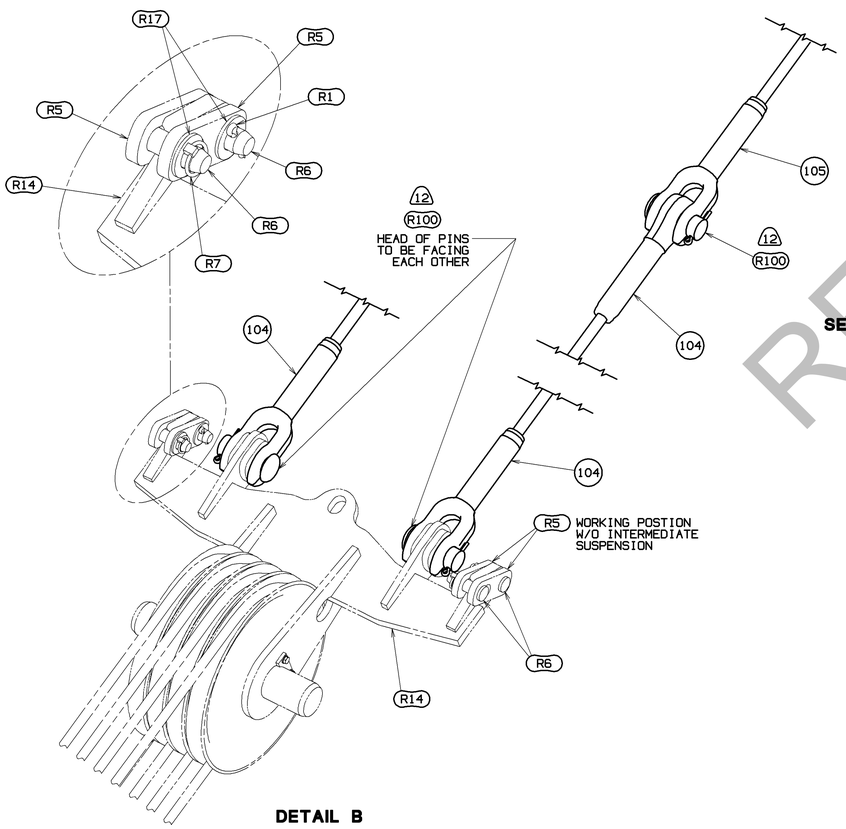

DETAIL B
SCALE 0.167

DETAIL C
SCALE 0.100

34.0 M (111.5 FT)
#290 BOOM SHOWN

(15) UPPER POINT ASSY I.D. TAG #80107127.

(16) ON DRAWING 80104621.

(17) SEE DELTA NOTES 13 AND 16.

(18) QUANTITIES OF UPPER CONNECTOR PINS (ITEM R104) AND SAFETY PINS (ITEM R103) IN BOOM LENGTH TABLE REFLECT THE NON-USE OF THESE COMPONENTS AT JOINT WHERE THE INTERMEDIATE SUSPENSION LINK ASSY ITEM 108 IS USED.

(1) TOP 7.0M I.D. TAG #80101590.

(2) INSERT 12.0M I.D. TAG #80101581.

(3) INSERT 6.0M I.D. TAG #80101584.

(4) INSERT 3.0M I.D. TAG #80101586.

(5) BUTT 6.0M I.D. TAG #84054809.

(6) MAXIMUM NUMBER OF 3 METER INSERTS = 2.

(7) MAXIMUM NUMBER OF 6 METER INSERTS = 1.

(8) MAXIMUM NUMBER OF 12 METER INSERTS = 3.

(9) STARTING WITH BOOM BUTT ASSEMBLY (R15). INSERT ASSEMBLIES MUST BE INSTALLED IN ASCENDING LENGTH, WITH THE EXCEPTION OF (1) 3.0M INSERT AFTER THE INTERMEDIATE SUSPENSION ON THE 61.0M (200.1 FT) LONG BOOM. (SEE BOOM MAKEUP SHEET 4).

(10) 58.0M (190.3 FT) AND 61.0M (200.1 FT) BOOM REQUIRES INTERMEDIATE SUSPENSION ITEM 108 AND PENDANTS ITEM 109 (ON DRAWING 80107971). SEE SHEET 6 FOR OPERATIONAL INSTRUCTIONS.

(11) SEE BLOCK REEVING DRAWING 80109060 FOR DRUM 2 RIGGING CONFIGURATION OPTIONS AND INSTRUCTIONS.

(12) FOR REPLACEMENT INFO ONLY. PENDANT PINS ARE FURNISHED WITH PENDANT.

(13) LINKS (R10), PINS (R8 & R11) AND COTTER PINS (R2) STOW IN PARTS BOX 84054316, BUT CAN BE SHIPPED WITH EACH BOOM TOP PENDANT (ITEM 2) AS ONE COMPONENT.

(14) QUANTITY 2 WHEN STOWS IN PARTS BOX 84054316 AS STANDARD EQUIPPED. QUANTITY 3 WHEN STOWS IN PARTS BOX 84054316 AS STANDARD EQUIPPED AND OPTION EQUIPPED.

BILL OF MATERIAL

ASSEMBLIES USED ON: 84054240

ITEM NO.	NO. REQ'D	DESCRIPTION	MATERIAL	DWG. NO. OR STD. NO.	
BOOM RIGGING B10:290					
1	1	TOP ASSY #290, 7.0 M	80101587		1
2	2	PENDANT 32MM DIA X 6616MM LG	80113407		17
3					
4					
5					
6					
7					
NO. REQ'D FOR THE FOLLOWING ITEMS ARE IN THE BOOM LENGTH TABLE					
100		INSERT ASSY #290 12M	80101579		2
101		INSERT ASSY #290 6M	80101583		3
102		INSERT ASSY #290 3M	80101585		4
103					
104		PENDANT 32MM DIA X 3021MM LG	80104622		16
105		PENDANT 32MM DIA X 6041MM LG	80104623		16
106		PENDANT 32MM DIA X 12082MM LG	80104624		16
107					
108		LINK INT SUSP ASSY	80107961		10
109		PENDANT INTERMEDIATE SUSPENSION	80113422		10
110					
OPTION 1: HOOK BLOCKS					
200	1	BLOCK 75MTON 3 SHEAVE	80117525		
201	1	BLOCK 25MTON 1 SHEAVE	80117526		
202	1	OVERHAUL BALL 12.5 MTON	80104395		
203	1	BLOCK 100MTON 4 SHEAVE	80117524		
204					
OPTION 2: UPPER BOOM POINT					
300	1	UPPER POINT ASSEMBLY	80104216		15
OPTION 3: TAGLINE					
400	1	TAGLINE ASSY	80107275		
BASIC REFERENCE ITEMS					
R1	2	PIN COTTER 3/8 DIA X 2.25 LG	562148		
R2	6	PIN COTTER 3/8 DIA X 4.00 LG	562152		13
R3	-	SOCKET BUTTON 22-26MM WIRE ROPE	A11041		14
R4					
R5	4	LINK TIE BACK	80103859		
R6	4	PIN 35.00 DIA	80104008		
R7	2	PIN LOCKING, 38 MM U/L	80104821		
R8	2	PIN 66.0 DIA X 140.5 LG	80106394		13
R9					
R10	4	LINK MACH #290	80112790		13
R11	2	PIN 1 HOLE 63.5 DIA X 136.5 LG	80112791		13
R12					
R13					
R14	1	EQUALIZER ASSY	84054318		
R15	1	BUTT ASSY #290 6M	84054806		5
R16					
R17	4	F WASHER 36 200HV FLZN 7089	7951380014		
NO. REQ'D FOR THE FOLLOWING REFERENCE ITEMS ARE IN THE BOOM LENGTH TABLE					
R100		PIN 1 HOLE W/HD WIRE ROPE SOCKET	564081		12
R101					
R102					
R103		PIN SAFETY .243 OD X 5.00	563640		
R104		PIN 2 HOLES 54.86 DIA X 99.0 LG	84054423		
R105					

REVISIONS

DWG. NO. 80121888
SHT 1 OF 6

PRIVATE LABELING REQUIREMENT TO CONFORM TO ENGINEERING SPECIFICATION 6829103794 FOR COMPONENTS LISTED IN GDS500-05-035

THIS PRINT REMAINS THE PROPERTY OF MANITOWOC CRANES, INC. ALL INFORMATION CONTAINED THEREIN IS CONFIDENTIAL. IT IS LOANED, SUBJECT TO RETURN UPON DEMAND, AND ON EXPRESS CONDITION THAT IT IS NOT TO BE COPIED OR USED DIRECTLY OR INDIRECTLY IN ANY WAY WHATSOEVER DETRIMENTAL TO OUR INTERESTS.

TOLERANCE UNLESS OTHERWISE SPECIFIED

DECIMAL PLACES	FABRICATION ≤ 10 FEET	FABRICATION > 10 FEET	MACHINING
(1) PLACE 0.0	±.12	±.18	±.03
(2) PLACE 0.00	±.06	±.12	±.015
(3) PLACE 0.000			±.005
ANGLES	±1°30'		±0°30'

MACHINING TOLERANCE APPLIES TO NOTE DIMENSION ONLY IF CONFIGURE

SCALE .021
DR. RHV
CK. PJH
APP JRR

Manitowoc Cranes, Inc.
Manitowoc, Wisconsin

MODEL MLC80A-1

BOOM RIGGING
B10:290

DWG. NO. 80121888

DATE 08-05-19
REV. LTR. A

SHT 1 OF 6

DO NOT SCALE THIS DRAWING

REFERENCE ONLY

BILL OF MATERIAL						
ITEM NO. / NO. REQD.	REC. ITEM	DESCRIPTION	LENGTH IN.	MATERIAL	DWG. NO. OR CMD. NO.	ASSEMBLIES USED ON

REVISIONS

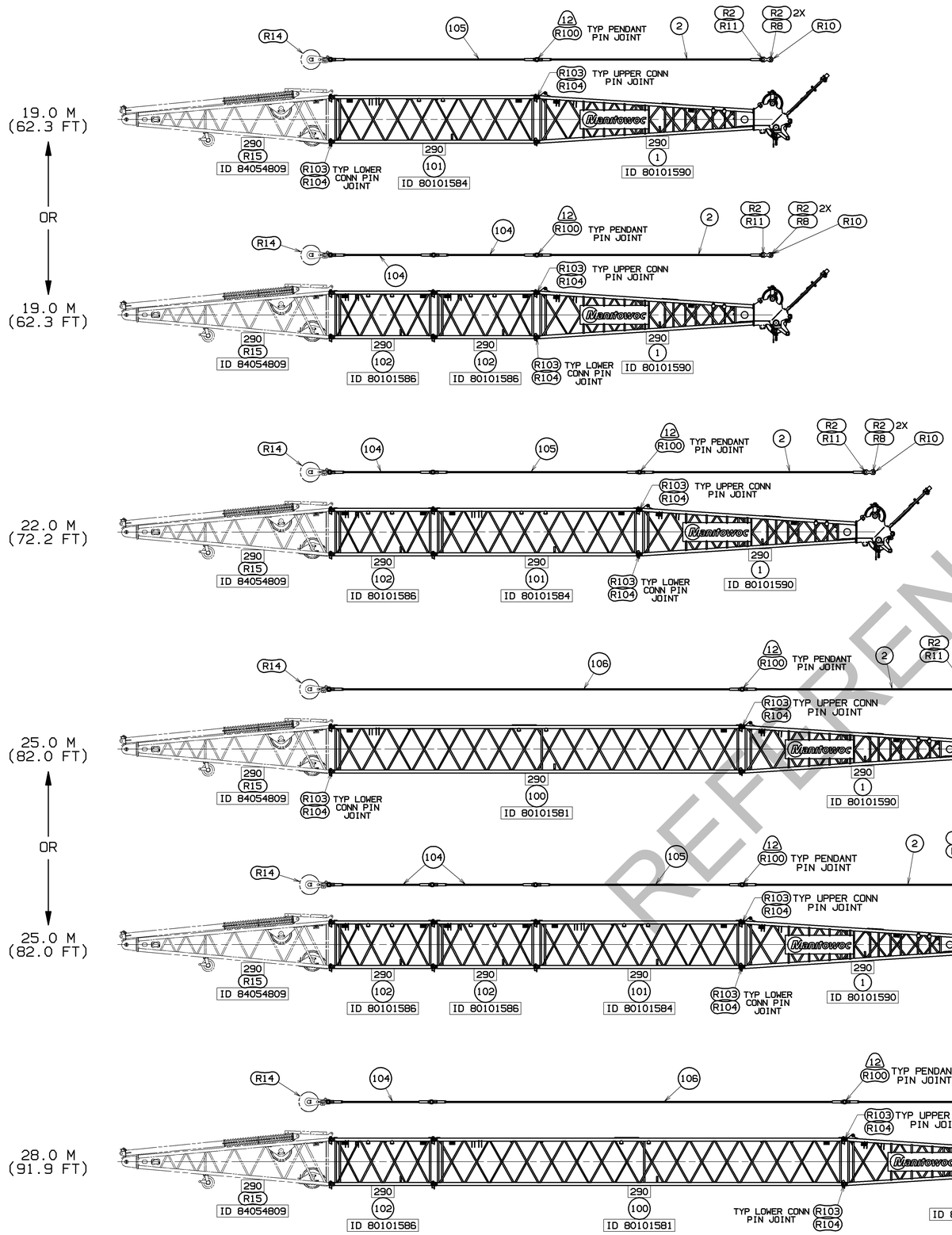

RECOMMENDED BOOM MAKEUP

FOR TYP PIN JOINT SEE DETAILS A, B & E

BOOM HANDLING WITH EQUALIZER WITH EQUALIZER ATTACHED TO BOOM BUTT MAXIMUM BOOM INSERTS THAT CAN BE CANTILEVERED BEYOND 6M BOOM BUTT IS AS FOLLOWS			
LENGTH	3M (9.8FT) INSERT 80101585	6M (19.7FT) INSERT 80101583	12M (39.4FT) INSERT 80101579
3M (9.8FT)	1	0	0
6M (19.7FT)	0	1	0
	2	0	
9M (29.5FT)	1	1	0
12M (39.4FT)	0	0	1
	2	1	0
15M (49.2FT)	1	0	1
18M (59.1FT)	0	1	1
	2	0	
21M (68.9FT)	1	1	1
24M (78.7FT)	0	0	2
	2	1	1

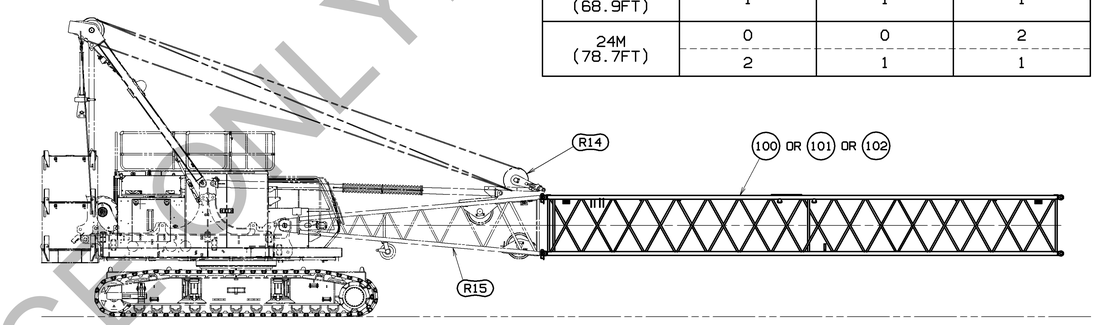

BOOM HANDLING WITH EQUALIZER PINNED TO BUTT

SCALE 0.020

(SEE STEP 2 AND DETAIL F ON SHEET 5 FOR BUTT TO INSERT ATTACHMENT)

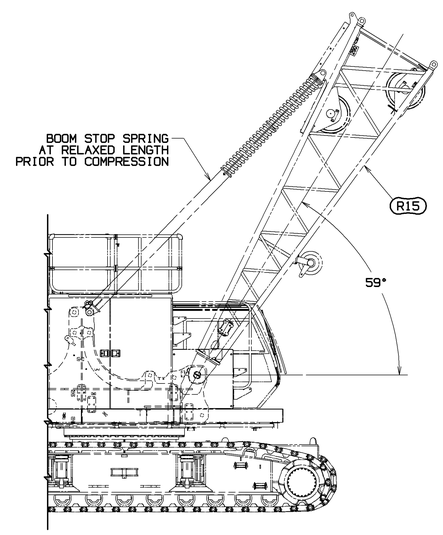

BOOM STOP
START OF CUSHION

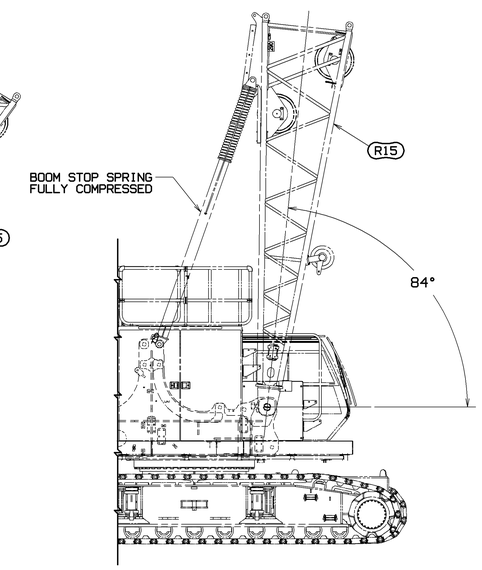

BOOM STOP
PHYSICAL STOP

REFERENCE ONLY!

THIS PRINT REMAINS THE PROPERTY OF MANITOWOC CRANES, INC. ALL INFORMATION CONTAINED THEREIN IS CONFIDENTIAL. IT IS LOANED, SUBJECT TO RETURN UPON DEMAND, AND ON EXPRESS CONDITION THAT IT IS NOT TO BE COPIED OR USED DIRECTLY OR INDIRECTLY IN ANY WAY WHATSOEVER DETRIMENTAL TO OUR INTERESTS.

TOLERANCE UNLESS OTHERWISE SPECIFIED			
DECIMAL PLACES	FABRICATION ≤ 10 FEET	FABRICATION > 10 FEET	MACHINING
(1) PLACE 0.0	±.12	±.18	±.03
(2) PLACE 0.00	±.06	±.12	±.015
(3) PLACE 0.000			±.005
ANGLES	±1°30'		±0°30'

MACHINING TOLERANCE APPLIES TO NOTE DIMENSION ONLY

SCALE .020	Manitowoc Cranes, Inc.	
DR. RHV	Manitowoc, Wisconsin	BOOM RIGGING
CK. PJH	MODEL MLC80A-1	B10:290
APP JRR		

DWG. NO. 80121888

SHT 2 OF 6

PRIVATE LABELING REQUIREMENT TO CONFORM TO ENGINEERING SPECIFICATION 6829102794 FOR COMPONENTS LISTED IN GDS500-05-035

DATE 08-05-19

REV. LTR. A

DWG. NO. 80121888

SHT 2 OF 6

DO NOT SCALE THIS DRAWING

BILL OF MATERIAL						
ITEM NO.	NO. REQD.	REC-TION	DESCRIPTION	LENGTH IN	MATERIAL	DWG. NO. OR STND. NO

ASSEMBLIES USED ON

REVISIONS

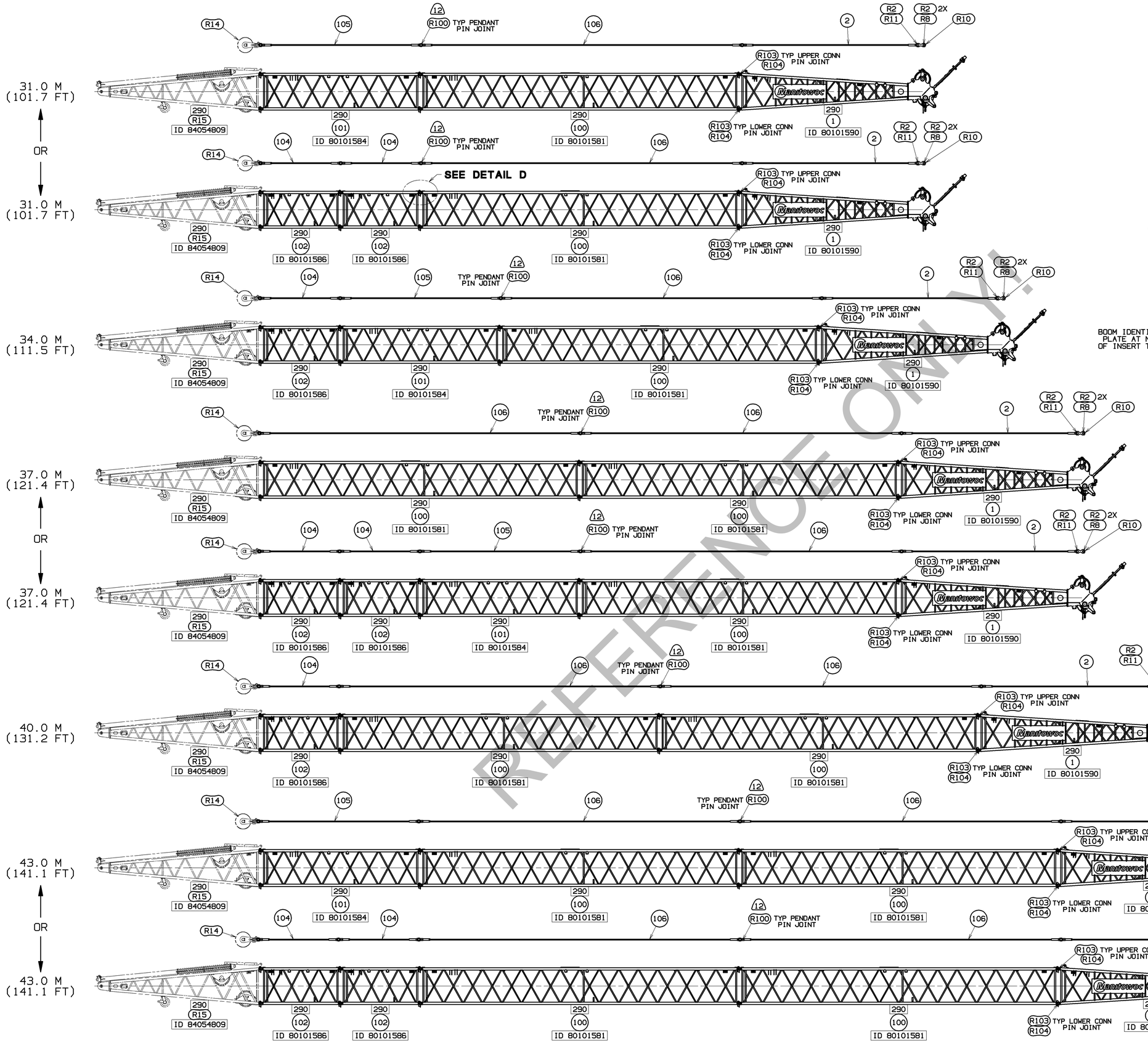

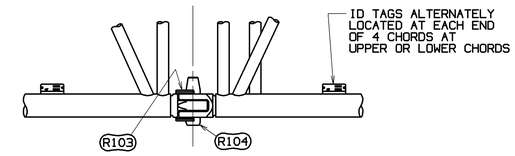

TYPICAL LOCATION OF INSERT IDENTIFICATION TAGS

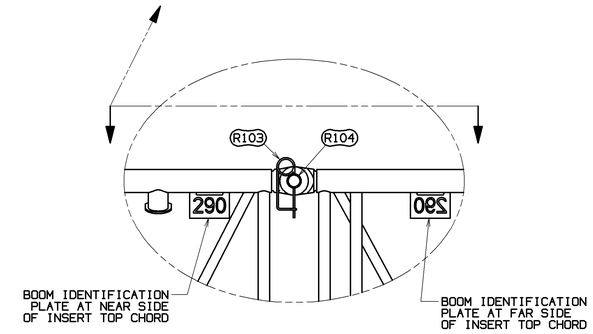

DETAIL D

TYPICAL LOCATION OF BOOM IDENTIFICATION PLATE

SCALE 0.120

RECOMMENDED BOOM MAKEUP

FOR TYP PIN JOINT SEE DETAILS A, B & E

REFERENCE ONLY!

THIS PRINT REMAINS THE PROPERTY OF MANITOWOC CRANES, INC. ALL INFORMATION CONTAINED THEREIN IS CONFIDENTIAL. IT IS LOANED, SUBJECT TO RETURN UPON DEMAND, AND ON EXPRESS CONDITION THAT IT IS NOT TO BE COPIED OR USED DIRECTLY OR INDIRECTLY IN ANY WAY WHATSOEVER DETRIMENTAL TO OUR INTERESTS.

TOLERANCE UNLESS OTHERWISE SPECIFIED			
DECIMAL PLACES	FABRICATION ≤ 10 FEET	FABRICATION > 10 FEET	MACHINING
(1) PLACE 0.0	±.12	±.18	±.03
(2) PLACE 0.00	±.06	±.12	±.015
(3) PLACE 0.000			±.005
ANGLES	±1°30'		±0°30'

MACHINING TOLERANCE FOR THREE DECIMAL PLACES DO NOT INCLUDE SURFACE FINISH

SCALE .020

DR. RHV

CK. PJH

APP JRR

Manitowoc Cranes, Inc.
Manitowoc, Wisconsin

MODEL ML.CB0A-1

BOOM RIGGING

B10:290

DWG. NO. 80121888

SHT 3 OF 6

PRIVATE LABELING REQUIREMENT TO CONFORM TO ENGINEERING SPECIFICATION 6829103794 FOR COMPONENTS LISTED IN GDS500-05-035

DATE 08-05-19

REV. LTR. A

DWG. NO. 80121888

SHT 3 OF 6

DO NOT SCALE THIS DRAWING

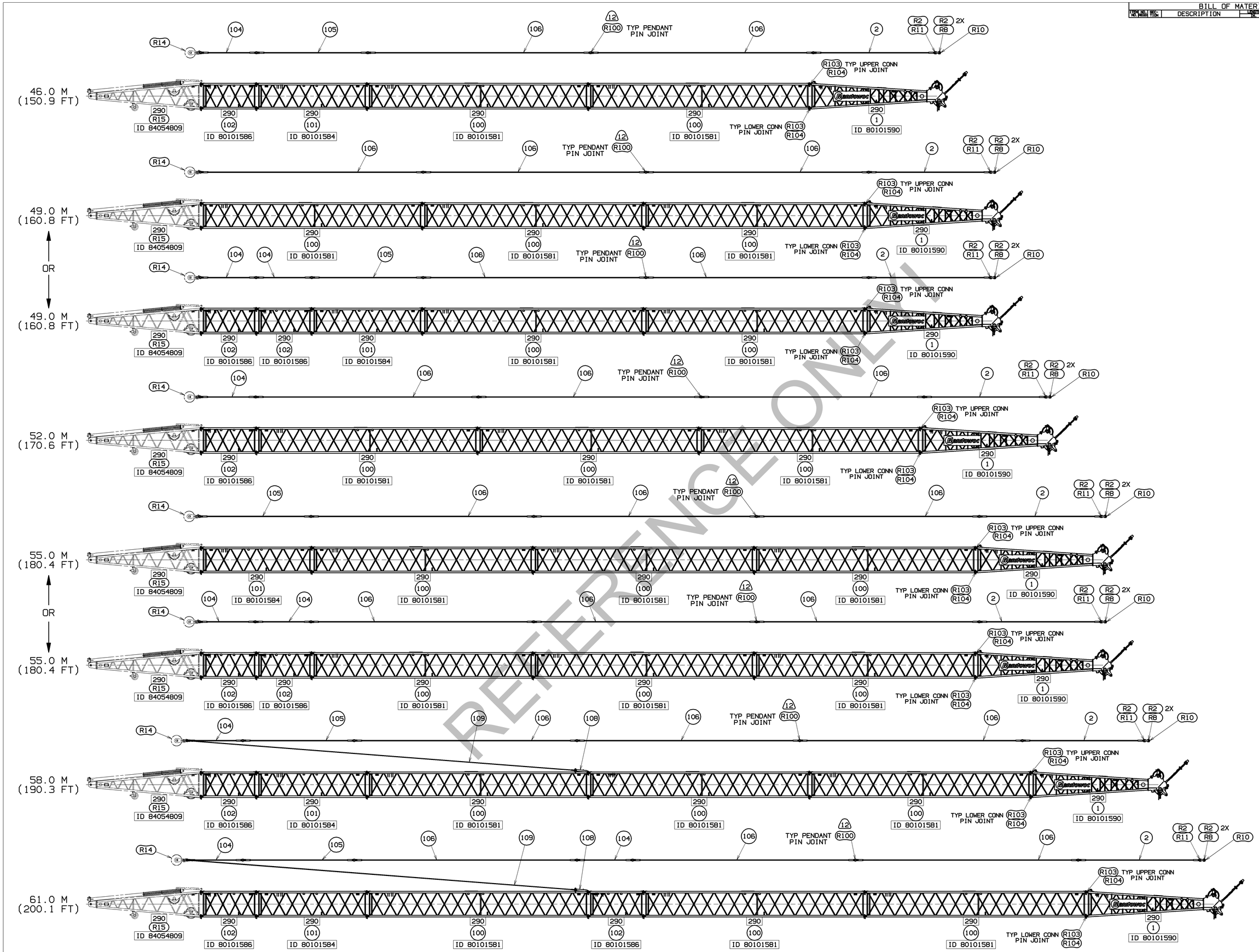

REFERENCE ONLY!

RECOMMENDED BOOM MAKEUP

FOR TYP PIN JOINT SEE DETAILS A, B & E

BILL OF MATERIAL						
ITEM NO. / NO. REQD.	REQ. ITEM	DESCRIPTION	LENGTH IN	MATERIAL	DWG. NO. OR STND. NO.	

ASSEMBLIES USED ON

REVISIONS

THIS PRINT REMAINS THE PROPERTY OF MANITOWOC CRANES, INC. ALL INFORMATION CONTAINED THEREIN IS CONFIDENTIAL. IT IS LOANED, SUBJECT TO RETURN UPON DEMAND, AND ON EXPRESS CONDITION THAT IT IS NOT TO BE COPIED OR USED DIRECTLY OR INDIRECTLY IN ANY WAY WHATSOEVER DETRIMENTAL TO OUR INTERESTS.

TOLERANCE UNLESS OTHERWISE SPECIFIED			
DECIMAL PLACES	FABRICATION ≤ 10 FEET	FABRICATION > 10 FEET	MACHINING
(1) PLACE 0.0	±.12	±.18	±.03
(2) PLACE 0.00	±.06	±.12	±.015
(3) PLACE 0.000			±.005
ANGLES	±1°30'		±0°30'

MACHINING TOLERANCE IS FOR THE MACHINED SURFACE ONLY

SCALE .016

DR. RHV

CK. PJH

APP JRR

Manitowoc Cranes, Inc.
Manitowoc, Wisconsin

MODEL MLC80A-1

BOOM RIGGING

B10:290

PRIVATE LABELING REQUIREMENT TO CONFORM TO ENGINEERING SPECIFICATION 6829103794 FOR COMPONENTS LISTED IN GDS200-05-035

DATE 08-05-19

REV. LTR. A

DWG. NO. 80121888

SHT 4 OF 6

BILL OF MATERIAL					
ITEM NO. / NO. REQD.	REQ'D ITEM	DESCRIPTION	LENGTH IN	MATERIAL	DWG. NO. OR CMD. NO

ASSEMBLIES USED ON

REVISIONS

TO ASSEMBLE BOOM

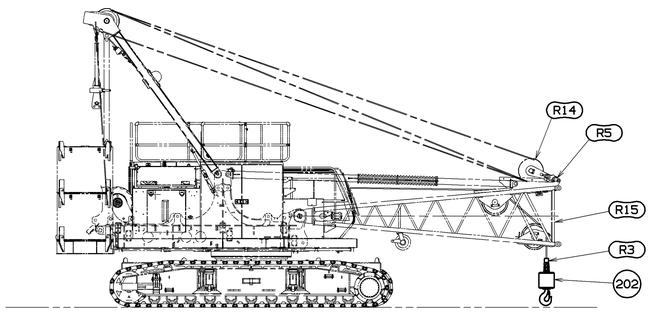

STEP 1
MACHINE PREP FOR BOOM ASSEMBLY USING BUTT

EQUALIZER (R14) TO BE PINNED TO BOOM BUTT (R15) WITH LINKS (R5). (SEE DETAIL F).

REEVE 1 PART LINE FROM FRONT DRUM OVER UPPER AND LOWER INTERNAL BUTT WIRE ROPE SHEAVES AND CONNECT TO WEIGHT BALL (ITEM 202) WITH SOCKET (R3).

ASSEMBLE BOOM COMPLETE, WITHOUT BUTT.
DOUBLE TAPERED PIN (R104) AND SAFETY PIN (R103) TO BE INSTALLED AT TOP CONNECTORS. (SEE DETAIL E).
DOUBLE TAPERED PIN (R104) AND SAFETY PIN (R103) TO BE INSTALLED AT BOTTOM CONNECTORS. (SEE DETAIL E).

REMOVE WEIGHT BALL (ITEM 202) PRIOR TO ASSEMBLY OF BOOM TO BUTT (STEP 2).

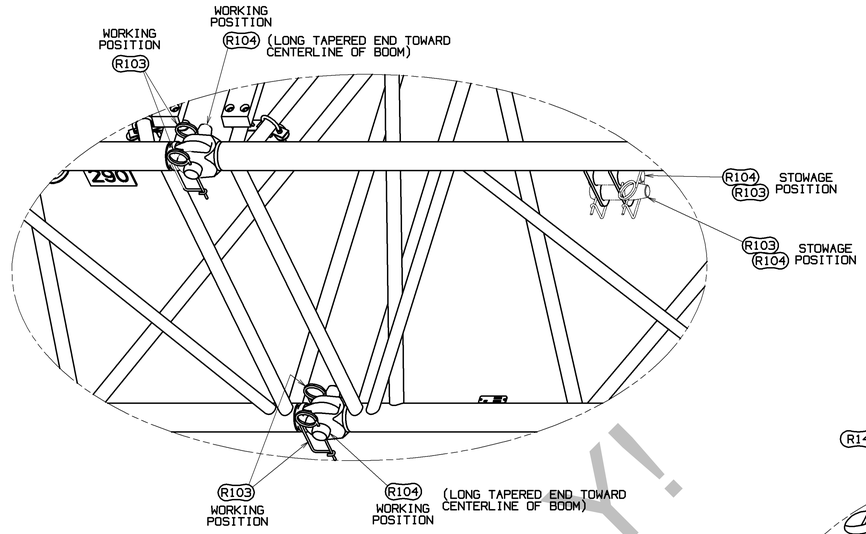

DETAIL E
TYPICAL PIN CONNECTORS
SCALE 0.150

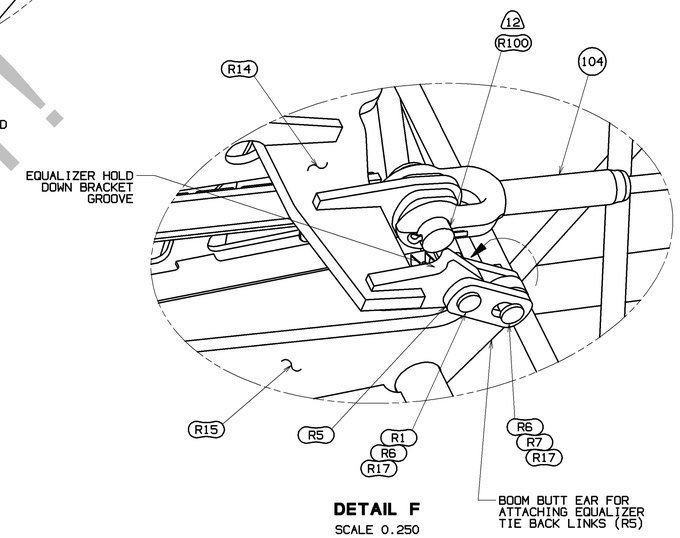

DETAIL F
SCALE 0.250

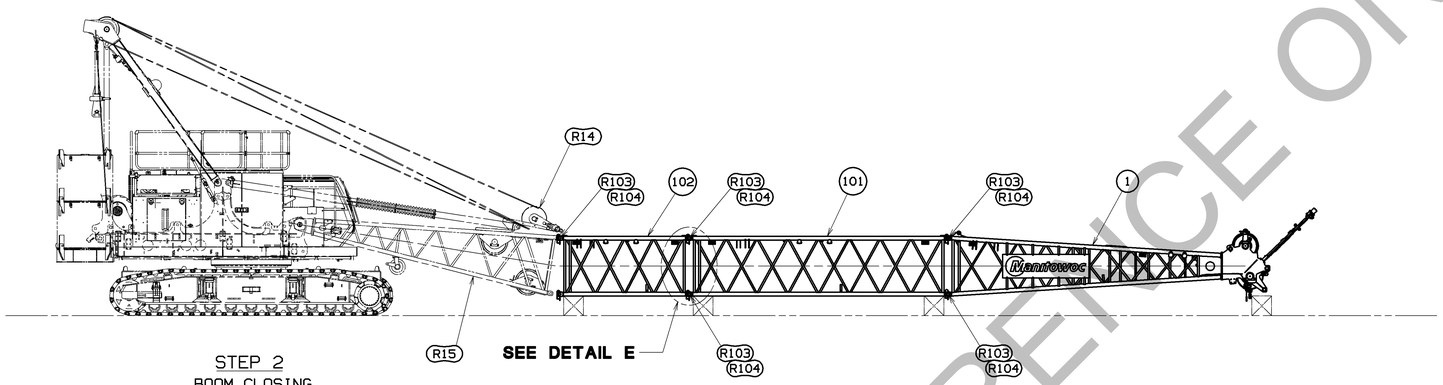

STEP 2
BOOM CLOSING

WITH EQUALIZER (R14) STILL PINNED TO BOOM BUTT (R15) AND THE BOOM INSERTS/TOP ASSEMBLY SUPPORTED ON BLOCKING.
PIN BUTT (R15) UPPER CONNECTORS TO MATING INSERT/TOP CONNECTORS WITH DOUBLE TAPERED PINS (R104) AND SAFETY PINS (R103). (SEE DETAIL E).

SLOWLY BOOM UP TO MATE LOWER CONNECTORS AND INSTALL DOUBLE TAPERED PINS (R104) AND SAFETY PINS (R103). (SEE DETAIL E).
THIS BOOM CLOSING PROCEDURE CAN BE PERFORMED FOR ALL BOOM LENGTHS [19M (62.3FT) - 61M (200.1FT)].

NOTE:
SEE TABLE ON SHEET 2 FOR MAXIMUM BOOM INSERTS THAT CAN BE CANTILEVERED WITH EQUALIZER (R14) PINNED TO BUTT (R15).

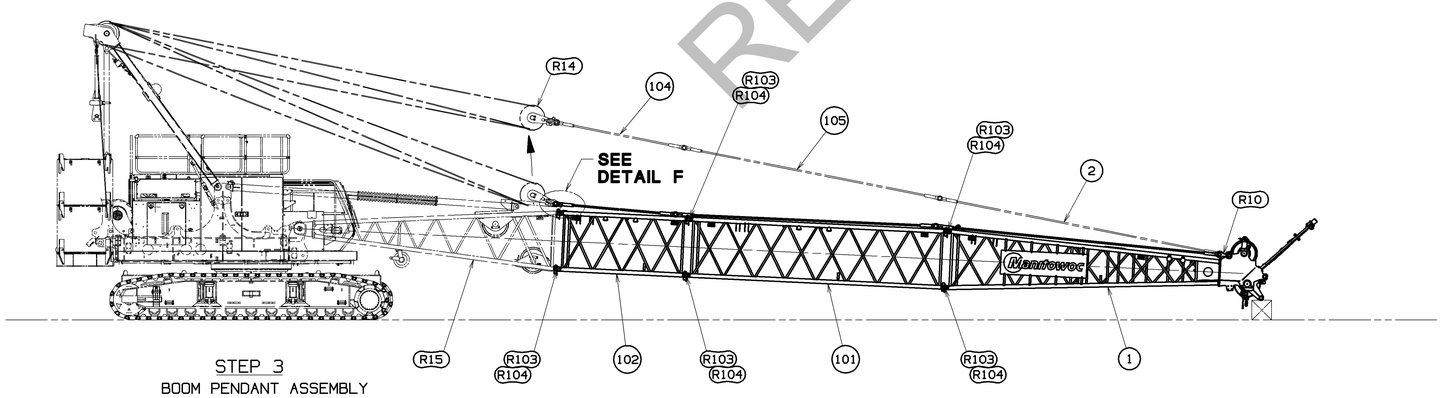

STEP 3
BOOM PENDANT ASSEMBLY

ASSEMBLE BOOM PENDANTS AS REQUIRED.
SEE DETAIL A ON SHEET 1 FOR PENDANT (ITEM 2) TO LINK (R10) AND LINK (R10) TO TOP (ITEM 1) ATTACHMENT.
SEE DETAIL B ON SHEET 1 FOR PENDANT TO PENDANT AND PENDANT TO EQUALIZER (R14) ATTACHMENT.

DETACH EQUALIZER (R14) FROM BOOM BUTT (R15) BY REMOVING PIN (R6) WITH LOCKING PIN (R7) FROM TIE BACK LINKS (R5).
PIVOT TIE BACK LINKS AROUND UPPER LINK PIN AND RELOCATE SLOT IN TIE BACK LINKS TO MATCH GROOVE ON EQUALIZER HOLD DOWN BRACKET. (SEE DETAIL F).

REATTACH PIN (R6), WASHER (R17) AND LOCKING PIN (R7) INTO SLOTTED TIE BACK LINK HOLE AND EQUALIZER HOLD DOWN BRACKET GROOVE. (SEE DETAIL B ON SHEET 1).

RIG BLOCK (SEE DELTA NOTE 11 ON SHEET 1) AND RAISE BOOM.

TO DISASSEMBLE BOOM

1. BOOM DOWN AND SUPPORT BOOM ON BLOCKING. UNREEVE BLOCK.
2. ATTACH EQUALIZER (R14) TO BOOM BUTT (R15).
   UNPIN TIE BACK LINKS (R5) FROM STOWAGE LOCATION ON EQUALIZER HOLD DOWN BRACKET (SEE DETAIL B ON SHEET 1) AND ROTATE TO REATTACH TIE BACK LINKS TO EAR ON BOOM BUTT. (SEE DETAIL F).
3. DETACH AND STORE PENDANTS FROM EQUALIZER (R14) OUT TO BOOM TOP (ITEM 1).
   STORE TOP LINKS (R10). PINS (R8 & R11) AND COTTERS (R2) WITH BOOM TOP PENDANTS (ITEM 2) OR IN PARTS BOX 84054316. (SEE DETAIL A ON SHEET 1 AND DELTA NOTE 13 ON SHEET 1).
4. SLOWLY BOOM UP TO CREATE ENOUGH TENSION TO SUPPORT BOOM BUTT (R15) WHEN LOWER CONNECTOR PINS (R104) ARE REMOVED.
5. REMOVE PINS (R104) FROM LOWER PIN CONNECTORS AT BUTT JOINT AND BOOM DOWN TO BLOCKING. (SEE VIEW "STEP 2 BOOM CLOSING")
6. REMOVE PINS (R104) FROM UPPER PIN CONNECTORS AT BUTT JOINT.

   WARNING:
   BOOM MUST BE PROPERLY BLOCKED TO PREVENT SHIFTING DURING PIN REMOVAL.

7. SLOWLY BACK AWAY FROM BOOM.
8. REPEAT ASSEMBLY STEP 1 TO PREP MACHINE WITH WEIGHT BALL (ITEM 202) FOR DISASSEMBLY OF BOOM.
9. DISASSEMBLE BOOM.

REFERENCE ONLY!

THIS PRINT REMAINS THE PROPERTY OF MANITOWOC CRANES, INC. ALL INFORMATION CONTAINED THEREIN IS CONFIDENTIAL. IT IS LOANED, SUBJECT TO RETURN UPON DEMAND, AND ON EXPRESS CONDITION THAT IT IS NOT TO BE COPIED OR USED DIRECTLY OR INDIRECTLY IN ANY WAY WHATSOEVER DETRIMENTAL TO OUR INTERESTS.

TOLERANCE UNLESS OTHERWISE SPECIFIED			
DECIMAL PLACES	FABRICATION ≤ 10 FEET	FABRICATION > 10 FEET	MACHINING
(1) PLACE 0.0	±.12	±.18	±.03
(2) PLACE 0.00	±.06	±.12	±.015
(3) PLACE 0.000			±.005
ANGLES	±1°30'		±0°30'

MACHINING TOLERANCE FOR USE WITH FINISH DESIGN CONTROL SURFACE

SCALE .020
DR. RHV
CK. PJH
MODEL ML.CB0A-1
APP JRR

Manitowoc Cranes, Inc.
Manitowoc, Wisconsin

BOOM RIGGING
B10:290

PRIVATE LABELING REQUIREMENT TO CONFORM TO ENGINEERING SPECIFICATION 6829103794 FOR COMPONENTS LISTED IN GDS500-05-035

DATE 08-05-19
REV. LTR. A

DWG. NO. 80121888
SHT 5 OF 6

BILL OF MATERIAL						
ITEM NO. / NO. REQD.	REQ. ITEM	DESCRIPTION	LENGTH IN.	MATERIAL	DWG. NO. OR STND. NO	

ASSEMBLIES USED ON

REVISIONS

INTERMEDIATE SUSPENSION (ITEMS 108 AND 109) INSTALLATION

1. IF PREVIOUSLY INSTALLED, REMOVE AND STOW THE UPPER CONNECTOR PINS (R104) FROM THE JOINT TOWARD THE BOOM TOP ON THE 12M INSERT (ITEM 100) LOCATED NEAREST THE BOOM HINGE. (SEE 58M AND 61M #290 BOOM SHOWN).
2. INSTALL INTERMEDIATE LINK ASSY (ITEM 108) AT THIS JOINT USING PIN AND SAFETY PIN PROVIDED WITH ITEM 108. (SEE DETAIL G).
3. INSTALL PENDANT (ITEM 109) FEMALE END ONTO INTERMEDIATE LINK ASSY (ITEM 108). ATTACH USING PIN AND SAFETY PIN SUPPLIED WITH INTERMEDIATE LINK ASSY. (SEE DEAIL G).
4. FROM EQUALIZER (R14) DETACH TIE BACK LINKS (R5) BY REMOVING PIN (R6), WASHER (R17) AND LOCKING PIN (R7). (SEE DETAIL B ON SHEET 1).
5. PIVOT TIE BACK LINKS TOWARD BOOM TOP AND INSTALL PENDANT (ITEM 109) MALE END BETWEEN TIE BACK LINKS AND REINSTALL PIN (R6), WASHER (R17) AND LOCKING PIN (R7) THRU SLOTTED HOLE. (SEE DETAIL H).

FOR REMOVAL OF INTERMEDIATE SUSPENSION (ITEM 108) REVERSE INSTALLATION STEPS 1 THRU 5.

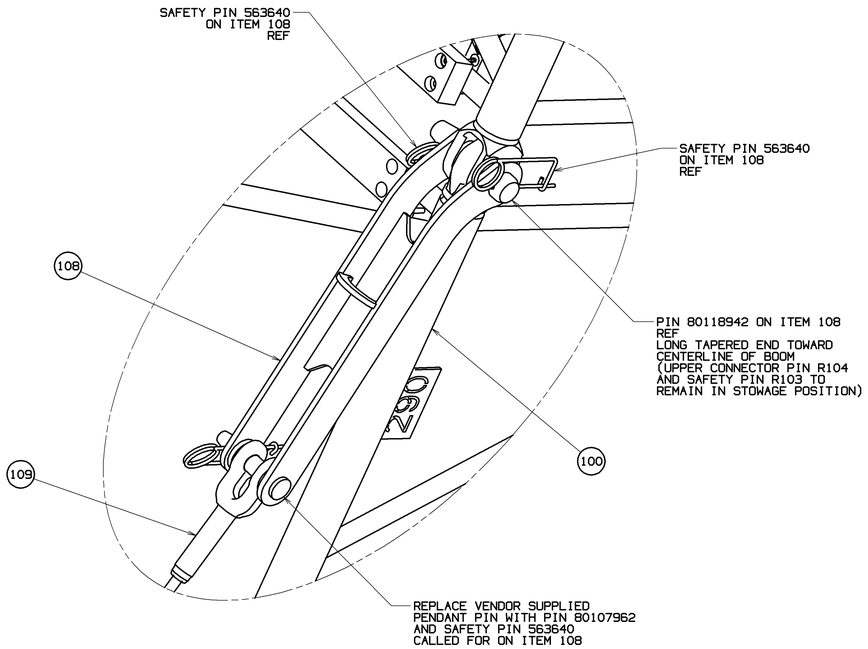

DETAIL G
SCALE 0.250

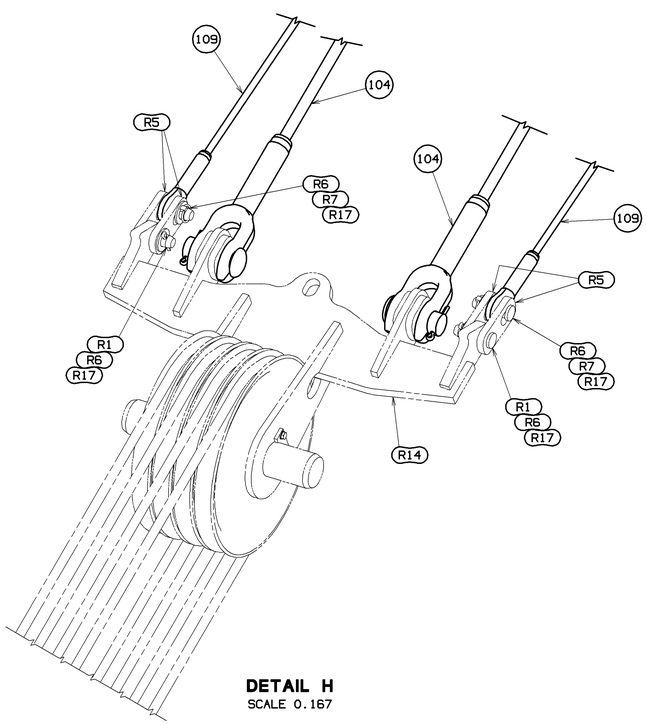

DETAIL H
SCALE 0.167

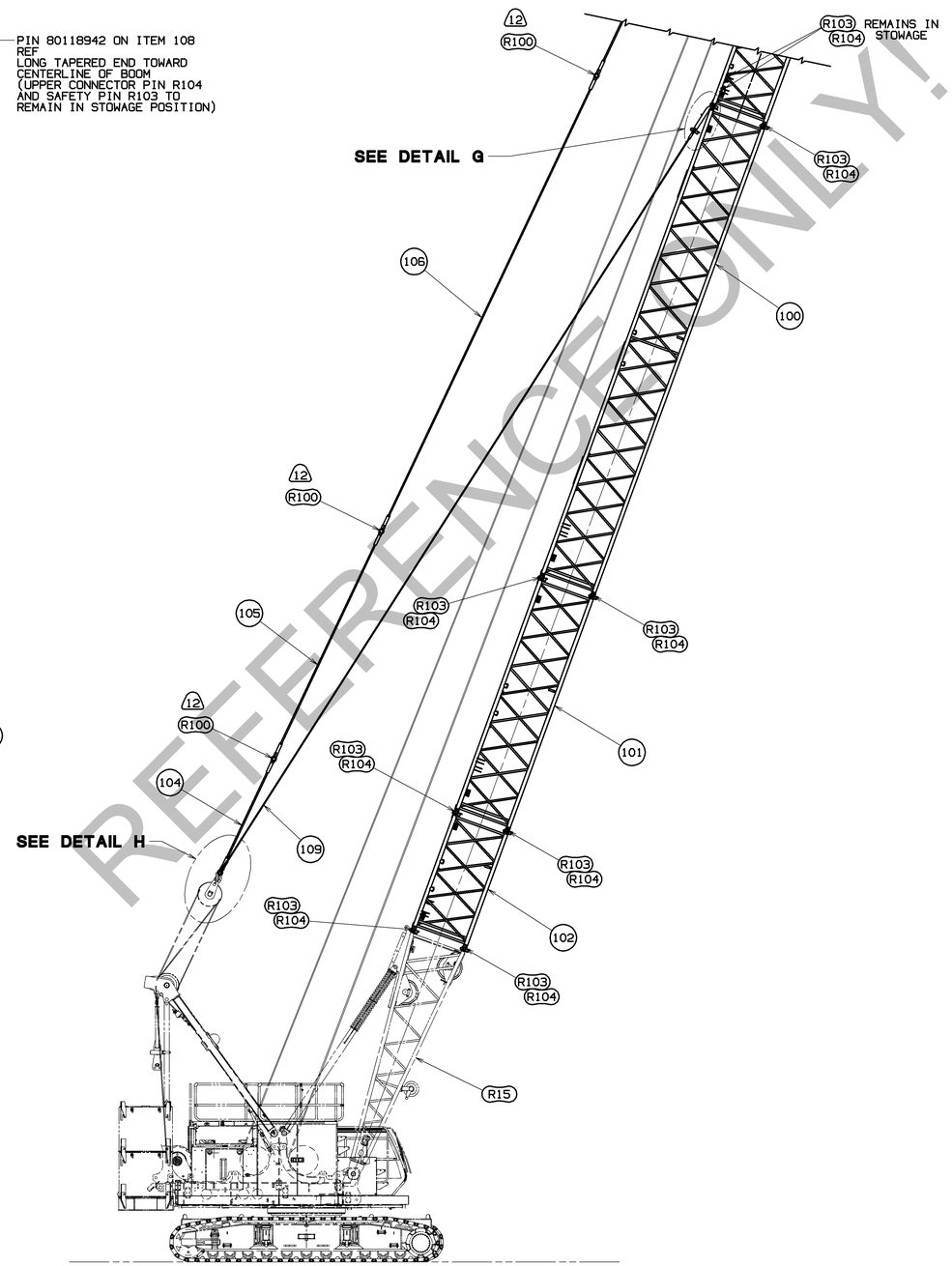

58.0 M (190.3 FT)
61.0 M (200.1 FT)
#290 BOOM SHOWN

REFERENCE ONLY!

DWG. NO.
80121888
SHT 6 OF 6

PRIVATE LABELING REQUIREMENT TO CONFORM TO ENGINEERING SPECIFICATION 6829103794 FOR COMPONENTS LISTED IN GDS500-05-035

DATE
08-05-19

REV. LTR.
A

THIS PRINT REMAINS THE PROPERTY OF MANITOWOC CRANES, INC. ALL INFORMATION CONTAINED THEREIN IS CONFIDENTIAL. IT IS LOANED, SUBJECT TO RETURN UPON DEMAND, AND ON EXPRESS CONDITION THAT IT IS NOT TO BE COPIED OR USED DIRECTLY OR INDIRECTLY IN ANY WAY WHATSOEVER DETRIMENTAL TO OUR INTERESTS.

TOLERANCE UNLESS OTHERWISE SPECIFIED

DECIMAL PLACES	FABRICATION ≤ 10 FEET	FABRICATION > 10 FEET	MACHINING
(1) PLACE 0.0	±.12	±.18	±.03
(2) PLACE 0.00	±.06	±.12	±.015
(3) PLACE 0.000			±.005
ANGLES	±1°30'		±0°30'

MACHINING TOLERANCE EXCEPTS SURFACE FINISH, DIAMETRICAL AND FORCE FITS.

SCALE .020
DR. RHV
CK. PJH
APP JRR

Manitowoc Cranes, Inc.
Manitowoc, Wisconsin

MODEL ML-C80A-1

BOOM RIGGING

B10:290

DWG. NO.
80121888

SHT 6 OF 6

DO NOT SCALE THIS DRAWING