OPERATOR MANUAL

Supplement

Crane Warm-up Procedures

Reference Only

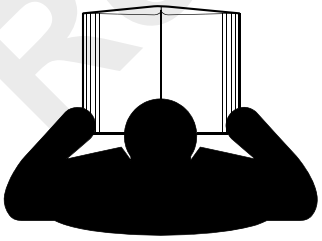

⚠DANGER

An untrained operator subjects himself and others to death or serious injury. Do not operate this crane unless:

- You are trained in the safe operation of this crane. Manitowoc is not responsible for qualifying personnel.
- You read, understand, and follow the safety and operating recommendations contained in the crane manufacturer's manuals and load charts, your employer's work rules, and applicable government regulations.
- You are sure that all safety signs, guards, and other safety features are in place and in proper condition.
- The Operator Manual and Load Chart are in the holder provided on crane.

© 2017 Manitowoc

Published 3-30-2017, Control # 516-04

SECTION CONTENTS

Crane Warm-up Procedures. 1
Engine. 1
Transmission 1
Hoist 1
Swing Drive and Turntable Bearing 1
Axles. 2
Hydraulic Oil System 2

Reference Only

This Supplement provides information regarding the proper warm-up procedures for operating the crane in colder temperatures. The information provided here supplements the *Operator* and *Service Manual*s and must be used in conjunction with these manuals.

COLD CLIMATE ENGINE OPERATION

Engine specific cold climate operation information is available through your Cummins dealer/service center under Service Bulletin 3379009.

CRANE WARM-UP PROCEDURES

The following procedures detail the actions that must be taken to properly warm the different crane components before operating the crane.

NOTE: For temperatures below -9°C (15°F) refer to arctic lubricants and conditions in the Operator and Service Manuals.

Before starting the crane, ensure the appropriate lubricants are used in order to provide lubrication for the prevailing ambient temperatures in which the crane will operate in (a list of lubricants and their temperature ranges can be found in the Lubrication section of your crane's *Operator Manual*, by contacting your local Manitowoc distributor, or by contacting Manitowoc Crane Care directly).

CAUTION

Crane Damage Hazard!

Operating the crane with the incorrect lubricants and fluids for the prevailing ambient temperature and/or failing to adequately warm the crane prior to cold weather operation can lead to a failure of a crane component or system.

Always use Manitowoc recommended lubricants and fluids for the prevailing ambient temperature and properly start and warm the crane using the cold weather procedures found in this Operator Manual and supplement before operating the crane at full load.

Engine

Warm-up Procedures for All Temperature Ranges:

1. Upon startup, allow the engine to idle for 3 to 5 minutes before operating with a load.
2. Cold Engine Startup: After allowing the engine to warm by idling it for 3 to 5 minutes, slowly increase the engine speed to provide adequate lubrication to the bearings and to allow the oil pressure to stabilize.

Transmission

Operating the transmission with a sump temperature below normal operating temperature is limited to:

- operating in the neutral gear or
- driving with an unloaded crane while not exceeding 1500 engine RPM and not exceeding half throttle.

Warm-up Procedures for Rough Terrain (RT) and Industrial Cranes:

1. Engage the parking brake and apply the service brake.
2. Shift the transmission into the highest gear and increase the engine RPM to 1500 for 15 seconds, then allow the engine RPM to return to idle.
3. Repeat Step 2 until the temperature of the transmission sump reaches normal operating temperature.

Alternate Warm-up Procedures for Rough Terrain (RT) and Industrial Cranes:

1. Setup the crane on outriggers.
2. Engage the transmission with 4-wheel drive selected (if equipped) and allow crane to run at idle until the temperature of the transmission sump reaches normal operating temperature.

NOTE: Warm-up operation of 4-wheel drive transmission engaged in 2-wheel drive only could cause transmission damage.

Alternate Warm-up Procedures for Truck Mount (TM/TMS) Cranes:

1. Setup the crane on outriggers.
2. Engage the transmission and allow crane to run at idle until the temperature of the transmission sump reaches normal operating temperature.

Hoist

Performing a warm-up procedure is recommended at every startup and is required at ambient temperatures below 4°C (40°F).

Warm-up Procedures:

1. Without operating the hoist function, warm the hydraulic oil (see *Hydraulic Oil System*, page 2-2).
2. Once the hydraulic system is warm, operate the unloaded hoist, in both directions, at low speeds several times to prime all hydraulic lines with warm hydraulic oil and to circulate gear lubricant through the planetary gear sets.

Reference Only

Swing Drive and Turntable Bearing

Warm-up Procedures for Temperatures Above -7°C (20°F):

1. Setup the crane on fully extended outriggers, with the boom fully retracted and near maximum lift angle with no load applied.
2. Rotate the superstructure at a speed of less than one RPM for at least one complete revolution in one direction, then rotate the superstructure at a speed of less than one RPM for at least one complete revolution in the opposite direction.

Warm-up Procedures for Temperatures Below -7°C (20°F):

1. Ensure the boom is fully retracted and near maximum lift angle with no load applied.
2. Rotate the superstructure at a speed of less than one-half RPM for at least two complete revolutions in one direction, then rotate the superstructure at a speed of less than one-half RPM for at least two complete revolutions in the opposite direction.

Axles

Warm-up Procedures for Temperatures Below -35°C (-30°F):

1. Setup the crane on outriggers.
2. Engage the transmission (see *Transmission*, page 2-1) with 4-wheel drive selected (if equipped) and allow crane to run at idle until the temperature of the transmission sump reaches normal operating temperature.

NOTE: Warm-up operation of 4-wheel drive transmission engaged in 2-wheel drive only could cause transmission damage.

Hydraulic Oil System

Operating Limits and Warm-up Procedures:

- **From 4°C to -10°C (40°F to 15°F):** Crane operation without a load is allowed with medium engine RPM and medium function speed (joystick position) until the fluid reaches at least 10°C (50°F). It is then recommended that all crane functions be cycled to remove cold fluid from all components and cylinders of the hydraulic system. If there is any unusual sound coming from the crane's hydraulic pumps or motors, stop the operation and engine immediately and contact a Manitowoc distributor.
- **From 10°C to 4°C (50°F to 40°F):** Crane operation with a load is allowed with medium engine RPM and medium function speed (joystick position) until the fluid reaches at least 10°C (50°F).
- **From 95°C to 10°C (200°F to 50°F):** Crane operation with a load is allowed with no restrictions.
- **Above 95°C (200°F):** No crane operation is allowed. Let the crane's hydraulic oil cool by running the engine at idle with no functions actuated.

Reference Only

Grove RT770E

Operator Manual

Reference Only

Grove Manitowoc National Crane Potain

Manitowoc

Reference Only

OPERATOR MANUAL

This manual has been prepared for and is considered part of -

RT770E

Crane Model Number

This Manual is divided into the following sections:

SECTION 1	**INTRODUCTION**
SECTION 2	**SAFETY**
SECTION 3	**OPERATING CONTROLS AND PROCEDURES**
SECTION 4	**SET-UP AND INSTALLATION**
SECTION 5	**LUBRICATION**
SECTION 6	**MAINTENANCE CHECKLIST**

NOTICE

The crane serial number is the only method your distributor or the factory has of providing you with correct parts and service information.

The crane serial number is identified on the builder's decal attached to the operator cab. ***Always furnish crane serial number*** when ordering parts or communicating service problems with your distributor or the factory.

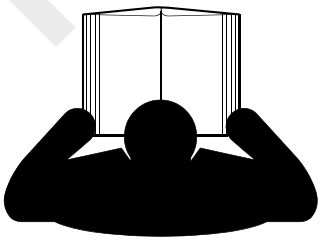

⚠DANGER

An untrained operator subjects himself and others to death or serious injury. Do not operate this crane unless:

- You are trained in the safe operation of this crane. Manitowoc is not responsible for qualifying personnel.
- You read, understand, and follow the safety and operating recommendations contained in the crane manufacturer's manuals and load charts, your employer's work rules, and applicable government regulations.
- You are sure that all safety signs, guards, and other safety features are in place and in proper condition.
- The Operator Manual and Load Chart are in the holder provided on crane.

© 2015 Manitowoc
Published 9-29-2015, Control # 521-02

Reference Only

CALIFORNIA
PROPOSITION 65 WARNING

Diesel engine exhaust and some of its constituents are known to the State of California to cause cancer, birth defects, and other reproductive harm.

CALIFORNIA
PROPOSITION 65 WARNING

Battery posts, terminals, and related accessories contain chemical lead and lead compounds, chemicals known to the State of California to cause cancer, birth defects or other reproductive harm. Wash hands after handling.

The original language of this publication is English.

Reference Only

TABLE OF CONTENTS

SECTION 1 . . . . . Introduction
General 1-1
Customer Support 1-1
Noise/vibration test results 1-1
Noise Level Test Results 1-1
Vibration Level Test Results 1-2
Serial Number Location 1-2
List Of Specifications 1-5
General 1-5
Dimensions 1-5
Capacities 1-5
Torque Converter 1-5
Transmission 1-5
Engine 1-5
Axles 1-5
Brakes 1-5
Wheels and Tires 1-5
Swing Gearbox 1-5
Boom 1-5
Swivel Assembly 1-5
Hydraulic Pumps 1-5
Hoists 1-6

SECTION 2 . . . . . Safety Information
Safety Messages 2-1
General 2-1
Safety Alert Symbol 2-2
Signal Words 2-2
General 2-2
Warning Signs 2-2
Accidents 2-2
Operator Information 2-3
Operator Qualifications 2-3
Operational Aids 2-4
Rated Capacity Limiter (RCL) Systems (If Equipped) 2-4
Anti-Two-Blocking Device 2-5
Working Area Limiter (If Equipped) 2-5
Crane Stability/Structural Strength 2-6
Load Charts 2-6
Work Site 2-6
Wind Forces 2-7
Wind Speeds 2-8
Lifting Operations 2-20
Counterweight 2-20
Outrigger Lift Off 2-21
Multiple Crane Lifts 2-21
Tilt-Up Panel Lifting 2-21
Pile Driving and Extracting 2-22
Crane Equipment 2-22
Crane Inspection 2-22

Reference Only

Electrocution Hazard 2-23
Set-Up and Operation 2-24
Electrocution Hazard Devices 2-24
Electrical Contact 2-25
Special Operating Conditions and Equipment 2-25
Personnel Handling 2-25
Environmental Protection 2-26
Maintenance 2-27
Service and Repairs 2-27
Lubrication 2-28
Tires 2-28
Hoist Rope 2-28
Wire Rope 2-28
Synthetic Hoist Rope 2-30
Sheaves 2-30
Batteries 2-30
Engine 2-31
Transporting the Crane 2-31
Travel Operation 2-31
Work Practices 2-32
Personal Considerations 2-32
Crane Access 2-32
Job Preparation 2-33
Working 2-33
Lifting 2-34
Hand Signals 2-35
Jib 2-37
Parking and Securing 2-37
Shut-Down 2-37
Cold Weather Operation 2-37
Temperature Effects on Hook Blocks 2-38
Temperature Effects on Hydraulic Cylinders 2-38
Model Specific Information 2-40
Crane Stability 2-40
Access Platform Hand Rail 2-40
Overload Inspection 2-40
Boom Inspection 2-41
Superstructure Inspection 2-43
Carrier Inspection 2-45

SECTION 3. . . . . Operating Controls and Procedures

Controls and Indicators 3-2
Steering Column 3-3
Turn Signal Lever and Windshield Wiper/Washer/Headlight /Horn Controls 3-3
Steering Column Adjustment Lever 3-3
Park Brake Control Switch 3-3
Headlights Switch 3-3
Drive Axle Selector Switch 3-3
Hazard Lights Switch 3-3
Engine Diagnostic and Engine Speed Control Switches 3-4
Ignition Switch 3-4
Transmission Shift Lever 3-4

Reference Only

Cab Overhead Controls . . . 3-5
Skylight Window Latch . . . 3-5
Skylight Wiper . . . 3-5
Skylight Sunscreen . . . 3-5
Dome Light . . . 3-5
Cab Circulating Fan . . . 3-5
Right Side Window Latch . . . 3-5
Overhead Control Panel . . . 3-6
Heater/Air Conditioner Fan Switch . . . 3-6
Heater Control Switch . . . 3-6
Air Conditioner Switch . . . 3-6
Skylight Wiper Switch . . . 3-6
Panel Dimmer Switch . . . 3-6
Work Lights Switch . . . 3-6
Boom Lights Switch (Optional) . . . 3-7
Crane Function Power Switch . . . 3-7
Hoist Rotation Indicator Display . . . 3-7
Exhaust System Cleaning Switch . . . 3-7
Boom Section 1/Section 2 Selector Switch and Indicator . . . 3-7
Boom Manual/Automatic Mode Selector Switch and Indicator . . . 3-8
Boom A/B Mode Selector Switch and Indicator . . . 3-8
Boom Recovery Mode Switch and Indicator . . . 3-8
Steering Column Indicator and Gauge Display . . . 3-9
Swing Brake Engaged . . . 3-10
Parking Brake Engaged . . . 3-10
Light Malfunction . . . 3-10
Emergency Stop . . . 3-10
Hydraulic Oil High Temperature . . . 3-10
Transmission Warning . . . 3-10
Low Steer Pressure (Optional on CE Units) . . . 3-10
Left Turn Signal Indicator . . . 3-10
Low Brake Pressure . . . 3-10
Electronic Module Indicator . . . 3-10
Electronic System Diagnostic . . . 3-10
LCD Display . . . 3-11
Engine Stop . . . 3-11
Engine Warning . . . 3-11
Exhaust System Cleaning Indicator . . . 3-11
Right Turn Signal Indicator . . . 3-12
Inhibit Exhaust System Cleaning Indicator . . . 3-12
Diesel Exhaust Fluid Indicator . . . 3-12
High Exhaust System Temperature Indicator . . . 3-12
Engine Wait-to-Start Indicator . . . 3-12
Four-Wheel Drive Engaged Indicator . . . 3-12
Axle Differential Locked Indicator . . . 3-12
Rear Wheels Not Centered Indicator . . . 3-12
Engine Coolant Temperature Gauge . . . 3-12
Fuel Gauge . . . 3-12
Low Fuel Level Indicator . . . 3-13
Battery Charge Indicator . . . 3-13
Voltmeter . . . 3-13
Tachometer . . . 3-13
DEF Tank Level/Gauge . . . 3-13

Reference Only

Control Seat Assembly (Single Axis) 3-14
Main Hoist Joystick (Single Axis) 3-14
Boom Lift Joystick (Single Axis) 3-14
Boom Lift and Main Hoist Joystick (Dual Axis Option) 3-14
Main Hoist Speed Selector Switch 3-14
Telescope or Auxiliary Hoist Joystick (Single Axis) 3-15
Swing Joystick (Single Axis) 3-15
Swing and Telescope or Swing and Auxiliary Hoist Joystick (Dual Axis Option) . . 3-15
Auxiliary Hoist Speed Selector Switch (Optional) 3-15
Rear Steer Switch 3-15
Swing Brake Control Switch 3-15
Axle Differential Lock Control Switch (Optional) 3-16
Cab Door Release 3-16
Seat Back Adjustment 3-16
A/C Heater, Climate Control 3-16
Seat Slide Lever 3-16
Seat Frame Slide Lever 3-16
Armrest Adjustment 3-16
Hoist Rotation Indicators 3-16
HRI Display 3-16
Hydraulic Boost Switch 3-16
Armrest Switch 3-16
Seat Switch 3-16
Side Control Panel 3-17
Rated Capacity Limiter (RCL) and Work Area Definition System (WADS) Control Panel 3-17
Rated Capacity Limiter (RCL) Bypass Switch 3-17
Emergency Stop Switch 3-17
Transmission Oil Temperature Gauge 3-17
Turntable Pin Swing Lock Control 3-17
12V Receptacle 3-18
Diagnostic Connector 3-18
Bubble Level Indicator 3-18
Hoist Third Wrap Indicator (Optional—Standard on CE) 3-18
Cold Weather Indicator (Optional) 3-18
Ambient Temperature LED Indicator 3-18
Boom Not Synchronized Indicator 3-18
Outrigger Control 3-18
Foot Pedal Controls 3-19
360° Swing Lock Pedal 3-19
Swing Brake Pedal 3-19
Telescope Control Foot Pedal (Optional) 3-19
Service Brake Foot Pedal 3-19
Foot Throttle Pedal 3-19
Miscellaneous Controls and Indicators 3-20
Fuse Panel 3-20
Buzzer 3-20
Rated Capacity Limiter (RCL) Emergency Override Switch (Non-CE Certified Cranes) 3-20
Rated Capacity Limiter (RCL) Emergency Override Switch and Indicator (CE Certified Cranes) 3-20
RCL Internal Light Bar (Optional) 3-21
Strobe Light or Beacon (Optional) 3-21
Backup Alarm 3-21
Emergency Exit 3-21

Reference Only

Operating Procedures 3-21
Pre-Starting Checks 3-21
Cold Weather Operation 3-22
Crane Warm-up Procedures 3-24
Engine 3-24
Transmission 3-25
Hoist 3-25
Swing Drive and Turntable Bearing 3-25
Axles 3-25
Hydraulic Oil System 3-25
Engine Operation 3-26
Transporting the Crane 3-27
Crane Travel Operation 3-27
General Crane Operation 3-35
Stowing and Parking 3-41
Unattended Crane 3-41

SECTION 4 . . . . . Set-Up and Installation
General 4-1
Accessing the Hoist Area (Fixed counterweight units only) 4-1
Travel Configuration 4-1
Working Position 4-2
Installing Cable on the Hoist 4-2
Cable Reeving 4-2
Boom Cable Reeving 4-3
Dead-End Rigging/Wedge Sockets 4-3
Installing Wedge and Socket 4-3
Erecting and Stowing the Bi-fold Boom Extension 4-8
Description 4-8
Boom Extension Rigging Mode 4-8
Erecting the Boom Extension 4-8
Stowing the Boom Extension 4-15
Setting the Folding Swingaway Offset 4-17
Erecting and Stowing the Bi-fold Boom Extension with the 6.1 m (20 ft) Insert 4-18
Erecting 4-18
Stowing 4-20
Fixed Counterweight 4-21
Description 4-21
Maintenance 4-21
Removable Counterweight (Optional) 4-23
Removal 4-23
Installation 4-23

SECTION 5 . . . . . Lubrication
General 5-1
Environmental Protection 5-1
Lubricants and Lubrication Intervals 5-1
Standard Lubricants 5-2
Arctic Lubricants and Conditions 5-3
Surface Protection for Cylinder Rods 5-6
Wire Rope Lubrication 5-6
Lubrication Points 5-7
CraneLUBE 5-7
Safety 5-7
Steering and Suspension 5-8
Axles 5-10

Reference Only

Drive Train 5-12
Drive Train (continued) 5-14
Turntable 5-16
Outriggers 5-18
Boom 5-20
Hoist. 5-32
Hydraulic 5-34

SECTION 6. . . . . Maintenance Checklist
General. 6-1
Instructions 6-1
Daily or 10 Hour Check List 6-1
Weekly or 50 Hour Check List 6-2

SECTION 7. . . . . Alphabetical Index

Reference Only

SECTION 1
INTRODUCTION

SECTION CONTENTS

General 1-1
Customer Support 1-1
Noise/vibration test results 1-1
Noise Level Test Results 1-1
Vibration Level Test Results 1-2
Serial Number Location 1-2
List Of Specifications 1-5
General 1-5
Dimensions 1-5
Capacities 1-5
Torque Converter 1-5
Transmission 1-5
Engine 1-5
Axles 1-5
Brakes 1-5
Wheels and Tires 1-5
Swing Gearbox 1-5
Boom 1-5
Swivel Assembly 1-5
Hydraulic Pumps 1-5
Hoists 1-6

Reference Only

GENERAL

NOTE: Throughout this manual, reference is made to left, right, front, and rear when describing locations. These reference locations are to be considered as those viewed from the operator seat with the superstructure facing forward over the front of the carrier frame.

This Operator Manual provides important information for the operator of the Model RT770E Grove Crane.

The rough terrain crane incorporates an all welded steel frame, using planetary drive axles to provide four-wheel drive. Axle steering is accomplished utilizing hydraulic steer cylinders. The engine is mounted at the rear of the crane and provides motive power through a six speed forward and reverse transmission. Hydraulic, double box, sliding beam outriggers are integral with the frame.

The carrier frame incorporates an integral fifth wheel, to which the rear axle is mounted, to provide axle oscillation. Axle oscillation lockout is automatic when the superstructure rotates from the travel position.

The superstructure is capable of 360° rotation in either direction. All crane functions are controlled from the fully-enclosed cab mounted on the superstructure. The crane is equipped with a four-section, full power, sequenced and synchronized boom. Additional reach is obtained by utilizing an optional swingaway boom extension. Lifting is provided by a main hoist and an optional auxiliary hoist.

Customer Support

Manitowoc and our distributor network want to ensure your satisfaction with our products and customer support. Your local distributor is the best equipped and most knowledgeable to assist you for parts, service and warranty issues. They have the facilities, parts, factory trained personnel, and the information to assist you in a timely manner. We request that you first contact them for assistance. If you feel you need factory assistance, please ask the distributor's service management to coordinate the contact on your behalf.

New Owners

If you are the new owner of a Grove crane, please register it with Manitowoc Crane Care so we have the ability to contact you if the need arises.

Go to: http://www.manitowoccranes.com/MCG_CARE/Includes/EN/changeofownership.cfm and complete the form.

NOISE/VIBRATION TEST RESULTS

Noise Level Test Results

- When equipped with the CE certification package, the guaranteed sound power level is L_{wa} 105 dB(A) as measured by Directive 2000/14/EC and 80 db(A) at the crane operator position as measured by Annex G.1 of EN 13000:2010+A1:2014.

Vibration Level Test Results

- At the operator station with closed cab operation, vibration levels are less than 0.5 m/s/s for Whole Body Vibration exposure and are less than 2.5 m/s/s for Hand Arm Vibration exposure when measured according to 89/392/EEC Community Legislation on Machinery per standard ISO 2631/1 - Evaluation of Human Exposure to Work Body Vibration, ISO 5349 - Guidelines for the Measurement and Assessment of Human Exposure to Hand Transmitted Vibrations, and ISO/DIS 8041 - Human Response Vibration Measuring Instrumentation.

SERIAL NUMBER LOCATION

Refer to Figure 1-1.

Whenever contacting your local Grove distributor or Manitowoc Crane Care have the serial number of the crane available.

Serial Number Locations **FIGURE 1-1**

Reference Only

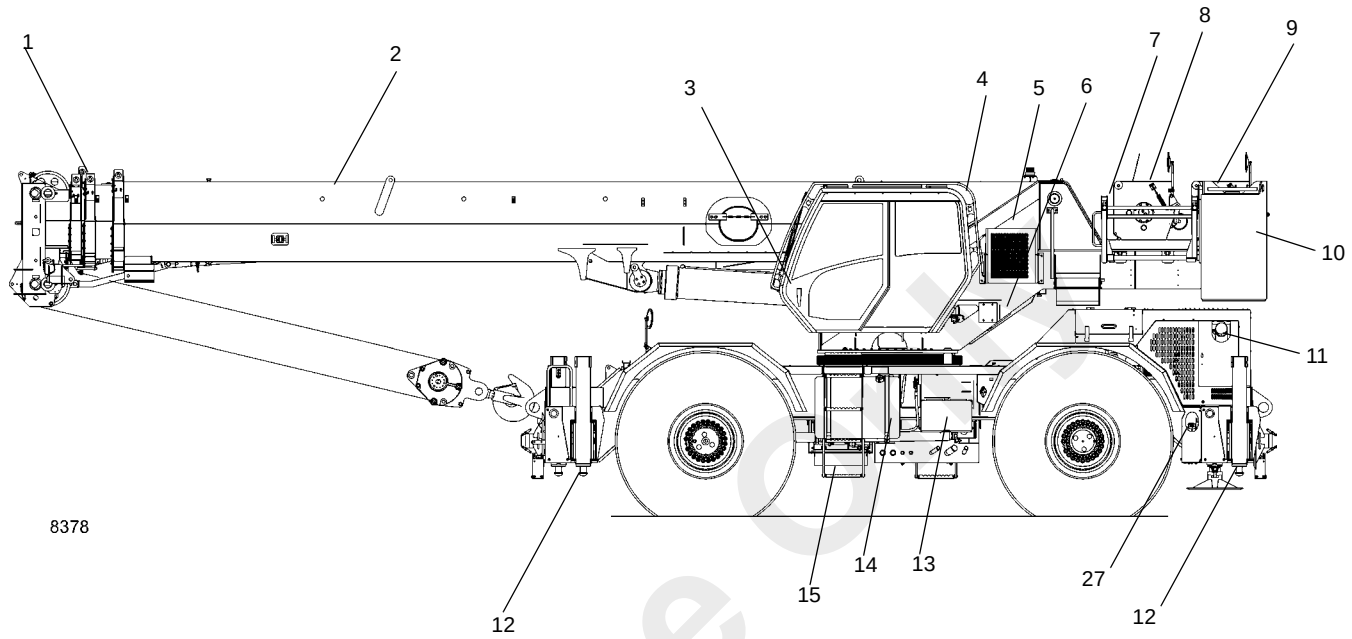

FIGURE 1-2

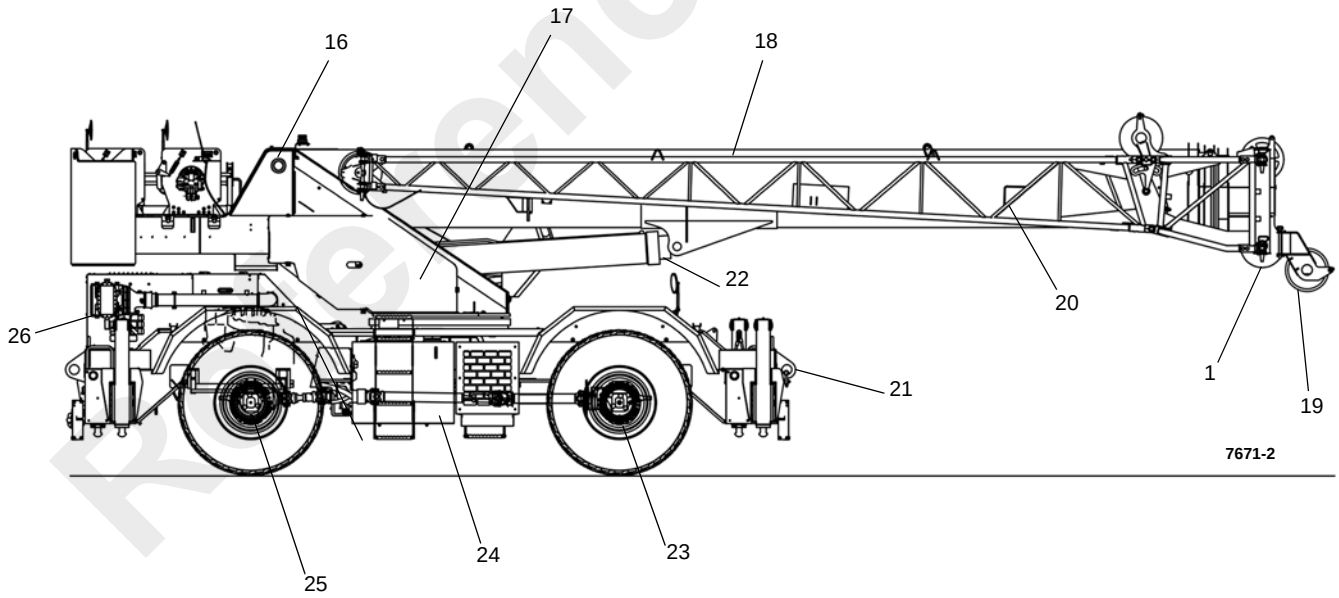

FIGURE 1-2 continued

Item	Description
1	Boom Nose Sheaves
2	Boom
3	Work Lights
4	Cab
5	Air Conditioning Components
6	Windshield Washer Fluid Container
7	Hoist Access Platform (Fixed Counterweight Units Only)
8	Main Hoist

Reference Only

Item	Description
9	Auxiliary Hoist
10	Counterweight
11	Muffler
12	Outrigger Jack Cylinder
13	Battery
14	Fuel Tank (Tier 4 engines require Low Sulphur Fuel only!)
15	Crane Steps
16	Boom Pivot Pin
17	Hydraulic Valves and Swing Motor Cover
18	Swingaway Extension
19	Auxiliary Boom Nose
20	Boom Extension
21	Outrigger Floats
22	Lift Cylinder
23	Front Axle
24	Hydraulic Fluid Tank
25	Rear Axle
26	Air Intake Cleaner
27	DEF Tank

Reference Only

LIST OF SPECIFICATIONS

General

Model RT770E
Rated Capacity. . . . . .See Load Chart in cab
Drive. . . . . .4 x 4 x 4
Gross Weight . . See Axle Weight Distribution Table

Dimensions

NOTE: Dimensions listed are for a crane with all components fully retracted in the travel mode with 29.5 x 25 tires.

Wheelbase . . . . . 4.06 m (160 in)
Overall Crane Length . . . . . 13.6 m (44.6 ft)
Overall Crane Width. . . . . .3.33 m (11.0 ft)
Overall Crane Height . . . . . 3.60 m (10.9 ft)
Outside Turning Radius
2 Wheel Steer . . . . . 11.342 m (37 ft 2.55 in)
4 Wheel Steer . . . . . .6.744 mm (22 ft 1.5 in)
Outside Curb Clearance
2 Wheel Steer . . . . . 11.7 m (38 ft 5.88 in)
4 Wheel Steer . . . . . 7.1 m (23 ft 3.5 in)
Outrigger Spread
Retracted. . . . . .3.18 m (10 ft 5 in)
Mid Extend . . . . . .5.28 m (17 ft 4 in)
Fully Extended . . . . . .7.11 m (23 ft 4 in)

Capacities

Fuel Tank . . . . . 280 L (74 gal)
Coolant System . . . . . See Engine
. . . . . .Specifications
Engine Lubrication System . . . . . See Engine
. . . . . .Specifications
Hydraulic Tank (Reservoir Capacity)
Total. . . . . 717 L (189.5 gal)
Full Level. . . . . 640 L (169 gal)
Hoists . . . . . .
Model GHP-30A . . . . . 14.7 L (15.5 qt)
Swing Gearbox. . . . . 4.9 L (5.25 qt)
Axle Planetary Ends. . . . . 4 L (8 pt)
Axle Differentials . . . . . 23 L (48 pt)
Transmission (includes Torque Converter)
. . . . . 38 L (40 qt)
DEF Tank . . . . . 19 L (5 gal)

Torque Converter

Stall Ratio 1.82:1
Charge Pump Capacity . . . . . 76 L/min (20 gpm)
. . . . . .@ 2000 rpm

Transmission

Gear Ratios
Forward and Reverse
Low Range
1st 12.59
2nd 6.06
3rd. 2.22
High Range
4th 4.33
5th 2.08
6th 0.76

Engine

Cummins QSB 6.7

Type . . . . . 4 cycle, Diesel, Turbocharged
Number of Cylinders 6
Horse Power Rating. 194 kW (260 hp) @ 2500 rpm
Oil Pan Capacity . . . . . .15.6 L (18.5 qt)
Coolant System . . . . . .38 L (40 qt)

Axles

Total Ratio 24.817:1
Carrier Ratio 5.86:1
Planetary Ratio 4.235:1

Brakes

Type . . . . . Hydraulic Disc
Size . . . . . .470 x 16 mm (18.5 x 0.63 in)

Wheels and Tires

Lugs 24
Torque . . . . . 461 to 488 Nm (340 to 360 lb-ft)
Tire Size
Standard . . . . . .29.5 x 25, 28 ply rating
Optional . . . . . 29.5R25, 34 ply rating

NOTE: For roading and lifting pressures, refer to the Load Chart Book in the cab.

Swing Gearbox

Reduction Ratio 36:1
Output Torque . . . . . 45,000 in-lb

Boom

Length . . . . . .11 to 42 m (35.9 to 137.9 ft)
Power. . . . . 5 Tele Section, Full Power
Elevation . . . . . .-3 to +78 degrees
Extensions
Fixed* . . . . . 10 m (32.6 ft)
Folding*. . . . . 10 or 17 m (32.6 or 56 ft)
*Extensions are offset at 0, 25, or 45 degrees.

Swivel Assembly

Electrical . . . . . 20 Slip Rings
Hydraulic . . . . . 12 ports
Water . . . . . 2 ports

Hydraulic Pumps

NOTE: Pump output figures are theoretical.

Pump #1

Type . . . . . .Gear
Sections 2
Output - @ loaded engine speed
Section 1. . . . . .191 L/min (50.4 gpm)
Section 2. . . . . .95 L/min (25.1 gpm)

Pump #2

Type . . . . . .Gear
Sections 1
Output - @ loaded engine speed
Section 1. . . . . .105 L/min (27.8 gpm)

Reference Only

Pump #3

Type . . . . . Gear
Sections 1
Output - @ loaded engine speed
Section 1 . . . . . 120 L/min (31.7 gpm)

Hoists

Drum Dimensions
Diameter . . . . . 381 mm (15 in)
Length (Standard) . . . . . .467 mm (18.38 in)

Cable
Diameter . . . . . .19 mm (0.75 in)
Length-Main. . . . . 198 m (650 ft)
Length-Aux. . . . . 199 m (653 ft)
Max. Permissible Line Pull (6x36)
. . . . . 74.7 kN (16,800 lb)
Max. Single Line Speed . . . . . .153 m/min (500 fpm)

Reference Only

SECTION 2
SAFETY INFORMATION

SECTION CONTENTS

Safety Messages 2-1
General 2-1
Safety Alert Symbol 2-2
Signal Words 2-2
General 2-2
Warning Signs 2-2
Accidents 2-2
Operator Information 2-3
Operator Qualifications 2-3
Operational Aids 2-4
Rated Capacity Limiter (RCL) Systems (If Equipped) 2-4
Anti-Two-Blocking Device 2-5
Working Area Limiter (If Equipped) 2-5
Crane Stability/Structural Strength 2-6
Load Charts 2-6
Work Site 2-6
Wind Forces 2-7
Wind Speeds 2-8
Lifting Operations 2-20
Counterweight 2-20
Outrigger Lift Off 2-21
Multiple Crane Lifts 2-21
Tilt-Up Panel Lifting 2-21
Pile Driving and Extracting 2-22
Crane Equipment 2-22
Crane Inspection 2-22
Electrocution Hazard 2-23
Set-Up and Operation 2-24
Electrocution Hazard Devices 2-24
Electrical Contact 2-25
Special Operating Conditions and Equipment . . 2-25
Personnel Handling 2-25
Environmental Protection 2-26
Maintenance 2-27
Service and Repairs 2-27
Lubrication 2-28
Tires 2-28
Hoist Rope 2-28
Wire Rope 2-28
Synthetic Hoist Rope 2-30
Sheaves 2-30
Batteries 2-30
Engine 2-31
Transporting the Crane 2-31
Travel Operation 2-31
Work Practices 2-32
Personal Considerations 2-32
Crane Access 2-32
Job Preparation 2-33
Working 2-33
Lifting 2-34
Hand Signals 2-35
Jib 2-37
Parking and Securing 2-37
Shut-Down 2-37
Cold Weather Operation 2-37
Temperature Effects on Hook Blocks 2-38
Temperature Effects on Hydraulic Cylinders . . . 2-38
Model Specific Information 2-40
Crane Stability 2-40
Access Platform Hand Rail 2-40
Overload Inspection 2-40
Boom Inspection 2-41
Superstructure Inspection 2-43
Carrier Inspection 2-45

SAFETY MESSAGES

General

The importance of safe operation and maintenance cannot be overemphasized. Carelessness or neglect on the part of operators, job supervisors and planners, rigging personnel, and job site workers can result in their death or injury and costly damage to the crane and property.

To alert personnel to hazardous operating practices and maintenance procedures, safety messages are used

Reference Only

throughout the manual. Each safety message contains a safety alert symbol and a signal word to identify the hazard's degree of seriousness.

Safety Alert Symbol

This safety alert symbol means **ATTENTION!** Become alert **- your safety is involved!** Obey all safety messages that follow this symbol to avoid possible death or injury.

Signal Words

DANGER

Identifies **hazards** that will result in death or serious injury if the message is ignored**.**

WARNING

Identifies **hazards** that may result in death or serious injury if the message is ignored**.**

CAUTION

Identifies **hazards** that could result in minor or moderate injury if the message is ignored.

CAUTION

Without the safety alert symbol, identifies **hazards** that could result in property damage if the message is ignored.

NOTE: Emphasizes operation or maintenance procedures.

GENERAL

It is impossible to compile a list of safety precautions covering all situations. However, there are basic principles that **must** be followed during your daily routine. Safety is **your primary responsibility**, since any piece of equipment is only as safe **as the person at the controls**.

Read and follow the information located in *Model Specific Information* near the end of this section.

This information has been provided to assist in promoting a safe working atmosphere for yourself and those around you. It is not meant to cover every conceivable circumstance which could arise. It is intended to present basic safety precautions that should be followed in daily operation.

Because you are the only part of the crane that can think and reason, your responsibility is not lessened by the addition of operational aids or warning devices. Indeed, you must guard against acquiring a false sense of security when using them. They are there to assist, not direct the operation. Operational aids or warning devices can be mechanical, electrical, electronic, or a combination thereof. They are subject to failure or misuse and should not be relied upon in place of good operating practices.

You are the only one who can be relied upon to assure the safety of yourself and those around you. Be a **professional** and follow the **rules of safety**.

Remember, failure to follow just one safety precaution could cause an accident that results in death or serious injury to personnel or damage to equipment. You are responsible for the safety of yourself and those around you.

Warning Signs

Refer to the *Parts Manual* for a drawing indicating the location of warning signs on the crane.

ACCIDENTS

Following any accident or damage to equipment, the Manitowoc dealer must be immediately advised of the incident and consulted on necessary inspections and repairs. Should the dealer not be immediately available, contact should be made directly with Manitowoc Product Safety at the address below. The crane must not be returned to service until it is thoroughly inspected for any evidence of damage. All damaged parts must be repaired or replaced as authorized by your Manitowoc distributor and/or Manitowoc Crane Care.

If this crane becomes involved in a property damage and/or personal injury accident, **immediately** contact your Manitowoc distributor. If the distributor is unknown and/or cannot be reached, contact Product Safety at:

The Manitowoc Company, Inc.
1565 East Buchanan Trail
Shady Grove, PA 17256-0021

Phone: 888-777-3378 (888-PSR.DEPT)
717-597-8121
Fax: 717-593-5152
E-mail: product.safety@manitowoc.com

Reference Only

OPERATOR INFORMATION

You must **read** and **understand** this *Operator Manual* and the *Load Chart* before operating your new crane. You must also **view** and **understand** the supplied safety video. This manual and *Load Chart* must be readily available to the operator at all times and must remain in the cab (if equipped) or operator's station while the crane is in use.

The *Operator Manual* supplied with and considered part of your crane must be read and completely understood by each person responsible for assembly, disassembly, operation and maintenance of the crane.

No personnel shall be allowed to climb onto the crane or enter the crane cab or operator's station unless performance of their duties require them to do so, and then only with knowledge of the operator or other qualified person.

Allow **No One** other than the operator to be on the crane while the crane is operating or moving, unless they are seated in a two-man cab.

Do not remove the *Load Chart*, this *Operator Manual*, or any decal from this crane.

Inspect the crane every day (before the start of each shift). Ensure that routine maintenance and lubrication are being dutifully performed. Don't operate a damaged or poorly maintained crane. You risk lives when operating faulty machinery - including your own.

If adjustments or repairs are necessary, the operator shall notify the next operator.

OPERATOR QUALIFICATIONS

Qualified person is defined as one who by reason of knowledge, training and experience is thoroughly familiar with crane operations and the hazards involved. Such a person shall meet the operator qualifications specified in Occupational Safety and Health Administration (OSHA) Regulations (United States Federal Law), in ASME B30.5 American National Standard, or in any other applicable federal, state or local laws.

Ensure that all personnel working around the crane are thoroughly familiar with safe operating practices. You must be thoroughly familiar with the location and content of all placards and decals on the crane. Decals provide important instructions and warnings and must be read prior to any operational or maintenance function.

Refer to the *Parts Manual* for this crane for the locations of all safety decals.

You must be familiar with the regulations and standards governing cranes and their operation. Work practice requirements may vary slightly between government regulations, industry standards, and employer policies so a thorough knowledge of all such relevant work rules is necessary.

An untrained operator subjects himself and others to death or serious injury.

You must not operate this crane unless:

- You have been trained in the safe operation of this crane.
- You read, understand, and follow the safety and operating recommendations contained in the manufacturer's manuals, your employer's work rules, and applicable government regulations.
- You are sure the crane has been inspected and maintained in accordance with the manufacturer's manuals and is operating properly.
- You are sure that all safety signs, guards, and other safety features are in place and in proper condition.

Do not attempt to operate the crane unless you are trained and thoroughly familiar with all operational functions. Controls and design may vary from crane to crane; therefore,

Reference Only

it is important that you have specific training on the particular crane you will be operating.

Training is ESSENTIAL for proper crane operation. Never jeopardize your own well-being or that of others by attempting to operate a crane on which you have not been trained.

You must be mentally and physically fit to operate a crane. Never attempt to operate a crane while under the influence of medication, narcotics, or alcohol. Any type of drug could impair physical, visual and mental reactions, and capabilities.

As operator of this crane, you are granted the authority to stop and refuse to lift loads until safety is assured.

OPERATIONAL AIDS

Operational aids are accessories that provide information to facilitate operation of a crane or that take control of particular functions without action of the operator when a limiting condition is sensed, as stated in the latest revision of the ASME B30.5, and ASME B30.8 standards. Examples of such devices include, but are not limited to, the following: anti-two-block device, rated capacity indicator, rated capacity limiter, boom angle or radius indicator, boom length indicator, crane level indicator, hoist drum rotation indicator, load indicator, and wind speed indicator.

Manitowoc remains committed to providing reliable products that enable users and operators to safely lift and position loads. Manitowoc has been an industry leader in the incorporation of operational aids into the design of its cranes. Federal law requires that cranes be properly maintained and kept in good working condition. The manuals that Manitowoc provides that are specific for each crane and the manufacturer's manuals for the operational aids shall be followed. If an operational aid should fail to work properly, the crane user or owner must assure that repair or recalibration is accomplished as soon as is reasonably possible. If immediate repair or recalibration of an operational aid is not possible and there are exceptional circumstances which justify continued short-term use of the crane when operational aids are inoperative or malfunctioning, the following requirements shall apply for continued use or shutdown of the crane:

- Steps shall be taken to schedule repairs and recalibration immediately. The operational aids shall be put back into service as soon as replacement parts, if required, are available and the repairs and recalibration can be carried out. Every reasonable effort must be made to expedite repairs and recalibration.
- When a *Load Indicator*, *Rated Capacity Indicator*, or *Rated Capacity Limiter* is inoperative or malfunctioning, the designated person responsible for supervising the lifting operations shall establish procedures for determining load weights and shall ascertain that the weight of the load does not exceed the crane ratings at the radius where the load is to be handled.
- When a *Boom Angle* or *Radius Indicator* is inoperative or malfunctioning, the radius or boom angle shall be determined by measurement.
- When an *Anti-Two-Blocking Device*, *Two-Blocking Damage Prevention Device* or *Two-Block Warning Device* is inoperative or malfunctioning, the designated person responsible for supervising the lifting operations shall establish procedures, such as assigning an additional signal person to furnish equivalent protection. This does not apply when lifting personnel in load-line supported personnel platforms. Personnel shall not be lifted when anti-two-block devices are not functioning properly.
- When a *Boom Length Indicator* is inoperative or malfunctioning, the designated person responsible for supervising the lifting operations shall establish the boom lengths at which the lift will be made by actual measurements or marking on the boom.
- When a *Level Indicator* is inoperative or malfunctioning, other means shall be used to level the crane.

Rated Capacity Limiter (RCL) Systems (If Equipped)

Your crane may be equipped with an RCL system which is intended to aid the operator. An RCL is a device that automatically monitors radius, load weight, and load rating and prevents movements of the crane, which would result in an overload condition.

Test daily for proper operation. Never interfere with the proper functioning of operational aids or warning devices.

Under **no condition** should it be relied upon to replace the use of *Load Charts* and operating instructions. Sole reliance upon these electronic aids in place of good operating practices can cause an accident.

Know the weight of all loads and always check the capacity of the crane as shown on the *Load Chart* before making any lifts.

NEVER exceed the rated capacity shown on the *Load Chart*. Always check the *Load Chart* to ensure the load to be lifted at the desired radius is within the rated capacity of the crane.

For detailed information concerning the operation and maintenance of the RCL system installed on the crane, see the RCL manufacturer's manual supplied with the crane. Manufacturers of rated capacity limiters may refer to them in their manuals as a load moment indicator (LMI), a hydraulic capacity alert system (HCAS), a safe load indicator (SLI), or an EKS5; Manitowoc refers to these systems as a rated capacity limiter (RCL) throughout its *Operator* and *Service Manuals*.

Reference Only

Anti-Two-Blocking Device

This crane should have a functional Anti-Two-Block and Control Lock-Out System. Test daily for proper operation.

Two-blocking occurs when the load block (hook block, headache ball, rigging, etc.) comes into physical contact with the boom (boom nose, sheaves, jib, etc.). Two-blocking can cause hoist rope (wire rope or synthetic rope), rigging, reeving, and other components to become highly stressed and overloaded in which case the hoist rope may fail allowing the load, block, etc. to free fall.

Two-blocking is more likely to occur when both the main and auxiliary hoist lines are reeved over the main boom nose and jib nose respectively. An operator, concentrating on the specific line being used, may telescope or lower the boom allowing the other hoist line attachment to contact the boom or jib nose, thus causing damage to the sheaves, or causing the hoist rope to fail, dropping the lifting device to the ground and possibly injuring personnel working below.

Caution must be used when lowering the boom, extending the boom or hoisting up. Let out load line(s) simultaneously to prevent two-blocking the boom tip(s) and the hook block, etc. The closer the load is carried to the boom nose the more important it becomes to simultaneously let out hoist rope as the boom is lowered. Keep load handling devices a minimum of 107 cm (42 in) below the boom nose at all times.

Two-blocking can be prevented. Operator awareness of the hazards of two-blocking is the most important factor in preventing this condition. An Anti-Two-Block System is intended to assist the operator in preventing dangerous two-block conditions. It is not a replacement for operator awareness and competence.

Never interfere with the proper functioning of operational aids or warning devices.

Working Area Limiter (If Equipped)

This crane may be equipped with a working area limiter as part of the RCL system, designated as either Work Area Definition System (WADS) or Working Range Limiter (WRL). You must read and understand the operator manual before operating the working area limiter system. Become familiar with all proper operating procedures and with the identification of symbol usage.

The working area limiter is intended to be used as an aid to the operator. It is not a substitute for safe crane operating practices, experience and good operator judgements.

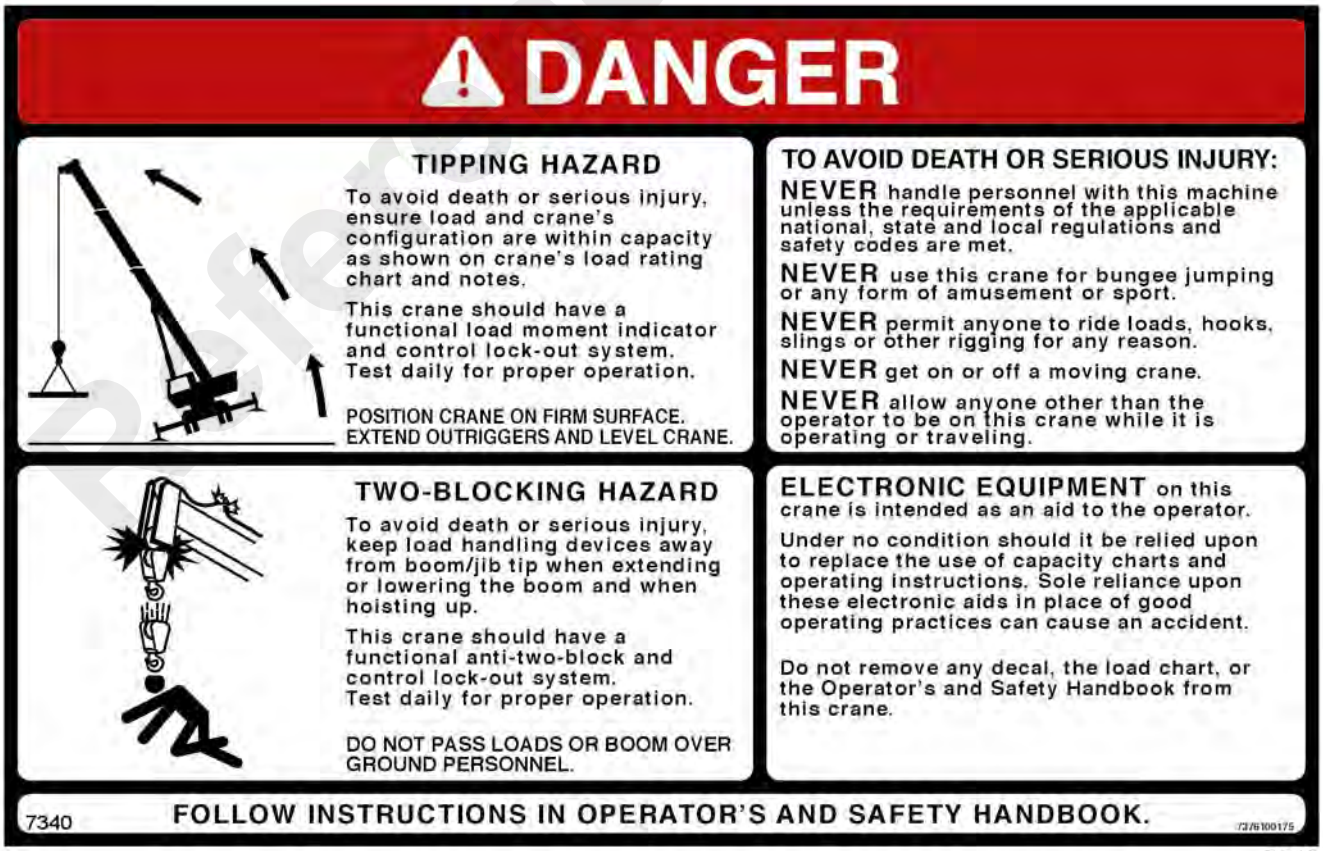

7340

Reference Only

CRANE STABILITY/STRUCTURAL STRENGTH

To avoid death or serious injury, ensure that the crane is on a firm surface with load and crane's configuration within capacity as shown on the crane's *Load Chart* and notes.

Ensure all pins and floats are properly installed and outrigger beams are properly extended before lifting on outriggers. On models equipped with outriggers that can be pinned at the mid-extend position (vertical stripe, if applicable), the outriggers must also be pinned when operating from the mid-extend position.

Use adequate cribbing under outrigger floats to distribute weight over a greater area. Check frequently for settling.

Read and follow the following safety decal for cranes with center front stabilizers.

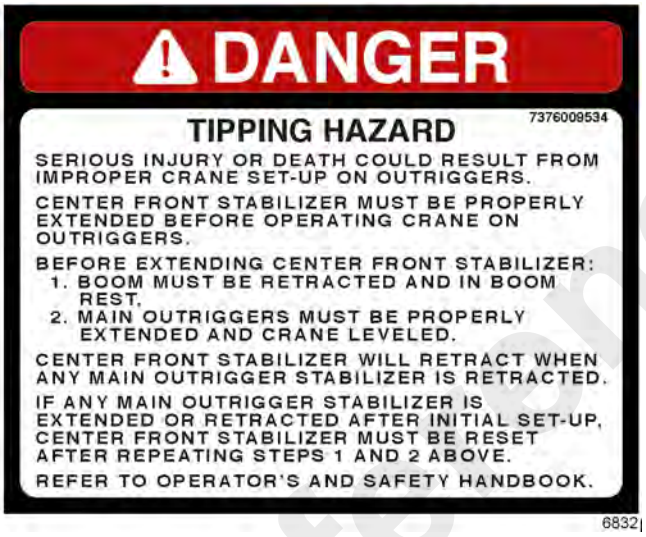

Carefully follow the procedures in this Operator Manual when extending or retracting the outriggers. Death or serious injury could result from improper crane setup on outriggers.

The operator must select the proper *Load Chart* and Rated Capacity Limiter (RCL) System program for the outrigger position selected.

Before swinging the superstructure over the side when the outriggers are retracted, check the *Load Chart* for backwards stability.

Long cantilever booms can create a tipping condition when in an extended and lowered position. Retract the boom proportionally with reference to the capacity of the applicable *Load Chart*.

Check crane stability before lifting loads. Ensure the outriggers (or tires if lifting on rubber) are firmly positioned on solid surfaces. Ensure the crane is level, brakes are set, and the load is properly rigged and attached to the hook. Check the *Load Chart* against the weight of the load. Lift the load slightly off the ground and recheck the stability before proceeding with the lift. Determine the weight of the load before you attempt the lift.

Unless lifting within On Rubber capacities, outrigger beams and jack cylinders (plus center front stabilizer, if equipped) must be properly extended and set to provide precise leveling of the crane. Tires must be clear of the ground before lifting on outriggers.

KEEP THE BOOM SHORT. Swinging loads with a long line can create an unstable condition and possible structural failure of the boom.

Load Charts

Load Charts represent the absolute maximum allowable loads, which are based on either tipping or structural limitations of the crane under specific conditions. Knowing the precise load radius, boom length, and boom angle should be a part of your routine planning and operation. Actual loads, including necessary allowances, should be kept below the capacity shown on the applicable *Load Chart*.

Load Chart capacities are based on freely suspended loads.

You must use the appropriate *Load Chart* when determining the capability of the crane in the configuration required to perform the lift.

Maximum lifting capacity is available at the shortest radius, minimum boom length, and highest boom angle.

Do not remove the *Load Charts* from the crane.

Work Site

Prior to any operation, you must inspect the **entire** work site, including ground conditions, where the crane will travel and

operate. Be sure that the surfaces will support a load greater than the crane's weight and maximum capacity.

Be aware of all conditions that could adversely effect the stability of the crane.

Be aware of the danger for people entering the working area. Do not allow unnecessary personnel in the vicinity of the crane while operating.

WIND FORCES

There are basic principles that must be followed while operating in windy conditions. This information has been provided to assist in determining safe operation in windy conditions.

Always use extreme caution when windy conditions exist. NEVER exceed the rated capacity shown on the *Load Chart*.

Always check the *Load Chart* to ensure the load to be lifted is within the rated capacity of the crane.

Wind can have a significant effect on loads that may be lifted by a crane. Wind forces act differently on a crane depending upon the direction from which the wind is blowing (e.g., wind on the rear of the boom can result in decreased forward stability, wind on the underside of the boom can result in decreased backward stability, wind on the side of the boom can result in structural damages, etc.)

Wind forces can exert extreme dynamic loads. Manitowoc recommends that a lift not be made if the wind can cause a loss of control in handling the load.

Wind forces can be determined by typical visible effects on the landscape.To assist you in determining prevailing wind conditions, refer to Table 2-1.

NOTE: The wind speed corresponding to the Beaufort scale in the table is mean wind speed at 10 m (33 ft) elevation over a period of 10 minutes.

Table 2-1 Beaufort Wind Scale

		Maximum Wind Speed			
Beaufort Number	**Description**	**m/s**	**km/h**	**mph**	**Visible Indicator Effects of wind as observed on land**
Zero (0)	Calm	0.3	1.1	0.7	Calm; smoke rises vertically
1	Light Air	1.5	5.4	3.4	Smoke drift indicates wind direction. Leaves and wind vanes are stationary.
2	Light Breeze	3.3	11.9	7.4	Wind felt on exposed skin. Leaves rustle. Wind vanes begin to move.
3	Gentle Breeze	5.4	19.4	12.1	Leaves and small twigs constantly moving. Light flags extended.
4	Moderate Breeze	7.9	28.4	17.7	Dust and loose paper raised. Small branches begin to move.
5	Fresh Breeze	10.7	38.5	23.9	Branches of a moderate size move. Small trees in leaf begin to sway.
6	Strong Breeze	13.8	49.7	30.9	Large branches in motion. Whistling heard in overhead wires. Umbrella use becomes difficult. Empty plastic bins tip over.
7	High Wind	17.1	61.6	38.3	Whole trees in motion. Effort needed to walk against the wind.
8	Gale	20.7	74.5	46.3	Some twigs broken from trees. Cars veer on road. Progress on foot is seriously impeded.
9	Strong Gale	24.4	87.8	54.6	Some branches break off trees, and some small trees blow over. Construction/temporary signs and barricades blow over.
10	Storm	28.4	102.2	63.5	Trees are broken off or uprooted, structural damage likely.

Reference Only

Wind Speeds

The maximum permissible wind speed referred to in the load charts is the 3-second wind gust speed measured at the boom tip height and is designated as ***V(z)***. This value is either recorded at boom tip or calculated based on mean wind speed recorded at crane operation site. For lift planning purposes only, the 3-second wind gust speed, ***V(z)***, may be calculated based on mean wind speed reported at http://www.windfinder.com "Super Forecast".

This 3-second wind gust is assumed to act on the entire crane and the load. The wind effect on the load can be conservatively estimated as:

a) If ***V(z)*** is ≤ 13.4 m/s (30 mph), then the **allowable** load is the published rated capacity from the Load Chart.

b) If ***V(z)*** is > 13.4 m/s (30 mph) and is ≤ 20.1 m/s (45 mph), the **allowable** load is the published rated capacity multiplied by the Capacity Reduction Factor from Table 2-4 (metric) or Table 2-6 (non-metric).

NOTE: This condition is limited to operation with the main boom on fully extended outriggers only.

c) If ***V(z)*** is > 20.1 m/s (45 mph), then lifting is NOT permitted. Cease lifting operations and lower and retract the boom.

In both cases **a**) and **b**) above, the lift may also be limited by the projected wind area of the load ***Ap*** and by the wind drag coefficient ***Cd***: This limit can be determined by comparing the **Actual** wind resistance area with the **Allowable** wind resistance area.

Refer to Figure 2-2 for a simplified calculation method to determine permissible wind speed.

Reference Only

Simplified Method to Determine Maximum Permissible Wind Speed

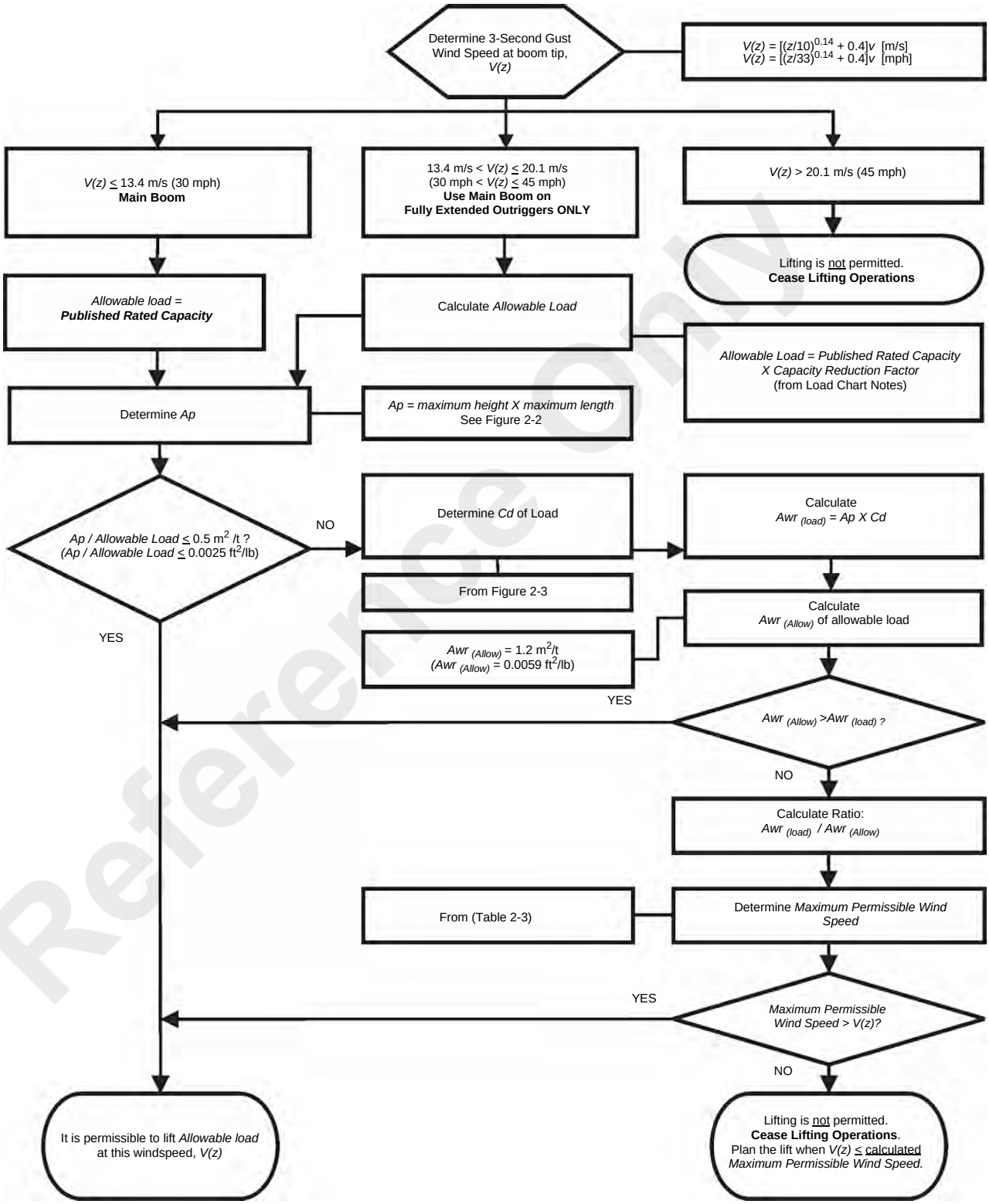

V(z) = 3 second gust wind speed at boom tip, m/s (mph)
Ap = Projected Wind Area of Load, m^2 (ft^2)

Awr (load) = Actual Wind Resistance Area for the Load, m^2(ft)
Awr (Allow) = Allowable Wind Resistance Area of the Load, m^2 (ft2
Cd = air drag coefficient of load

FIGURE 2-1

Reference Only

Determination of 3-second wind gust speed at boom tip height:

The following example illustrates how to calculate 3-second wind gust speed at boom tip height based on mean wind speed recorded by the device located at the crane operation site:

V(z) is the 3-second wind gust speed at boom tip height ***Z*** then:

Metric, with ***Z*** [m] and ***V*** [m/s]

$$V(z) = [(Z/10)^{0.14} + 0.4] \times V \qquad (2.1)$$

Non-metric, with ***Z*** [ft] and ***V*** [mph]

$$V(z) = [(Z/33)^{0.14} + 0.4] \times V \qquad (2.2)$$

where:

V [m/s] [mph] - Mean wind speed at 10 m (22 ft) elevation (upper limit of Beaufort scale)

Example: Suppose you want to lift the load with the maximum boom tip height of 30 m (100 ft) and the recorded mean wind speed by the device located at the crane operation site is 5.5 m/s (13 mph). This mean wind speed of 5.5 m/s (13 mph) corresponds to Beaufort number 4 (see Table 2-1). The maximum wind velocity according to the Beaufort scale of 4 is 7.9 m/s (17.7 mph).

The mean wind speed (upper limit of Beaufort number) at 10 m (33 ft) height, to be used for calculation is:

V = 7.9 m/s (17.7 mph)

Boom tip height for this lift is ***Z*** = 30 m (100 ft)

then:

Metric, with ***Z*** [m] and ***V*** [m/s]

$$V(z) = [(30/10)^{0.14} + 0.4] \times 7.9 = 12.4 \text{ m/s}$$

Non-metric, with ***Z*** [ft] and ***V*** [mph]

$$V(z) = [(100/33)^{0.14} + 0.4] \times 17.7 = 27.8 \text{ mph}$$

Since ***V(z)*** is ≤ 13.4 m/s (30 mph), the allowable loads are the published rated capacities from the Load Chart and can be lifted at this condition.

Size and Shape of the load:

These rated capacities are also based on the assumption that the Wind Resistance Area of load, $Awr_{(load)}$ is not more than 0.0012 square meters per kilogram (0.0059 sq.ft per pound of load. (See below Formulas 2.4 and 2.5.)

The load capacities shall be reduced to account for the larger wind resistance area of load and 3-second wind gust speed at boom tip height. Use tag lines when the wind gust speed is above 13.4 m/s (30 mph) to help control the movement of the load. **Manitowoc recommends that a lift not be made if the wind can cause a loss of control in handling the load.**

The lift may also be limited by the projected wind area of the load ***Ap*** and by the wind drag coefficient ***Cd***. This limit can be determined by comparing the actual wind resistance area of the load with the allowable wind resistance area.

$$Awr_{(load)} = Ap \times Cd \qquad (2.3)$$

where:

$Awr_{(load)}$ [m^2] [ft^2] . - Wind resistant area of the load

Ap [m^2] [ft^2] - projected wind area,

Cd - wind drag coefficient.

Ap is determined by using the calculation of maximum height x maximum length (see Figure 2-3).

For ***Cd***, refer to Table 2-2. If the ***Cd*** cannot be calculated or estimated, use a value of 2.4.

The allowable wind resistant area of the load $Awr_{(allow)}$ is equal to 0.0012 square meters per kilogram (0.0059 sq.ft per pound) of allowable load:

Metric, with $m_{(load)}$ [kg] - Mass of the allowable load

$$Awr_{(allow)} = 0.0012 \times m_{(load)} \qquad (2.4)$$

Non-metric, with $m_{(load)}$ [lb] - Mass of the allowable load

$$Awr_{(allow)} = 0.0059 \times m_{(load)} \qquad (2.5)$$

If $Awr_{(load)}$ is greater than $Awr_{(allow)}$, then lifting this load at this wind speed ***V(z)*** is NOT permitted.

Reference Only

Calculation of Projected Wind Area (Ap):

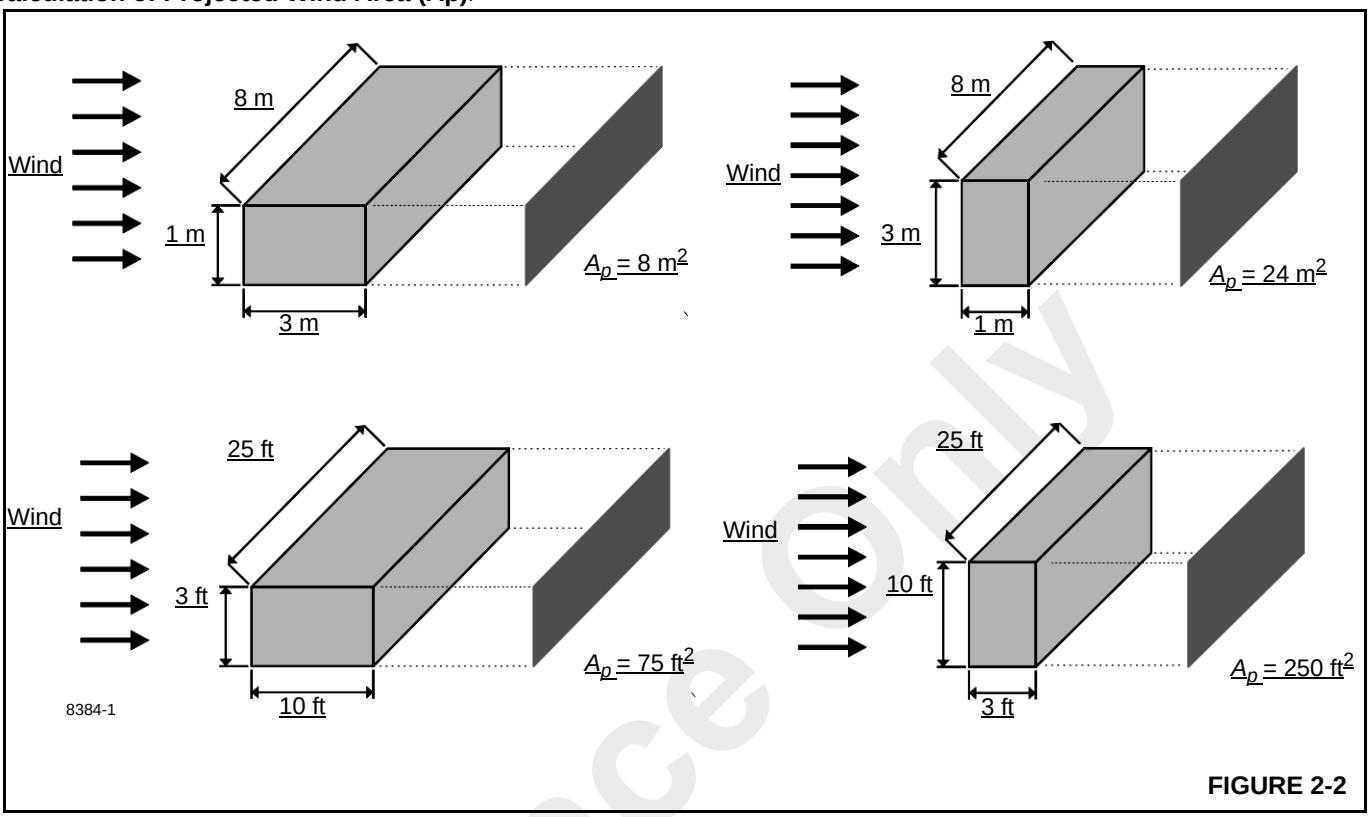

FIGURE 2-2

Determining Wind Drag Coefficient (Cd)

Table 2-2 shows the typical Shapes and corresponding Wind Drag Coefficient ***(Cd)*** values.

If the exact Wind Drag Coefficient of a shape is not known, use the maximum value of the shape's range (Table 2-2).

If the wind drag coefficient of the load cannot be estimated or determined, it shall be assumed that ***(Cd)*** = 2.4.

Reference Only

Table 2-2 Wind Drag Coefficient

Shape	*Cd*	
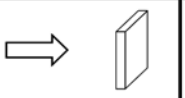	1.1 to 2.0	
	0.3 to 0.4	
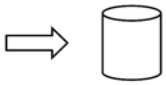	0.6 to 1.0	
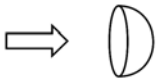	0.8 to 1.2	
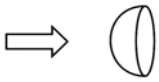	0.2 to 0.3	
	0.05 to 0.1	Turbine Blade or Complete Rotor
	Approximately 1.6	

8384-2

Maximum Permissible Wind Speed

If the wind resistant area of the load ***Awr***$_{(load)}$ is greater than the allowable wind resistant area ***Awr***$_{(allow)}$, the ratio can be used to determine a permissible wind speed ***V(z)*** for the load using Table 2-3.

Table 2-3 *Awr* Ratio and Permissible Wind Speed *V(z)* - *Non - metric*

Note: Permissible and rated wind speeds in this table are the 3-second gust wind speeds at boom tip height.					
Ratio:	1.2	1.4	1.6	1.8	2
	Maximum Permissible Wind Speed (mph)				
For Rated Capacity at 30 mph	27.4	25.4	23.7	22.4	21.2
For Allowable Capacity at 45 mph	41.1	38.0	35.6	33.5	31.8

Reference Only

Rated Load Chart Example - Metric

RATED LIFTING CAPACITIES IN KILOGRAMS
10.9 m - 33.5 m BOOM

ON OUTRIGGERS FULLY EXTENDED - 360°

Radius in Meters	#0001								
	Main Boom Length in Meters								
	10.9	12.2	15.2	**18.4	21.3	24.4	27.4	30.5	33.5
3	+60,000 (69.5)	40,950 (72)	40,950 (76)						
3.5	53,000 (66.5)	40,950 (69.5)	40,950 (74)	28,350 (78)					
4	47,450 (63.5)	40,950 (66.5)	40,950 (72)	28,350 (75.5)	*18,225 (78)				
4.5	42,875 (60.5)	40,950 (64)	40,950 (70)	28,350 (73.5)	18,225 (76)				
5	39,050 (57.5)	39,025 (61.5)	38,300 (67.5)	28,350 (72)	18,225 (75)	*18,225 (78)			
6	32,950 (50.5)	32,925 (55.5)	32,825 (63.5)	28,350 (68.5)	18,225 (72)	[illegible]	*18,225 (78)		
7	28,325 (42.5)	28,300 (49)	28,225 (59)	26,250 (65)	18,225 (69)	[illegible]	18,225 (74.5)	*16,725 (78)	*11,400 (78)
8	24,150 (32.5)	24,150 (42)	23,975 (54.5)	23,275 [illegible]	[illegible]	[illegible] (69.5)	16,575 (72)	15,250 (74.5)	11,400 (76)
9	20,600 (16.5)	20,550 (33.5)	20,375 (49.5)	[illegible]	18,2[illegible] (63)	16,575 (67)	15,050 (70)	13,875 (72.5)	11,400 (74.5)
10		17,200 (20.5)	[illegible]	[illegible] (54)	17,325 (60)	[illegible]	13,725 (67.5)	12,700 (70.5)	11,400 (72.5)
12			[illegible]	[illegible] (45.5)	12,575 (53.5)	[illegible]	11,600 (63)	10,725 (66.5)	10,050 (69)
14				9,000 (35)	9,360 [illegible]	9,730 (53.5)	[illegible] (58.5)	9,205 (62)	8,620 (65)
16				6,75[illegible] (19)	[illegible]	[illegible]	7,920 (53)	7,980 (57.5)	7,470 (61.5)
18					[illegible]	5,960 (39.5)	6,340 (47.5)	6,525 (53)	6,530 (57.5)
20						4,755 (30.5)	5,145 (41)	5,320 (48)	5,495 (53)
22						3,790 (16.5)	4,210 (33.5)	4,380 (42.5)	4,545 (48.5)
24							3,435 (23.5)	3,620 (36)	3,780 (43.5)
26								2,975 (28)	3,150 (37.5)
28								2,400 (16)	2,620 (31)
30									2,135 (22)
Minimum boom angle (°) for indicated length (no load)									0
Maximum boom length (m) at 0° boom angle (no load)									33.5

NOTE: ( ) Boom angles are in degrees.
#RCL operating code. Refer to RCL manual for operating instructions.
*This capacity is based on maximum boom angle.
+ 9 parts line required to lift this capacity (using aux. boom nose) when using wire rope with a minimum breaking strength of 36,287 kg. Refer to Operator's & Safety Handbook for reeving diagram.
NOTE: For allowable capacities while operating in 3-second wind gust speeds greater than 13.4 m/s and up to 20.1 m/s, refer to *Capacity Reduction Factors for wind speed (3-second gust speed) V(z) greater than 13.4m/s.*

Lifting Capacities at Zero Degree Boom Angle									
Boom Angle	Main Boom Length in Meters								
	10.9	12.2	15.2	**18.4	21.3	24.4	27.4	30.5	33.5
0°	13,775 (9.2)	11,675 (10.4)	8,145 (13.5)	5,930 (16.6)	4,565 (19.6)	3,535 (22.6)	2,860 (25.7)	2,220 (28.7)	1,770 (31.8)

NOTE: ( ) Reference radii in meters.
** Boom length is with inner-mid fully extended and outer-mid & fly fully retracted.

Ref: SAMPLE ONLY

8383-1

FIGURE 2-3

Table 2-4 Example-Capacity Reduction Factors for Wind Speed *V(z)* Greater than 13.4 m/s - Metric

(Only for lifting with main boom on fully extended outriggers, with or without stowed extension) For wind speed ***V(z)*** (3-second gust speed at boom tip height) ***V(z)*** > 13.4 m/s ≤ 20.1 m/s, the Reduced Capacity shall be calculated by multiplying the Published Rated Capacity by the following factors:									
	Main Boom Length in Meters								
Wind Speed *V(z)* > 13.4 m/s ≤ 20.1 m/s	10.9	12.2	15.2	18.4	21.3	24.4	27.4	30.5	33.5
Factor	0.9	0.9	0.8	0.8	0.8	0.8	0.8	0.7	0.6
Wind resistance area of load, ***Awr***$_{(load)}$ shall not exceed maximum allowable wind resistance area ***Awr***$_{(allow)}$. Maximum allowable wind resistance area, ***Awr***$_{(allow)}$ = 0.0012 x calculated reduced capacity in kg. Wind resistance area of load, ***Awr***$_{(load)}$ = projected wind area ***Ap*** x wind drag coefficient ***Cd*** for the load. For wind resistance Area of load, ***Awr***$_{(load)}$ > maximum allowable wind resistance area, ***Awr***$_{(allow)}$ refer to crane Operator Manual.									

Table 2-5 *Awr* Ratio and Permissible Wind Speed *V(z)* - *Metric*

Note: Permissible and rated wind speeds in this table are the 3-second gust wind speeds at boom tip height.					
Ratio:	1.2	1.4	1.6	1.8	2
	Maximum Permissible Wind Speed (m/s)				
For Rated Capacity at 13.4 m/s	12.2	11.4	10.6	10.0	9.5
For Allowable Capacity at 20.1 m/s	18.3	17.0	15.9	15.0	14.2

Example and Sample Calculations (metric)

The following example illustrates how to calculate allowable load while operating in wind speed (3-second wind gust speed) above 13.4 m/s (30 mph) and maximum permissible wind speeds with various combinations of lifted load and wind resistance area.

NOTE: Permissible and calculated wind speeds in this example are the **3-second wind gust speeds at boom tip height *V(z)***.

Example 1: Crane Configuration:

- boom length = 27.4 m,
- load radius = 9 m,
- wind speed is measured at ***V(z)*** ≤ 20.1 m/s.

From the ***Rated Load Chart Example - Metric*** (Figure 2-3), at maximum permissible wind speed, ***V(z)*** = 13.4 m/s, the rated lifting capacity ***m***$_{(allow)}$ for this configuration is 15,050 kg.

The maximum allowable wind resistance area of load is

$$Awr_{(allow)} = 0.0012 \times m_{(load)} \quad (2.4)$$

$$Awr_{(allow)} = 0.0012 \times 15{,}050 = 18.06 \text{ m}^2$$

Lifting Limits at wind speed V(z) ≤ 13.4 m/s at this configuration:

- Maximum load 15,050 kg
- Maximum wind resistance area of load 18.06 m^2

For the allowable wind speed > 13.4 m/s and ≤ 20.1 m/s, reduce the allowable load. Per Table 2-4, the Factor for main boom length of 27.4 m is 0.8, the allowable load is:

$$m_{(allow)} = 0.8 \times 15{,}050 = 12{,}040 \text{ kg}$$

This reduced capacity load has an allowable wind resistance area of:

$$Awr_{(allow)} = 0.0012 \times 12{,}040 = 14.45 \text{ m}^2$$

***Lifting Limits at wind speed V(z) > 13.4 m/s* and ≤ 20.1 m/s,** at this configuration:

- Maximum load 12,040 kg
- Maximum wind resistance area of load 14.45 m^2

SAMPLE Reference Only

At wind speeds greater than 13.4 m/s, it is not permissible to lift a load greater than 12,040 kg, even if the wind resistance area of the load is less than 14.45 m^2.

Refer to the information from the above crane configuration, examine several load conditions.

Load example 1.1:

With known Wind Drag Coefficient of the load ***Cd***, and

- load to be lifted of 11,200 kg,
- Projected Wind Area ***Ap*** = 9.20 m^2,
- Wind Drag Coefficient ***Cd*** = 1.5

wind resistance area of load can be estimated as

$Awr_{(load)} = Ap \times Cd = 9.2 \times 1.5 = 13.8\ m^2$

Refer to the above ***Lifting Limits at wind speed V(z) > 13.4 m/s and ≤ to 20.1 m/s***. Comparing the load and wind resistant area to the allowable:

- Is the load to be lifted less than allowable load?
  11,200 kg ≤ 12,040 kg YES
- Is $Awr_{(load)}$ less than $Awr_{(allow)}$?
  13.8 m^2 ≤ 14.45 m^2 YES

Conclusion: This load is permissible to lift in wind speed up to 20.1 m/s.

Load example 1.2:

With unknown Wind Drag Coefficient of the load ***Cd***,

- Load to be lifted of 10,000 kg,
- Projected Wind Area ***Ap*** = 5.45 m^2,
- Wind Drag Coefficient ***Cd*** = unknown

NOTE: If exact Wind Drag Coefficient is not known, it shall be assumed as 2.4.

- the wind resistance area of load can be estimated as
  $Awr_{(load)} = Ap \times Cd = 5.45 \times 2.4 = 13.08\ m^2$

Refer to the above ***Lifting Limits at V(z) > 13.4 m/s and ≤ 20.1 m/s***. Comparing the load and wind resistant area to the allowable:

- Is the load to be lifted less than allowable load?
  10,000 kg ≤ 12,040 kg YES
- Is $Awr_{(load)}$ less than $Awr_{(allow)}$?
  13.08 m^2 ≤ 14.45 m^2 YES

Conclusion: This load is permissible to lift in wind speed up to 20.1 m/s.

Load example 1.3a:

With large wind resistance area of the load $Awr_{(load)}$,

- Load to be lifted of 14,000 kg,
- Projected Wind Area ***Ap*** = 21.85 m^2,
- Wind Drag Coefficient ***Cd*** = 1.2

the wind resistance area of load can be estimated as:

$Awr_{(load)} = Ap \times Cd = 21.85 \times 1.2 = 26.22\ m^2$

Refer to the above ***Lifting Limits at wind speed V(z) > 13.4 m/s and ≤ 20.1 m/s***. Comparing the load to the allowable:

- Is the load to be lifted less than allowable load?
  14,000 kg ≤ 12,040 kg NO

Conclusion: This load is NOT permissible to lift in wind speed up to 20.1 m/s.

Refer to the above ***Lifting Limits at wind speed V(z) < 3.4 m/s***. Comparing the load to the allowable:

- Is the load to be lifted less than allowable load?
  14,000 kg ≤ 15,050 kg YES

The maximum permissible wind speed for this load is 13.4 m/s, depending on the wind resistance area of the load.

- Is $Awr_{(load)}$ less than $Awr_{(allow)}$?
  26.22 m^2 ≤ 18.06 m^2 NO

Conclusion: This load is NOT permissible to lift in wind speed at 13.4 m/s, but is permitted to lift at a reduced wind speed calculated as follows:

Ratio $\frac{Awr_{(load)}}{Awr_{(allow)}} = \frac{26.22}{18.06} = 1.45$

From Table 2-5, the maximum permissible wind speed at ratio of 1.45 (rounded to next higher table value of 1.6) is 10.6 m/s.

Conclusion: This load is permissible to lift in wind speed up to 10.6 m/s only.

Load example 1.3b:

With large wind resistance area of the load $Awr_{(load)}$,

- Load to be lifted of 8,000 kg,
- Projected Wind Area ***Ap*** = 15.25 m^2,
- Wind Drag Coefficient ***Cd*** = 1.3

the wind resistance area of load can be estimated as

$Awr_{(load)} = Ap \times Cd = 15.25 \times 1.3 = 19.83\ m^2$

Refer to the above ***Lifting Limits at wind speed V(z) > 13.4 m/s and ≤ 20.1 m/s***. Comparing the load and wind resistant area to the allowable:

Reference Only

- Is the load to be lifted less than allowable load?
  8,000 kg ≤ 12,040 kg YES
- Is ***Awr***$_{(load)}$ less than ***Awr***$_{(allow)}$?
  19.83 m^2 ≤ 14.45 m^2 NO

Conclusion: This load is NOT permissible to lift in wind speed up to 20.1 m/s, but permitted to lift at a reduced wind speed calculated as follows:

Ratio $\frac{Awr_{(load)}}{Awr_{(allow)}} = \frac{19.83}{14.45} = 1.37$

From Table 2-5, the maximum permissible wind speed at ratio of 1.37 (rounded to next higher table value of 1.4) is 17.0 m/s.

Conclusion: This load is permissible to lift in wind speed up to 17.0 m/s only.

Reference Only

Rated Load Chart Example - Non-metric

RATED LIFTING CAPACITIES IN POUNDS
36 FT. - 110 FT. BOOM

ON OUTRIGGERS FULLY EXTENDED - 360°

Radius in Feet	#0001								
	Main Boom Length in Feet								
	36	40	50	**60	70	80	90	100	110
10	130,000 (69.5)	90,300 (71.5)	90,300 (75.5)	*62,500 (78)					
12	112,500 (65.5)	90,300 (68.5)	90,300 (73)	62,500 (76.5)	*40,200 (78)				
15	93,250 (60)	90,300 (63.5)	90,250 (69.5)	62,500 (73.5)	40,200 (76)	*40,200 (78)			
20	71,550 (49.5)	71,500 (55)	71,300 (63)	62,500 (68)	40,200 (71.5)	40,200 (74.5)	40,200 (78)	*36,900 (78)	
25	56,650 (36.5)	56,600 (45)	56,350 (56)	53,650 (63)	40,200 (67)	40,200 (70.5)	37,950 (73)	34,900 (75)	*25,150 (78)
30	43,500 (11.5)	44,300 (32)	43,950 (48.5)	43,650 (57.5)	40,200 (62.5)	[illegible]	32,750 (69.5)	30,200 (72)	25,150 (74)
35			33,550 (40)	33,700 (51.5)	34,700 (58)	[illegible]	[illegible] (66)	26,400 (69)	24,700 (71.5)
40			25,800 (28)	26,150 (44.5)	[illegible]	[illegible]	25,200 (62.5)	23,300 (66)	21,800 (68.5)
45				[illegible]	[illegible] (47)	22,300 (54)	22,400 (59)	20,700 (62.5)	19,400 (65.5)
50				[illegible]	[illegible] (41)	18,25[illegible] (49.5)	19,100 (55)	18,550 (59.5)	17,350 (62.5)
55					14,300 (33.5)	[illegible] (44)	16,000 [illegible]	16,400 (56)	15,600 (60)
60					[illegible]	12,700 [illegible]	13,550 (46.5)	13,950 (52.5)	14,100 (56.5)
65						[illegible] (31.5)	11,550 (41.5)	11,950 (48.5)	12,300 (53.5)
70						9,010 (22.5)	9,920 (36)	10,250 (44)	10,650 (50)
75							8,510 (29.5)	8,890 (39.5)	9,250 (46)
80							7,260 (21)	7,690 (34.5)	8,050 (42.5)
85								6,620 (28.5)	7,010 (38)
90								5,630 (20)	6,100 (33)
95									5,240 (27)
100									4,480 (19.5)
Minimum boom angle (°) for indicated length (no load)									0
Maximum boom length (ft.) at 0° boom angle (no load)									110

NOTE: ( ) Boom angles are in degrees.
#RCL operating code. Refer to RCL manual for operating instructions.
*This capacity is based on maximum boom angle.
NOTE: For allowable capacities while operating in 3-second wind gust speeds greater than 30 mph and up to 45 mph, refer to *Capacity Reduction Factors for wind speed (3-second gust speed) V(z) greater than 30 mph.*

Lifting Capacities at Zero Degree Boom Angle									
Boom Angle	Main Boom Length in Feet								
	36	40	50	**60	70	80	90	100	110
0°	30,350 (30.1)	25,700 (34.2)	17,950 (44.2)	13,050 (54.6)	10,050 (64.2)	7,790 (74.2)	6,300 (84.2)	4,900 (94.2)	3,900 (104.2)

NOTE: ( ) Reference radii in feet.
** Boom length is with inner-mid fully extended and outer-mid & fly fully retracted.

8382-1

FIGURE 2-4

Reference SAMPLE ONLY

Table 2-6 Example-Capacity Reduction Factors for Wind Speed *V(z)* Greater than 30 mph - Non-metric

(Only for lifting with main boom on fully extended outriggers, with or without stowed extension)

For wind speed ***Vz*** (3-second gust speed at boom tip height) is greater > 30> mph ≤ 45 mph, the Reduced Capacity shall be calculated by multiplying the Published Rated Capacity by the following factors:

	Main Boom Length in Feet								
Wind Speed *Vz*< 30 mph ≤ 45 mph	36	40	50	60	70	80	90	100	110
Factor	0.9	0.9	0.8	0.8	0.8	0.8	0.8	0.7	0.5

Wind resistance area of load, ***Awr***$_{(load)}$, shall not exceed maximum allowable wind resistance area ***Awr***$_{(allow)}$.

Maximum allowable wind resistance area in [ft^2], ***Awr*** $_{(allow)}$ = 0.0059 x calculated reduced capacity in lb.

Wind resistance area of load, ***Awr***$_{(load)}$ = projected wind area ***Ap*** x wind drag coefficient ***Cd*** for the load.

For wind resistance area of load, ***Awr*** $_{(load)}$ > maximum allowable wind resistance, **Awr** $_{(allow)}$, refer to crane Operator Manual.

Table 2-7 *Awr* Ratio and Permissible Wind Speed *V(z)* - *Non-Metric*

Note: Permissible and rated wind speeds in this table are the 3-second gust wind speeds at boom tip height.

Ratio:	1.2	1.4	1.6	1.8	2
	Maximum Permissible Wind Speed (mph)				
For Rated Capacity@ 30 mph	27.4 mph	25.4 mph	23.7 mph	22.4 mph	21.2 mph
For Allowable Capacity@ 45 mph	41.1 mph	38.0 mph	35.6 mph	33.5 mph	31.8 mph

Example and Sample Calculations (Non-metric)

The following example illustrates how to calculate allowable load while operating in wind speed (3-second wind gust speed) above 13.4 m/s (30 mph) and maximum permissible wind speeds with various combinations of lifted load and wind resistance area.

NOTE: Permissible and calculated wind speeds in this example are the **3-second wind gust speeds at boom tip height *V(z)***.

Example 2:

A crane is configured with:

- boom length = 90 ft,
- load radius = 40 ft, and
- wind speed is measured at ***V(z)*** ≤ 45 mph.

The ***Rated Load Chart Example - Non-metric*** (Figure 2-4), at maximum permissible wind speed, ***V(z)*** = 30 mph, the rated lifting capacity ***m***$_{(allow)}$ for this configuration is 25,200 lb.

The maximum allowable wind resistance area of load is:

$$Awr_{(allow)} = 0.0059 \times m_{(load)} \quad (2.5)$$

$$Awr_{(allow)} = 0.0059 \times 25{,}200 = 149 \text{ ft}^2$$

Lifting Limits at wind speed V(z) < 30 mph at this configuration:

- Maximum load 25,200 lb
- Maximum wind resistance area of load 149 ft^2

For the allowable wind speed > 30 mph and ≤ 45 mph, reduce the allowable load. Table 2-6, the Factor for a main boom length of 90 ft is 0.8, thus the allowable load is:

$$m_{(allow)} = 0.8 \times 25{,}200 = 20{,}160 \text{ lb}$$

This reduced capacity load has an allowable wind resistance area of:

$$Awr_{(allow)} = 0.0059 \times 20{,}160 = 119 \text{ ft}^2$$

***Lifting Limits at wind speed V(z)* > 30 mph and ≤ 45 mph** at this configuration:

- Maximum load 20,160 lb
- Maximum wind resistance area of load 119 ft^2

SAMPLE Reference Only

Example, wind speeds greater than 13.4 m/s is NOT permissible to lift a load greater than 20,160 lb, even if the wind resistance area of the load is less than 119 ft^2.

Refer to the above crane configuration for the following load conditions:

Load example 2.1:

With known Wind Drag Coefficient of the load ***Cd***,

- load to be lifted of 19,500 lb,
- Projected Wind Area ***Ap*** = 70 ft^2,
- Wind Drag Coefficient ***Cd*** = 1.5

then the wind resistance area of load can be estimated as

$Awr_{(load)}$ = ***Ap*** x ***Cd*** = 70 x 1.5 = 105 ft^2

Refer to the above ***Lifting Limits at wind speed V(z) > 30 mph and ≤ 45 mph***. Comparing the load and wind resistant area to the allowable:

- Is the load to be lifted less than allowable load?
  19,500 lb **≤** 20,160 lb YES
- Is $Awr_{(load)}$ less than $Awr_{(allow)}$?
  105 ft^2 ≤ 119 ft^2 YES

Conclusion: This load is permissible to lift in wind speed up to 45 mph.

Load example 2.2:

With unknown Wind Drag Coefficient of the load ***Cd***,

- Load to be lifted of 18,000 lb,
- Projected Wind Area ***Ap*** = 45 ft^2,
- Wind Drag Coefficient ***Cd*** = unknown

NOTE: If exact Wind Drag Coefficient is not known, it shall be assumed as 2.4.

the wind resistance area of load can be estimated as

$Awr_{(load)}$ = ***Ap*** x ***Cd*** = 45 x 2.4 = 108 ft^2

Refer to the above ***Lifting Limits at wind speed V(z) > 30 mph and ≤ 45 mph***. Comparing the load and wind resistant area to the allowable:

- Is the load to be lifted less than allowable load?
  18,000 lb **≤** 20,160 lb YES
- Is $Awr_{(load)}$ less than $Awr_{(allow)}$?
  108 ft^2 ≤ 119 ft^2 YES

Conclusion: This load is permissible to lift in wind speed up to 45 mph.

Load example 2.3a:

With large wind resistance area of the load $Awr_{(load)}$,

- Load to be lifted of 22,000 lb,
- Projected Wind Area ***Ap*** = 180 ft^2,
- Wind Drag Coefficient ***Cd*** = 1.2

the wind resistance area of load can be estimated as:

$Awr_{(load)}$ = ***Ap*** x ***Cd*** = 180 x 1.2 = 216 ft^2

Refer to the above ***Lifting Limits at wind speed V(z) > 30 mph and ≤ 45 mph***. Comparing the load to the allowable:

- Is the load to be lifted less than allowable load?
  22,000 lb ≤ 20,160 lb NO

Conclusion: This load is NOT permissible to lift in wind speed up to 45 mph.

Refer to the above ***Lifting Limits at wind speed V(z) up to 30 mph***. Comparing the load to the allowable:

Is the load to be lifted less than allowable load?
22,000 lb **≤** 25,200 lb . . . . . YES

The permissible wind speed for this load is 30 mph, depending on the wind resistance area of the load.

- Is $Awr_{(load)}$ less than $Awr_{(allow)}$,?
  216 ft^2 ≤ 149 ft^2 . . . . . NO

Conclusion: This load is NOT permissible to lift in wind speed at 30 mph, but permitted to lift at a reduced wind speed calculated as follows:

$$\text{Ratio } \frac{Awr_{(load)}}{Awr_{(allow)}} = \frac{216}{149} = 1.45$$

From Table 2-7, the maximum permissible wind speed at ratio of 1.45 (rounded to next higher table value of 1.6) is 23.7 mph.

Conclusion: This load is permissible to lift in wind speed up to 23.7 mph only.

Load example 2.3b:

With large wind resistance area of the load $Awr_{(load)}$,

- Load to be lifted of 12,000 lb,
- Projected Wind Area ***Ap*** = 125 ft^2,
- Wind Drag Coefficient ***Cd*** = 1.3

the wind resistance area of load can be estimated as:

$Awr_{(load)}$ = ***Ap*** x ***Cd*** = 125 x 1.3 = 162 ft^2

Refer to the above ***Lifting Limits at wind speed V(z) > 30 mph and ≤ 45 mph***. Comparing the load and wind resistant area to the allowable:

- Is the load to be lifted less than allowable load?
  12,000 lb ≤ 20,160 lb YES
- Is $Awr_{(load)}$ less than $Awr_{(allow)}$,?
  162 ft^2 ≤ 119 ft^2 NO

Reference Only

Conclusion: This load is NOT permissible to lift in wind speed up to 45 mph, but permitted to lift at a reduced wind speed calculated as follows:

$$\text{Ratio } \frac{Awr_{(load)}}{Awr_{(allow)}} = \frac{162}{119} = 1.37$$

From Table Table 2-7, the maximum permissible wind speed at ratio of 1.37 (rounded to next higher table value of 1.4) is 38.0 mph.

Conclusion: This load is permissible to lift in wind speed up to 38.0 mph only.

Lifting Operations

Before lifting, position the crane on a firm surface, properly extend and set the outriggers, and level the crane. Depending on the nature of the supporting surface, adequate cribbing may be required to obtain a larger bearing surface.

The crane is equipped with a bubble level that should be used to determine whether the crane is level. The load line can also be used to estimate the levelness of the crane by checking to be sure it is in-line with the center of the boom at all points on the swing circle.

If the jib, or auxiliary boom nose is to be used, ensure the electrical cable and the weight for the Anti-Two-Block Switch are properly installed and the Rated Capacity Limiter (RCL) is programmed for the crane configuration. Refer to the RCL operator manual supplied with the crane.

Verify the crane's capacity by checking the *Load Chart* against the weight of the load. Then, lift the load slightly at first to ensure stability before proceeding with the lift.

Be sure the load is properly rigged and attached. Always determine the weight of the load before you attempt to lift it and remember that all rigging (slings, etc.) and lifting devices (hook block, jib, etc.) must be considered part of the load.

Measure the load radius before making a lift and stay within approved lifting areas based on the range diagrams and working area diagrams on the crane's *Load Chart*.

Always keep the load as near to the crane and as close to the ground as possible.

Do not overload the crane by exceeding the capacities shown on the appropriate *Load Chart*. Death or serious injury could result from the crane tipping over or failing structurally from overload.

The crane can tip over or fail structurally if:

- The load and crane's configuration is not within the capacity as shown on the applicable *Load Chart* and notes.
- The ground is soft and/or the surface conditions are poor.
- Outriggers are not properly extended and set. On models equipped with outriggers that can be pinned at the mid-extend position, the outriggers must also be pinned when operating from the mid-extend position.
- Cribbing under the outrigger pads is inadequate.
- The crane is improperly operated.

Do not rely on the crane's tipping to determine your lifting capacity.

Be sure the hoist line is vertical before lifting. Do not subject the crane to side loading. A side load can tip the crane or cause it to fail structurally.

Load Chart capacities are based on freely suspended loads. Do not pull posts, pilings, or submerged articles. Be sure the load is not frozen or otherwise attached to the ground before lifting.

If you should encounter a tipping condition, immediately lower the load with the hoist line and retract or elevate the boom to decrease the load radius. Never lower or extend the boom; this will aggravate the condition.

Use tag lines whenever possible to help control the movement of the load.

When lifting loads, the crane will lean toward the boom and the load will swing out, increasing the load radius. Ensure the crane's capacity is not exceeded when this occurs.

Do not strike any obstruction with the boom. If the boom should accidentally contact an object, stop immediately. Inspect the boom. Remove the crane from service if the boom is damaged.

Never push or pull with the crane boom.

Avoid sudden starts and stops when moving the load. The inertia and an increased load radius could tip the crane over or cause it to fail structurally.

Using only one hoist at a time when lifting loads is recommended. See "Tilt-Up Panel Lifting" on page 2-21 for additional lifting instructions.

Always use enough parts-of-line to accommodate the load to be lifted. Lifting with too few parts-of-line can result in failure of the hoist rope.

Counterweight

On cranes equipped with removable counterweights, ensure the appropriate counterweight sections are properly installed for the lift being considered.

Do not add material to the counterweight to increase capacity. United States Federal law prohibits modification or additions which affect the capacity or safe operation of the equipment without the manufacturer's written approval. [29CFR 1926.1434]

Reference Only

Outrigger Lift Off

Regarding "lifting" of an outrigger pad during craning activities, be advised that the rated loads for these cranes, as indicated on the crane's *Load Chart*, do not exceed 85% of the tipping load on outriggers as determined by SAE J765 OCT90 "Cranes Stability Test Code." An outrigger pad may lift off the ground during operation of the crane within the capacity limits of the *Load Chart*, yet the crane will not have reached instability. The "balance point" for stability testing according to SAE and Manitowoc criteria is a condition of loading wherein the load moment acting to overturn the crane is equal to the maximum moment of the crane available to resist overturning. This balance point or point of instability for a crane does not depend on "lifting" of an outrigger but rather on comparison of the "opposing" load moments.

The occurrence of an outrigger lifting from the ground is often attributed to the natural flex in the crane's frame. This may happen when lifting a load in certain configurations within the capacity limits of the *Load Chart* and is not necessarily an indication of an unstable condition.

Provided the crane is properly set up, the crane is in good working condition, that all operator's aids are properly programmed, that the qualified crane operator adheres to the instructions found in the applicable *Load Chart*, *Operator Manual* and decals on the crane, the crane should not be unstable.

Multiple Crane Lifts

Multiple crane lifts are not recommended.

Any lift that requires more than one crane must be precisely planned and coordinated by a designated person. If it is necessary to perform a multi-crane lift, the operator shall be responsible for assuring that the following minimum safety precautions are taken:

- Secure the services of a designated person to direct the operation.
- Use one qualified signal person.
- Coordinate lifting plans with the operators, designated person, and signal person prior to beginning the lift.
- Maintain communication between all parties throughout the entire operation. If possible, provide approved radio equipment for voice communication between all parties engaged in the lift.
- Use outriggers on cranes so equipped.
- Calculate the amount of weight to be lifted by each crane and attach slings at the correct points for proper weight distribution.
- Ensure the load lines are directly over the attach points to avoid side loading and transfer of loading from one crane to the other.
- Do not travel. Lift only from a stationary position.

Tilt-Up Panel Lifting

Requirements and recommendations regarding operation and use of Grove Cranes are stated on decals and in the Operator and Safety Handbook and other manuals provided with each specific model machine. Using the subject crane to perform tilt-up panel lifting with two hoist lines poses new and different hazards than does normal lifting use.

Therefore, the following additional precautions must be taken if it is necessary for the crane to be used to perform tilt-up panel lifting using a crane equipped with two hoists:

- The crane must be set up and operated in accordance with Grove's instructions in the Operator and Safety Handbook, Load Capacity Chart, and decals affixed to the crane.
- The wire rope from the main hoist shall be reeved over the main boom nose reeved for two parts of line.
- The wire rope from the auxiliary hoist shall be reeved over the auxiliary boom nose reeved for one part of line.
- The load shall be connected with the main hoist line connected to the end closest to crane and the auxiliary hoist line connected to the end farthest from the crane.
- The anti-two block system shall be installed and inspected to confirm that it is active to monitor both hoist lines.
- The RCL hoist selection shall be set to main hoist and two parts offline.
- The wire rope and sheaves shall be inspected prior to and following the lifting operations for chaffing or scrubbing.
- The total gross load shall not exceed 80% of the standard load chart. The operator shall be responsible to control this as the RCL does not have a feature to set reduced lifting limits.
- The auxiliary hoist line shall be considered part of the deducts to determine net allowable load.
- The panel shall be lifted so that the hoist lines are in line with the crane.
- The load shall be controlled to prevent rotation of the load and to ensure the load stays in line with the boom.
- The load must be balanced with the auxiliary: load line not taking more than half the load at any time during the lift. The RCL will not be providing coverage for the line pull of the auxiliary hoist line.

Reference Only

- The effect of wind loads on the crane and panel shall be taken into consideration. Operations shall be halted if the wind can cause a loss of control in handling the load.
- The main hoist line shall be used to raise the panel into the vertical position.

Ensure that all personnel working on and around the crane are properly trained and thoroughly familiar with operational functions of the crane and safe operating and work practices. Personnel should be thoroughly familiar with regulations and standards governing cranes and their operation. Work practices may vary slightly between government regulations, industry standards, local and job-site rules and employer policies so a thorough knowledge of and compliance with all relevant work rules is necessary.

PILE DRIVING AND EXTRACTING

Pile driving and extracting are applications approved by Manitowoc, provided all equipment is operated within factory guidelines. The following operating requirements must be used during pile driving and extracting with a Manitowoc mobile hydraulic crane:

Pile driving and pile extraction using a mobile crane introduces many variable and unknown factors that must be considered when using a crane for this application. Because of these factors, discretion must be exercised when pile driving or pile extraction is being considered.

It is not the intention of Manitowoc to recommend specific types or makes of pile driving and pile extraction equipment, but rather to advise of the operational requirements to help avoid the detrimental effects that pile driving and pile extraction can have on the crane.

In addition to the operating requirements that are detailed in the operating manuals and on the load capacity chart, pile driving and extracting operations are approved by Manitowoc, provided all guidelines outlined below are followed:

- All pile driving and extracting operations shall be restricted to fully extended outriggers with all tires clear of the ground.
- The combined weight of the driver or extractor, piling, leads, attachments, etc., shall not exceed 80% of the published load chart values for on-outriggers operation.
- The pile driver or pile extractor and attachments shall be kept clear of the boom nose at all times.
- The pile driver and piling shall be suspended from a hoist cable with sufficient line speed to meet or exceed the rate of descent of the driver and piling to preclude impact loading or vibration from being induced into the boom and crane structure.
- Pile driving or extracting shall be restricted to over the main boom only and shall not be permitted over a jib.
- Pile extraction using only the crane's hoist line is unsafe and not permitted since load values cannot be accurately determined. Only pile extraction devices that do not transmit vibration or shock loading into the crane are permitted. All possible precautionary measures shall be taken to prevent shock loads or vibration from being imposed on crane components, either directly through the hoist cable or indirectly from ground borne vibration.
- The load lines shall be kept vertical at all times during pile driving and pile extraction operations.
- The operator and other personnel associated with the pile driving and pile extraction operation shall have read and understood all safety standards applicable to crane operations as well as being thoroughly trained in the safe operation of pile driving and extracting equipment.

Crane Equipment

- Hoists shall be equipped with a cable follower to aid in proper spooling of cable.
- All cable retainer pins and cable guides/retainers shall be in place.
- All jibs must be removed from the machine before pile driving or extraction begins.
- All hoist hooks shall be equipped with a positive locking latch.

Crane Inspection

- In addition to the crane's frequent and periodic inspections, dated daily records shall be maintained showing inspections were performed on the crane during the time it was used for pile driving or extraction.
- All anti-two block warning devices and RCL systems shall be inspected daily and verified to be functional.
- All areas of the crane subject to fatigue shall be inspected monthly, and before the crane is to return to lifting service.
- The boom shall be inspected daily to ensure all wear pads remain in place. Cranes which utilize pinned boom sections shall be inspected daily to ensure the pinning mechanism operates properly and to check for undue wear at the pins and pinning plates. The hoist cable shall be inspected daily to ensure no chafing or wear is occurring.

Reference Only

ELECTROCUTION HAZARD

Thoroughly read, understand, and abide by all applicable federal, state, and local regulations regarding operation of cranes near electric power lines or equipment.

United States federal law prohibits the use of cranes closer than 6 m (20 ft) to power sources up to 350 kV and greater distances for higher voltages unless the line's voltage is known [29CFR1910.180 and 29CFR1926, subpart CC].

To avoid death or serious injury, Manitowoc recommends that all parts of crane, boom, and load be kept at least 6 m (20 ft) away from all electrical power lines and equipment less than 350 kV.

DANGER

Electrocution Hazard!

Manitowoc cranes are not equipped with all features required to operate within OSHA 29CFR1926.1408, Power Line Safety, Table A clearances when the power lines are energized.

If operation within 3 m (10 ft) of any power lines cannot be avoided, the power utility **must** be notified and the power lines **must** be de-energized and grounded **before** performing any work.

If contact is ever accidentally made with a power line and any part of this crane, its rigging or load, **never** touch the crane or even approach or come near the crane.

Electrocution **can occur** even without direct contact with the crane.

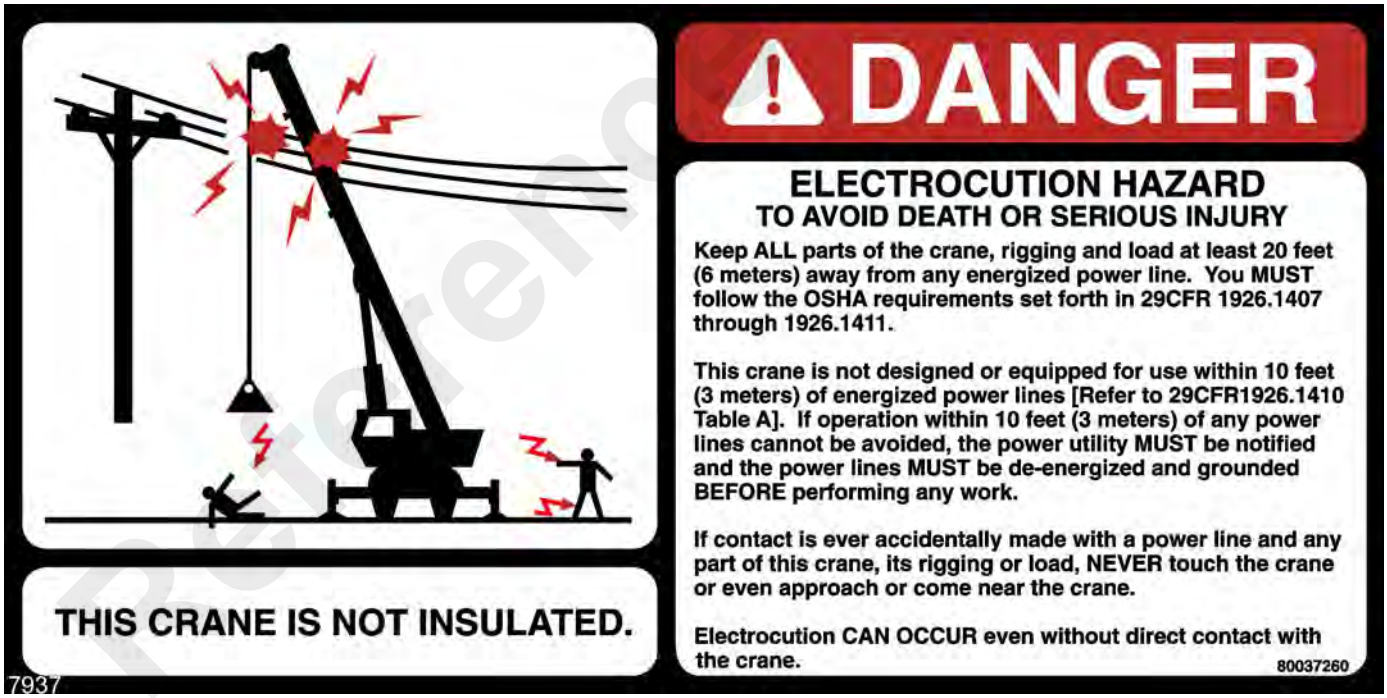

Crane operation is dangerous when close to an energized electrical power source. Exercise extreme caution and prudent judgement. Operate slowly and cautiously when in the vicinity of power lines.

Before operating this crane in the vicinity of electrical power lines or equipment, notify the power utility company. Obtain positive and absolute assurance that the power has been turned off.

This crane is **not insulated**. Always consider all parts of the load and the crane, including the hoist rope, wire rope, pendant cables, and tag lines, as conductors. You, the operator, are responsible for alerting all personnel of dangers associated with electrical power lines and equipment. Do not allow unnecessary personnel in the vicinity of the crane while operating. Permit no one to lean against or touch the crane. Permit no one, including riggers and load handlers, to hold the load, load lines, tag lines, or rigging gear.

If the load, hoist rope, boom, or any portion of the crane contacts or comes too close to an electrical power source, everyone in, on, and around the crane can be seriously injured or killed.

Reference Only

Most overhead power lines **are not** insulated. Treat all overhead power lines as being energized unless you have reliable information to the contrary from the utility company or owner.

The rules in this *Operator Manual* must be followed at all times, even if the electrical power lines or equipment have been de-energized.

The safest way to avoid electrocution is to stay away from electrical power lines and electrical power sources.

It is not always necessary to contact a power line or power source to become electrocuted. Electricity, depending on magnitude, can arc or jump to any part of the load, load line, or crane boom if it comes too close to an electrical power source. Low voltages can also be dangerous.

Set-Up and Operation

During crane use, assume that every line is energized ("hot" or "live") and take the necessary precautions.

Set up the crane in a position such that the load, boom, or any part of the crane and its attachments cannot be moved to within 6 m (20 ft) of electrical power lines or equipment. This includes the crane boom (fully extended to maximum height, radius, and length) and all attachments (jibs, rigging, loads, etc.). Overhead lines tend to blow in the wind so allow for lines' movement when determining safe operating distance.

A suitable barricade should be erected to physically restrain the crane and all attachments (including the load) from entering into an unsafe distance from electrical power lines or equipment.

Plan ahead and always plan a safe route before traveling under power lines. Rider poles should be erected on each side of a crossing to assure sufficient clearance is maintained.

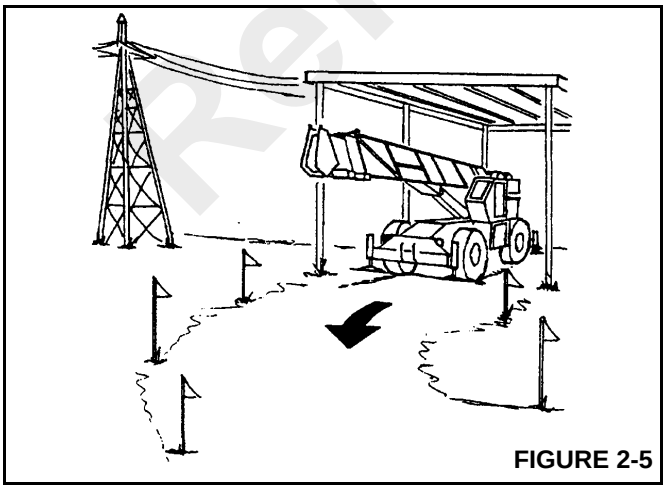

FIGURE 2-5

United States OSHA regulations require a flagman when operating in close proximity to energized power lines.

Appoint a reliable and qualified signal person, equipped with a loud signal whistle or horn and voice communication equipment, to warn the operator when any part of the crane or load moves near a power source. This person should have no other duties while the crane is working.

Tag lines should always be made of non-conductive materials. Any tag line that is wet or dirty can conduct electricity.

Do not store materials under power lines or close to electrical power sources.

Electrocution Hazard Devices

The use of insulated links, insulated boom cages/guards, proximity warning devices, or mechanical limit stops does not assure that electrical contact will not occur. Even if codes or regulations require the use of such devices, failure to follow the rules listed here may result in serious injury or death. You should be aware that such devices have limitations and you should follow the rules and precautions outlined in this manual at all times even if the crane is equipped with these devices.

Insulating links installed into the load line afford limited protection from electrocution hazards. Links are limited in their lifting abilities, insulating properties, and other properties that affect their performance. Moisture, dust, dirt, oils, and other contaminants can cause a link to conduct electricity. Due to their capacity ratings, some links are not effective for large cranes and/or high voltages/currents.

The only protection that may be afforded by an insulated link is below the link (electrically downstream), provided the link has been kept clean, free of contamination, has not been scratched or damaged, and is periodically tested (just before use) for its dielectric integrity.

Boom cages and boom guards afford limited protection from electrocution hazards. They are designed to cover only the boom nose and a small portion of the boom. Performance of boom cages and boom guards is limited by their physical size, insulating characteristics, and operating environment (e.g. dust, dirt, moisture, etc.). The insulating characteristics of these devices can be compromised if not kept clean, free of contamination, and undamaged.

Proximity sensing and warning devices are available in different types. Some use boom nose (localized) sensors and others use full boom length sensors. No warning may be given for components, cables, loads, and other attachments located outside of the sensing area. Much reliance is placed upon you, the operator, in selecting and properly setting the sensitivity of these devices.

Never rely solely on a device to protect you and your fellow workers from danger.

Some variables you must know and understand are:

Reference Only

- Proximity devices are advertised to detect the existence of electricity and not its quantity or magnitude.
- Some proximity devices may detect only alternating current (AC) and not direct current (DC).
- Some proximity devices detect radio frequency (RF) energy and others do not.
- Most proximity devices simply provide a signal (audible, visual, or both) for the operator; this signal must not be ignored.
- Sometimes the sensing portion of the proximity devices becomes confused by complex or differing arrays of power lines and power sources.

Do not depend on grounding. Grounding of a crane affords little or no protection from electrical hazards. The effectiveness of grounding is limited by the size of the conductor (wire) used, the condition of the ground, the magnitude of the voltage and current present, and numerous other factors.

Electrical Contact

If the crane should come in contact with an energized power source, you must:

1. Stay in the crane cab. **Don't panic**.
2. Immediately warn personnel in the vicinity to stay away.
3. Attempt to move the crane away from the contacted power source using the crane's controls which may have remained functional.
4. Stay in the crane until the power company has been contacted and the power source has been de-energized. **No one** must attempt to come close to the crane or load until the power has been turned off.

Only as a last resort should an operator attempt to leave the crane upon contacting a power source. If it is absolutely necessary to leave the operator's station, **jump completely clear of the crane. Do not step off.** Hop away with both feet together. **Do not** walk or run.

Following any contact with an energized electrical source, the Manitowoc distributor must be immediately advised of the incident and consulted on necessary inspections and repairs. Thoroughly inspect the hoist rope and all points of contact on the crane. Should the dealer not be immediately available, contact Manitowoc Crane Care. The crane must not be returned to service until it is thoroughly inspected for any evidence of damage and all damaged parts are repaired or replaced as authorized by your Manitowoc distributor or Manitowoc Crane Care.

Special Operating Conditions and Equipment

Never operate the crane during an electrical thunderstorm.

When operating near transmitter/communication towers where an electrical charge can be induced into the crane or load:

- The transmitter shall be deenergized OR,
- Tests shall be made to determine if an electrical charge will be induced into the crane or load.
- The crane must be provided an electrical ground.
- If taglines are used, they must be non-conductive.
- Every precaution must be taken to dissipate induced voltages. Consult a qualified RF (radio frequency) Consultant. Also refer to local, state, and federal codes and regulations.

When operating cranes equipped with electromagnets, you must take additional precautions. Permit no one to touch the magnet or load. Alert personnel by sounding a warning signal when moving a load. Do not allow the cover of the electromagnet power supply to be open during operation or at any time the electrical system is activated. Shut down the crane completely and open the magnet controls switch prior to connecting or disconnecting magnet leads. Use only a non-conductive device when positioning a load. Lower the magnet to the stowing area and shut off power before leaving the operator's cab (if equipped) or operator's station.

PERSONNEL HANDLING

The American Society of Mechanical Engineers issued a new American National Standard entitled, *Personnel Lifting Systems,* ASME B30.23-2011:

> This Volume establishes the design criteria, equipment characteristics, and operational procedures that are required when hoisting equipment within the scope of the ASME B30 Standard is used to lift personnel. Hoisting equipment defined by the ASME B30 Standard is intended for material handling. It is not designed, manufactured, or intended to meet the standards for personnel handling equipment, such as ANSI/SIA A92 (Aerial Platforms). The equipment and implementation requirements listed in this Volume are not the same as that established for using equipment specifically designed and manufactured for lifting personnel. Hoisting equipment complying with the applicable Volumes of the ASME B30 Standard shall not be used to lift or lower personnel unless there are no less hazardous alternatives to providing access to the, area where work is to be performed. The lifting or lowering of personnel using ASME B30-compliant hoisting equipment is prohibited unless all applicable requirements of this volume have been met.

This new standard is consistent with the U.S. Department of Labor, Occupational Safety and Health Administration (OSHA) regulations for Construction that state, in 29CFR1926.1431:

> General requirements. The use of a crane or derrick to hoist employees on a personnel platform is prohibited, except when the erection, use, and dis-

Reference Only

mantling of conventional means of reaching the worksite, such as a personnel hoist, ladder, stairway, aerial lift, elevating work platform or scaffold, would be more hazardous or is not possible because of structural design or worksite conditions.

Additional requirements for crane operations are stated in ASME B30.5*, Mobile and Locomotive Cranes*, ASME B30.8, *Floating Cranes and Floating Derricks,* and in *OSHA regulations* 29CFR1910.180 *for General Industry* and 29CFR1926.1431 *for Construction*.

Use of a Manitowoc crane to handle personnel is acceptable provided:

- The requirements of the applicable national, state and local regulations and safety codes are met.
- A determination has been made that use of a crane to handle personnel is the least hazardous means to perform the work.
- The crane operator shall be qualified to operate the specific type of hoisting equipment used in the personnel lift.
- The crane operator must remain at the crane controls at all times when personnel are off the ground.
- The crane operator and occupants have been instructed in the recognized hazards of personnel platform lifts.
- The crane is in proper working order.
- The crane must be equipped with a boom angle indicator that is visible to the crane operator.
- The crane's *Load Chart* is affixed at the operator's station and readily accessible to the operator. The total weight of the loaded personnel platform and related rigging shall not exceed 50 percent of the rated capacity for the radius and configuration of the crane.
- The crane is level within one percent of level grade and located on a firm footing. Cranes with outriggers shall have them all deployed following manufacturer's specifications.
- The crane's *Operator Manual* and other operating manuals are at the operator's station and readily accessible to the operator.
- The platform meets the requirements as prescribed by applicable standards and regulations.
- For hoist rope suspended platforms:
  - The crane is equipped with a hook that can be closed and locked, eliminating the throat opening.
  - The crane is equipped with a functional anti-two-block device.
  - The platform is properly attached and secured to the load hook.
- For boom mounted platforms:
  - The platform is properly attached and secure.

To avoid death or serious injury:

- NEVER use this crane for bungee jumping or any form of amusement or sport.
- NEVER handle personnel on the loadline unless the requirements of applicable national, state and local regulations and safety codes are met.
- NEVER permit anyone to ride loads, hooks, slings or other rigging for any reason.
- NEVER get on or off a moving crane.
- NEVER allow anyone other than the operator to be on this crane while the machine is operating or traveling.
- NEVER allow anyone on the hoist access platform while traveling.

The following standards and regulations regarding personnel handling are available by mail at the following addresses:

- *ASME (formerly ANSI) B30 Series American National Safety Standards For Cableways, Cranes, Derricks, Hoists, Hooks, Jacks, and Slings*; *ASME B30.5, Mobile And Locomotive Cranes, and ASME B30.23, Personnel Lifting Systems*, are available by mail from the ASME, 22 Law Drive, Fairfield, New Jersey, 0700-2900
- *US DOL/OSHA Rules and Regulations* are available by mail from the Superintendent of Documents, PO Box 371954, Pittsburgh, PA, 15250-7954.

ENVIRONMENTAL PROTECTION

Dispose of waste properly! Improperly disposing of waste can threaten the environment.

Potentially harmful waste used in Manitowoc cranes includes — but is not limited to — oil, fuel, grease, coolant, air conditioning refrigerant, filters, batteries, and cloths which have come into contact with these environmentally harmful substances.

Handle and dispose of waste according to local, state, and federal environmental regulations.

When filling and draining crane components, observe the following:

- Do not pour waste fluids onto the ground, down any drain, or into any source of water.
- Always drain waste fluids into leak proof containers that are clearly marked with what they contain.
- Always fill or add fluids with a funnel or a filling pump.
- Immediately clean up any spills.

Reference Only

MAINTENANCE

The crane must be inspected prior to use on each work shift. The owner, user, and operator must ensure that routine maintenance and lubrication are being dutifully performed. **Never** operate a damaged or poorly maintained crane.

Manitowoc continues to recommend that cranes be properly maintained, regularly inspected and repaired as necessary. Manitowoc reminds crane owners to ensure that all safety decals are in place and legible. Manitowoc continues to urge crane owners to upgrade their cranes with rated capacity limiter and control lever lockout systems for all lifting operations.

Shut down the crane while making repairs or adjustments.

Always perform a function check after repairs have been made to ensure proper operation. Load tests should be performed when structural or lifting members are involved.

Follow all applicable safety precautions in this manual when performing crane maintenance as well as crane operations.

Keep the crane free of mud, dirt, and grease at all times. Dirty equipment introduces hazards, wears-out faster, and makes proper maintenance difficult. Cleaning solutions used should be non-flammable, non-toxic and appropriate for the job.

Routine maintenance and inspection of this crane must be performed by a qualified person(s) according to the recommendations in the *Manitowoc Crane Care Maintenance and Inspection Manual*. Any questions regarding procedures and specifications should be directed to your Manitowoc distributor.

Service and Repairs

WARNING

Fall Hazard!

Working at elevated heights without using proper fall protection can result in severe injury or death.

Always use proper fall protection as required by local, state or federal regulations.

Service and repairs to the crane must only be performed by a qualified person. All service and repairs must be performed in accordance with manufacturer's recommendations, this manual, and the service manual for this machine. If there is any question regarding maintenance procedures or specifications, contact your Manitowoc distributor for assistance.

Qualified person is defined as one who by reason of knowledge, training and experience is thoroughly familiar with the crane's operation and required maintenance as well as the hazards involved in performing these tasks.

Training and qualification of maintenance and repair personnel are crane owner's responsibility.

Any modification, alteration, or change to a crane which affects its original design and is not authorized and approved by Manitowoc is **strictly prohibited**. All replacement parts must be Manitowoc approved. Such action invalidates all warranties and makes the owner/user liable for any resultant accidents.

Hydraulic Fluid:

- Do not use your hand or any part of your body to check for hydraulic fluid leaks when the engine is running or the hydraulic system is under pressure. Fluid in the hydraulic system can be under enough pressure that it will penetrate the skin, causing serious injury or death. Use a piece of cardboard, or piece of paper, to search for leaks. Wear gloves to protect your hands from spraying fluid.
- If any hydraulic fluid is injected into the skin, obtain medical attention immediately or gangrene may result.
- Do not attempt to repair or tighten any hydraulic hose or fitting while the engine is running, or when the hydraulic system is under pressure.
- Never disconnect any hydraulic lines unless the boom is fully lowered, the engine is shut off, and the hydraulic pressure is relieved. To relieve hydraulic pressure, stop the engine, turn the ignition switch to RUN and move the hydraulic controls in both directions several times.

WARNING

Pressurized Fluid Hazard!

Hydraulic pressure may still be present in portions of the hydraulic system due to accumulators or trapped circuitry.

- Hot hydraulic fluid will cause severe burns. Wait for the fluid to cool before disconnecting any hydraulic lines.
- Hydraulic fluid can cause permanent eye injury. Wear appropriate eye protection.

Moving Parts:

- Do not place limbs near moving parts. Amputation of a body part may result. Turn off the engine and wait until the fan and belts stop moving before servicing crane.
- Pinch points, which result from relative motion between mechanical parts, are areas of the machine that can cause personal injury or death. Do not place limbs or your body in contact with pinch points either on or around the machine. Care must be taken to prevent

Reference Only

motion between pinch points when performing maintenance and to avoid such areas when movement is possible.

- Do not allow persons to stand near extending or lowering outriggers. Foot crushing could occur

Before performing any maintenance, service or repairs on the crane:

- The boom should be fully retracted and lowered and the load placed on the ground.
- Do not get under a raised boom unless the boom is blocked up safely. Always block up the boom before doing any servicing that requires the boom to be raised.
- Stop the engine and disconnect the battery.
- Controls should be properly tagged. Never operate the crane if it is **tagged-out** nor attempt to do so until it is restored to proper operating condition and all tags have been removed by the person(s) who installed them.

After maintenance or repairs:

- Replace all guards and covers that have been removed.
- Remove all tags, connect the battery, and perform a function check of all operating controls.
- Consult with Manitowoc Crane Care to determine if load testing is required after a structural repair is performed.

Lubrication

The crane must be lubricated according to the manufacturer's recommendations for lubrication points, time intervals, and types. Lubricate at more frequent intervals when working under severe conditions.

Exercise care when servicing the hydraulic system of the crane, as pressurized hydraulic oil can cause serious injury. The following precautions must be taken when servicing the hydraulic system:

- Follow the manufacturer's recommendations when adding oil to the system. Mixing the wrong fluids could destroy seals, causing component failure.
- Be certain all lines, components, and fittings are tight before resuming operation.

Tires

WARNING

Possible equipment damage and/or personal injury!

Driving the crane with a tire and split-rim assembly under inflated at 80% or less of its recommended pressure can cause the wheel and/or tire to fail. Per *OSHA Standard 1910.177(f)(2)*, when a tire has been driven under inflated at 80% or less of its recommended pressure, it must first be completely deflated, removed from the axle, disassembled, and inspected before re-inflation.

Inspect the tires for nicks, cuts, embedded material, and abnormal wear.

Ensure all lug nuts are properly torqued.

Ensure pneumatic tires are inflated to the proper pressure (refer to the *Load Chart*). When inflating tires, use a tire gauge, clip-on inflator, and extension hose which will permit standing clear of the tire while inflating.

HOIST ROPE

Use **only** the hoist rope specified by Manitowoc as indicated on the crane's *Capacity Chart*. Substitution of an alternate hoist rope may require the use of a different permissible line pull and, therefore, require different reeving.

NOTE: Hoist rope may be purchased by contacting Manitowoc Crane Care.

Wire Rope

Always make daily inspections of the wire rope, keeping in mind that all wire rope will eventually deteriorate to a point where it is no longer usable. Refuse to work with worn or damaged wire rope. Wire rope shall be taken out of service when any of the following conditions exist:

- For rotation-resistant running ropes: more than two (2) broken wires in a length of rope equal to six (6) times the rope diameter, or more than four (4) broken wires in a length of rope equal to thirty (30) times the rope diameter.
- For running ropes other than rotation resistant: six (6) broken wires in one rope lay or three (3) broken wires in one strand.
- One valley break where the wire fractures between strands in a running rope is cause for removal.
- Abrasion of the rope resulting in a 5% reduction in the original wire diameter.

Reference Only

- Any kinking, bird caging, crushing, corrosion, or other damage resulting in distortion of the rope structure.
- Rope that has been in contact with a live power line or has been used as a ground in an electric circuit (eg. welding) may have wires that are fused or annealed and must be removed from service.
- In standing ropes, more than three (3) breaks in one rope lay in sections beyond the end connection or more than two (2) broken wires at an end connection.
- Core deterioration, usually observed as a rapid reduction in rope diameter, is cause for immediate removal of the rope.

The following is a brief outline of the basic information required to safely use wire rope.

- Wire ropes wear out. The strength of a wire rope begins to decrease when the rope is put to use and continues to decrease with each use. Wire rope will fail if worn-out, overloaded, misused, damaged or improperly maintained.
- The nominal strength, sometimes called catalog strength, of a wire rope applies only to a new, unused rope.
- The nominal strength of a wire rope should be considered the straight line pull which will actually break a new unused rope. The nominal strength of a wire rope should never be used as its working load.
- Each type of fitting attached to a wire rope has a specific efficiency rating which can reduce the working load of the wire rope assembly or rope system.
- Never overload a wire rope. This means never use the wire rope where the load applied to it is greater than the working load determined by the rope manufacturer.
- Never “shock load” a wire rope. A sudden application of force or load can cause both visible external and internal damage. There is no practical way to estimate the force applied by shock loading a rope. The sudden release of a load can also damage a wire rope.
- Lubricant is applied to the wires and strands of a wire rope when it is manufactured. The lubricant is depleted when the rope is in service and should be replaced periodically. Refer to the *Service Manual* for more information.
- In the U.S.A., regular inspections of the wire rope and keeping of permanent records signed by a qualified person are required by OSHA for almost every wire rope application. The purpose of the inspection is to determine whether or not a wire rope may continue to be safely used on the application. Inspection criteria, including number and location of broken wires, wear and elongation, have been established by OSHA, ANSI, ASME and similar organizations. See the *Service Manual* for inspection procedures.

  When inspecting ropes and attachments, keep all parts of your body and clothing away from rotating hoist drums and all rotating sheaves. Never handle the rope with bare hands.

  Some conditions that lead to problems in wire rope systems include:

  - Sheaves that are too small, worn or corrugated cause damage to a wire rope.
  - Broken wires mean a loss in strength.
  - Kinks permanently damage a wire rope and must be avoided.
  - Wire ropes are damaged by knots. Wire rope with knots must never be used.
  - Environmental factors such as corrosive conditions and heat can damage a wire rope.
  - Lack of lubrication can significantly shorten the useful life of a wire rope.
  - Contact with electrical wires and resulting arcing will damage a wire rope.
- An inspection should include verification that none of the specified removal criteria for this usage are met by checking for such things as:
  - Surface wear; nominal and unusual.
  - Broken wires; number and location.
  - Reduction in diameter.
  - Rope stretch (elongation).
  - Integrity of end attachments.
  - Evidence of abuse or contact with another object.
  - Heat damage.
  - Corrosion.

NOTE: A more detailed wire rope inspection procedure is given in the *Service Manual*.

- When a wire rope has been removed from service because it is no longer suitable for use, it must not be reused on another application.

When installing a new rope:

- Keep all parts of your body and clothing away from rotating hoist drums and all rotating sheaves.
- Never handle the wire rope with bare hands.
- Follow proper instructions for removing rope from a reel.
- Apply back tension to the storage/payoff reel of the new rope to insure tight, even spooling onto the hoist drum.

Reference Only

- Operate the new rope - first through several cycles at light load and then through several cycles at intermediate load to allow the rope to adjust to operating conditions.

When using a wedge socket:

- Always inspect socket, wedge, and pin for correct size and condition.
- Do not use parts that are damaged, cracked, or modified.
- Assemble the wedge socket with live end of rope aligned with the centerline of pin and assure proper length of tail (dead end) protrudes beyond the socket.

Synthetic Hoist Rope

For detailed information concerning synthetic hoist rope, refer to KZ100 Synthetic Crane Hoist Line Manual P/N 9828100734 available by contacting Manitowoc Crane Care.

During installation and setup, care must be taken to avoid overlap and crossing of wire rope and synthetic hoist ropes.

Always make daily inspections of the hoist rope, keeping in mind that all hoist rope will eventually deteriorate to a point where it is no longer usable. Refuse to work with worn or damaged hoist rope.

During regular inspections, operator shall ensure that crane surfaces such as wear pads, sheaves, etc have not been damaged in a manner that can then damage the synthetic hoist rope.

NOTE: Example; if usage of a wire rope has cut grooves with sharp edges in a wear pad, they need to be addressed before the synthetic hoist rope is used in that same position.

Sheaves

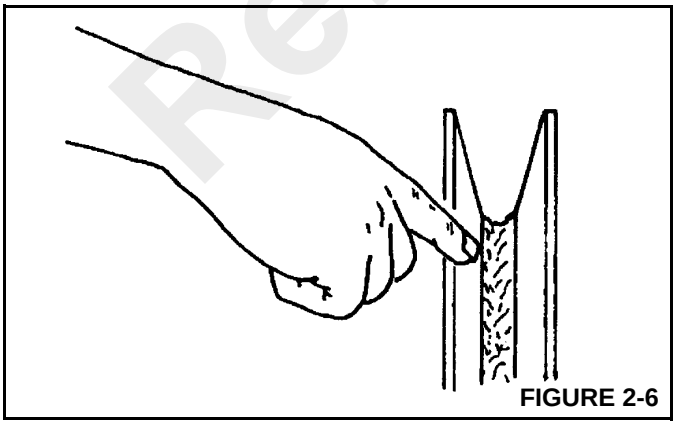

FIGURE 2-6

Inspect the boom nose and hook block sheaves for proper operation, excessive wear, and damage every 50 hours or weekly. Inoperable, damaged and/or worn sheaves cause rapid deterioration of rope.

Ensure sheaves carrying ropes that can be momentarily unloaded are equipped with close fitting guards or other devices to guide the rope back into the groove when the load is reapplied. Ensure sheaves in the lower load block are equipped with close fitting guards that will prevent the ropes from becoming fouled when the block is lying on the ground with loose ropes.

To attain maximum hoist rope life and minimize hook block rotation, it is recommended that even numbers of parts-of-line be used in multiple-part reeving whenever possible.

The use of nylon (polyamide) sheaves, as compared with metallic sheaves, may change the replacement criteria of rotation-resistant hoist rope.

NOTE: The use of cast nylon (polyamide) sheaves will substantially increase the service life of rope. However, conventional rope retirement criteria based only upon visible wire breaks may prove inadequate in predicting rope failure. The user of cast nylon sheaves is therefore cautioned that a retirement criteria should be established based upon the user's experience and the demands of his application.

Batteries

Battery electrolyte must not be allowed to contact the skin or eyes. If this occurs, flush the contacted area with water and consult a doctor immediately.

When checking and maintaining batteries, exercise the following procedures and precautions:

- Wear safety glasses when servicing batteries.
- If equipped, disconnect battery with the battery disconnect switch before disconnecting the ground battery cable. For cranes with a Cummins engine using an engine ECM:
  - **a.** Ensure that the key switch has been off for 2 minutes.
  - **b.** Turn the battery disconnect switch to the OFF position.
  - **c.** Remove the ECM power fuse.
  - **d.** Remove negative battery cables.
- Do not break a live circuit at the battery terminal. Disconnect the ground battery cable first when removing a battery and connect it last when installing a battery.
- Do not short across the battery posts to check charge. Short circuit, spark, or flame could cause battery explosion.
- If applicable, maintain battery electrolyte at the proper level. Check the electrolyte with a flashlight.

Reference Only

- If applicable to your crane, check battery test indicator on maintenance-free batteries.
- Check battery condition only with proper test equipment. Batteries shall not be charged except in an open, well-ventilated area that is free of flame, smoking, sparks, and fire.

Engine

Fuel the crane only with the engine turned off. Do not smoke while fueling the crane. Do not store flammable materials on the crane.

Be familiar with the location and use of the nearest fire extinguisher.

Be careful when checking the engine coolant level. The fluid may be hot and under pressure. Shut down the engine and allow the radiator time to cool before removing the radiator cap.

Shut down the engine and disconnect the battery before performing maintenance. If unable to do so for the task required, keep hands clear of the engine fan and other moving parts while performing maintenance.

Be careful of hot surfaces and hot fluids when performing maintenance on or around the engine.

Do not use ether to start the engine on cranes equipped with intake manifold grid heaters.

The engine can enter into a engine exhaust cleaning mode where the exhaust temperature can be high, ensure the exhaust is not pointed at materials that can melt, burn or explode.

TRANSPORTING THE CRANE

Before transporting the crane, check the suitability of the proposed route with regard to the crane height, width, length, and weight.

Check load limits of bridges on the travel route and ensure they are greater than the combined weight of the crane and transporting vehicle.

When loading or unloading the crane on a trailer or railroad car, use a ramp capable of supporting the weight of the crane.

Ensure the crane is adequately secured to the transporting vehicle.

Do not use the dead end lug (1, Figure 2-7) on the boom nose for tying down the boom during transport. Damage to the lug and boom can result from usage as a tie down point.

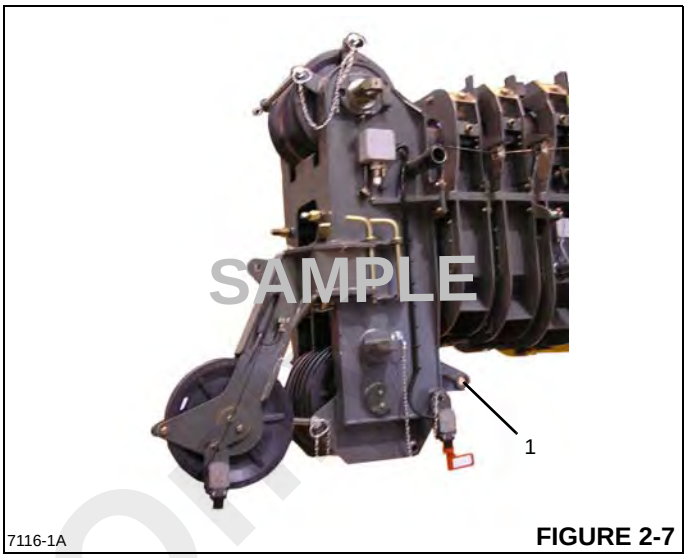

FIGURE 2-7

Before transporting the crane on a road or highway, first check state and local restrictions and regulations.

Either the hook block may be reeved over the main boom nose or the headache ball may be reeved over the main boom nose or auxiliary boom nose; the other must be removed. If the hook block or headache ball remains reeved on the boom, it must be secured at the tie down on the carrier to prevent swinging.

When using hookblock tie downs, excessive loading can be applied by pulling the cable too tight, particularly when reeved with multiple part lines. When the cable is hooked into the hookblock tie down, the cable should be merely “snugged-up” with adequate slack provided at the center line of sheave to anchor point. Do not draw cable taut. Care must be exercised anytime any crane function is being performed while the cable is hooked into the hookblock tie down.

TRAVEL OPERATION

Only the crane operator shall occupy the crane when traveling.

When traveling, the boom should be completely retracted and lowered to the travel position and the turntable pin swing lock, if equipped, should be engaged. If equipped with boom rest, lower the boom into the boom rest and engage the turntable lock.

Strictly adhere to the guidelines and restrictions in the *Load Chart* for pick and carry operations.

RT and Industrial cranes are manufactured with no axle suspension system. Traveling at high speeds, especially on rough ground, may create a bouncing effect that can result in loss of control. If bouncing occurs, reduce travel speed.

Death or serious injury could result from being crushed by revolving tires.

Reference Only

Stunt driving and horse-play are strictly prohibited. Never allow anyone to hitch a ride or get on or off a moving crane.

Follow the instructions in this manual when preparing the crane for travel.

If using a boom dolly/trailer, thoroughly read and understand all the steps and safety precautions in this manual for setup and travel.

When driving the crane, ensure the cab is down, if equipped with a tilting cab.

Secure the hook block and other items before moving the crane.

Watch clearances when traveling. Do not take a chance of running into overhead or side obstructions.

When moving in tight quarters, post a signal person to help guard against collisions or bumping structures.

Before traveling a crane, check suitability of proposed route with regard to crane height, width, and length.

Never back up without the aid of a signal person to verify the area behind the crane is clear of obstructions and/or personnel.

On cranes equipped with air-operated brakes, do not attempt to move the crane until brake system air pressure is at operating level.

Check load limit of bridges. Before traveling across bridges, ensure they will carry a load greater than the crane's weight.

If it is necessary to take the crane on a road or highway, check state and local restrictions and regulations.

Keep lights on, use traffic warning flags and signs, and use front and rear flag vehicles when necessary. Check state and local restrictions and regulations.

Always drive the crane carefully obeying speed limits and highway regulations.

Stay alert at the wheel.

If equipped, ensure that the hoist access platform hand rail and step are in the travel configuration.

Slopes:

- Pick and carry on level surfaces only.
- Refer to the *Operation Section* for more detailed information on traveling on slopes.
- Driving across a slope is dangerous, as unexpected changes in slope can cause tip over. Ascend or descend slopes slowly and with caution.
- When operating on a downhill slope, reduce travel speed and downshift to a low gear to permit compression braking by the engine and aid the application of the service brakes.

WORK PRACTICES

Personal Considerations

Always adjust the seat and lock it in position, and fasten the seat belt securely before you start the engine.

Do not wear loose clothing or jewelry that can get caught on controls or moving parts. Wear the protective clothing and personal safety gear issued or called for by the job conditions. Hard hat, safety shoes, ear protectors, reflective clothing, safety goggles, and heavy gloves may be required.

Crane Access

WARNING

Fall Hazard!

Working at elevated heights without using proper fall protection can result in severe injury or death.

Always use proper fall protection as required by local, state or federal regulations.

You must take every precaution to ensure you do not slip and/or fall off the crane. Falling from any elevation could result in serious injury or death.

Never exit or enter the crane cab or deck by any other means than the access system(s) provided (i.e., steps and grab handles). Use the recommended hand-holds and steps to maintain a three-point contact when getting on or off the crane.

If necessary, use a ladder or aerial work platform to access the boom nose.

Do not make modifications or additions to the crane's access system that have not been evaluated and approved by Manitowoc Crane Care.

Do not step on surfaces on the crane that are not approved or suitable for walking and working. All walking and working surfaces on the crane should be clean, dry, slip-resistant, and have adequate supporting capacity. Do not walk on a surface if slip-resistant material is missing or excessively worn.

Do not use the top of the boom as a walkway.

Do not step on the outrigger beams or outrigger pads (floats) to enter or exit the crane.

Use the hoist access platform (if equipped) when working in the hoist area.

Wear shoes with a highly slip-resistant sole material. Clean any mud or debris from shoes before entering the crane cab/operator's station or climbing onto the crane superstructure. Excessive dirt and debris on the hand-holds, access steps,

Reference Only

or walking/working surfaces could cause a slipping accident. A shoe that is not clean might slip off a control pedal during operation.

Do not allow ground personnel to store their personal belongings (clothing, lunch boxes, water coolers, and the like) on the crane. This practice will prevent ground personnel from being crushed or electrocuted when they attempt to access personal belongings stored on the crane.

Job Preparation

Before crane use:

- Barricade the entire area where the crane is working and keep all unnecessary personnel out of the work area.
- Ensure that the crane is properly equipped including access steps, covers, doors, guards, and controls.
- Conduct a visual inspection for cracked welds, damaged components, loose pins/bolts, and wire connections. Any item or component that is found to be loose or damaged (broken, chipped, cracked, worn-through, etc.) must be repaired or replaced. Inspect for evidence of improper maintenance (consult your *Service Manual*).
- Check for proper functioning of all controls and operator aids (for example, RCL).
- Check all braking (for example, wheel, hoist, and swing brakes) and holding devices before operation.

You must ensure that the outriggers and jack cylinders are properly extended and set before performing any lifting operations. On models equipped with outriggers that can be pinned at the mid-extend position, the outriggers must also be pinned when operating from the mid-extend position.

Clear all personnel from the outrigger area before extending or retracting the outriggers. Carefully follow the procedures in this *Operator Manual* when extending or retracting the outriggers. Death or serious injury could result from improper crane set up on outriggers.

Be familiar with surface conditions and the presence of overhead obstructions and power lines.

Working

Operator shall be responsible for all operations under his/her direct control. When safety of an operation is in doubt, operator shall stop the crane's functions in a controlled manner. Lift operations shall resume only after safety concerns have been addressed or the continuation of crane operations is directed by the lift supervisor.

Know the location and function of all crane controls.

Make sure all persons are away from the crane and the Travel Select Lever is in the "N" (Neutral) position with the Parking Brake engaged before starting the engine.

Sparks from the crane's electrical system and/or engine exhaust can cause an explosion. **Do not** operate this crane in an area with flammable dust or vapors, unless good ventilation has removed the hazard.

Carbon monoxide fumes from the engine exhaust can cause suffocation in an enclosed area. Good ventilation is very important when operating the crane.

Before actuating swing or any other crane function, sound the horn and verify that all personnel are clear of rotating and moving parts.

Never operate the crane when darkness, fog, or other visibility restrictions make operation unsafe. Never operate a crane in thunderstorms or high winds.

Always be aware of your working environment during operation of the crane. Avoid contacting any part of the crane with external objects.

Clear all personnel from the counterweight and superstructure area before removing the counterweight.

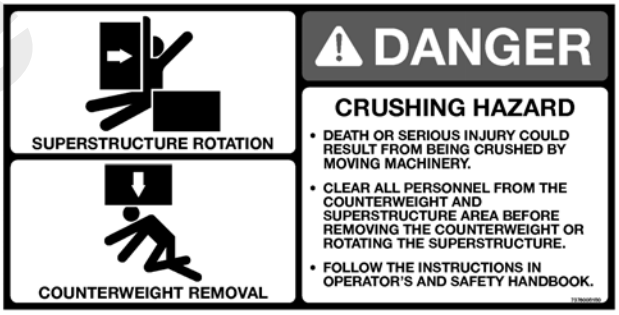

Keep unauthorized personnel clear of the working area during operation.

Only the crane operator shall occupy the crane when in operation.

You must always be aware of everything around the crane while lifting or traveling. If you are unable to clearly see in the direction of motion, you must post a look out or signal person before moving the crane or making a lift. Sound the horn to warn personnel

Operate the crane only from the operator's seat. Do not reach in a window or door to operate any controls.

Operate the crane slowly and cautiously, looking carefully in the direction of movement.

A good practice is to make a "dry run" without a load before making the first lift. Become familiar with all factors peculiar to the job site.

Ensure the hoist rope is properly routed on the hook block and boom nose and that all rope guards are in place.

Reference Only

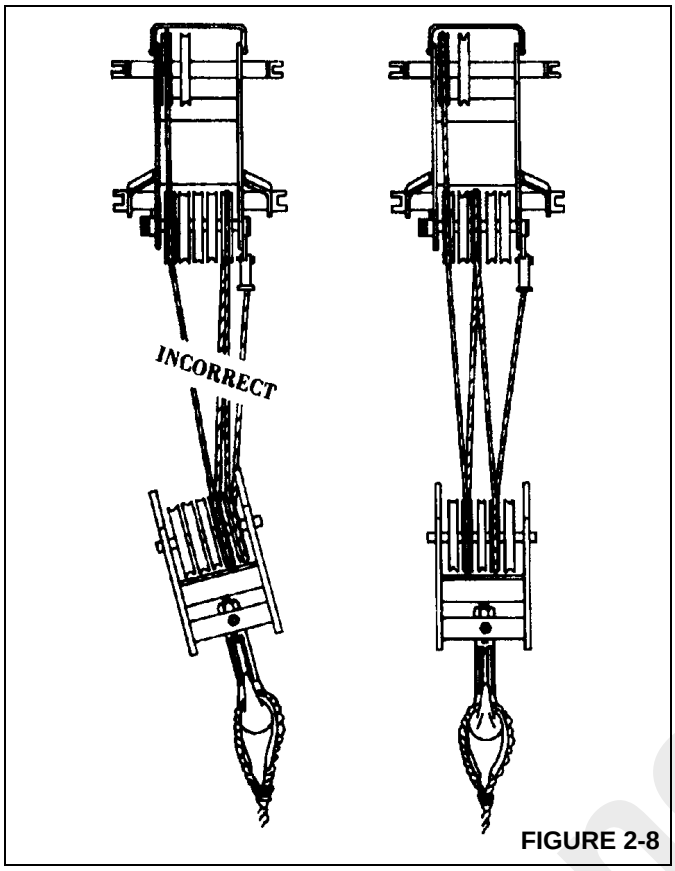

FIGURE 2-8

Lifting

Use enough parts of line for all lifts and check all lines, slings, and chains for correct attachment. To obtain maximum lifting capacities, the hook block must be set up with enough parts of line. Too few parts of line can result in failure of the hoist rope or hoist. **No less than three wraps of wire rope** should remain on the hoist drum. **No less than eight wraps of synthetic rope** should remain on the hoist drum. When slings, ties, hooks, etc., are used, make certain they are correctly positioned and secured before raising or lowering the loads.

Be sure the rigging is adequate before lifting. Use tag lines when possible to position and restrain loads. Personnel using tag lines should be on the ground.

Be sure good rigging practices are being used. Refuse to use any poorly maintained or damaged equipment. Never wrap the hoist cable around a load.

If using a clam bucket, do not exceed 80% of the crane's capacity.

Make certain the boom tip is centered directly over the load before lifting.

Ensure that all slings, ties, and hooks are correctly placed and secured before raising or lowering the load.

Be sure the load is well secured and attached to the hook with rigging of proper size and in good condition.

Check the hoist brake by raising the load a few inches, stopping the hoist and holding the load. Be sure the hoist brake is working correctly before continuing the lift.

When lowering a load always slow down the load's descent before stopping the hoist. Do not attempt to change speeds on multiple-speed hoists while the hoist is in motion.

Watch the path of the boom and load when swinging. Avoid lowering or swinging the boom and load into ground personnel, equipment, or other objects.

Lift one load at a time. Do not lift two or more separately rigged loads at one time, even if the loads are within the crane's rated capacity.

Never leave the crane with a load suspended. Should it become necessary to leave the crane, lower the load to the ground and stop the engine before leaving the operator's station.

Remember, all rigging equipment must be considered as part of the load. Lifting capacities vary with working areas. If applicable, permissible working areas are listed in the *Load Chart*. When swinging from one working area to another, ensure *Load Chart* capacities are not exceeded. Know your crane!

Stop the hook block from swinging when unhooking a load.

Swinging rapidly can cause the load to swing out and increase the load radius. Swing the load slowly. Swing with caution and keep the load lines vertical.

Look before swinging your crane. Even though the original setup may have been checked, situations do change.

Never swing or lower the boom into the carrier cab (if applicable).

Never push or pull loads with the crane's boom; never drag a load.

Do not subject crane to side loading. A side load can tip the crane or cause it to fail structurally.

If the boom should contact an object, stop immediately and inspect the boom. Remove the crane from service if the boom is damaged.

When lifting a load the boom may deflect causing the load radius to increase—this condition is made worse when the boom is extended. Ensure weight of load is within crane's capacity on *Load Chart*.

Avoid sudden starts and stops when moving the load. The inertia and an increased load radius could tip the crane over or cause it to fail structurally.

Use tag lines (as appropriate) for positioning and restraining loads. Check the load slings before lifting.

Reference Only

Be sure everyone is clear of the crane and work area before making any lifts.

Never swing over personnel, regardless of whether load is suspended from or attached to the boom.

Hand Signals

A single qualified signal person shall be used at all times when:

- Working in the vicinity of power lines.
- The crane operator cannot clearly see the load at all times.
- Moving the crane in an area or direction in which the operator cannot clearly see the path of travel.

At all times use standardized hand signals - previously agreed upon and completely understood by the operator and signal person.

If communication with the signal person is lost, crane movement must be stopped until communications are restored.

Keep your attention focused on the crane's operation. If for some reason you must look in another direction, stop all crane movement first.

Obey a signal to stop from anyone.

Reference Only

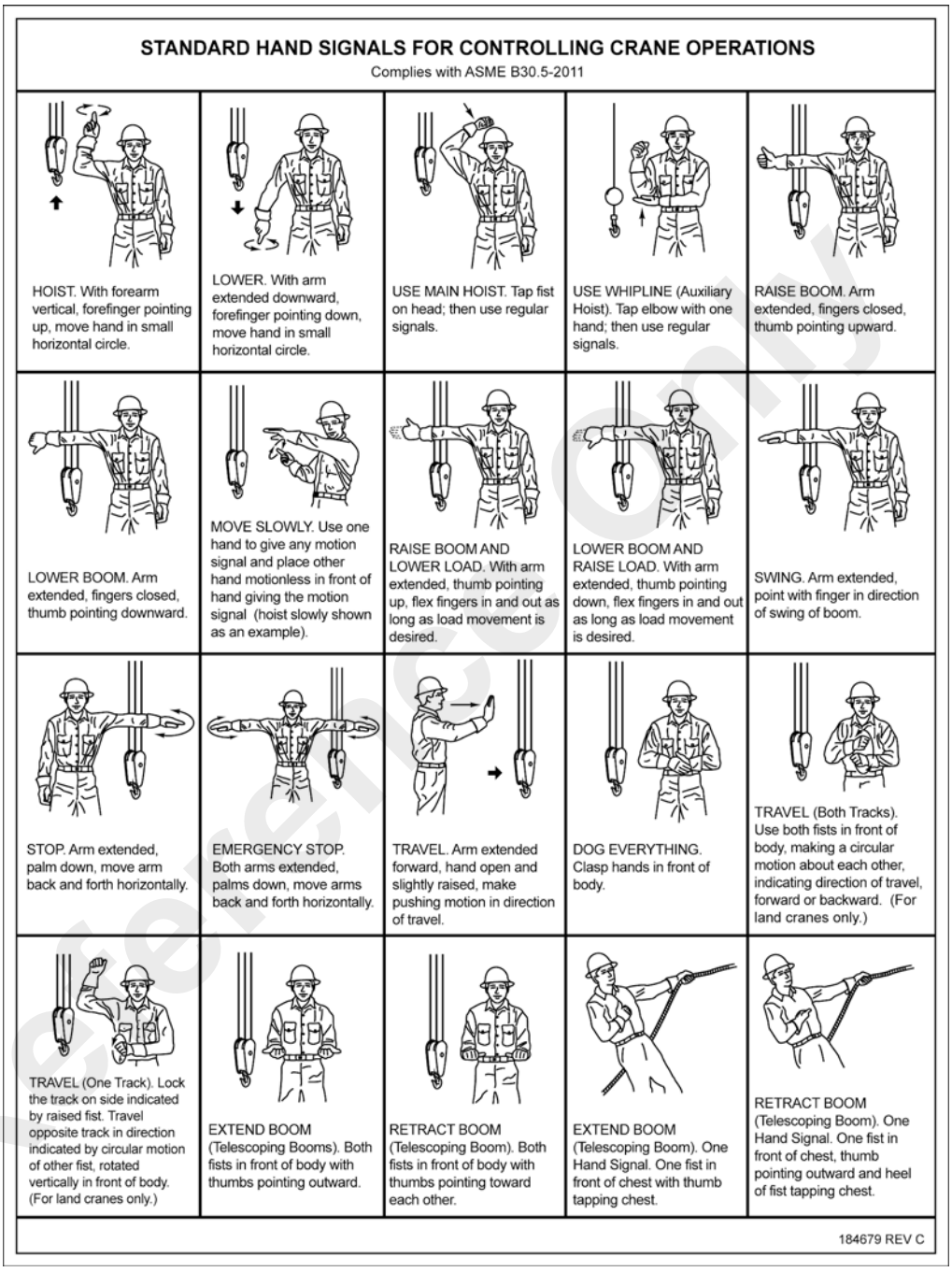

8496-1

FIGURE 2-9

Reference Only

JIB

To avoid death or serious injury, follow the procedures in this manual during erection, stowage, and use of the jib.

Install and secure all pins properly.

Control movement of the jib at all times.

Do not remove right side boom nose pins unless jib is properly pinned and secured on front and rear stowage brackets.

DANGER

Boom Extension Hazard!

To avoid death or serious injury, follow procedures in *Load Chart*, safety, and operation manuals during erection, stowage and use of jib. Install and secure all pins properly and control jib movement at all times.

Do not remove all the pins from both front and rear stowage brackets unless the jib is pinned to the right side of the boom nose.

Properly inspect, maintain, and adjust jib and mounting.

When assembling and disassembling jib sections, use blocking to adequately support each section and to provide proper alignment.

Stay outside of jib sections and lattice work.

Watch for falling or flying pins when they are being removed.

PARKING AND SECURING

DANGER

Tipping Hazard!

When parking the crane and leaving it unattended follow the instructions in Section 3 of this manual.

Failure to comply with these instructions may cause death or serious injury

When parking on a grade, apply the parking brake and chock the wheels.

Section 3 of this manual provides instructions for parking and securing a crane when it is to be left unattended. These instructions are intended to allow the crane to be placed in the most stable and secure position. However, Manitowoc recognizes that certain jobsite conditions may not permit the boom and jib of a crane to be fully lowered to the ground. When a qualified person at a jobsite determines that it is not practical to lower the boom to the ground, we recommend the following additional instructions be followed:

- The crane should be left in the smallest, most stable, valid operational configuration that the job site practically allows.
- The crane can not be left running, with a load on the hook, or in erection mode, or in wind conditions in excess of allowed values.
- The boom should be retracted as far as is practical, the crane configured in as stable a configuration as possible (boom angle, superstructure orientation, jib angle, etc.)
- In high winds the boom and jibs should be lowered, or secured. Changing weather conditions including but not limited to: wind, ice accumulation, precipitation, flooding, lightning, etc. should be considered when determining the location and configuration of a crane when it is to be left unattended.

SHUT-DOWN

Use the following steps when shutting down the crane:

- Engage the parking brake.
- Fully retract and lower the boom.
- Engage the swing lock pin or 360 degree swing lock (if equipped).
- Place crane function power switch to OFF (if equipped).
- Place controls in neutral position.
- Shut down the engine and remove the ignition key.
- Chock the wheels, if not on outriggers.
- Lock the operator's cab (if applicable) and install vandal guards, if used.

COLD WEATHER OPERATION

Cold weather operation requires additional caution on the part of the operator.

Check operating procedures in this manual for cold weather starting.

Don't touch metal surfaces that could freeze you to them.

Clean the crane of all ice and snow.

Allow ample time for hydraulic oil to warm up.

In freezing weather, park the crane in an area where it cannot become frozen to the ground. The drive line can be damaged when attempting to free a frozen crane.

If applicable to your crane, frequently check all air tanks for water in freezing weather.

If applicable to your crane, always handle propane tanks according to the supplier's instructions.

Never store flammable materials on the crane.

Reference Only

If cold weather starting aids are provided on your crane, use them. The use of aerosol spray or other types of starting fluids containing ether/volatiles can cause explosions or fire.

TEMPERATURE EFFECTS ON HOOK BLOCKS

The following information applies to Gunnebo Johnston crane hook blocks:

Never use a hook block in extreme temperatures...Sudden failure can occur.

Hook blocks shall not be heated above 82°C (180°F). Hook Block Working Load Limit is valid between 82°C (180°F) and service temperature given on the identification tag with normal lifting precautions.

Additional lifting precautions are required below the service temperature given on the identification tag because cold temperature begins to affect the hook block material properties.

Lifting above 75% of the Working Load Limit (WLL), at temperatures between the service temperature given on the identification tag and -40°C (-40°F), must (be) done at a slow and steady rate to avoid stress spikes common in normal hoisting dynamics.

75% of the WLL must not be exceeded, when lifting in temperatures below -40°C (-40°F).

TEMPERATURE EFFECTS ON HYDRAULIC CYLINDERS

Hydraulic oil expands when heated and contracts when cooled. This is a natural phenomena that happens to all liquids. The coefficient of expansion for API Group 1 hydraulic oil is approximately 0.00077 cubic centimeters per cubic centimeter of volume for 1°C of temperature change (0.00043 cubic inches per cubic inch of volume for 1°F of temperature change). **Thermal contraction will allow a cylinder to retract as the hydraulic fluid which is trapped in the cylinder cools.**

The change in the length of a cylinder is proportional to the extended length of the cylinder and to the change in temperature of the oil in the cylinder. For example, a cylinder extended 7.6 m (25 ft) in which the oil cools 15.5°C (60°F) would retract approximately 196 mm (7 3/4 in) [see Table 2-9 and Table 2-8]. The rate at which the oil cools depends on many factors and will be more noticeable with a larger difference in oil temperature verses the ambient temperature.

Thermal contraction coupled with improper lubrication or improper wear pad adjustments may, under certain conditions, cause a “stick-slip” condition in the boom. This “stick-slip” condition could result in the load not moving smoothly. Proper boom lubrication and wear pad adjustment is important to permit the boom sections to slide freely. Slow movement of the boom may be undetected by the operator unless a load is suspended for a long period of time. To minimize the effects of thermal contraction or “Stick-slip” it is recommended that the telescope control lever is activated periodically in the extend position to mitigate the effects of cooling oil.

If a load and the boom is allowed to remain stationary for a period of time and the ambient temperature is cooler than the trapped oil temperature, the trapped oil in the cylinders will cool. The load will lower as the telescope cylinder(s) retracts allowing the boom to come in. Also, the boom angle will decrease as the lift cylinder(s) retracts causing an increase in radius and a decrease in load height.

This situation will also occur in reverse. If a crane is set up in the morning with cool oil and the daytime ambient temperature heats the oil, the cylinders will extend in similar proportions.

Table 2-8 and Table 2-9 have been prepared to assist you in determining the approximate amount of retraction/extension that may be expected from a hydraulic cylinder as a result of change in the temperature of the hydraulic oil inside the cylinder. The chart is for dry rod cylinders. If the cylinder rod is filled with hydraulic oil, the contraction rate is somewhat greater.

NOTE: Operators and service personnel must be aware that load movement, as a result of this phenomena, can be easily mistaken as leaking cylinder seals or faulty holding valves. If leaking seals or faulty holding valves are suspected to be the problem, refer to Service Bulletin dealing with testing telescope cylinders. (*Service Bulletin 98-036* applies to TMS700 and *Service Bulletin G06-005A* applies to RT890 and RT9130.

Reference Only

Table 2-8: Boom Drift Chart (Cylinder length change in inches)

Coeff. =	0.00043	(in^3/in^3/ °F)								
STROKE	Temperature Change (°F)									
(FT.)	10	20	30	40	50	60	70	80	90	100
5	0.26	0.52	0.77	1.03	1.29	1.55	1.81	2.06	2.32	2.58
10	0.52	1.03	1.55	2.06	2.58	3.10	3.61	4.13	4.64	5.16
15	0.77	1.55	2.32	3.10	3.87	4.64	5.42	6.19	6.97	7.74
20	1.03	2.06	3.10	4.13	5.16	6.19	7.22	8.26	9.29	10.32
25	1.29	2.58	3.87	5.16	6.45	7.74	9.03	10.32	11.61	12.90
30	1.55	3.10	4.64	6.19	7.74	9.29	10.84	12.38	13.93	15.48
35	1.81	3.61	5.42	7.22	9.03	10.84	12.64	14.45	16.25	18.06
40	2.06	4.13	6.19	8.26	10.32	12.38	14.45	16.51	18.58	20.64
45	2.32	4.64	6.97	9.29	11.61	13.93	16.25	18.58	20.90	23.22
50	2.58	5.16	7.74	10.32	12.90	15.48	18.06	20.64	23.22	25.80
55	2.84	5.68	8.51	11.35	14.19	17.03	19.87	22.70	25.54	28.38
60	3.10	6.19	9.29	12.38	15.48	18.58	21.67	24.77	27.86	30.96

Length change in inches = Stroke (Ft.) X Temperature Change (°F) X Coeff. (in^3/in^3/ °F) X 12 in/ft

Table 2-9 Boom Drift Chart (Cylinder length change in millimeters)

Coeff. =	0.000774	(1/ °C)			***Metric***						
STROKE	Temperature Change (°C)										
(m)	5	10	15	20	25	30	35	40	45	50	55
1.5	6	12	17	23	29	35	41	46	52	58	64
3	12	23	35	46	58	70	81	93	104	116	128
4.5	17	35	52	70	87	104	122	139	157	174	192
6	23	46	70	93	116	139	163	186	209	232	255
7.5	29	58	87	116	145	174	203	232	261	290	319
9	35	70	104	139	174	209	244	279	313	348	383
10.5	41	81	122	163	203	244	284	325	366	406	447
12	46	93	139	186	232	279	325	372	418	464	511
13.5	52	104	157	209	261	313	366	418	470	522	575
15	58	116	174	232	290	348	406	464	522	581	639
16.5	64	128	192	255	319	383	447	511	575	639	702
18	70	139	209	279	348	418	488	557	627	697	766

Length change in mm = Stroke (m) X Temperature Change (°C) X Coeff. (1/ °C) X 1000 mm/m

Reference Only

MODEL SPECIFIC INFORMATION

Crane Stability

The RT770E on rubber load charts have a minimum radius of 3 m (9.8 ft) with a load. Without a load, a radius of 2.5 m (8.2 ft) is safe for 360° on rubber. A radius of less than 2.5 m (8.2 ft) must be avoided on rubber because of backward stability considerations.

Access Platform Hand Rail

Ensure that the hoist access platform hand rail (1) Figure 2-10 and step (2) (Fixed counterweight units only) is in the travel configuration. Remove pins from hand rail and rotate it down into the travel position, reinstall pins. Pull the step locking pin out, slide the step in to the travel position and release the lock pin.

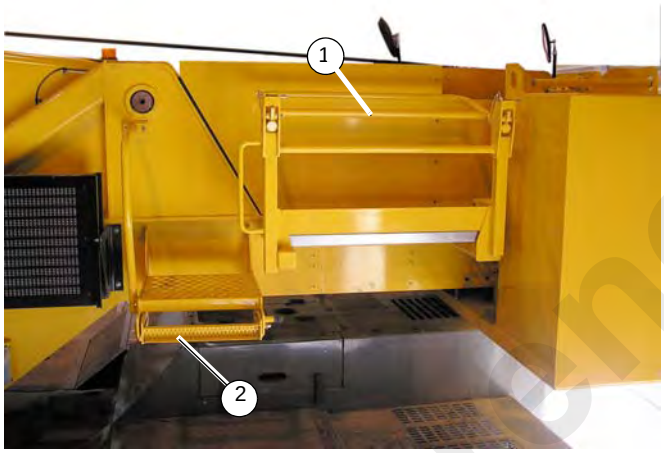

7649-20 **FIGURE 2-10**

Use the hoist access platform (1) Figure 2-11 when working in the hoist area (Fixed counterweight units only).

.

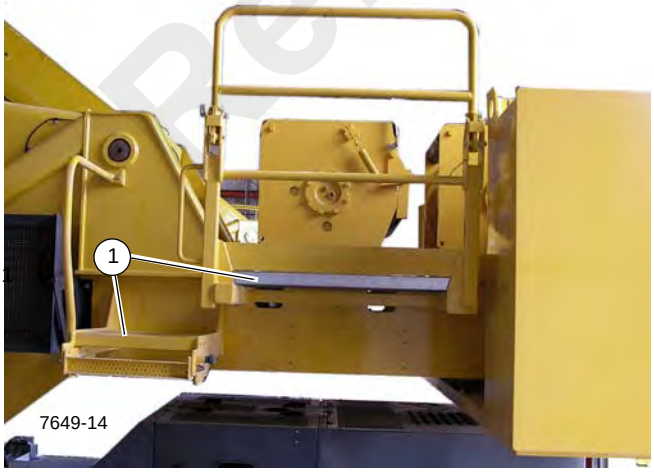

FIGURE 2-11

OVERLOAD INSPECTION

This information supplements the Rated Capacity Limiter (RCL) manual supplied with each Grove crane.

When the RCL system has acknowledged an overload on your crane, you must carry out specified inspections on the crane.

These inspections apply only to overloads up to 50%. For overloads of 50% or higher, crane operation must be stopped immediately and Crane Care must be contacted for corrective action.

The following illustrations may not be an exact representation of your crane and are to be used for reference only.

WARNING

Overload Hazard!

To avoid an accident caused by overload damage to your crane:

- Perform the inspections outlined in this publication for overloads up to 50%.
- Stop operating the crane and contact Manitowoc Crane Care immediately for overloads of 50% and higher.

NOTE: If your crane is equipped with CraneSTAR, an overload warning will be posted to the web site for review by the crane owner.

Overload warnings do NOT indicate real time events! Warnings could be sent 24 hours (or more) after the actual event.

Reference Only

Boom Inspection

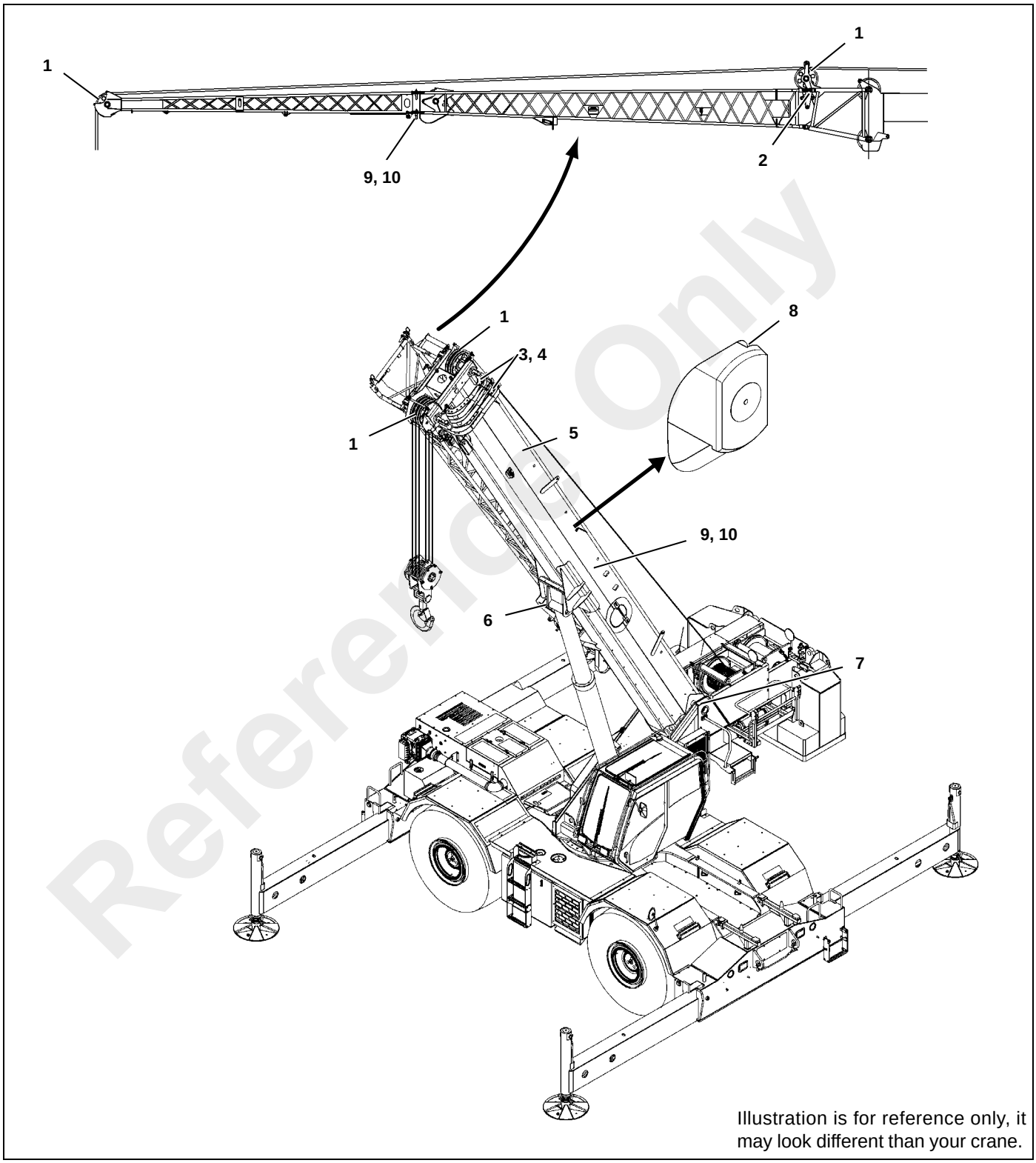

Illustration is for reference only, it may look different than your crane.

Reference Only

Overload less than 25%			
1	Sheaves	Inspect all for damage.	
2	Luffing Mechanism/ Cylinder	Inspect for damage/leaks.	
3	Collar-wear pads	Inspect all for damage.	
Overload from 25% to 49%			
1	Sheaves	Inspect all for damage.	
2	Luffing Mechanism/ Cylinder	Inspect for damage/leaks.	
3	Collar-wear pads	Inspect all for damage.	
4	Collar-welds	Inspect all for cracks.	
5	Telescopic Sections	Inspect for bent or twisted sections. Check the boom for straightness.	
6	Lift Cylinder Head Area	Inspect for bends or cracked welds.	
7	Turret-Base Section	Inspect for cracked welds.	
8	Locking Area (Pin Booms)	Inspect for elongated holes.	
9	Welds	Inspect for cracks.	
10	Paint	Inspect for cracked paint which could indicate twisted, stretched, or compressed members.	

Reference Only

Superstructure Inspection

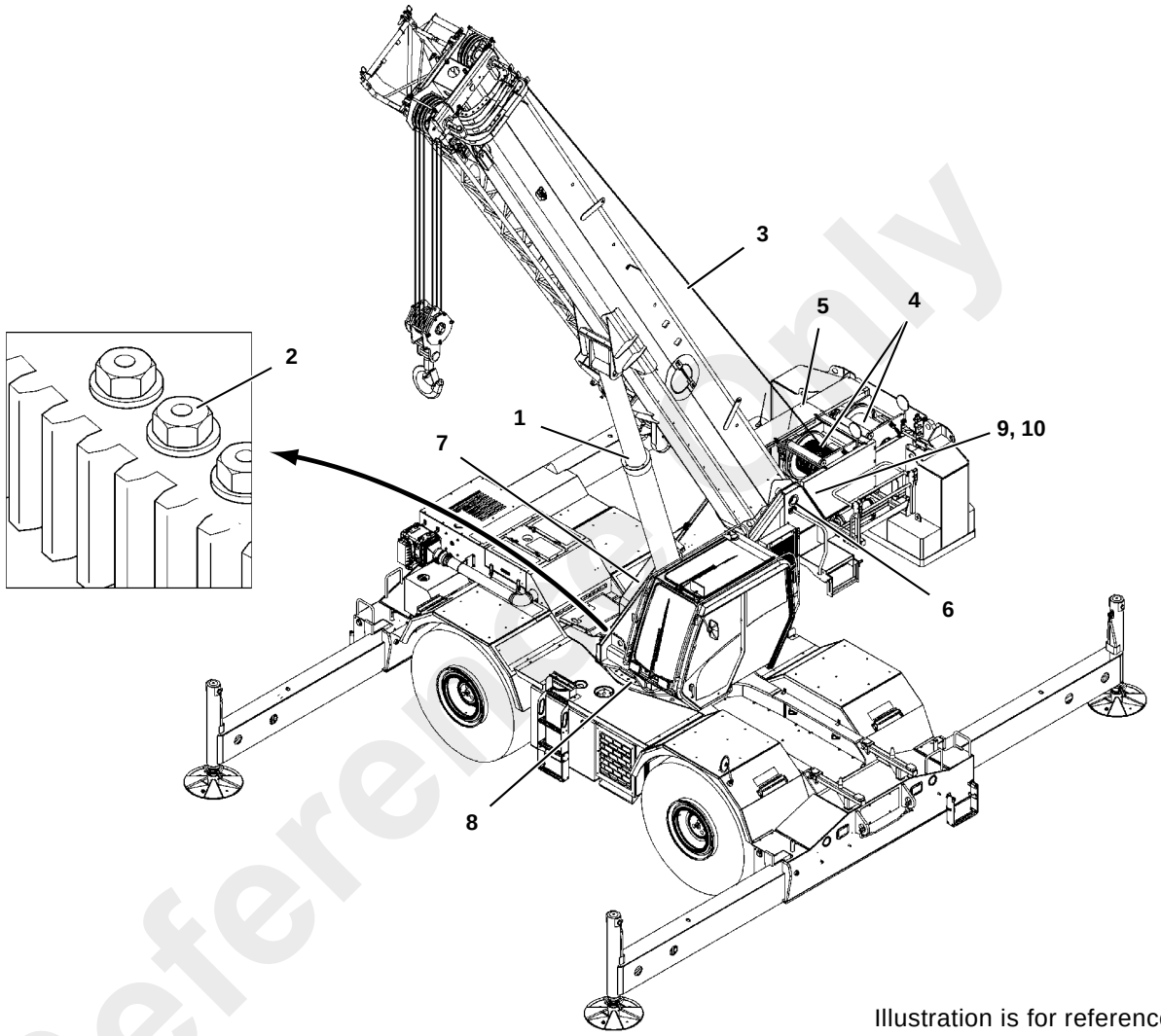

Illustration is for reference only, it may look different than your crane.

Reference Only

Overload less than 25%			
1	Lift Cylinder	Inspect for leaking.	
2	Turntable Bearing	Check bolts for proper torque.	See topic in Swing section of Service Manual.
3	Wire Rope	Inspect all for damage.	See topic in Introduction section of Service Manual.
Overload from 25% to 49%			
1	Lift Cylinder	Inspect for leaking.	
2	Turntable Bearing	Check bolts for proper torque.	See topic in Swing section of Service Manual.
3	Wire Rope	Inspect all for damage.	See topic in Introduction section of Service Manual.
4	Hoist/Drums	Inspect each for damage.	
5	Hoist Brakes	Brakes must hold rated line pull.	
6	Bearing Main Boom Pivot Pin	Inspect for deformation, cracked welds.	
7	Lift Cylinder-lower mount	Inspect pin and welds.	
8	Turntable	Inspect for deformation, cracked welds.	
9	Welds	Inspect for cracks.	
10	Paint	Inspect for cracked paint which could indicate twisted, stretched, or compressed members.	

Reference Only

Carrier Inspection

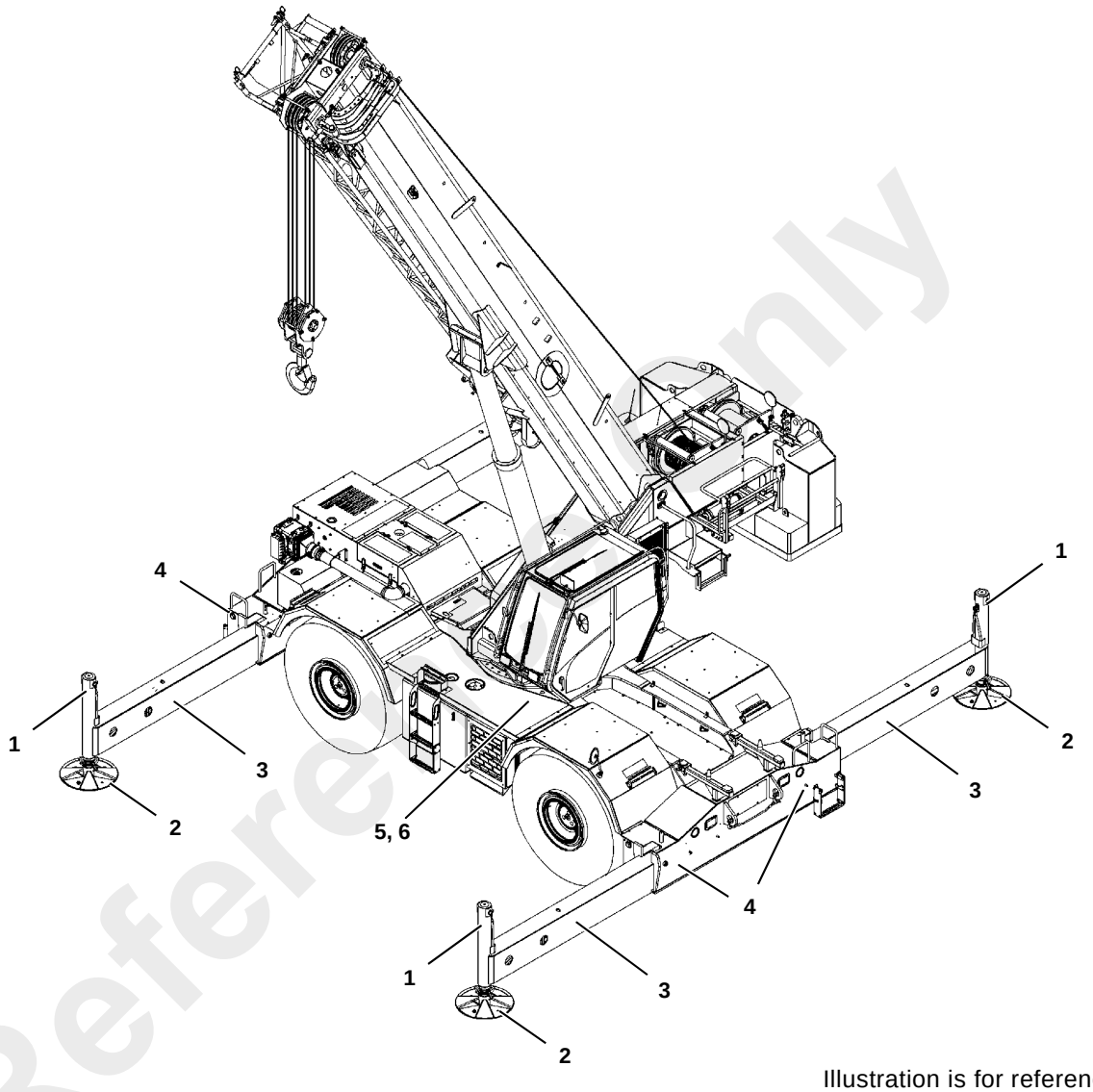

Illustration is for reference only, it may look different than your crane.

Reference Only

Overload less than 25%			
1	Jack Cylinders	Inspect for leaking.	
2	Outrigger Pads	Inspect for deformation and cracked welds.	
Overload from 25% to 49%			
1	Jack Cylinders	Inspect for leaking.	
2	Outrigger Pads	Inspect for deformation and cracked welds.	
3	Outrigger Beams	Inspect for deformation and cracked welds.	
4	Outrigger Boxes	Inspect for deformation and cracked welds.	
5	Welds	Inspect for cracks.	
6	Paint	Inspect for cracked paint which could indicate twisted, stretched, or compressed members.	

Reference Only

SECTION 3
OPERATING CONTROLS AND PROCEDURES

SECTION CONTENTS

Controls and Indicators 3-2
Steering Column 3-3
Turn Signal Lever and Windshield Wiper/Washer/ Headlight /Horn Controls. 3-3
Steering Column Adjustment Lever 3-3
Park Brake Control Switch 3-3
Headlights Switch 3-3
Drive Axle Selector Switch 3-3
Hazard Lights Switch 3-3
Engine Diagnostic and Engine Speed Control Switches 3-4
Ignition Switch. 3-4
Transmission Shift Lever 3-4
Cab Overhead Controls 3-5
Skylight Window Latch 3-5
Skylight Wiper. 3-5
Skylight Sunscreen 3-5
Dome Light 3-5
Cab Circulating Fan 3-5
Right Side Window Latch 3-5
Overhead Control Panel. 3-6
Heater/Air Conditioner Fan Switch 3-6
Heater Control Switch. 3-6
Air Conditioner Switch. 3-6
Skylight Wiper Switch 3-6
Panel Dimmer Switch 3-6
Work Lights Switch 3-6
Boom Lights Switch (Optional) 3-7
Crane Function Power Switch. 3-7
Hoist Rotation Indicator Display 3-7
Exhaust System Cleaning Switch 3-7
Boom Section 1/Section 2 Selector Switch and Indicator 3-7
Boom Manual/Automatic Mode Selector Switch and Indicator 3-8
Boom A/B Mode Selector Switch and Indicator . . 3-8
Boom Recovery Mode Switch and Indicator. 3-8
Steering Column Indicator and Gauge Display . . 3-9
Swing Brake Engaged 3-10
Parking Brake Engaged 3-10
Light Malfunction. 3-10
Emergency Stop 3-10
Hydraulic Oil High Temperature 3-10
Transmission Warning 3-10
Low Steer Pressure (Optional on CE Units) 3-10
Left Turn Signal Indicator. 3-10
Low Brake Pressure 3-10
Electronic Module Indicator 3-10
Electronic System Diagnostic 3-10
LCD Display. 3-11
Engine Stop 3-11
Engine Warning 3-11
Exhaust System Cleaning Indicator. 3-11
Right Turn Signal Indicator 3-12
Inhibit Exhaust System Cleaning Indicator 3-12
Diesel Exhaust Fluid Indicator 3-12
High Exhaust System Temperature Indicator . . . 3-12
Engine Wait-to-Start Indicator 3-12
Four-Wheel Drive Engaged Indicator 3-12
Axle Differential Locked Indicator 3-12
Rear Wheels Not Centered Indicator. 3-12
Engine Coolant Temperature Gauge. 3-12
Fuel Gauge 3-12
Low Fuel Level Indicator 3-13
Battery Charge Indicator 3-13
Voltmeter 3-13
Tachometer 3-13
DEF Tank Level/Gauge 3-13
Control Seat Assembly (Single Axis) 3-14
Main Hoist Joystick (Single Axis). 3-14
Boom Lift Joystick (Single Axis). 3-14
Boom Lift and Main Hoist Joystick (Dual Axis Option) 3-14
Main Hoist Speed Selector Switch. 3-14
Telescope or Auxiliary Hoist Joystick (Single Axis). 3-15
Swing Joystick (Single Axis) 3-15
Swing and Telescope or Swing and Auxiliary Hoist Joystick (Dual Axis Option) 3-15
Auxiliary Hoist Speed Selector Switch (Optional) 3-15
Rear Steer Switch 3-15
Swing Brake Control Switch 3-15
Axle Differential Lock Control Switch (Optional) . 3-16
Cab Door Release 3-16
Seat Back Adjustment 3-16
A/C Heater, Climate Control 3-16
Seat Slide Lever 3-16
Seat Frame Slide Lever. 3-16

Reference Only

Armrest Adjustment 3-16
Hoist Rotation Indicators 3-16
HRI Display 3-16
Hydraulic Boost Switch 3-16
Armrest Switch 3-16
Seat Switch 3-16
Side Control Panel 3-17
Rated Capacity Limiter (RCL) and Work Area Definition System (WADS) Control Panel 3-17
Rated Capacity Limiter (RCL) Bypass Switch . . . 3-17
Emergency Stop Switch 3-17
Transmission Oil Temperature Gauge 3-17
Turntable Pin Swing Lock Control 3-17
12V Receptacle 3-18
Diagnostic Connector 3-18
Bubble Level Indicator 3-18
Hoist Third Wrap Indicator (Optional—Standard on CE) 3-18
Cold Weather Indicator (Optional) 3-18
Ambient Temperature LED Indicator 3-18
Boom Not Synchronized Indicator 3-18
Outrigger Control 3-18
Foot Pedal Controls 3-19
360° Swing Lock Pedal 3-19
Swing Brake Pedal 3-19
Telescope Control Foot Pedal (Optional) 3-19
Service Brake Foot Pedal 3-19
Foot Throttle Pedal 3-19
Miscellaneous Controls and Indicators 3-20
Fuse Panel 3-20
Buzzer 3-20
Rated Capacity Limiter (RCL) Emergency Override Switch (Non-CE Certified Cranes) 3-20
Rated Capacity Limiter (RCL) Emergency Override Switch and Indicator (CE Certified Cranes) 3-20
RCL Internal Light Bar (Optional) 3-21
Strobe Light or Beacon (Optional) 3-21
Backup Alarm 3-21
Emergency Exit 3-21
Operating Procedures 3-21
Pre-Starting Checks 3-21
Cold Weather Operation 3-22
Crane Warm-up Procedures 3-24
Engine 3-24
Transmission 3-25
Hoist 3-25
Swing Drive and Turntable Bearing 3-25
Axles 3-25
Hydraulic Oil System 3-25
Engine Operation 3-26
Transporting the Crane 3-27
Crane Travel Operation 3-27
General Crane Operation 3-35
Stowing and Parking 3-41
Unattended Crane 3-41

Reference Only

CONTROLS AND INDICATORS

The engine is electronically controlled by the Electronic Control Module (ECM); it is the control center of the entire engine system. The ECM processes all inputs and sends commands to the fuel systems as well as vehicle and engine control devices. This Operator Manual does not include information on the engine ECM. A separate manual by the engine manufacturer is shipped with the crane at the factory.

All controls and indicators to operate and monitor crane functions are found inside the crane cab Figure 3-1 and include the following:

1. Foot Pedals
2. Outrigger Control
3. Seat Joystick and Armrest Controls
4. Side Display Panel
5. Steering Column
6. Overhead Control Panels

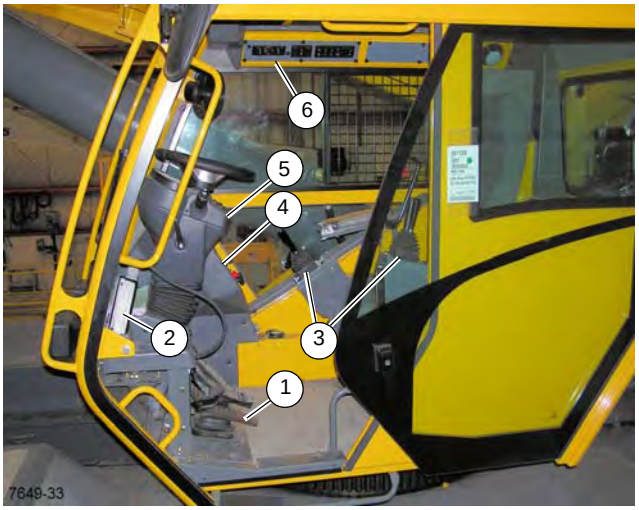

FIGURE 3-1

STEERING COLUMN

The steering column assembly in Figure 3-2 is a pedestal style tilt and telescoping steering column. It has the ability to tilt forward 30° or be raised vertically approximately 2.5 inches. It also includes the ignition switch and the CAN bus gauge display (11) (Figure 3-2).

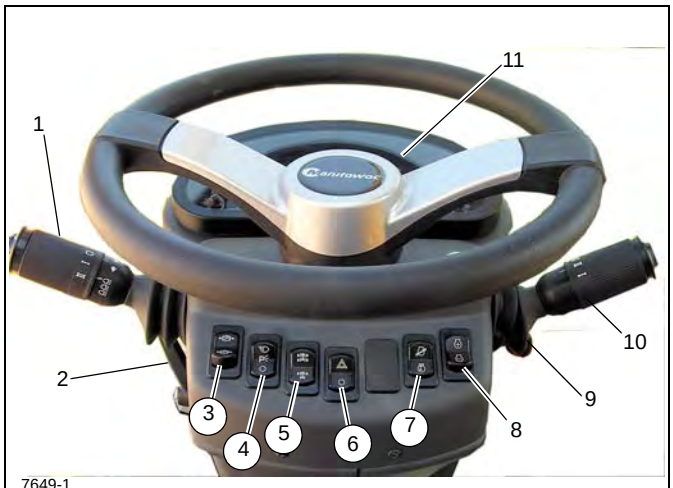

FIGURE 3-2

Figure 3-2 Item Numbers

Item	Description
1	Turn Signal Lever and Windshield Wiper/ Washer/Headlight /Horn Controls
2	Steering Column Tilt Lever
3	Park Brake Control Switch
4	Headlights Switch
5	Drive Axle Selector Switch
6	Hazard Lights Switch
7	Engine Diagnostic/Speed Control Switch
8	Increment/Decrement Switch
9	Ignition Switch
10	Transmission Shift Lever
11	Gauge Display

Turn Signal Lever and Windshield Wiper/ Washer/Headlight /Horn Controls

The Turn Signal Lever and Windshield Wiper/Washer Controls (1) (Figure 3-2) are located on the left side of the steering column. Pushing the turn signal lever down causes the left front and left rear turn signals to flash. Pushing the turn signal lever up causes the right front and right rear turn signals to flash.

The windshield wiper switch is incorporated in the turn signal lever. The knob of the lever has three positions: O, I, and II. Pushing the ring button in the end of the knob energizes the windshield washer pump to spray washer fluid on the windshield. Positioning the knob to I operates the wiper at low speed and positioning the knob to II operates the wiper at high speed. Positioning the knob to O turns the wiper motor off and automatically returns the wiper to the parked position.

Pushing the small button on the end of the lever sounds the horn.

Steering Column Adjustment Lever

The steering control column can be rotated forward approximately 30° and raised approximately 2.5 inches. Rotate the steering column adjustment lever (2) (Figure 3-2) counterclockwise to release the steering column for adjustments; rotate the steering column adjustment lever (2) (Figure 3-2) clockwise to lock the steering column in place.

Park Brake Control Switch

The Park Brake Control Switch (3) (Figure 3-2) is located on the front of the steering column. This two-position rocker switch (ON/OFF) is used to apply and release the parking brake on the drive line. The red Park Brake Indicator light on the steering column is illuminated when the pressure switch in the brake release system is activated and the brake is applied.

Headlights Switch

The Headlights Switch (4) (Figure 3-2) is located on the front of the steering column. This three-position rocker switch (OFF/PARK/HEADLIGHT) controls operation of the instrument lights, switch LED's, and the marker lights on the front, rear, and side of the crane. When the switch is in the ON position, the steering column and switch lights are illuminated.

Drive Axle Selector Switch

The Drive Axle Selector Switch (5) (Figure 3-2) is located on the front of the steering column. This two-position rocker switch is labeled two-wheel drive (high range) and four-wheel drive (low range). The switch controls a solenoid valve (energized for two-wheel drive) that operates the speed range and axle disconnect cylinders on the transmission. When the switch is in the four-wheel drive position, the Drive Axle Indicator light on the steering column is illuminated.

Hazard Lights Switch

The Hazard Lights Switch (6) (Figure 3-2) is located on the front of the steering column. The switch is a two-position rocker switch (ON/OFF) that causes the four turn signal lights to flash at the same time when the switch is positioned to ON. When the switch is positioned to ON, the turn signal indicator lights on the steering column will flash.

Reference Only

Engine Diagnostic and Engine Speed Control Switches

Two engine diagnostic and speed control switches (Engine Diagnostic/Speed Control and Increment/Decrement) are located on the front of the steering column.

Engine Diagnostic/Speed Control Switch

The Engine Diagnostic/Speed Control Switch (7) (Figure 3-2) is a two position maintained ON/OFF rocker switch used to access the engine fault codes or enable the control of the low engine idle and engine RPM functions.

Diagnostic function — With the Ignition Switch in the RUN position and the engine off, press the top of the Engine Diagnostic/Speed Control Switch to view the engine fault codes on the steering column display. If there is more than one active engine fault code, use the Increment/Decrement Switch (8) (Figure 3-2) to toggle forward and backward through the fault codes. If there are no engine fault codes, zeros will be shown in the steering column display.

Engine low idle function — With the engine running and the top of the Engine Diagnostic/Speed Control Switch pressed, the engine low idle is adjusted using the Increment/ Decrement Switch (8) (Figure 3-2).

Engine RPM function — With the engine running and the bottom of the Engine Diagnostic/Speed Control Switch pressed, the engine RPM is adjusted using the Increment/ Decrement Switch (8) (Figure 3-2).

Increment/Decrement Switch

The Increment/Decrement Switch (8) (Figure 3-2) is a three position momentary rocker switch with center maintained position being off. Use this switch to toggle backward and forward through active engine fault codes or adjust engine speed.

Diagnostic function — With the Ignition Switch in the RUN position, the engine off, and the top of the Engine Diagnostic/ Speed Control Switch (7) (Figure 3-2) pressed, press the top or bottom of the Increment/Decrement Switch to toggle forward and backward through the engine fault codes shown on the steering column display. If there are no engine fault codes, zeroed will be shown in the steering column display.

Engine low idle function — With the engine running and the top of the Engine Diagnostic/Speed Control Switch (7) (Figure 3-2) pressed, press the top or bottom of the Increment/Decrement Switch to increase or decrease the low engine idle.

Engine RPM function — With the engine running and the bottom of the Engine Diagnostic/Speed Control Switch (7) (Figure 3-2) pressed, the Increment/Decrement Switch is used to adjust engine RPM. Quickly press the top of the switch once to go to full engine RPM; quickly press the bottom of the switch once to return to low engine idle. If the engine speed is below the maximum RPM setting, pressing and holding the top of the switch will cause the engine RPM to slowly increase; release the switch when the desired RPM is attained. If the engine speed is above the minimum RPM setting, pressing and holding the bottom of the switch will cause the engine RPM to slowly decrease; release the switch when the desired RPM is attained.

Ignition Switch

The Ignition Switch (9) is located on the right side of the steering column and under the transmission shift lever(10).

The switch is key-operated and has four positions: ACC [3], OFF [0], RUN [1], and START [2]. In the OFF position, all electrical power is off except for the lights controlled by the Headlights Switch, turn/hazard/stop lights, dome light and work light. Positioning the switch to ACC energizes all electrical components except for the start solenoid and engine ECM. Positioning the switch to RUN is the same as ACC, but the ignition circuit is also energized. Positioning the switch to START energizes the start relay, which in turn energizes the cranking motor solenoid and cranks the engine for starting. The switch is spring returned from START to RUN. To shut down the engine, position the switch to OFF.

The Ignition switch has a mechanical anti-restart built into it. If the engine does not start after the first attempt, the key switch must go to the OFF position and then back to START in order to try and start the engine another time.

Transmission Shift Lever

CAUTION

Transmission Damage!

To prevent transmission damage: shift between two-wheel and four-wheel drive only with the crane stopped with the transmission in neutral or park.

The Transmission Shift Lever (10) (Figure 3-2) is located on the right side of the steering column. The control lever operates the transmission selector valve electrically. Positioning the lever up actuates forward and positioning the lever down actuates reverse. When the lever is in neutral, it rests in a detent. To move the lever up or down, pull back on the lever first. To shift the transmission to first, second, or third gear, rotate the knob to 1, 2, or 3.

The transmission has six forward gears and six reverse gears. To use the three low gears, put the Drive Axle Switch at 4WD LO. To use the three high gears, put the Drive Axle Switch at 2WD HI.

Reference Only

CAB OVERHEAD CONTROLS

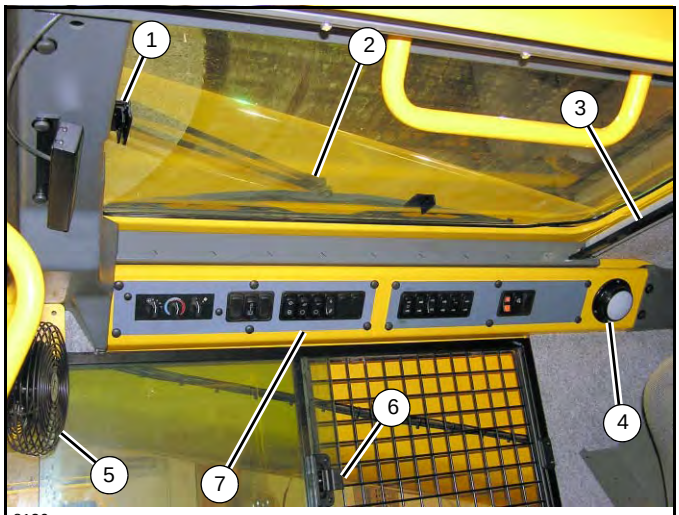

8126

FIGURE 3-3

Item	Description
1	Skylight Window Latch
2	Skylight Wiper
3	Skylight Sunscreen
4	Dome Light
5	Cab Circulating Fan
6	Window Latch
7	Overhead Control Panel

Skylight Window Latch

The Skylight Window Latch (1, (Figure 3-3)) is at the front of the window. Squeeze the latch and slide the window to the rear to open. To close slide the window forward until the latch engages.

Skylight Wiper

The Skylight Wiper (2, Figure 3-3) is controlled by the Skylight Wiper Switch, (4, Figure 3-4), and operated by the Wiper Motor.

Skylight Sunscreen

The Skylight Sunscreen (3, Figure 3-3) is used to diminish direct sunlight. The sunscreen is self retracting and can be set to screen all the light or adjusted reward by moving it into the notches provided.

Dome Light

The Cab Dome Light (4, Figure 3-3) is on the right rear corner of the cab overhead console and provides illumination in the cab. The dome light is controlled by a switch on the light.

Cab Circulating Fan

The Cab Circulating Fan (5, Figure 3-3) is located on the left front side of the cab, above the window frame. A swivel allows the fan to be rotated and a switch on the fan base controls the fan. The switch has a high, low and off positions.

Right Side Window Latch

The window on the right side of the cab can be opened. Squeeze latch (6, Figure 3-3) to release the window and slide forward. To close slide the window rearward until the latch engages.

Reference Only

OVERHEAD CONTROL PANEL

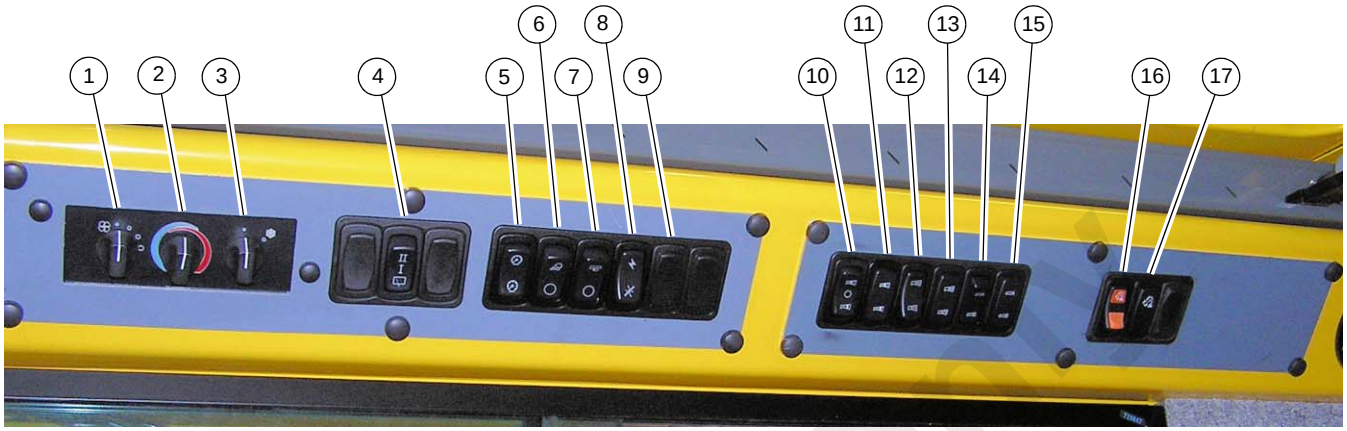

8126-1

FIGURE 3-4

Figure 3-4 Item Numbers

Item	Description
1	Heater/Air Conditioner Fan Switch
2	Heater Control Switch
3	Air Conditioning Switch
4	Skylight Wiper Switch
5	Panel Dimmer Switch
6	Work Lights Switch
7	Boom Light Switch (Optional)
8	Crane Function Power Switch
9	Exhaust System Cleaning Switch (Tier 4 engine only)
10	Boom Section 1/Section 2 Selector Switch
11	Boom Section 1/Section 2 Indicator
12	Boom Manual/Automatic Mode Selector Switch
13	Boom Manual/Automatic Mode Indicator
14	Boom A/B Mode Selector Switch
15	Boom A/B Mode Indicator
16	Recovery Mode Switch
17	Recovery Mode Indicator

Heater/Air Conditioner Fan Switch

The Heater/Air Conditioner Fan Switch (1, Figure 3-4) controls the cab fan's speed. Fan speed controls the volume of heated air output (or cooled air output) of the fan. Settings are OFF, LOW speed, MEDIUM speed, and HIGH speed.

Heater Control Switch

The Heater Control Switch (2, Figure 3-4) controls intensity of heating temperature. Turn the switch to the right (clockwise) to open the valve for heat. (Heat comes from heated fluid going through the heater coil.) Turn the switch to the left (counterclockwise) to close the valve to stop fluid flow and minimize heat.

Air Conditioner Switch

The Air Conditioning Switch (3, Figure 3-4) controls the operation of the optional air conditioning system. Settings are off (O) and on (I).

Skylight Wiper Switch

The electrically-operated Skylight Wiper is installed to remove moisture from the skylight. The Skylight Wiper is controlled by the Skylight Wiper Switch (4, Figure 3-4). This is a 3 position switch OFF/LOW speed/HIGH speed.

Panel Dimmer Switch

The Panel Dimmer Switch (5, Figure 3-4) controls the lighting for the overhead heater/air conditioning controls and the Transmission Oil Temperature Gauge (7, Figure 3-10), push the switch to increase or decrease the panel lighting.

Work Lights Switch

The Work Lights Switch (6, Figure 3-4) controls the crane's work lights mounted on the bottom front of the superstructure cab. Press the top of the switch to turn on the work lights. Press the bottom of the switch to turn off the work lights.

Reference Only

Boom Lights Switch (Optional)

The Boom Lights Switch (7) (Figure 3-4) is located on the side display panel. This two-position rocker switch (ON/OFF) controls operation of the boom flood lights. Press the top of the switch to turn on the boom lights, press the bottom of the switch to turn the lights off.

Crane Function Power Switch

The Crane Function Power Switch (8) (Figure 3-4) is located on the side display panel. This two-position (ON/OFF) rocker switch permits the operator to disconnect power from the crane functions controlled by the hydraulic remote controllers on the armrests. Positioning the switch to OFF prevents inadvertent operation of functions due to bumping the controllers while roading or any other operation.

Hoist Rotation Indicator Display

The display is located in the front overhead panel Figure 3-9.

Refer to *Hoist Rotation Indicator Display*, page 3-7 for more information.

Exhaust System Cleaning Switch

WARNING

Fire or Burn Hazard!

During the cleaning process the exhaust becomes very hot. Do not park the vehicle near flammable objects.

Use caution near the exhaust tailpipe during cleaning as it will become very hot.

The Engine Exhaust System Cleaning Switch (9) (Figure 3-4) is located on the right side of the overhead control panel. This switch is a three position switch, INHIBIT Cleaning/PERMIT Cleaning/START Cleaning. Press this switch to start exhaust system cleaning or to disable exhaust system cleaning:

- Start Cleaning (7649-10)
- Inhibit Cleaning (7649-11)

To manually clean, set the crane parking brake, the crane transmission must be in neutral and have all pedals released.

Set up a safe area around the crane's exhaust; remove tools, rags, grease or any debris from the engine exhaust area. As a warning, the light (1, Figure 3-5) below the exhaust pipe (2, Figure 3-5) will flash during system cleaning.

With the engine idling push the Exhaust System Cleaning Switch (9) to initiate cleaning.

Within 5 seconds the engine should rev up to 1000 to 1400 rpm. The engine will continue to run at this speed for up to 45 minutes.

Pressing the brake or throttle pedal during cleaning or activating the Inhibit Exhaust System Cleaning Switch will interrupt the cleaning process.

Make sure the crane and surrounding area are monitored during manual cleaning. If any unsafe condition occurs, shut off the engine immediately.

During this period the sound of the engine may change. When cleaning is complete the engine will return to its normal idle speed.

FIGURE 3-5

Boom Section 1/Section 2 Selector Switch and Indicator

The Boom Section 1/Section 2 Selector Switch (10) (Figure 3-4) and Indicator (11) are located on the overhead control panel. The switch (10) is a three position rocker type switch that is used in conjunction with the Boom Manual/ Automatic Mode Selector Switch (12).

When the Boom Manual/Automatic Mode Selector Switch (12) is positioned to manual mode, the Boom Section 1/ Section 2 Selector Switch (10) is used to select the section(s) of the boom that will telescope in and out when actuated. When the switch (10) is positioned to Section 2 (top of switch is pressed), sections 2, 3, and 4 can be extended and retracted; when the switch is positioned to Section 1 (bottom of switch is pressed), section 1 can be extended and retracted. When not operating in the manual mode, the Boom Section 1/Section 2 Selector Switch (10) should be in the OFF (center) position.

Reference Only

When operating in the manual mode, the Boom Section 1/ Section 2 Indicator (11) (Figure 3-4) will indicate which boom section has been activated by the Boom Section 1/Section 2 Selector Switch (10).

Boom Manual/Automatic Mode Selector Switch and Indicator

The Boom Manual/Automatic Mode Selector Switch (12) (Figure 3-4) and Indicator (13) are located on the overhead control panel. The switch (12) is a two-position rocker type switch labeled AUTO (Automatic) and MAN (Manual).

Normal crane operation is performed with the Boom Manual/ Automatic Mode Selector Switch (12) positioned to the Auto Mode (bottom of switch is pressed), which causes the boom sections, when actuated, to extend and retract in a predetermined sequence based on the position of the Boom A/B Mode Selector Switch (14) (Figure 3-4). When the Boom Manual/Automatic Mode Selector Switch (12) is positioned to Auto Mode, the Boom Manual/Automatic Mode Indicator will indicate Auto Mode.

When the Boom Manual/Automatic Selector Switch (12) is positioned to Manual Mode (top of switch is pressed), the Boom Manual/Automatic Mode Indicator (13) will indicate Manual Mode and the operator can control the sequence in which the boom sections extend and retract by way of the Boom Section 1/Section 2 Selector Switch (10). This manual mode of operation is necessary when servicing the boom and for the subsequent boom re-synchronization that is needed to return the control system from the Manual mode to the Automatic mode. Also, during Automatic mode operation, if the rated capacity limiter (RCL) determines that the boom is not synchronized, manual control of the boom sections is again needed for boom/control system re-synchronization.

Boom A/B Mode Selector Switch and Indicator

The Boom A/B Mode Selector Switch (14) (Figure 3-4) and Indicator (15) are located on the overhead control panel. The switch (14) is a two position rocker type switch that is used to change the sequence in which the boom sections extend and retract when operating in the Automatic mode.

With the Boom Manual/Automatic Mode Selector Switch (12) (Figure 3-4) positioned to automatic mode and the Boom A/B Mode Selector Switch (14) positioned to A mode (top of switch is pressed), the boom control system, when extending the boom, will fully extend Sections 2, 3, and 4 before extending Section 1; and when retracting the boom, the control system will fully retract Section 1 before retracting Sections 2, 3, 4. Conversely, when the Boom A/B Mode Selector Switch is positioned to B mode, the boom control system, when extending the boom, will fully extend Section 1 before extending Sections 2, 3, and 4; and when retracting the boom, the control system will fully retract Sections 2, 3, 4 before retracting Section 1.

Switching between A and B modes can only be done when the boom sections are fully retracted or fully extended. Changing modes in any other boom configuration will cause the RCL to lockout the boom telescope functions and turn on the Boom Not Synchronized Indicator.

The Boom A/B Mode Indicator (15) is labeled A and B and consists of two LEDs; one for A mode and one for B mode. Dependent upon which position the Boom A/B Mode Selector Switch is in, the respective LED will illuminate.

Boom Recovery Mode Switch and Indicator

The Boom Recovery Mode Switch (16) (Figure 3-4) and Indicator (17) are located on the overhead control panel. The switch (16) is a two position rocker type switch that has an integral lock to prevent accidental activation. The Recovery Mode Switch overrides the boom control system and allows the boom to be recovered (retracted) in the event the boom telescope function stops working due to a sensor failure or loss of communication with the rated capacity limiter (RCL). The indicator (17) will flash if a failure occurs. Refer to *Retracting the Boom Using the Boom Recovery Mode*, page 3-39 to recover the boom if there is a failure in the boom control system.

Reference Only

STEERING COLUMN INDICATOR AND GAUGE DISPLAY

As a system check, the indicators will come on for two seconds when the Ignition Switch is turned to the RUN position.

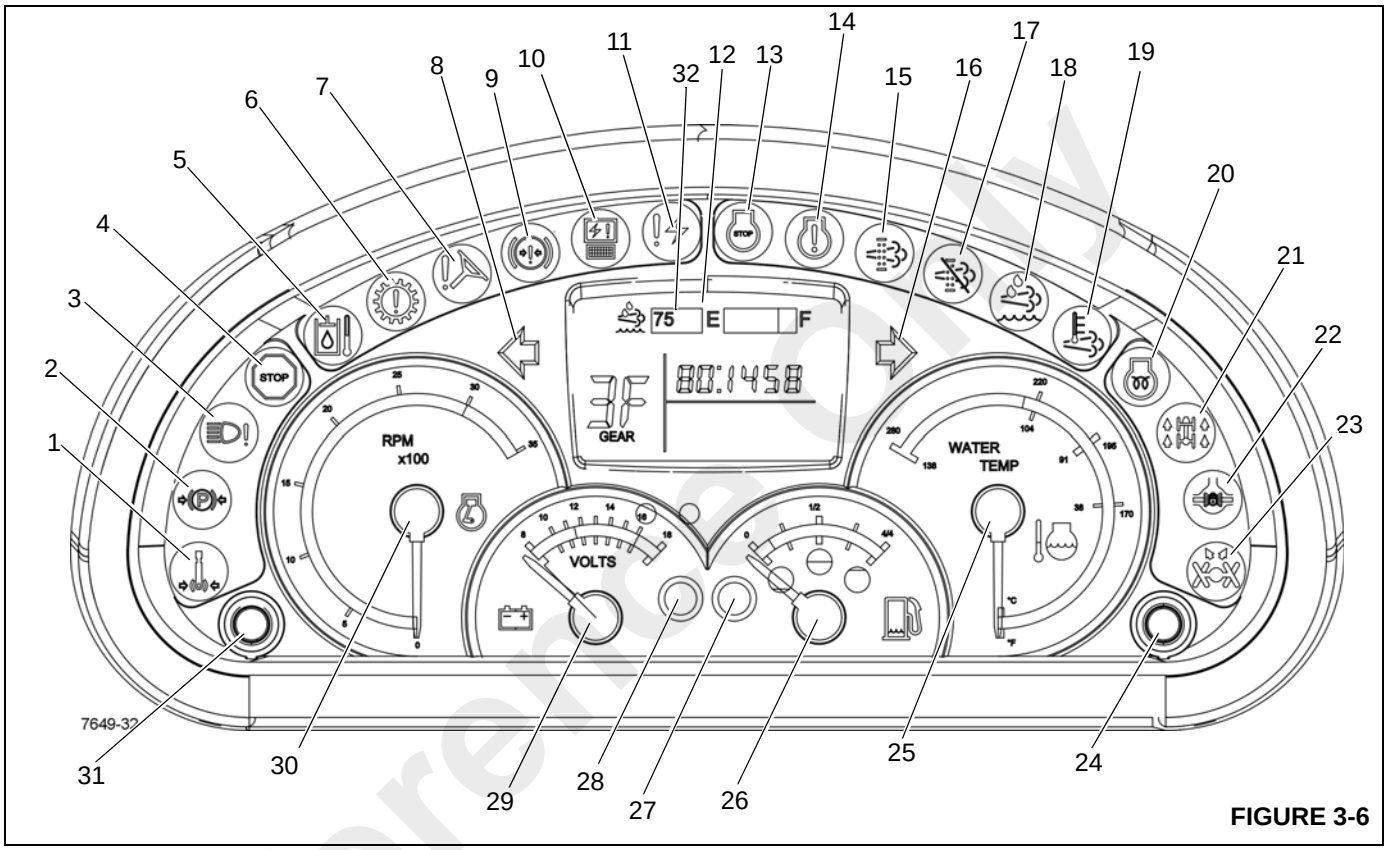

FIGURE 3-6

Figure 3-6 Item Numbers

Item	Description
1	Swing Brake Engaged
2	Parking Brake Engaged
3	Light Malfunction
4	Emergency Stop
5	Hydraulic Oil High Temperature
6	Transmission Warning
7	Low Steer Pressure
8	Left Turn Signal
9	Low Brake Pressure
10	Electronic Module Control
11	Electrical System Diagnostics
12	LCD Display
13	Engine Stop

Item	Description
14	Engine Warning
15	Exhaust System Cleaning Required
16	Right Turn Signal
17	Inhibit Cleaning
18	DEF Indicator
19	High Exhaust System Temperature
20	Engine Wait to Start
21	Four-Wheel Drive Engaged
22	Axle Differential Locked
23	Rear Wheels Not Centered
24	Push Button Switch (not used)
25	Engine Coolant Temperature Gauge
26	Fuel Gauge
27	Low Fuel Level Indicator

Reference Only

Item	Description
28	Battery Charge Indicator
29	Voltmeter
30	Tachometer
31	Push Button Switch (not used)
32	DEF Level/Gauge

Swing Brake Engaged

The Swing Brake Engaged Indicator (1) (Figure 3-6) is located in the steering column gauge display. It illuminates red when the Turntable Swing Motor Swing Brake is engaged preventing the rotation of the crane superstructure.

Parking Brake Engaged

The Parking Brake Engaged Indicator (2) (Figure 3-6) is located in the steering column gauge display. It illuminates red when the crane parking brake is engaged.

Light Malfunction

The Light Malfunction Indicator (3) (Figure 3-6) is located in the steering column gauge display. It illuminates amber when the crane headlights are malfunctioning.

Emergency Stop

The Emergency Stop Indicator (4) (Figure 3-6) is located in the steering column gauge display. It illuminates red when the Emergency Stop Switch is pushed in (refer to *Emergency Stop Switch*, page 3-17) and a warning buzzer will sound.

Hydraulic Oil High Temperature

The Hydraulic Oil High Temperature Indicator (5) (Figure 3-6) is located in the steering column gauge display. It illuminates red when the hydraulic oil temperature exceeds 93°C (200°F); a warning buzzer will also sound. When this indicator illuminates, set down the load as soon as possible, turn off the engine and try to find the cause of the high hydraulic oil temperature.

Transmission Warning

The Transmission Warning Indicator (6) (Figure 3-6) is located in the steering column gauge display. It illuminates red during high transmission oil temperature conditions. A warning buzzer will also sound.

Low Steer Pressure (Optional on CE Units)

The Low Steer Pressure Indicator (7) (Figure 3-6) is located in the steering column gauge display. It illuminates red when the hydraulic pressure is low. A warning buzzer will also sound.

Left Turn Signal Indicator

The Left Turn Signal Indicator (8) (Figure 3-6) is located in the steering column gauge display. It is a green arrow light that flashes when the turn signal lever is pushed down or the HAZARD light switch is positioned to ON.

Low Brake Pressure

The Low Brake Pressure Indicator (9) (Figure 3-6) is located in the steering column gauge display. It illuminates red when the pressure in the dual accumulator charge valve falls below normal operating requirements. A warning buzzer will also sound.

Electronic Module Indicator

The Electronic Module Indicator (10) (Figure 3-6) is located in the steering column gauge display. If any of electronic modules are off-line and not communicating with the system, the indicator illuminates red.

Electronic System Diagnostic

The Electronic System Diagnostic Indicator (11) (Figure 3-6) is located in the steering column gauge display. The indicator is a red light used for troubleshooting the CANbus system.

Reference Only

LCD Display

The LCD Display(12) (Figure 3-6) is located in the steering column gauge display. The display shows the transmission gear being used, fault codes, DEF tank level, and master software version.

If an active engine fault code is present, the display will show the code when the Ignition Switch is in the RUN position and the engine is off. The display will show the master software version when the Ignition Switch is in the ACC position.

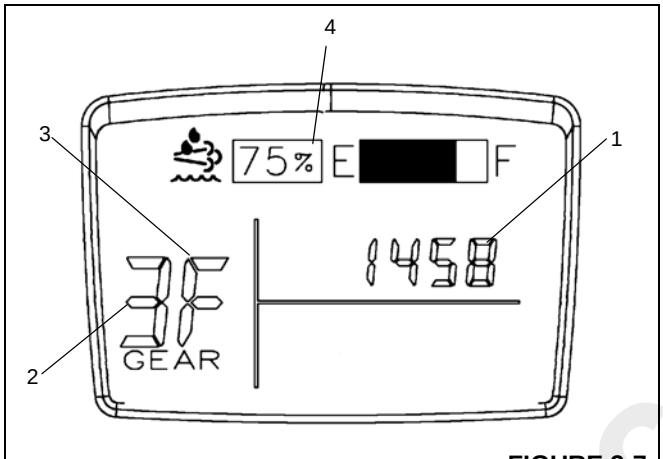

FIGURE 3-7

Figure 3-7 Item Numbers

Item	Description
1	Engine Fault Code, Master Software Version
2	Transmission Gear Selected
3	Forward or Reverse
4	DEF Level/Gauge

Engine Stop

The Engine Stop Indicator (13) (Figure 3-6) is located in the steering column gauge display. It illuminates red when a signal is sent from the engine ECM. In addition, a warning buzzer will also sound.

If this indicator light illuminates, note the fault code, shut the engine off and refer to the Engine Operator Manual.

Engine Warning

The Engine Warning Indicator (14) (Figure 3-6) is located in the steering column gauge display. It illuminates amber when a signal is sent from the engine ECM.

If this indicator light illuminates, note the fault code and see Engine Operator Manual.

The Engine Warning Indicator may also illuminate with the Diesel Oxidation Catalyst Indicator or Diesel Exhaust Fluid Indicator.

Exhaust System Cleaning Indicator

The Exhaust System Cleaning Indicator (15) (Figure 3-6) is located in the steering column gauge display. This indicator illuminates amber when the exhaust system is getting filled with soot and needs to be cleaned out.

When the Exhaust System Cleaning Indicator illuminates or flashes, start cleaning process.

The indicator will be lit continuously during the early stages of clogging. If the system continues to clog, the lamp will begin to flash and slight engine derate will occur.

If even more clogging occurs, the engine warning light (14) will illuminate in addition to the Exhaust System Cleaning Indicator (15) and severe engine derate will occur.

WARNING

Extreme Heat Hazard!

During the cleaning process the exhaust becomes very hot. Do not park the vehicle near objects that are flammable.

Use caution near the exhaust tailpipe as it will also become very hot.

The cleaning process can take place in three different modes:

Passive: the exhaust is hot enough during normal working operation to burn off any hydrocarbon (soot) accumulation

Active: Active self-cleaning occurs when there is not sufficient heat in the exhaust to convert all the hydrocarbon being collected in the exhaust system. Exhaust temperatures are raised by injecting a small amount of fuel. The resulting chemical reaction raises exhaust gas temperatures high enough to oxidize the hydrocarbon from the filter and burn off any accumulation of diesel exhaust fluid from the dosing module. This is all done without any operator intervention.

Manual: Manual or stationary cleaning is the same as active cleaning but takes place while the equipment is not being operated. It offers the equipment operator the option, if needed, of performing cleaning outside the normal duty cycle.

Reference Only

Right Turn Signal Indicator

The Right Turn Signal Indicator (16) (Figure 3-6) is located in the steering column gauge display. It is a green arrow light that flashes when the turn signal lever is pushed up or the Hazard Light switch is positioned to ON.

Inhibit Exhaust System Cleaning Indicator

The Inhibit Exhaust System Cleaning Indicator (17) (Figure 3-6) is located in the steering column gauge display. When the Exhaust System Cleaning Switch (9) (Figure 3-4) is in the inhibit cleaning position, this amber indicator is illuminated and active and manual cleaning is prevented.

Diesel Exhaust Fluid Indicator

The Diesel Exhaust Fluid (DEF) Indicator (18) (Figure 3-6) is located in the steering column gauge display. The indicator has four different stages which will be triggered by the fluid level sensor in the DEF tank:

Low Tank - First warning to the operator is that the reducing agent in the tank is low. The DEF Indicator (18) will be lit continuously.

Derate - The DEF Indicator (18) will start to flash as a warning to the operator that a derate will be activated if the reducing agent in the DEF tank is not refilled.

Low Level Inducement - The DEF Indicator (18) will flash and the engine warning indicator (14) will be lit continuously. Derate will be activated at this stage.

Severe Inducement - Once the DEF (18) tank is empty, the crane operation will be restricted. The DEF Indicator (18) will flash and the Stop Engine Indicator (13) is solid red.

High Exhaust System Temperature Indicator

The High Exhaust System Temperature (HEST) Indicator (19) (Figure 3-6) is located in the steering column gauge display.

During exhaust system cleaning it is possible for the engine exhaust to reach temperatures exceeding 650°C (1200°F). The HEST indicator will illuminate red to warn the operator when temperatures reach 675°C (1247°F) and will stay on until the temperatures falls below 625°C (1157°F).

Warning lights near the tailpipe will flash during cleaning when high exhaust temperatures exist.

For more information on the exhaust system cleaning process, refer to *Exhaust System Cleaning Indicator*, page 3-11

Engine Wait-to-Start Indicator

The Engine Wait-to-Start Indicator (20) (Figure 3-6) is located in the steering column gauge display. It illuminates amber for a period of time when the ignition switch is in the ON position. The engine should not be cranked until the Wait-to-Start light turns off. This light is controlled by the engine ECM.

Four-Wheel Drive Engaged Indicator

The Four-Wheel Drive Indicator (21) (Figure 3-6) is located in the steering column gauge display. It illuminates amber when the Drive Axle Selector Switch (5) (Figure 3-2) is in the four-wheel low position. This indicator will also blink if the crane is shifted between two-wheel high and four-wheel low and the brake pedal is not depressed and the transmission is not in neutral.

Axle Differential Locked Indicator

The Axle Differential Locked Indicator (22) (Figure 3-6) is located in the steering column gauge display. This indicator illuminates amber after the Differential Lock Switch (10) (Figure 3-8) is pressed to the LOCK position and the carrier differential lock switches located on each axle are closed. When in the LOCK position there is no differential action between the wheels.

Rear Wheels Not Centered Indicator

The Rear Wheels Not Centered Indicator (23) (Figure 3-6) is located in the steering column gauge display. The indicator is an amber light that will illuminate any time the rear wheels are not centered.

Engine Coolant Temperature Gauge

The Engine Coolant Temperature (water temp) Gauge (25) (Figure 3-6) is located in the steering column gauge display. The gauge indicates the engine coolant temperature on a dual scale calibrated from 38°C to 138°C and 100°F to 280°F. The gauge receives a signal from the engine ECM and a temperature sending unit in the engine cooling system.

Fuel Gauge

The Fuel Gauge (26) (Figure 3-6) is located in the steering column gauge display. The gauge indicates the quantity of fuel in the fuel tank and has a scale calibrated from empty (0) to full (4/4). The fuel gauge receives a signal from a sending unit in the fuel tank.

CAUTION

Engine Damage!

Ultra low sulfur diesel fuel required in Tier 4 engines.

If “Ultra Low Sulfur” fuel is not used in engines that require it, the Cummins warranty will be void and the engine performance will quickly deteriorate and may stop running.

Reference Only

Low Fuel Level Indicator

The Low Fuel Level Indicator (27) (Figure 3-6) illuminates when the fuel level in the tank is nearing empty (15%). When this indicator comes on fuel should be added to the fuel tank immediately. The light will go out when the fuel tank level reaches 20% of capacity.

Battery Charge Indicator

With the engine running, the Battery Charge Indicator (28) (Figure 3-6) illuminates red if battery system voltage is below nine (9) volts, engine ECM voltage is below nine (9) volts, or there is no alternator charge signal present.

If the engine is running and the Battery Charge Indicator illuminates, investigate possible alternator, alternator fuse, or alternator wiring, or drive belt problems.

When the engine is not running and the Ignition Switch is in the ACC or RUN position, the Battery Charge Indicator turns on to indicate the batteries are being drained and not being charged.

Voltmeter

The Voltmeter (battery gauge) (29) (Figure 3-6) is located in the steering column gauge display. The Voltmeter indicates the voltage being supplied to or from the batteries and has a scale of 8 to 18 volts.

If the Ignition Switch is in the ACC or RUN position and the Voltmeter indicator is in the red, the batteries may need to be recharged or possibly replaced.

Tachometer

The Tachometer (30) (Figure 3-6) is located in the steering column gauge display. The tachometer registers engine RPM and is calibrated in RPM x 100 with a range of zero [0] to 35. The tachometer receives a signal from the engine ECM.

DEF Tank Level/Gauge

The DEF Tank Level/Gauge (32) (Figure 3-6) is located in the steering column gauge display. The DEF Tank Level/Gauge displays the percent of diesel exhaust fluid remaining in the tank along with a bar gauge showing the amount of fluid in the tank.

Reference Only

CONTROL SEAT ASSEMBLY (SINGLE AXIS)

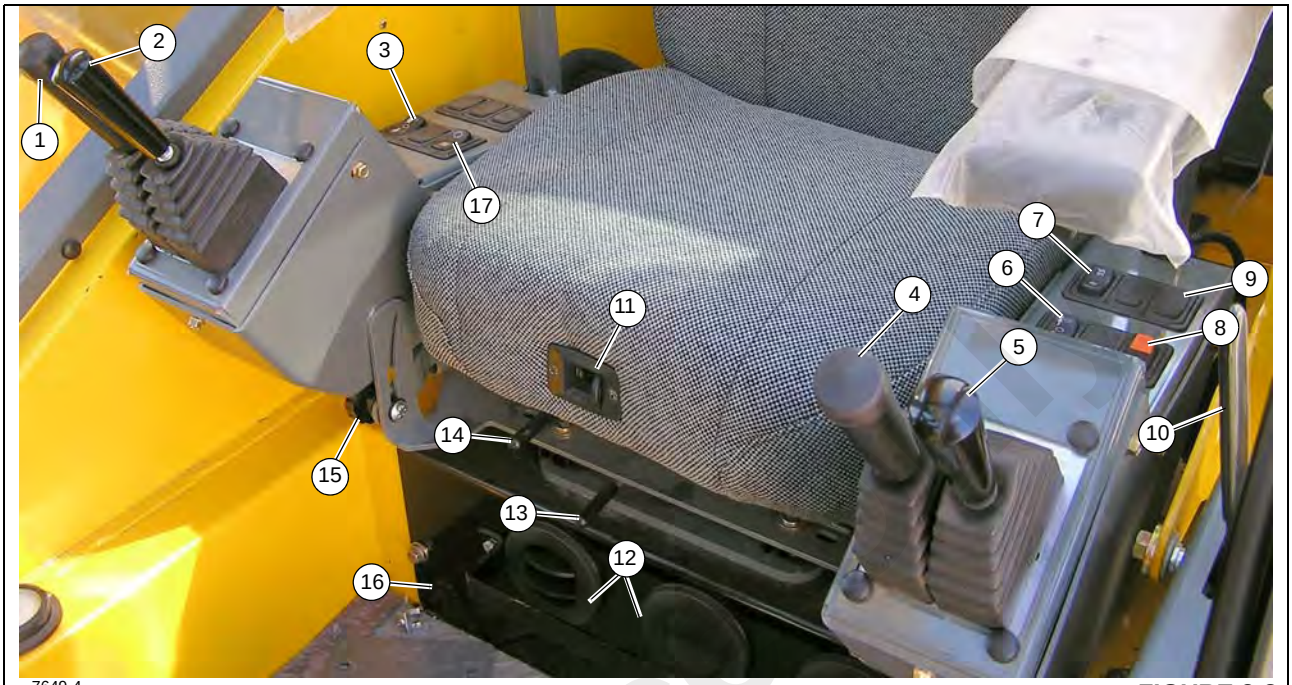

7649-4

FIGURE 3-8

Figure 3-8 Item Numbers

Item	Description
1	Main Hoist Joystick, Raise/ Lower
2	Boom Lift Joystick
3	Main Hoist Speed Switch
4	Boom In/Out (Auxiliary Hoist Raise/Lower)
5	Swing Joystick, Left/Right
6	Auxiliary Hoist Speed Switch
7	Rear Steer Switch
8	Swing Brake Control Switch
9	Axle Differential Lock Control Switch
10	Cab Door Release
11	Seat Back Adjustment
12	AC/Heater Vents
13	Seat Slide Lever
14	Whole Seat Slide Lever
15	Arm Rest Adjustment
16	AC/Heater Climate Control Unit
17	Hydraulic Boost Switch

Main Hoist Joystick (Single Axis)

The Main Hoist Joystick(1) (Figure 3-8) is located on the right armrest. The joystick, when pushed forward, lowers the cable; when pulled back, it raises the cable.

Boom Lift Joystick (Single Axis)

The Boom Lift Joystick (2) (Figure 3-8) is located on the right armrest. The joystick, when pushed forward, lowers the boom; when pulled back, it raises the boom.

Boom Lift and Main Hoist Joystick (Dual Axis Option—Not Shown)

The Boom Lift/Main Hoist Joystick is located on the right armrest. The joystick, when pushed to the right, lowers the boom; when pushed to the left, it raises the boom.

When used for main hoist, the joystick, when pushed forward, lowers the cable; when pulled back, it raises the cable.

Main Hoist Speed Selector Switch

The Main Hoist Speed Selector Switch (3) (Figure 3-8) is a three positioned maintained switch (HIGH/OFF/LOW) that is located on the right armrest. Positioning the switch to HIGH position allows main hoist functions and energizes the Main Hoist High Speed Solenoid, resulting in high line speeds. Positioning the switch to the center OFF position will prevent hoisting. Positioning the switch to the LOW position allows

main hoist functions and de-energizes the Main Hoist High Speed Solenoid, resulting in low line speeds.

Telescope or Auxiliary Hoist Joystick (Single Axis)

The Telescope or Auxiliary Hoist (TELE or AUX) Joystick (4) (Figure 3-8) is located on the left armrest. The joystick controls the telescope functions when the crane is not equipped with an auxiliary hoist. Push the joystick forward to telescope the boom out, or pull the joystick back to telescope boom in.

When equipped with an auxiliary hoist, the joystick controls the auxiliary hoist functions and the telescope functions are controlled through a foot pedal. Push the joystick forward to let out the hoist cable or pull the joystick back to reel the cable in.

Swing Joystick (Single Axis)

DANGER

Crushing Hazard!

Death or serious injury could result from being crushed by moving machinery.

Before actuating swing or any other function, sound horn and verify that all personnel are clear of rotating and moving parts.

The Swing Joystick (5) (Figure 3-8) is located on the left armrest and controls the swing function. The joystick, when pushed forward rotates the turntable clockwise; when pulled back, it rotates the turntable counterclockwise. The crane is capable of 360 degree continuous rotation in either direction.

Swing and Telescope or Swing and Auxiliary Hoist Joystick (Dual Axis Option—Not Shown)

DANGER

Crushing Hazard!

Death or serious injury could result from being crushed by moving machinery.

Before actuating swing or any other function, sound horn and verify that all personnel are clear of rotating and moving parts.

The Swing and Telescope or Auxiliary Hoist (SWING/TELE or SWING/AUX) Joystick is located on the end of the left armrest. The joystick controls the swing and telescope functions when the crane is not equipped with an auxiliary hoist. When equipped with an auxiliary hoist, the joystick controls the swing and auxiliary hoist functions and the telescope functions are controlled through a foot pedal.

If not equipped with an auxiliary hoist, pushing the joystick to the left or right actuates a control valve through hydraulic pilot pressure to provide 360 degree continuous rotation in the desired direction. Pushing the joystick forward actuates the control valve to telescope the boom out and pulling the joystick back actuates the boom to telescope in.

If equipped with an auxiliary hoist, pushing the joystick forward actuates the control valve to let out hoist cable and pulling the joystick back reels the cable in. Moving the joystick in a diagonal direction actuates the two functions simultaneously.

Auxiliary Hoist Speed Selector Switch (Optional)

The Auxiliary Hoist Speed Selector Switch (6) (Figure 3-8) is a three positioned maintained switch (HIGH/OFF/LOW) that is located on the left armrest. Positioning the switch to HIGH position allows auxiliary hoist functions and energizes the Auxiliary Hoist High Speed Solenoid, resulting in high line speeds. Positioning the switch to the center OFF position will prevent hoisting. Positioning the switch to the LOW position allows auxiliary hoist functions and de-energizes the Auxiliary Hoist High Speed Solenoid, resulting in low line speeds.

Rear Steer Switch

The Rear Steer Control Switch (7) (Figure 3-8) is a three-position, spring centered to off, rocker switch, located on the left armrest. Press the bottom of the switch to actuate a control valve to turn the rear wheels to the left, causing the crane to turn to the right. Press the top of the switch actuates a control valve to turn the rear wheels to the right, causing the crane to turn to the left. When the wheels are not centered the Rear Wheels Not Centered light on the steering column illuminates. Releasing the switch causes it to return to the center off position.

To straighten the rear wheels press the switch until the Rear Wheels Not Centered indicator light goes off.

Swing Brake Control Switch

The Swing Brake Control Switch (8) (Figure 3-8) is located on the left arm rest. This two-position rocker switch (ON/OFF) is used to control a hydraulic valve that directs a regulated flow of pressure to and from the swing brake. Positioning the switch to ON will apply the swing brake and positioning the switch to OFF will release the swing brake. When the switch is in the ON position, the red indicator light on the steering column is illuminated. The switch has a lock to prevent accidental activation.

Reference Only

Axle Differential Lock Control Switch (Optional)

NOTE: The differential lock will only work when the crane is in the 4WD mode.

The Differential Lock (Axle Diff) Control Switch (9) (Figure 3-8) is located on the left arm rest. It is a two position, momentary rocker switch placarded LOCK and UNLOCK. When positioned to LOCK, the splines on the shift collar are engaged with the splines on the differential case and the axle shafts and the differential assembly are locked together and there is no differential action between the wheels. When positioned to UNLOCK, there is normal differential action between the wheels all the time. The amber indicator on the steering column is illuminated when the switch in each axle is activated.

Cab Door Release

Use the Cab Door Release Lever (10) (Figure 3-8) to open and close the cab door from inside the cab.

Seat Back Adjustment

To adjust the back of the seat press the adjustment knob (11) (Figure 3-8) and then adjust the seat as needed.

A/C Heater, Climate Control

The crane cab Air Conditioner/Heater Climate Control unit (16) (Figure 3-8) is located in the cab under the driver's seat. The vents (12) are part of the climate control unit and can be adjusted to direct the flow of air.

Seat Slide Lever

Moving the Seat Slide Lever (13) (Figure 3-8) will slide the seat only, either forward or backward.

Seat Frame Slide Lever

Moving the Seat Frame Slide Lever (14) (Figure 3-8) will slide the seat and the seat frame either forward or backward.

Armrest Adjustment

The Armrest and armrest controls can be adjusted using adjustment knob (15) (Figure 3-8). Loosen the knob and rotate the entire armrest to the desire position, re-tighten the knob when finished making the adjustment.

Hoist Rotation Indicators

The Hoist Rotation Indicators for the auxiliary and main hoist is located on top of each hoist control lever (1,4) (Figure 3-8). Each indicator is electronically driven by an input signal from a sensor attached to its related hoist and an output signal from a control module. Each hoist control lever (1,4) pulses when its hoist is running so the operator's thumb can sense it.

HRI Display

The display is located in the front overhead panel Figure 3-9. The LED display illuminates to indicate the current hoist in operation and which direction the hoist is rotating.

Item	Description
1	Main Hoist UP (Clockwise)
2	Main Hoist DOWN (Counterclockwise)
3	Auxiliary Hoist UP (Clockwise)
4	Auxiliary Hoist DOWN (Counterclockwise)

FIGURE 3-9

Hydraulic Boost Switch

The Hydraulic Boost Switch (17) (Figure 3-8) is located on the right armrest. This two position switch is used to control the High Speed Boost Selector Valve. With the switch in the ON position, the solenoid valve is energized. In this state, the solenoid valve stops the flow of oil from Pump No. 1, Section 2 to the Rear Steer/Outrigger Valve. The poppet check valve opens to combine this flow of oil with the output from Pump No. 1, Section 1.

NOTE: The hydraulic boost function is disabled when outrigger extend or retract is selected, rear steer right or left is selected, or when the transmission is not in neutral.

Armrest Switch (Not Shown)

The Armrest Switch is a proximity switch located in the left hand armrest. The left hand armrest must be in the down position before crane functions can be activated.

Seat Switch (Not Shown)

This switch is located in the seat. An operator must be sitting in the seat before the crane functions can be activated.

Reference Only

SIDE CONTROL PANEL

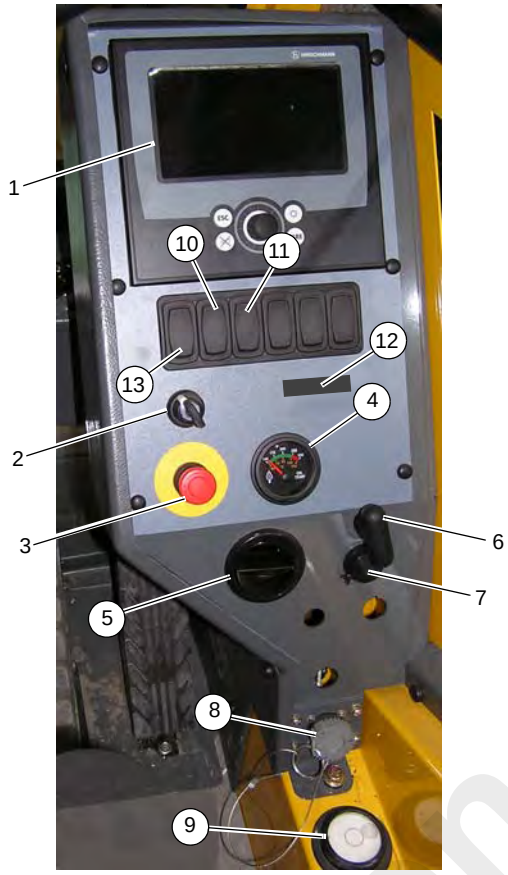

FIGURE 3-10

Figure 3-10 Item Numbers

Item	Description
1	Rated Capacity Limiter (RCL) Display
2	Rated Capacity Limiter (RCL) Bypass Switch
3	Emergency Stop Switch
4	Transmission Oil Temp Gauge
5	AC/Heater Vent
6	Turntable Pin Swing Lock Control
7	12 Volt Receptacle
8	Diagnostic Connector
9	Bubble Level Indicator
10	3rd Wrap Indicator (optional)
11	Cold Weather Indicator (optional)
12	Ambient Temperature LED Indicator (optional)
13	Boom Not Synchronized Indicator

Rated Capacity Limiter (RCL) and Work Area Definition System (WADS) Control Panel

The RCL and WADS Control Panel (1) (Figure 3-10) is located on the right side of the cab. It maintains the controls and indicators for the crane's Rated Capacity Limiter System and Work Area Definition System. Refer to the RCL Manual for detailed information.

Rated Capacity Limiter (RCL) Bypass Switch

The RCL Bypass (Override) Switch (2) (Figure 3-10) is a momentary type switch. Turn and hold the key to the ON position (right) to disengage the RCL controls. Release the key to allow the RCL controls to re-engage.

The RCL will be bypassed only as long as the switch is in the ON position.

Turning the key switch to the ON position re-engages the boom down, telescope out and hoist up functions, which are disabled when an overload condition is sensed by the Rated Capacity Limiter (RCL). It is important to read and understand the RCL Override Warning information in the RCL Operator Manual before using the RCL Bypass switch (2) or the RCL on/off switch.

Emergency Stop Switch

The crane Emergency Stop Switch (3) (Figure 3-10) is located on the cab console and is used to shut down the crane's engine. Push the red button in to shut down the engine, which illuminates the Emergency Stop indicator on the steering column. Rotate the knob and pull out to resume normally operation.

Transmission Oil Temperature Gauge

The Transmission Oil Temperature (TRANS TEMP) Gauge (4) (Figure 3-10) is located in the center of the front console. The gauge indicates the transmission oil temperature on a dual scale calibrated from 60°C to 160°C and 140°F to 320°F. The gauge receives a signal from a temperature sending unit in the oil line at the torque converter.

Turntable Pin Swing Lock Control

The Turntable Pin Swing Lock Control Handle (6) (Figure 3-10) is located on the side control panel. The purpose of the pin swing lock is to lock the superstructure in position directly over the front for pick and carry loads.

When the control handle is pushed in and the superstructure is directly over the front, the swing lock pin drops into the socket on the carrier frame, locking the superstructure in place.

Reference Only

When the control handle is pulled out, the pin is pulled out of the socket, unlocking the superstructure.

CAUTION

Swing Lock Damage!

Do not engage the Pin Swing Lock while superstructure is in motion. Center boom over the front and engage Pin Swing Lock to prevent superstructure rotation during travel.

12V Receptacle

This 12 volt accessory outlet (7) (Figure 3-10) is located on the lower part of the control panel and is designed to mate with most 12 volt adapter plugs.

Diagnostic Connector

The Diagnostic Connector (8) (Figure 3-10) is located on the lower part of the front control panel. It is used for servicing the crane's electrical system.

A laptop computer with a nine pin cable connector and the appropriate service software are required. Contact your local Grove distributor or Manitowoc Crane Care for assistance.

Bubble Level Indicator

The Bubble Level Indicator (9) (Figure 3-10) is located on the right side console. The indicator provides the operator with a visual aid in determining the levelness of the crane.

Hoist Third Wrap Indicator (Optional—Standard on CE)

The Hoist 3rd Wrap Indicator (10) (Figure 3-10) is located on the right side console. The indicator will illuminate red when three wraps or less of cable remain on either hoist.

Cold Weather Indicator (Optional)

The optional Cold Weather Indicator (11) (Figure 3-10) is located on the right side console. The indicator comes on when ambient temperature is at or below -29°C (-20°F). It serves as a warning for the operator to stop operation in extreme cold.

Ambient Temperature LED Indicator

The Ambient Temperature LED Indicator (12) (Figure 3-10) is located on the right side console. When the ambient temperature outside the crane reaches below -29°C (-20°F) the LED indicator will illuminate and send a signal to the RCL system. This temperature control is to prevent operation of crane lifting functions in temperatures below -29°C (-20°F). The system will initiate lockout of the following crane functions: hoist up, boom down, and boom telescope-extend. Hoist lowering, boom up and boom telescope-retract along with lockout override, will still be operational to lower the load.

Boom Not Synchronized Indicator

The Boom Not Synchronized Indicator (13, Figure 3-10) is located on the right side console and is controlled by the rated capacity limiter (RCL). It illuminates red when the RCL senses that the boom sections are not synchronized. The Boom Manual/Automatic Mode Selector Switch (13, Figure 3-4) and Boom Section 1/Section 2 Selector Switch (11, Figure 3-4) are used together to manually control the extension and retraction of the boom sections to re-synchronize the boom with the RCL.

OUTRIGGER CONTROL

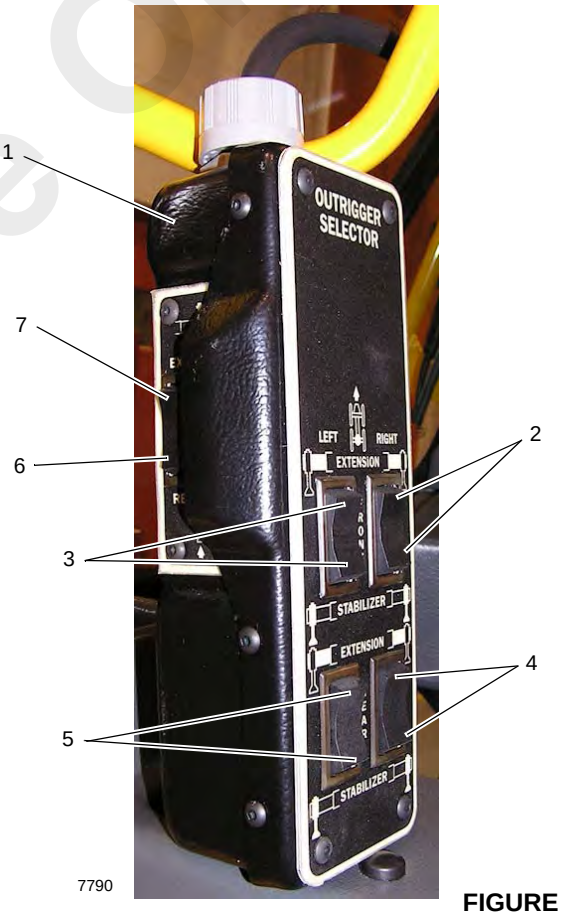

FIGURE 3-11

Item	Description
1	Outrigger Control Box
2	Right Front Extension/Jack Cylinder
3	Left Front Extension/Jack Cylinder
4	Right Rear Extension/Jack Cylinder

Reference Only

Item	Description
5	Left Rear Extension/Jack Cylinder
6	Retract O/R
7	Extend O/R

The Outrigger Control Box (1, Figure 3-11) is stowed in the cab (Figure 3-1) and is used to control the outriggers from inside the cab.

NOTE: The park brake must be engaged for the outriggers to operate.

Extend/Retract Switch

The Extend/Retract Switch (6,7 Figure 3-11) is located on the side of the Outrigger Control Box and is used in conjunction with the Outrigger Selector Switches (2,3,4,5 Figure 3-11) to control the outrigger functions.

Outrigger Selector Switches

There are four Outrigger Selector Switches (2,3,4,5 Figure 3-11) on the Outrigger Control Box. To extend or retract an outrigger component, first select the component with the Outrigger Selector Switch (2,3,4,5), then select extend or retract with the Extend/Retract Switch (6,7 Figure 3-11).

FOOT PEDAL CONTROLS

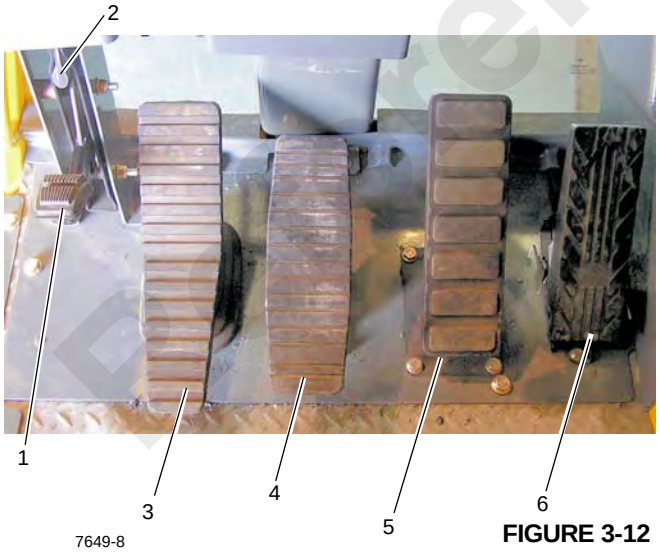

FIGURE 3-12

Figure 3-12 Item Numbers

Item	Description
1	360° Swing Lock Pedal
2	360° Swing Lock Release Lever
3	Swing Brake Pedal
4	Telescope Control Foot Pedal (Optional)
5	Service Brake Foot Pedal
6	Foot Throttle Pedal

360° Swing Lock Pedal

The 360° Swing Lock Pedal (1) (Figure 3-12) is located on the left side of the crane cab floor. The pedal is used to activate the swing lock to prevent the turret from turning. To release the swing lock, pull up on the 360° Swing Lock Release Lever (2).

Swing Brake Pedal

The Swing Brake Pedal (3) (Figure 3-12) is located on the left side of the cab floor. The swing brake pedal is used to actuate the swing brake to slow or stop swing motion. Braking is proportional to pedal depression. With the pedal not depressed and the swing brake control valve disengaged, hydraulic pressure is applied to the brake, overcoming spring pressure and releasing the brake. Depressing the pedal actuates a swing power brake valve to apply pressure to the brake assembly. This pressure aids the spring pressure to overcome the hydraulic pressure being applied to the brake release circuit and applies the spring brake according to the pressure from the swing power brake valve.

Telescope Control Foot Pedal (Optional)

The Telescope Control Foot Pedal (4) (Figure 3-12) is supplied when the crane is equipped with an auxiliary hoist, is located on the left side of the cab floor. Pushing forward on the top of the pedal will extend the boom and pushing down on the bottom of the pedal will retract the boom.

Service Brake Foot Pedal

The Brake Foot Pedal (5) (Figure 3-12) is the second pedal from the right on the cab floor. Depressing the pedal controls the application of the service brakes.

Foot Throttle Pedal

The Foot Throttle Pedal (6) (Figure 3-12) is located under the RCL display module, on the floor. It is used to control engine RPM which increases or decreases proportionately with the amount of foot pressure applied to the pedal. The pedal is electrically connected to the superstructure control module which sends the signal to the engine ECM via the J1939 data link.

Reference Only

MISCELLANEOUS CONTROLS AND INDICATORS

Fuse Panel

The fuse panel (1) (Figure 3-13) is located behind the cab seat and on the cab fuse and relay panel assembly. It contains up to 20 fuses that protect the various electrical components of the crane.

Buzzer

The buzzer (2), located behind the cab seat, sounds when the following conditions exist:

- the ignition switch is turned to RUN; buzzer will sound for two seconds
- after the engine is started until the proper engine oil pressure is reached
- engine stop
- emergency stop switch activated
- transmission service
- low brake pressure
- high hydraulic oil temperature
- high transmission oil temperature
- low steer pressure condition (for CE units)
- hoist third wrap condition (for CE units)

Rated Capacity Limiter (RCL) Emergency Override Switch (Non-CE Certified Cranes)

WARNING

Loss of RCL Monitoring Hazard!

The RCL Emergency Override switch is to be used in emergency situations only.

Do not operate the crane with the RCL overridden during normal operations.

When the RCL is overridden always have a helper on the ground to signal you.

The RCL system, when programmed accurately, will lockout the three craning functions—boom down, telescope extend, and hoist up—when a lift is attempted at or above the crane's capacity or when a two-block condition exists. Locking out these three functions prevents the overload or two-block condition from worsening.

The RCL emergency override switch (3, Figure 3-13) is a key operated switch that is located inside the operator cab on the panel assembly behind the seat. When actuated (turned clockwise), the switch will override and prevent the RCL from locking out the three craning functions (boom down, telescope extend, and hoist up) should an overload or two-block condition occur.

Overriding the RCL with this switch should only be done in the case of an emergency or when servicing the boom.

A flashing light on the RCL display indicates the switch has been activated.

Refer to the *RCL operator's manual* for more information.

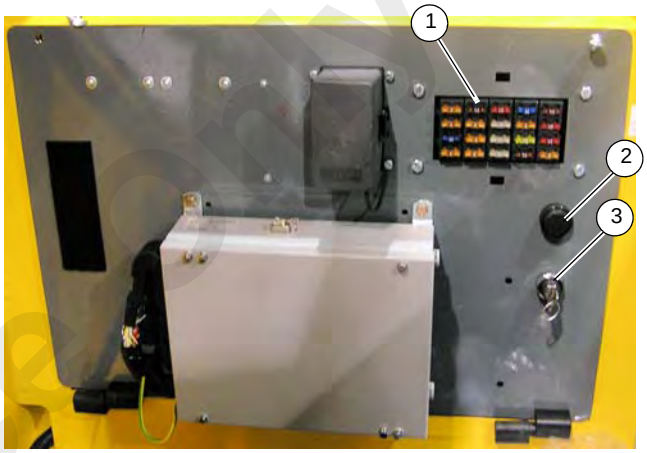

7649-9

FIGURE 3-13

Rated Capacity Limiter (RCL) Emergency Override Switch and Indicator (CE Certified Cranes)

WARNING

Loss of RCL Monitoring Hazard!

The RCL Emergency Override Switch is to be used in emergency situations only.

Do not operate the crane with the RCL overridden during normal operations.

When the RCL is overridden, always have a helper on the ground to signal you.

The RCL system, when programmed accurately, will lockout the three craning functions—boom down, telescope extend, and hoist up—when a lift is attempted at or above the crane's capacity or when a two-block condition exists. Locking out these three functions prevents the overload or two-block condition from worsening.

The RCL emergency override switch is located inside a key-locked single-door enclosure (1, Figure 3-14) that is attached to the outside rear of the operator's cab. The switch is a two-position momentary rocker switch with integral

Reference Only

indicator that, when actuated, will override and prevent the RCL, for a period of 30 minutes, from locking out the three craning functions (boom down, telescope extend, and hoist up) should an overload or two-block condition occur.

Overriding the RCL with this switch should only be done in the case of an emergency or when servicing the boom.

The indicator in the override switch will illuminate red and the RCL and A2B override indicators on the RCL display will flash to indicate the switch has been activated. Upon activation, all craning function movements are reduced to 15% of their normal maximum speeds.

The RCL override function is automatically cancelled after 30 minutes. The RCL override function can also be cancelled by the operator by either pressing the RCL emergency override switch a second time, by turning off the engine, or by turning the crane function power switch off.

Refer to the *RCL operator's manual* for more information.

7649-36 **FIGURE 3-14**

RCL Internal Light Bar (Optional) (Not Shown)

The Rated Capacity Limiter (RCL) Internal Light Bar is located on the upper left hand corner of the crane cab. The RCL is an operational aid that warns a crane operator of approaching overload conditions and over hoist conditions that could cause damage to equipment and personnel.

Strobe Light or Beacon (Optional) (Not Shown)

The strobe light or beacon is on the roof of the cab. It is on when the ignition switch is on.

Backup Alarm (Not Shown)

The backup alarm is an audio system used to warn personnel outside the crane when the crane is backing up. The alarm system is electrical and consists of the backup alarm and its associated wiring. The alarm is connected to the electrical wiring for the transmission reverse solenoids. It is activated when the transmission shifter is in the reverse position. The backup alarm is installed in the rear outrigger box behind the grill plate.

Emergency Exit

The windshield is considered the Emergency Exit. In an emergency, push out on the windshield and escape through the opening.

OPERATING PROCEDURES

Pre-Starting Checks

A complete walk-around visual inspection of the crane should always be made with special attention to structural damage, loose equipment, leaks, or other conditions that would require immediate correction for safety of operation. The following checklist items are suggested specifically for the operator's benefit to make certain his crane is prepared for starting the day's work.

Fuel Supply

Check the fuel level and make sure the cap is on tight.

Engine Oil

Check the oil level in the crankcase and fill to the FULL mark on the dipstick. Do not overfill.

Engine Coolant

Check the coolant level in the radiator surge tank sight gauge and fill to the proper level. Do not overfill. Check to make sure the radiator and reservoir caps are secure.

Batteries

Check that the battery cables and clamps are tight and not corroded.

Signal and Running Lights

Check all signal and running lights for proper operation. Replace burned out lamps with those of the same number or equivalent.

Foot and Parking Brakes

Check the foot and parking brakes for proper operation.

Daily Lubrication

Make certain that all components requiring daily lubrication have been serviced. (Refer to *Lubrication*, page 5-1.)

Reference Only

Hydraulic Reservoir and Filter

Check hydraulic fluid quantity level and filter condition indicator. Check breather for cleanliness and ensure it is secure.

Tires

Check for severe cuts, foreign objects embedded in treads, and for correct inflation pressures. A tire inflation chart, providing the correct air pressures, is located in the Load Chart Book in the crane cab.

Hoist Rope

Inspect hoist rope in accordance with applicable Federal Regulations.

Inspect sheaves, guards, guides, drums, flanges, and any other surfaces that may come in contact with the rope for any condition that could cause possible damage to the rope.

Hook Block

Visually inspect for nicks, gouges, cracks, and evidence of any other damage. Replace any hook that contains cracks or shows evidence of excessive deformation of the hook opening, including twist. Be sure the safety latch is free and aligned.

Air Cleaner

Check filter and tubing for security.

Cold Weather Operation

Regions with ambient temperatures below -9°C (15°F) are considered arctic. The following recommendations are for operating Grove cranes in very low (i.e., sub-zero) temperatures.

Use particular care to ensure cranes operated in very cold temperatures are operated and maintained in accordance with procedures as provided by Manitowoc.Always ensure adequate lubrication during system warm-up and proper operation of all crane functions when operating in cold weather. Regardless of oil viscosity of the crane's lubricants, always follow cold weather start-up and operating procedures described in the *Operator Manual.*

To ensure adequate lubrication during system warm-up and proper operation of all crane functions, (Refer to *Arctic Lubricants and Conditions*, page 5-3.) If in doubt of the suitability of a specific fluid or lubricant, check with an authorized Manitowoc distributor or Manitowoc Crane Care. Cranes should have appropriate hydraulic oil, lubricants, and other auxiliary items required for operation in sub-zero temperatures.

Manitowoc recommends the crane is equipped with the following cold weather accessories:

-29°C (-20°F) Package

- Battery heater
- Fuel line heater
- Engine hood insulation
- Fan clutch
- Radiator air shutters
- Air diverter
- Diesel fired cab heater
- Cold weather alternator
- Fluids suitable to -29°C (-20°F)
  - Arctic windshield washer fluid
  - Arctic fuel

-40°C (-40°F) Package

- Coolant heater (to circulate warm coolant through heaters and engine)
- Transmission heater
- Swivel heater
- Battery heater
- Fuel line heater
- Engine hood insulation
- Fan clutch
- Radiator shutters
- Air diverter
- Diesel fired cab heater
- Cold weather alternator
- Super-capacitor starting system
- Fluids suitable to -40°C (-40°F):
  - Arctic windshield washer fluid
  - Arctic fuel

Individual crane functions should be operated to ensure they are sufficiently warmed prior to performing a lift.

Operation of cranes at full rated capacities in ambient temperatures between -9°C and -40°C (15°F and -40°F) or lower should be accomplished only by competent operators who possess the skill, experience, and dexterity to ensure smooth operation.

Shock loading shall be avoided. See Section 5 of this manual for more detailed information on operation of cranes down to -40°C (-40°F).

Reference Only

Component Coolant Heater

A diesel fueled coolant heater circulates warm coolant through engine and crane components when operating during arctic temperatures. Activate coolant heater 2 hours before starting the crane to allow sufficient time to preheat fluids and assist with easy start-up conditions.

WARNING

Explosion Hazard!

Before switching on, check if the heater can be operated at the current site of the crane. There is a danger of explosion when using the heater around combustible objects! Do not park the vehicle near objects that are flammable.

Use caution near the exhaust tailpipe as it will also become very hot.

NOTE: Operation of the heater is not permissible:

- At locations where flammable gas or vapors are found or can be formed (example: at fuel stations and chemical factories)
- At locations where explosive dust is found or can be formed (example: coal, wood or grain dust).
- There is a risk of suffocation when using the heater!
- Do not operate the heater in enclosed spaces (example: garages).

To activate the heater, ensure the fuel supply valve from the heater fuel reservoir is turned to the ON position. Ensure the battery disconnect switch is turned to the ON position and push the activation button at the heater control panel. A green light will illuminate indicating the system is activated. The start-up and shutdown cycles may take approximately 2 minutes for initialization. Ensure the coolant, transmission heater, swivel, battery heater, in-line fuel pump, in-line fuel heater, and hydraulic reservoir heater are heating properly.

To de-activate the heater, push the button at the heater control panel. The green light will turn off indicating the system is de-activated. The shutdown cycle may take approximately 2 minutes.

NOTE: Accelerated discharging of battery will occur when the crane engine is switched off. If you run the heater while the crane engine is stopped, the batteries voltage will need to be recharged after short periods of time.

Radiator Shutters

When starting the engine, shutters on the radiator will close and then open when coolant temperature reaches 71°C (160°F).

Auxiliary Cab Heater

The superstructure crane cab is heated with an auxiliary air heating system that runs independently of the engine. Heat is generated by burning fuel from the heater fuel reservoir.

To heat the operator's cab, activate the auxiliary diesel heater and adjust the temperature control switch mounted in the overhead panel. The fan for the heating system delivers warm air into an air distribution box. Air is circulated according to control settings and delivered into the crane cab by a fan through various air extraction and air delivery vents.

Do not cover vents with bags, articles of clothing, or any other objects. Keep hot air inlet and hot air outlet free of dirt and foreign bodies. Soiled or blocked hot air lines may cause overheating and result in damage.

The crane auxiliary cab heater can be operated while the diesel engine is running or is stopped as part of the programmable auxiliary heating system). The standard hot water crane cab heater can also be turned on after the engine has started and is warmed to operating temperature.

NOTE: When using the heater at high altitudes, the factory heater setting will need to be re-calibrated for proper heater operation.

- Heating at altitudes up to 1,500 m (4,921 ft)

  Unlimited heating is possible

- Heating at altitudes over 1,500 m - 3,000 m and (4,921 ft - 9,842 ft)

  Heating is possible for short periods at this altitude (example: driving over a mountain pass or taking a break while travelling between job sites).

During longer stays, (example: construction job project), the fuel supply must be adjusted to the altitude or the heater will malfunction. This can be done by installing an air pressure sensor kit (Manitowoc part number 90037674). Contact an authorized Manitowoc distributor or Manitowoc Crane Care for additional assistance.

NOTE: Accelerated discharging of battery will occur when the crane engine is switched off. If you run the heater while the crane engine is stopped, the batteries voltage will need to be recharged after short periods of time.

Reference Only

Battery Heater

If machine is equipped with cold weather package, ensure battery heater coolant valve is switched off in ambient temperatures above -9°C (15°F).

Air Diverter

An air diverter directs warmed air collected from under the engine hood when the temperature is below -9°C (15°F) to preheat the air intake going to the engine.

If machine is equipped with cold weather package, ensure air diverter is switched to outside air intake in ambient temperatures above -9°C (15°F).

Super Capacitor

The super capacitor provides additional cranking during cold weather startup. The super capacitor is connected to the standard batteries with an isolation relay. The positive relay feed is activated when the key is in the crank and run positions.The super capacitor allows the starter to be cranked for 30 seconds then cycled off for 60 seconds before cranking again until the engine starts.

If crane has been left with battery disconnected for an extended period of time, super capacitor will need up to 30 minutes to charge before having full cranking capacity.

Charge of capacitor can be measured by the following:

- Turn battery disconnect to on position.
- Press black button located on top of capacitor:
- If light flashes green, capacitor is charging and may not successfully start machine.
- If light is solid green, capacitor is charged and ready for starting.

Any other color or flash pattern may indicate an error, reference decal located on capacitor.

Diesel Fuel

Diesel fuel with low temperature characteristics is required to operate the engine down to an ambient temperature range from - 40°C (-40°F) to 49°C (120°F). Refer to the applicable engine manual for proper specifications.

Use correct grade of fuel for the prevailing temperature. Diesel fuel should have a cloud point of 6°C (10°F) less than the lowest expected temperature. In case of emergency, kerosene may be added to the fuel to bring the cloud point down to the required temperature.This will minimize clogging of filters and small passages by wax crystals. The addition of kerosene is NOT recommended for general use. Refer to the *Cold Weather Package and Lubricants*, page 5-3 of this operator manual.

CAUTION

Engine Damage Hazard!

If “Ultra Low Sulfur” fuel is not used in engines that require it, the engine warranty will be void. Engine performance will quickly deteriorate and it may stop running.

Operation Below -40°C (-40°F)

For crane operation below -40°F, capacities shall be derated 3.67% of the capacities shown on the load chart for each 1.8°F below -40°F (1°C below -40°C).

CRANE WARM-UP PROCEDURES

The following procedures detail the actions that must be taken to properly warm the different crane components before operating the crane.

NOTE: For temperatures below -9°C (15°F) refer to arctic lubricants and conditions in the Operator and Service Manuals.

Before starting the crane, ensure the appropriate lubricants are used for the prevailing ambient temperatures in which the crane will operate in (a list of lubricants and their temperature ranges can be found in the Lubrication section of your crane’s *Operator Manual*, by contacting your local Manitowoc distributor, or by contacting Manitowoc Crane Care directly).

CAUTION

Crane Damage Hazard!

Operating the crane with the incorrect lubricants and fluids for the prevailing ambient temperature and/or failing to adequately warm the crane prior to cold weather operation can lead to a failure of a crane component or system.

Always use Manitowoc recommended lubricants and fluids for the prevailing ambient temperature and properly start and warm the crane using the cold weather procedures found in this Operator’s Manual and supplement before operating the crane at full load.

Engine

Warm-up Procedures for All Temperature Ranges:

1. Upon startup, allow the engine to idle for 3 to 5 minutes before operating with a load.
2. Cold Engine Startup: After allowing the engine to warm by idling it for 3 to 5 minutes, slowly increase the engine speed to provide adequate lubrication to the bearings and to allow the oil pressure to stabilize.

Reference Only

Transmission

Operating the transmission with a sump temperature below normal operating temperature is limited to:

- operating in the neutral gear or
- driving with an unloaded crane while not exceeding 1500 engine RPM and not exceeding half throttle.

Warm-up Procedures for Rough Terrain (RT) and Industrial Cranes:

1. Engage the parking brake and apply the service brake.
2. Shift the transmission into the highest gear and increase the engine RPM to 1500 for 15 seconds, then allow the engine RPM to return to idle.
3. Repeat Step 2 until the temperature of the transmission sump reaches normal operating temperature.

Alternate Warm-up Procedures for Rough Terrain (RT), Truck Mount (TM/TMS), and Industrial Cranes:

1. Setup the crane on outriggers.
2. Engage the transmission with 4-wheel drive selected (if equipped) and allow crane to run at idle until the temperature of the transmission sump reaches normal operating temperature.

NOTE: Warm-up operation of 4-wheel drive transmission engaged in 2-wheel drive only could cause transmission damage.

Hoist

Performing a warm-up procedure is recommended at every startup and is required at ambient temperatures below 4°C (40°F).

Warm-up Procedures:

1. Without operating the hoist function, warm the hydraulic oil (see *Hydraulic Oil System*, page 3-25).
2. Once hydraulic system is warm, operate the unloaded hoist, in both directions, at low speeds several times to prime all hydraulic lines with warm hydraulic oil and to circulate gear lubricant through the planetary gear sets.

Swing Drive and Turntable Bearing

Warm-up Procedures for Temperatures Above -7°C (20°F):

1. Setup crane on fully extended outriggers, with boom fully retracted and near maximum lift angle with no load applied.
2. Rotate the superstructure at a speed of less than one RPM for at least one complete revolution in one direction, then rotate the superstructure at a speed of less than one RPM for at least one complete revolution in the opposite direction.

Warm-up Procedures for Temperatures Below -7°C (20°F):

1. Ensure the boom is fully retracted and near maximum lift angle with no load applied.
2. Rotate the superstructure at a speed of less than one-half RPM for at least two complete revolutions in one direction, then rotate the superstructure at a speed of less than one-half RPM for at least two complete revolutions in the opposite direction.

Axles

Warm-up Procedures for Temperatures Below -35°C (-30°F):

1. Setup the crane on outriggers.
2. Engage the transmission (see *Transmission*, page 3-25) with 4-wheel drive selected (if equipped) and allow crane to run at idle until temperature of the transmission sump reaches normal operating temperature.

NOTE: Warm-up operation of 4-wheel drive transmission engaged in 2-wheel drive only could cause transmission damage.

Hydraulic Oil System

Operating Limits and Warm-up Procedures:

- **From 4°C to -10°C (40°F to 15°F):** Crane operation without a load is allowed with medium engine RPM and medium function speed (joystick position) until the fluid reaches at least 10°C (50°F). It is then recommended that all crane functions be cycled to remove cold fluid from all components and cylinders of the hydraulic system.
- If there is any unusual sound coming from the crane's hydraulic pumps or motors, stop operation and engine immediately and contact a Manitowoc distributor.
- **From 10°C to 4°C (50°F to 40°F):** Crane operation with a load is allowed with medium engine RPM and medium function speed (joystick position) until the fluid reaches at least 10°C (50°F).
- **From 95°C to 10°C (200°F to 50°F):** Crane operation with a load is allowed with no restrictions.

Above 95°C (200°F): No crane operation is allowed. Let the crane's hydraulic oil cool by running the engine at idle with no functions actuated.

Reference Only

Engine Operation

Starting and shutdown procedures for most diesel engines generally follow the same pattern. Therefore, the following procedures can be applied except where specific differences are noted. (Refer to the applicable engine manufacturers manual for detailed procedures.)

Starting Procedure

Make an under-the-hood inspection for fuel, oil, and coolant leaks, worn drive belts, and trash build-up

CAUTION

Health Hazard!

Diesel engine exhaust can be harmful to your health. Only operate the engine in a well ventilated area or vent exhaust outside.

Unexpected Operation Hazard!

Before starting engine, apply parking brake and engage the swing lock.

CAUTION

Machine Damage!

Never crank the engine for more than 30 seconds during an attempted start. If the engine fails to start after 30 seconds, stop and allow the starter motor to cool for approximately two minutes before attempting another start.

If the engine fails to start after four attempts, correct the malfunction before attempting further starts.

Use the correct grade of oil for the prevailing temperature in the crankcase to prevent hard cranking. Diesel fuel should have a cloud point of 6°C (10°F) less than the lowest expected temperature. In case of emergency, white kerosene may be added to the fuel to bring the pour point down to the required temperature.This will prevent clogging of filters and small passages by wax crystals. The addition of kerosene is NOT recommended for general use.

Battery Disconnect Switch

Ensure Battery Disconnect Switch handle (1) (Figure 3-15) is in the ON position (handle shown in the OFF position)

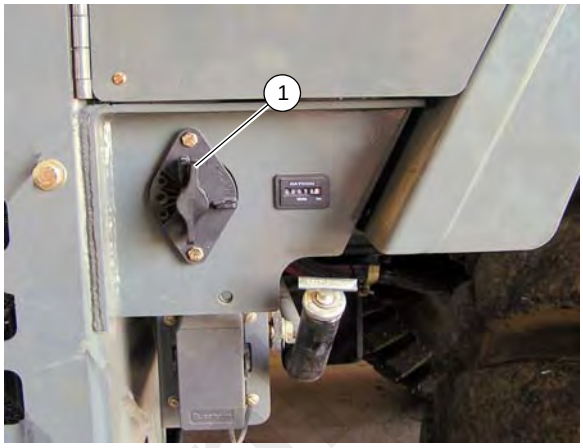

7693-2 FIGURE 3-15

Warm Engine

NOTE: The engine ECM monitors the engine and, under certain conditions, cycles the air heater on and off at start-up and during operation.

The engine is equipped with an electric air heater grid at the air inlet elbow to aid in cold starting and reduce white smoke at start-up. In the preheat mode, the engine should not be cranked until the Wait-to-Start lamp turns off.

1. Ensure parking brake is set to ON, position transmission to neutral, and depress the service brake foot pedal.

NOTE: Engine will not crank unless the transmission shift lever is in neutral and the service brake foot pedal is depressed.

The buzzer will sound upon turning the Ignition Switch to START and turn off after proper engine oil pressure is reached.

2. Turn Ignition switch to START and release immediately when the engine starts. Do not push or hold the throttle down. The ECM will automatically provide the proper amount of fuel to start the engine.

3. Immediately check engine instruments and warning lights for proper indication after starting.

CAUTION

Engine Damage!

If any warning light stays on or indicator(s) do not display proper readings, shut down the engine and correct the malfunction before resuming operation.

4. Allow engine to warm up at least five minutes before applying a load. Do not race engine for a faster warm up.

Cold Engine

WARNING

Risk of Explosion!

Do not spray starting fluid into the air inlet. The spray will contact the heater elements and could explode causing personal injury.

NOTE: The engine ECM monitors the engine and, under certain conditions, cycles the air heater on and off at start-up and during operation.

The engine is equipped with an electric air heater grid at the air inlet elbow to aid in cold starting and reduce white smoke at start-up. In the preheat mode, the engine should not be cranked until the Wait-to-Start lamp turns off.

1. Prior to starting a cold engine, ensure the Crane Function switch is positioned to OFF.
2. Ensure the parking brake is set to On, position the transmission to neutral, and depress the service brake foot pedal.

NOTE: The engine will not crank unless the transmission shift lever is in neutral and the service brake foot pedal is depressed.

The buzzer will sound upon turning the Ignition Switch to START and turn off after proper engine oil pressure is reached.

3. The Wait-to-Start lamp is illuminated during the preheat time that takes place when the Ignition switch is in the ON position during cold weather starting. To minimize cranking time during cold weather starting, the engine should not be cranked until the Wait-to-Start lamp turns off.
4. Turn the Ignition switch to START and release immediately when the engine starts. Do not push or hold the throttle down. The ECM will automatically provide the proper amount of fuel to start the engine.
5. Immediately check the engine instruments and warning lights for proper indication after starting.

CAUTION

Engine Damage!

If any warning light stays on or indicator(s) do not display proper readings, shut down the engine and correct the malfunction before resuming operation.

6. Allow engine to warm up at least five minutes before applying a load. Do not race engine for a faster warm up.

Detailed cold weather starting and operating procedures are covered in the engine manual.

Idling the Engine

Idling the engine unnecessarily for long periods of time wastes fuel and fouls injector nozzles. Unburned fuel causes carbon formation, oil dilution, formation of lacquer or gummy deposits on the valves, pistons, and rings, and rapid accumulation of sludge in the engine.

NOTE: When prolonged idling is necessary, maintain at least 850 rpm.

Racing the Engine

NEVER race the engine during the warm-up period. NEVER operate the engine beyond governed speed (as might occur in downhill operation or downshifting). Engine bearings, pistons, and valves may be damaged if these precautions are not taken.

Shutdown Procedure

1. Allow the engine to operate at idle for about five minutes to avoid high internal heat rise and allow for heat dissipation.
2. Turn the Ignition switch to OFF.

Transporting the Crane

CAUTION

Machine Damage!

Dead end lug not to be used as tie down point for boom during transportation. Failure to comply may result in machine damage. When the boom is secured for transport, boom shall not be constrained. All securement must allow for reasonable freedom of movement.

Crane Travel Operation

Traveling — General

WARNING

Inadvertent Operation Hazard!

Before traveling, ensure the crane function switch is in the off position. This will prevent inadvertent operation of craning functions due to bumping of the controllers while traveling.

RT machines are subject to the same road regulations as any truck regarding gross weight, width, and length limitations.

Reference Only

Although RT machines are specifically designed for rough terrain, the operator should be extremely cautious and aware of the terrain in which he is operating.

WARNING

Tipping Hazard!

Avoid holes, rocks, extremely soft surfaces, and any other obstacles which might subject the crane to undue stresses or possible overturn.

Do not drive the crane with the boom off center because automatic oscillation lockout will occur, making the crane subject to tipping on uneven surfaces. Center the boom over the front, turn the Swing Brake Switch to ON and engage the Turntable Lock Pin (if equipped).

Fully retract the boom and ensure the swingaway jib is properly stowed and secured.

CAUTION

Machine Damage!

Traveling at speeds greater than 16 km/h (10 mph) with the fixed counterweight installed and the boom extension stowed can result in axle failure if the boom angle is less than 10°.

When traveling at speeds greater than 16 km/h (10 mph) in the above configuration, ensure that the boom is elevated to an angle between 10° to 20° and the hook block is stowed in the storage tray.

CAUTION

Machine Damage!

Traveling at speeds greater than 16 km/h (10 mph) with the hydraulically removable counterweight installed and the boom extension stowed can result in axle failure if the boom angle is less than 15°.

When traveling at speeds greater than 16 km/h (10 mph) in the above configuration, ensure that the boom is elevated to an angle between 15° to 20° and the hook block is stowed in the storage tray.

CAUTION

Machine Damage!

Do not travel with an empty hook in a position where it can swing freely (except where noted). Either remove the hook block and/or headache ball from the hoist cable(s) and stow securely or make sure the hook block or headache ball is properly secured to the tie down provided for that purpose.

Do not drive the crane with the lift cylinder bottomed. At a minimum, position the boom slightly above horizontal.

Fully retract the outrigger jack cylinders and properly store the floats.

Disengage Main Hydraulic Pump via pump disconnect for cold weather starting of the engine (Sub-Zero). Pump must be re-engaged for travel.

Use four-wheel drive only when greater traction is necessary. (Refer to *Four-Wheel Drive Operation*, page 3-33 for operating instructions.)

CAUTION

Machine Damage!

On open ground, tow or pull only on the tow/tie-down lugs or with the optional pintle hook.

Do not tow or pull in 1st gear with the Drive Axle Selector Switch in two-wheel drive position. Severe damage to the drive train will result. Always engage four-wheel drive.

Should the crane become mired down, use a tow truck or tractor to free the vehicle. Severe damage to the transmission or axles may occur if the operator attempts to free the crane unassisted.

There are two tow/tie-down lugs installed on each end of the crane. Use both lugs to tow or pull the crane.

Ensure the outrigger beams and jack cylinders are fully retracted with the floats properly stowed.

Traveling on Slopes

Crane operators need to exercise caution whenever operating the crane on uneven surfaces. Travel on slopes is permitted if the following conditions are met.

- Do not exceed a 15% (8.5°) slope side-to-side or fore-and-aft.
- Travel must be on an improved surface or on hard-packed dry earth having a minimum 0.5 coefficient of adhesion.
- Limit travel to a forward direction only.
- Do not exceed a speed of 1.6 km/h (1 mph).

Reference Only

- Fully retract all boom sections.
- Stow or remove the boom extension from the crane.
- Lower the boom to horizontal and position over the front of the crane.
- Engage the swing brake and turntable lock pin.
- Either the hook block may be reeved over the main boom nose or the headache ball may be reeved over the main boom nose or auxiliary boom nose; the other must be removed. If the hook block or headache ball remains reeved on the boom, it must be secured at the tie down on the carrier to prevent swinging.
- Inflate tires to the recommended pressure for pick and carry operations.
- Ensure the hydraulic tank is filled to the specified level. Ensure the fuel tank is over half full.
- Do not support any loads by the boom (i.e., no pick and carry loads) while traversing a slope.
- Remove all cribbing or other non-standard accessories from the crane.
- Avoid holes, rocks, extremely soft surfaces, and any other obstacles that might subject the crane to undue stresses and possible overturn.
- Conduct all travel with the assistance of a ground person to warn the operator of any changing conditions in the terrain being traversed.

The owner/lessee must take appropriate measures to ensure that all persons operating or working with the affected models are in compliance with The Manitowoc Company, Inc. recommendations. The operator of the crane assumes responsibility for determining the suitability of traveling on a slope. Traveling on a slope should only be attempted under the controlled conditions specified in these guidelines, and must be conducted with the utmost diligence and care to ensure the safety of all personnel performing the operation and/or working around the crane.

Should the operator need to traverse slopes outside the criteria defined in the above guidelines contact The Manitowoc Company, Inc. for further guidance.

Traveling with Elevated Boom

WARNING

Overhead Objects Hazard

Contacting overhead objects while driving the crane may result in death, severe injury, and/or equipment damage. Traveling with the boom elevated should only be attempted under the controlled conditions specified in this section.

Exercise caution whenever driving the crane with the boom elevated. Travel with the boom elevated is permitted if the following steps are followed:

- Limit travel to firm, level surfaces.
- Inspect the route of travel prior to moving the crane. Pay particular attention to any changing conditions in the terrain being traversed. Also, avoid any overhead obstructions.
- Travel must be performed in a controlled fashion.
- Do not exceed a speed of 24 km/h (15 mph).
- Inflate tires to the recommended pressure for travel operations.
- When using the towing attachments, the boom must remain horizontal.
- Fully retract all boom sections.
- Refer to *Traveling with Boom Extension and/or Inserts Erected*, page 3-30 if the boom extension is in the erected position.
- Position the boom over the front of the crane.
- Engage the swing brake and turntable lock pin.
- The hook block may be reeved over the main boom nose. The headache ball may be reeved over the main boom nose or auxiliary boom nose. The block and ball may be suspended below the boom nose. It is also acceptable to secure the block or the ball to the tie down point on the carrier to prevent swinging if necessary.
- Limit boom angle to a maximum of 20°.
- Do not support any load from the boom (see Pick and Carry Load chart for limitations for this application).
- Remove all cribbing or other non-standard accessories from the crane.
- Avoid holes, rocks, extremely soft surfaces and any other obstacles that might subject the crane to undue stresses and possible overturn.
- Ensure adequate clearance to any overhead obstructions that the crane may be required to travel beneath.
- Ensure that all personnel involved in the operation and those working around the crane are aware of any hazards that may be encountered and are trained about how to avoid the hazards.

Reference Only

Traveling with Boom Extension and/or Inserts Erected

10.1 m (33 ft)/17.1 m (56 ft) Extension

Follow the steps below when traveling with the extension erected:

- Position the 10.1 m (33 ft) or 17.1 m (56 ft) boom extension at minimum offset. If traveling with just the 10.1 m (33 ft) extension, stow the stinger section on the boom base section, not on the extension base section.
- Travel only on a firm, level surface.
- Fully retract the main boom.
- Limit main boom angle to a minimum of 0° and a maximum of 40°.
- Do not exceed a speed of 4 km/h (2.5 mph).
- Ensure main counterweight is installed.
- Position the boom over the front of the crane.
- Engage the swing brake and turntable lock pin.
- Remove hook block from main boom nose.
- Headache ball may be reeved over boom extension, hanging 0.9 m (3 ft) below sheave.

10.1 m (33 ft)/17.1 m (56 ft) Extension Plus 6.1 m (20 ft) Insert

Follow the steps below when traveling with the extension and insert erected:

- Position the 10.1 m (33 ft) or 17.1 m (56 ft) boom extension plus 6.1 m (20 ft) insert at minimum offset. If traveling with just the 10.1 m (33 ft) extension and insert, stow the stinger section on the boom base section, not on the extension base section.
- Travel only on a firm, level surface.
- Fully retract the main boom.
- Limit main boom angle to a minimum of 0° and a maximum of 20°.
- Do not exceed a speed of 4 km/h (2.5 mph).
- Ensure main counterweight is installed.
- Position the boom over the front of the crane.
- Engage the swing brake and turntable lock pin.
- Remove hook block from main boom nose.
- Headache ball may be reeved over boom extension, hanging 0.9 m (3 ft) below sheave.

10.1 m (33 ft) Extension Plus 12.2 m (40 ft) Insert

Follow the steps below when traveling with the extension and insert erected:

- Position the 10.1 m (33 ft) boom extension plus 12.2 m (40 ft) insert at the minimum offset. Stow the stinger section on the boom base section, not on the extension base section.
- Travel only on a firm, level surface.
- Fully retract the main boom.
- Limit main boom angle to a minimum of 0° and a maximum of 20°.
- Do not exceed a speed of 4 km/h (2.5 mph).
- Ensure main counterweight is installed.
- Position the boom over the front of the crane.
- Engage the swing brake and turntable lock pin.
- Remove hookblock from main boom nose.
- Headache ball may be reeved over boom extension, hanging 0.9 m (3 ft) below sheave.

Extended Travel

Depending upon the tire manufacturer, the higher inflation pressures normally specified for lifting on rubber are not recommended for site to site transfer over extended distances. The higher static/creep 8 km/h (5 mph) inflation pressures may remain in the tire while operating the crane on site within a distance of less than 6.4 km (4 mi).

CAUTION

Tire Damage!

For extended travel, check the cold tire pressure prior to start. (Refer to tire inflation chart in Load Chart Book.) After every one hour of travel time, regardless of ambient temperature, stop and allow the tires to cool off for at least 30 minutes. At the destination, the tires must be allowed to cool to ambient temperature before crane lifting on rubber.

Traveling — Forward

CAUTION

Machine Damage!

Engage the turntable lock pin for extended travel. Failure to engage the lock pin may allow the superstructure to swing uncontrolled, damaging the machine and/or property.

1. With the Transmission Shift Lever in the neutral (N) position, start the engine and allow it to adequately warm up.
2. Depress the Service Brake Foot Pedal.

Reference Only

WARNING

Run-away Crane Hazard!

Releasing the parking brake while the low service brake pressure indicator is illuminated and the buzzer is sounding, indicating the service brakes are inoperable, may result in the crane rolling away freely without the ability of the operator to stop the crane.

Never release the parking brake while the low service brake pressure indicator is illuminated and the buzzer is sounding.

3. Disengage the parking brake.
4. Position the Drive Axle Switch to either two-wheel high or four-wheel low.

CAUTION

Use four-wheel drive only when more traction is required.

5. Lift Transmission Shift Lever up out of its detent and push the lever to the forward (F) position, then rotate the Transmission Shift Lever Knob to the first (1) gear position. The gear selection “F1” will appear in the LCD Display to indicate that forward propulsion and first (1) gear have been selected; if the Service Brake Foot Pedal is not depressed prior to shifting to a gear, the gear selection will flash in the LCD Display until the Transmission Shift Lever is returned to the neutral (N) position and the transmission will not shift.
6. Release the Service Brake Foot Pedal and depress the Foot Throttle Pedal until maximum first gear speed is attained, then rotate the Transmission Shift Lever Knob to the second (2) gear position to continue to increase speed. For additional speed, continue shifting to a higher gear.

CAUTION

Possible Machine Damage!

Do not downshift to a lower gear if the road speed is greater than the maximum speed of the lower gear.

Traveling — Reverse

Traveling in reverse is accomplished the same way as traveling forward, except for shifting the Transmission Shift Lever to reverse (R). Refer to *Traveling — Forward*, page 3-30.

Traveling — Towing/Pulling

CAUTION

Machine Damage!

Manitowoc recommends towing or pulling another vehicle with the optional pintle hook (if equipped) or by attaching at a point no higher than the pintle hook height, or severe damage may occur to the drivetrain.

Do not tow or pull by attaching to the tie-down lugs unless the attaching point is no higher than the pintle hook height.

Use four-wheel drive when greater traction is necessary to avoid severe damage to the drivetrain.

Should the crane become mired down, use a tow truck or tractor to free the vehicle. Severe damage to the drivetrain may occur if the operator attempts to free the crane unassisted.

To avoid severe damage to the drive train while using the crane to tow or pull another vehicle, follow these recommendations:

- Ensure the boom is in a horizontal position and not elevated above 0°.
- Ensure the outrigger beams and stabilizers are fully retracted with the floats properly stowed.
- Tow or pull on open ground when possible.
- Connect to the optional pintle hook (if equipped) or attach cables/straps to the crane at a point no higher than the pintle hook height.
- Use four-wheel drive when greater traction is necessary. (Refer to *Four-Wheel Drive Operation*, page 3-33 for operating instructions.)
- Should the crane become mired down, use a tow truck or tractor to free the vehicle. Severe damage to the drivetrain may occur if the operator attempts to free the crane unassisted.
- Conduct all travel with the assistance of a ground person to warn the operator of any changing conditions in the terrain being traversed.

Reference Only

Traveling — Being Towed/Pulled

Manitowoc recommends connecting to a pintle hook (if equipped) or evenly attaching to the tie-down lugs when being towed by another vehicle.,

CAUTION

Machine Damage!

It is recommended to attach cables/straps to the optional pintle hook (if equipped) or evenly attach to the tie-down lugs if being towed by another vehicle.

Should the crane become mired down, use a tow truck or tractor to free the vehicle. Severe damage to the drivetrain may occur if the operator attempts to free the crane unassisted.

- Ensure the boom is in a horizontal position and not elevated above 0°.
- Ensure the outrigger beams and stabilizers are fully retracted with the floats properly stowed.

To avoid severe damage to the drive train while the crane engine is disabled:

- Disconnect drivelines.
- Disengage parking brake by manually turning parking brake adjustment until axle turns free.

DANGER

Run-away Crane Hazard!

Disabling the parking brake may result in the crane rolling away freely without the ability of the operator to stop the crane.

Ensure wheel chocks are properly placed when parking crane with the parking brake disabled.

Death or serious injury and damage to machinery could result from moving machinery.

- Secure steering to prevent turning while towing.
- Conduct all travel with the assistance of a ground person to warn the operator of any changing conditions in the terrain being traversed.

CAUTION

Possible Machine Damage!

Apply service brakes and bring crane to a complete stop before shifting transmission into reverse.

Steering

Steering is accomplished by the steering wheel and the rear steer control. These controls, used singly or together, provide front wheel steering, rear wheel steering, four-wheel steering, and crabbing capabilities (Figure 3-16).

Front Wheel Steering

Conventional front wheel steering is accomplished with the steering wheel. This method of steering should always be used when traveling at higher speeds.

WARNING

Unexpected Operation Hazard!

Operate the rear steer ONLY at slow speeds for added job site maneuverability.

Rear Wheel Steering

Rear wheel steering is controlled by the Rear Steer Control Switch. Moving the control switch to the desired position activates the rear steer cylinders, thereby steering the crane in the selected direction.

Four Wheel Steering

Four wheel steering is accomplished with the steering wheel and the Rear Steer Control Switch. Depending upon which direction the operator wishes to travel, the steering wheel is turned opposite direction of the Rear Steer control position. This allows the crane to turn or maneuver in close, restricted areas.

Crabbing

Crabbing is accomplished with the steering wheel and the Rear Steer Control Switch. Depending upon which direction the operator wishes to travel (crab), the steering wheel is turned in the same direction as the Rear Steer Control Switch. This permits driving the crane forward or backward in a crabbing manner.

Reference Only

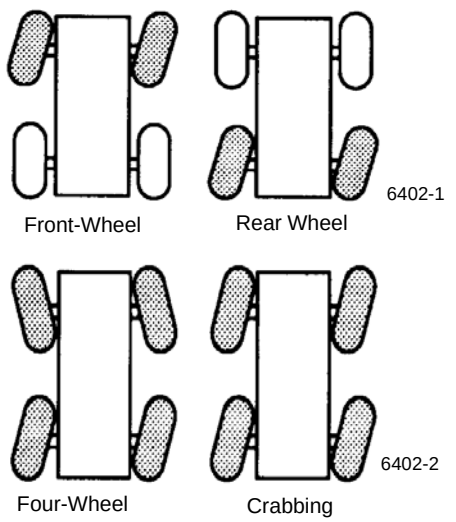

FIGURE 3-16

Four-Wheel Drive Operation

If more traction is required due to slipping or spinning wheels, engage the front axle drive as follows:

CAUTION

Machine Damage!

Do not tow or pull in 1st gear with the Drive Axle Selector Switch in two-wheel drive position. Severe damage to the drive train will result. Always engage four-wheel drive.

CAUTION

Possible Machine Damage!

Before shifting from two-wheel drive to four-wheel drive (or from four back to two), crane travel must be stopped.

1. Stop the crane by depressing the Service Brake Foot Pedal.
2. Position the Transmission Shift Lever to the neutral (N) position.
3. Position the Drive Axle Selector Switch to four-wheel low.

NOTE: If Drive Axle Selector Switch is positioned to four-wheel low, the Service Brake Foot Pedal is not depressed, and the Transmission Shift Lever is not in neutral (N) position, the Four-Wheel Drive Indicator will flash and four-wheel drive function will not engage.

4. Select gear speed and direction of travel using the Transmission Shift Lever and Knob.
5. Drive the crane as described under *Traveling — Forward*, page 3-30.
6. Return the Drive Axle Selector Switch to the two-wheel high position as soon as two-wheel traction will suffice and crane motion has stopped; again, the Service Brake Foot Pedal must be depressed and the Transmission Shift Lever must be in the neutral (N) position to shift from four-wheel low to two-wheel high.

Differential Lock Operation (Optional)

CAUTION

Unintended Operation!

When using the differential lock, steering characteristics may be affected.

Try to use four-wheel drive to gain adequate traction before using the differential lock.

Do not operate the differential lock when traveling downhill; at speeds above 10 mph; on hard, dry surfaces; and/or during axle spin-out.

NOTE: The differential lock will not operate unless the Drive Selector Switch is in the four-wheel low position.

General

The purpose of the differential lock is to provide maximum traction and control on poor road or highway surfaces. When the differential locks are actuated, the clutch collar completely locks the differential case, gearing, and axle shafts together, maximizing traction to both wheels of each axle. The lock position also protects against spinout. When normal driving conditions exist (during periods of good traction), differential locks should not be actuated. Axles should be allowed to operate with differential action between both wheels.

Follow steps below when engaging/disengaging the differential lock function.

1. Lock differentials by pressing and holding the Axle Differential Control Switch in the lock position; disengage the function by releasing the switch.
2. Lock/unlock differentials only when vehicle is standing still or moving at a constant low speed with wheels not slipping.

Reference Only

CAUTION

Possible Machine Damage!

When driving on hard, dry surfaces with the differentials locked, do not turn the wheels. Damage to the drive line components can result.

Do not lock the differentials when the wheels are slipping. Damage to the differentials can result.

3. Locked differentials cause the crane's turning radius to increase, creating an understeer condition; use caution, good judgement and drive at low speeds when operating the vehicle with locked differentials.

4. Lock the differentials only when maximum traction is needed on poor road or highway surfaces.

CAUTION

Possible Loss of Vehicle Stability!

Do not lock the differentials when the vehicle is traveling down steep grades and traction is minimal.

5. Always unlock the differentials when the need for maximum traction has passed or when traveling on good road or highway surfaces.

Operation

The differential lock function should preferably be engaged when the crane is stationary but may be engaged when moving, if the following conditions are met:

1. The crane is moving very slowly (creep speed).
2. The wheels are not spinning at the time of engagement.

When traveling with differentials locked, do not deviate from a straight path more than absolutely necessary. Engage differential locks by doing the following:

1. Position Axle Differential lock Control Switch to the locked position with crane stationary or moving at slow speed.

   If moving at a slow speed, let up momentarily on the Foot Throttle Pedal to relieve torque on the differential gearing. This will fully engage the differential locks.

NOTE: When the differentials are locked, the Axle Differential Locked Indicator illuminates.

2. Proceed over the poor road condition cautiously.

When the adverse condition has passed, disengage the differential locks by doing the following:

1. Release the Axle Differential Lock control switch, allowing it to return to the unlocked position while maintaining a slow speed.
2. Let up momentarily on the Foot Throttle Pedal to relieve torque on the differential gearing, allowing the differential to fully unlock.

NOTE: When differentials are unlocked, the Axle Differential Locked Indicator will not be illuminated.

3. Resume driving at a normal speed using good driving judgement.

Axle Oscillation Lockouts Operation

The following procedure should be used to periodically check the axle oscillation system and ensure that it is in proper working condition.

1. Ensure the tires are inflated to the recommended pressure. Refer to the *Load Chart Book* in the crane cab for proper inflation pressures.
2. With the hook unloaded, the boom fully retracted and centered over the front at no more than a 10° to 15° boom angle, position the crane on a block or curb so that one rear tire is approximately 15 to 30 cm (6 to 12 in) above the level of the opposite tire.
3. Slowly swing the superstructure to the left or right until the axle oscillation lockout valve is activated. This will lock the rear axle out of level. Do not swing beyond the tire track.
4. After engaging the swing brake, slowly drive off of the block or curb and stop. The rear tires should both be touching the road surface and the opposite front tire should be light or slightly off the road surface.
5. Release the swing brake and swing the superstructure until it is centered over the front.

DANGER

Tipping Hazard!

Do not operate the crane if the axle oscillation lockout system is not functioning properly.

Failure to comply with this warning may result in death or serious injury.

If the axle oscillation lockout valve is functioning properly, the crane will re-level itself; if the valve is not working properly, the crane will not re-level itself. If the rear axle does not lock or unlock properly, evaluate the lockout system and repair as necessary.

Reference Only

General Crane Operation

Pump Drive

The main hydraulic pumps are mounted on the torque converter drive pad. The pumps operate any time the engine is running.

Control Lever Operation

The control lever operation for all crane functions is standard, i.e. the closer the lever is to neutral (center), the slower the system responds. The control lever should be returned to neutral to hold the load. Never feather the hoist control lever to hold the load.

NOTE: Always operate control levers with slow, even pressure.

Preload Check

After the crane has been readied for service, an operational check of all crane functions (with no load applied) should be performed. The Preload Check is as follows:

NOTE: Operate engine at or near governed RPM during preload check of crane functions.

Carefully read and become familiar with all crane operating instructions before attempting a preload check or operating the crane under load.

1. Extend and set outriggers.
2. Raise, lower, and swing the boom a minimum of 45° right and left.
3. Telescope the boom in and out.
4. Raise and lower the cable a few times at various boom lengths. Ensure there is no kinking.

Using Your Load Chart

NOTE: One of the most important tools of every crane is the Load Chart found in the crane operator cab.

The Load Chart contains a large amount of information, which must be thoroughly understood by the operator.

The Load Chart contains outrigger capacity charts for fully extended, mid extended outriggers for the main boom and boom extension, and fully retracted outrigger beams for main boom only. In addition, the Load Chart contains two on-rubber capacity charts: 360° stationary, and pick and carry over front.

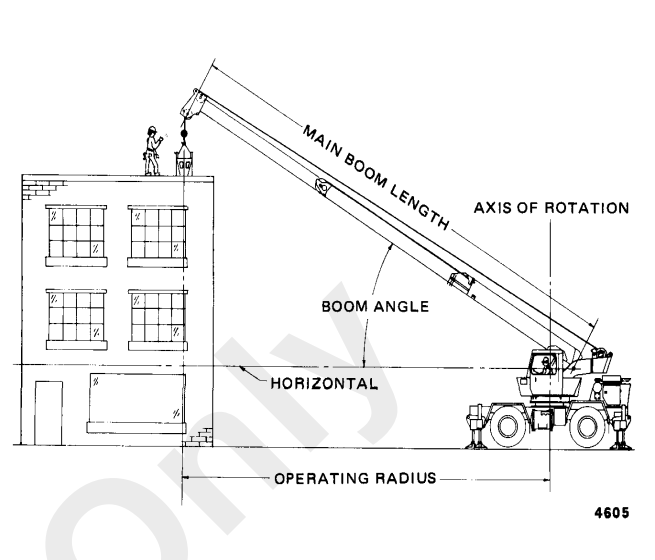

FIGURE 3-17

The Load Charts are divided into structural strength and stability limits. This is shown by the bold line across the chart. Capacities above the line are structural strength limits and capacities below the line are stability limits.

The left column is the load radius, which is the distance from the center of crane rotation to the load center of gravity. The top row lists various boom lengths ranging from fully retracted to fully extended or boom extension lengths and offsets. The number at the intersection of the left column and top row is the total load capacity for that load radius and boom length or boom extension lengths offset. The number in parentheses below the total load capacity is the required boom angle (in degrees) for that load. When the boom length or lift radius or both are between values listed, the smallest load shown at either the next larger radius or next longer or shorter boom length shall be used.

Another important section is the range diagram. The range diagram shows the operating radius and tip height that can be achieved at a given boom length and angle. If the operator knows the radius and tip height required for a specific lift, the angle and boom length can be quickly determined from the range diagram. Or, if the boom length and angle are known, the tip height and operating radius can be quickly determined.

A lifting diagram is included to describe over side, over rear, and over front lifting areas. The lifting area diagram shows that the locations of the outrigger jack cylinders in the fully extended position are used to mark the boundaries of the lifting areas.

A boom extension capacity chart and notes are included to list the capacities for the extension length, load radius, and boom angle.

Reference Only

Another section contains the notes for lifting capacities. Be sure to read and understand all the notes concerning lifting capacities.

The load chart also gives weight reductions for load handling devices such as hook blocks, headache balls, boom extensions, etc., which must be taken into consideration as part of the load. Remember, the weight of any other load handling devices such as chains, slings, or spreader bars must be added to the weight of the load.

Proper Leveling of the Crane

ASME B30.5 specifies that if a crane is not level within 1% of grade, the allowable capacities must be reduced. Therefore, whether lifting on rubber or outriggers, it is essential that the crane is level to within 1% of grade. The bubble level that is provided on the crane is calibrated to be accurate within 1% of grade.

To properly level the crane, the boom must be positioned over the front of the crane, fully lowered to horizontal and fully retracted (for cranes fitted with a boom rest, the boom shall be stowed onto the rest). Raise and level the crane using the outriggers; refer to *Setting the Outriggers*, page 3-36.

A working crane may settle during lifting operations. Frequently check the crane for level. When rechecking the crane for level, the boom must be positioned over the front of the crane, fully lowered to horizontal and fully retracted (for cranes fitted with a boom rest, the boom shall be stowed onto the rest). If necessary, relevel the crane using the procedures under *Setting the Outriggers*, page 3-36.

Bubble Level Adjustment

The bubble level adjustment should be checked periodically; if it is suspected that the bubble level indicator is out of adjustment, verify and adjust the bubble level as follows:

1. Locate the crane on a firm, level surface.
2. Extend and set the outriggers. Level the crane, as indicated by the bubble level indicator, using the outriggers.
3. Place a miracle pointer level, carpenter level, or similar type device on a machined surface such as the turntable bearing or bearing mounting surfaces.
4. Using the outriggers, level the crane as indicated on the leveling device used in step 3.
5. Using the bubble level indicator mounting screws, adjust the bubble level indicator to show level.

Crane Functions

Setting the Outriggers

1. Engage the Parking Brake.

NOTE: The Parking Brake must be engaged to enable outrigger functions.

2. Position the outrigger floats directly out from each outrigger to where the outriggers will be properly extended.

CAUTION

Possible Machine Damage!

Always depress one of the outrigger/selector switches before positioning the outrigger extension/retraction switch to extend or retract. Failure to do this may cause a hydraulic lock against the individual solenoid valves, preventing them from opening.

DANGER

Electrocution Hazard!

To avoid death or serious injury, keep all parts of this machine, the rigging, and materials being lifted at least 20 feet away from electrical power lines and equipment.

3. If extending the outrigger to the mid-extend or fully extended position, depress the desired Extension Switch on the Outrigger Selector Panel and hold the Outrigger Extension/Retraction Switch to EXTEND. The appropriate outrigger beam begins to extend. Refer to *Engaging the Mid-Extend Lock Pin*, page 3-37 if the crane is to be operated with any outrigger at the mid-extend position.

DANGER

Tipping Hazard!

All four outrigger beams must be deployed to one of three positions before beginning operation, which include fully retracted, mid-extend, or fully extended; do not operate the crane with the outriggers in any other position.

NOTE: More than one outrigger beam can be extended at a time. However, to ensure that each outrigger is fully extended, repeat step 3 for each outrigger after a multi-outrigger extension.

4. After deploying the four outrigger beams to one of the three proper positions (fully retracted, mid-extend, fully extended), depress the desired Stabilizer Switch on the

Reference Only

Outrigger Selector Panel and hold the Outrigger Extension/Retraction Switch to EXTEND. The appropriate jack cylinder begins to move.

Extend each jack cylinder, positioning the float as necessary, until the locking levers of the float engage the jack cylinder barrel.

NOTE: More than one jack cylinder can be extended at a time.

5. Extend front jack cylinders approximately 8 to 10 cm (3 to 4 in).

6. Extend rear jack cylinders approximately 8 to 10 cm (3 to 4 in).

NOTE: If crane is equipped with tilting cab, ensure cab is in the lowered position before leveling machine.

7. Repeat step 4 until all wheels are clear of the ground and the crane is level as indicated by the bubble level indicator located on the right side of the cab.

NOTE: If it is suspected that the bubble level indicator is out of adjustment, verify and adjust the bubble level using the procedures under *Bubble Level Adjustment*, page 3-36.

DANGER

Tipping Hazard!

The mid-extend outrigger beam lock pin must be engaged before operating on any beam from the mid-extend position.

For cranes not equipped with an Outrigger Monitoring System, the operator must select the proper load chart and RCL program for the outrigger position selected.

NOTE: For cranes equipped with an Outrigger Monitoring System, outrigger positions are automatically monitored through the RCL. Refer to *Outrigger Monitoring System (OMS) (Optional—Standard in North America)*, page 3-37.

Outrigger Monitoring System (OMS) (Optional—Standard in North America)

The Outrigger Monitoring System (OMS) aids the operator in accurately programming the Rated Capacity Limiter (RCL) by automatically identifying the horizontal position of each outrigger beam. The OMS uses four sensors, one per outrigger beam, to indicate when an outrigger beam is positioned to one of three pre-defined locations, including fully retracted, mid-extend, and fully extended.

Set up of the outriggers is the same for cranes equipped with OMS; refer to *Setting the Outriggers*, page 3-36.

If the crane is setup on outriggers and “On Outriggers” is chosen when programming the RCL (Figure 3-18), then the OMS indicates to the RCL the horizontal position of each of the four outrigger beams. Based on this information, the RCL will default to the most conservative outrigger beam configuration; that is, if three outriggers are fully extended and one is retracted, the RCL will select retracted as the outrigger configuration. A confirmation of this outrigger configuration is all that is needed (Figure 3-19). Refer to the *Rated Capacity Limiter Operator Handbook* for detailed instructions.

NOTE: Figure 3-19 depicts all four outrigger beams in the mid-extend position as indicated by the OMS and RCL.

8127-1 **FIGURE 3-18**

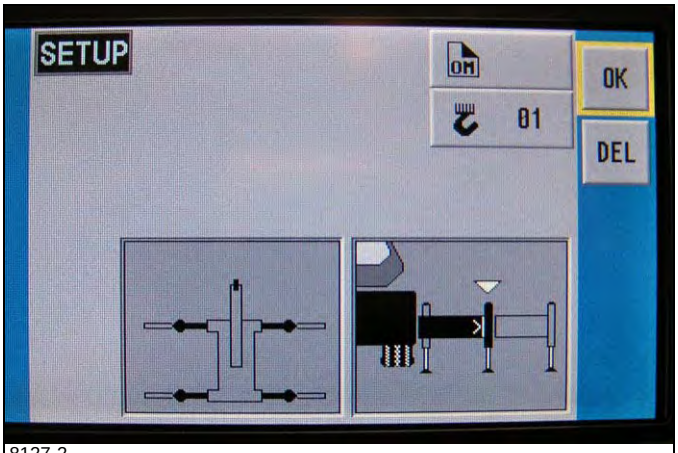

8127-2 **FIGURE 3-19**

Engaging the Mid-Extend Lock Pin

1. Turn the locking pin 90° from its stowed position and allow the pin to rest on top of the outrigger beam.

NOTE: It may be necessary to jog the outrigger extension/retraction switch slightly to ensure proper pin engagement.

Reference Only

2. Slowly extend or retract the outrigger beam, allowing the locking pin to drop into the hole in the top of the outrigger beam, engaging the outrigger beam at the desired length.

Stowing the Outriggers

1. Select the rear jack cylinders with the Stabilizer Selector switches and hold the Extension/Retraction switch to RETRACT until the rear jack cylinders have retracted several inches.
2. Select the front jack cylinders with the Stabilizer Selector switches and hold the Extension/Retraction switch to RETRACT until the front jack cylinders have retracted several inches.
3. Repeat steps 1 and 2 until the crane is resting on all four wheels and the jack cylinder floats are several inches off the ground

CAUTION

Crushing Hazard!

Keep feet and hands clear of floats when unlocking the floats from the jack cylinders.

NOTE: Each jack cylinder float weighs approximately 32 kg (70 lb).

4. Release the locking levers and allow the floats to drop to the ground.
5. Continue to retract the jack cylinders until they are fully retracted.
6. Depress the desired Extension rocker switch on the Outrigger Selector panel and hold the outrigger Extension/Retraction rocker switch to RETRACT. The appropriate outrigger beam should begin to retract.

NOTE: More than one outrigger may be retracted at one time.

7. After all outriggers have been fully retracted, stow the outrigger floats.

Stowing the Mid-Extend Lock Pin

1. Lift the lock pin and turn it 90° to its stowed position.

NOTE: If the lock pin is wedged in the hole in the outrigger beam, it may be necessary to jog the outrigger extension/retraction switch slightly while pulling upward on the pin.

2. Retract the outrigger extension/retraction cylinder.

Swinging the Boom

DANGER

Crushing Hazard!

Death or serious injury could result from being crushed by moving machinery. Before activating swing, sound the horn and verify that all personnel are clear of rotating and moving parts.

Keep the area beneath the boom clear of all obstructions and personnel when lowering the boom.

The operator must select the proper load chart and RCL program for the outrigger position selected.

CAUTION

Possible Machine Damage!

Never push or pull the swing control lever through neutral to the opposite direction to stop swing motion. Use the swing brake foot pedal to stop swing rotation.

NOTE: Automatic rear axle oscillation lockout will activate when the boom swings right or left of the crane centerline.

To swing the boom, the SWING control lever is pushed forward, away from the operator, to swing CLOCKWISE, or pulled back, toward the operator, to swing COUNTERCLOCKWISE. Always operate the control lever with a slow, even pressure. Use the swing brake foot pedal to stop rotation, then position the swing brake switch to ON to prevent further rotation.

Elevating the Boom

DANGER

Crushing Hazard!

Keep the area above and below the boom clear of all obstructions and personnel when elevating the boom.

To elevate the boom, pull the BOOM (lift) control lever back, toward the operator, and hold until the boom reaches the desired elevation level.

Reference Only

Lowering the Boom

DANGER

Crushing and/or Tipping Hazard!

Keep the area beneath the boom clear of all obstructions and personnel when lowering the boom.

Long cantilever booms can create a tipping condition, even when unloaded and in an extended, lowered position.

CAUTION

Possible Machine Damage!

When lowering the boom, simultaneously let out the hoist cable to prevent two-blocking the boom nose and hook block.

The closer the load is carried to the boom nose, the more important it becomes to simultaneously let out the hoist cable as the boom is lowered.

To lower the boom, push the Boom Control Lever forward, away from the operator, and hold until the boom is lowered to the desired position.

Extending the Boom

DANGER

Tipping Hazard!

Before extending the boom with a load, check the *Load Chart* for the maximum load allowed at a given radius, boom angle, and length.

CAUTION

Possible Machine Damage!

Before extending the boom, ensure the large access cover on top of the boom base section is installed.

When extending the boom, simultaneously let out the hoist cable to prevent two-blocking the boom nose and hook block.

For normal crane operation, ensure the Boom Manual/ Automatic Mode Selector Switch is positioned to automatic mode and the Boom A/B Mode Selector Switch is set to the desired boom telescoping mode.

If crane is not equipped with an auxiliary hoist, push the Boom In/Out Control lever forward, away from the operator, to extend the boom.

If crane is equipped with an auxiliary hoist, push on the top of the Telescope Control Foot Pedal to extend the boom.

Retracting the Boom

WARNING

Crushing Hazard!

When retracting the boom, the load will lower unless the hoist cable is taken in at the same time

For normal crane operation, ensure the Boom Manual/ Automatic Mode Selector Switch is positioned to automatic mode and the Boom A/B Mode Selector Switch is set to the desired boom telescoping mode.

If the crane is not equipped with an auxiliary hoist, pull the Boom In/Out Control lever rearward, toward the operator, to retract the boom.

If crane is equipped with an auxiliary hoist, push on the bottom of the Telescope Control Foot Pedal to retract the boom.

Retracting the Boom Using the Boom Recovery Mode

The boom recovery mode is only to be used to recover the boom in the event of a failure in the boom control system and must not be used to continue normal craning operations.

If the boom stops telescoping in and out, and the Boom Recovery Mode Indicator is flashing, the boom can be retracted by performing the following procedure.

NOTE: The Electrical System Diagnostic Indicator (11, Figure 3-6) on the steering column will flash while the Recovery Mode is active.

1. Set the Boom Recovery Mode Switch to the On position (slide integral lock up and press bottom of switch). The Boom Recovery Mode Indicator will illuminate continuously.
2. Set the Boom Manual/Automatic Mode Switch to the manual mode position (press top of switch).
3. Set the Boom Section 1/Section 2 Selector Switch to either section 1 or section 2.
4. Retract the boom using the procedure under *Retracting the Boom*, page 3-39.
5. Once the boom has been retracted, set the Boom Recovery Mode Switch to the Off position (press top of switch).
6. Position the boom in the normal travel position.
7. Stop the engine and secure the crane until the failure in the boom control system has been corrected.

Reference Only

Lowering and Raising the Hoist Cable

WARNING

Crushing Hazard!

Keep the area beneath the load clear of all obstructions and personnel when lowering or raising the cable (load).

Do not jerk the control lever when starting or stopping the hoist. Jerking the lever causes the load to bounce, which could result in possible damage to the crane.

NOTE: When the load is stopped at the desired height, the automatic brake will engage and hold the load as long as the control lever remains in neutral.

Lowering the Cable

Push the Main or Aux hoist control lever forward, away from the operator, and hold until the hook or load is lowered to the desired height.

Raising the Cable

Pull the Main or Aux hoist control lever back, toward the operator, and hold until the hook or load is raised to the desired height.

Hoist Speed Range Selection

CAUTION

Possible Machine Damage!

Do not change the hoist speed range with the hoist rotating.

To change the speed range of the hoist(s), position the applicable switch (Main Hoist Speed or optional Aux Hoist Speed) to HIGH or LOW as applicable

Operational Aids

WARNING

Unexpected Operation Hazard!

Electronic equipment on this crane is intended as an aid to the operator. Under no condition should it be relied upon to replace the use of capacity charts and operating instructions. Sole reliance upon these electronic aids in place of good operating practices can cause an accident.

Rated Capacity Limiter (RCL) System

The Rated Capacity Limiter (RCL) is an electro-mechanical sensing system designed to alert the crane operator of impending capacity when the system has been properly preset by the operator. The control panel is mounted in the front console of the operator cab. When an overload condition is sensed, the system provides the operator with a visual and audible warning, and locks out the control levers to prevent lowering the boom, extending the boom, or raising the main or auxiliary hoist cables.

Three additional features are included within the RCL system:

- Swing Angle Set Limitation
- Work Area Definition
- Anti-two Block Device

Swing Angle Set Limitation allows left and right swing angle to be preset. When the preset angle is reached, the system will provide an audible warning.

Work Area Definition allows the crane operator to describe the crane's working area by setting up "virtual walls". They are referred to as virtual walls because they exist in the system and are not real walls. The virtual walls represent obstacles (i.e. buildings, towers, poles, etc.) in the crane's working range. They are set by defining points along the outer limits of the working area with the tip of the boom. Once the working area has been defined, the system will provide a visual and an audible warning if the boom approaches a virtual wall.

CAUTION

Possible Machine Damage!

When defining virtual wall(s), always allow a safe working distance to any obstacles. Never work outside a safe working area as defined by common practice, standards, and manuals.

WARNING

Risk of Unexpected Operation!

There are no machine cutouts associated with the swing angle set limitation or the work area definition features.

An Anti-Two Block Device is also incorporated into the system to prevent the hook block or headache ball from coming into contact with the boom nose or boom extension. This condition will cause a lockout of hoist up, boom down, and telescope out, and also provide a visual and an audible alarm.

Refer to the RCL Operator Handbook for more detailed information on the function of the RCL system.

Reference Only

Control Lever Lockout System

The control lever lockout system consists of hydraulic solenoid valves (located in the directional control valves) which are in series between the hydraulic remote control valves in the cab and the pilot-operated directional control valves. When the valves are actuated, they prevent pilot flow between the hydraulic remote control valve in the cab and the appropriate directional control valve. The valves are activated in such a manner as to prevent worsening the condition, i.e. boom down, telescope out, or hoist up. The control lever lockout system is used with the anti-two-block system or the rated capacity limiter (RCL) system.

Stowing and Parking

WARNING

Tipping Hazard!

Never park the crane near holes, or on rocky or extremely soft surfaces. This may cause the crane to overturn, resulting in injury to personnel.

When parking the crane, do the following:

1. Park crane on a stable surface.
2. Remove load from the hook.
3. Stow the swingaway boom extension, if erected.
4. Fully retract boom and position it in the normal travel position.
5. Engage swing brake and/or swing lock pin.
6. Retract all jack cylinders and outrigger beams.
7. Apply parking brake.
8. Place all operating controls in their neutral position.
9. Position Crane Function switch to OFF.
10. Shut down engine following proper procedures specified in this manual and applicable engine manual.
11. Remove keys.
12. Close and lock all windows, covers, and doors.

CAUTION

Risk of Undesirable Operation!

To avoid possible engine fault codes and undesirable operation, ensure the keyswitch has been off two minutes before disconnecting the batteries.

Disconnect batteries, if machine will be inactive for over 24 hours.

13. Turn Battery Disconnect to OFF position (shown) if machine will be inactive for over 24 hours (Figure 3-20).

7693-2 **FIGURE 3-20**

Unattended Crane

WARNING

Tipping Hazard!

Changing weather conditions including but not limited to: wind, ice accumulation, precipitation, flooding, lightning, etc. should be considered when determining the location and configuration of a crane when it is to be left unattended.

Failure to comply with these instructions may cause death or serious injury.

The configuration in which the crane should be left while unattended shall be determined by a qualified, designated individual familiar with the job site, configuration, conditions, and limitations.

Reference Only

This Page Blank

Reference Only

SECTION 4
SET-UP AND INSTALLATION

SECTION CONTENTS

General 4-1
Accessing the Hoist Area (Fixed counterweight units only) 4-1
Travel Configuration 4-1
Working Position 4-2
Installing Cable on the Hoist 4-2
Cable Reeving 4-2
Boom Cable Reeving 4-3
Dead-End Rigging/Wedge Sockets 4-3
Installing Wedge and Socket 4-3
Erecting and Stowing the Bi-fold Boom Extension. 4-8
Description 4-8
Boom Extension Rigging Mode 4-8
Erecting the Boom Extension 4-8
Stowing the Boom Extension. 4-15
Setting the Folding Swingaway Offset. 4-17
Erecting and Stowing the Bi-fold Boom Extension with the 6.1 m (20 ft) Insert 4-18
Erecting 4-18
Stowing 4-20
Fixed Counterweight 4-21
Description. 4-21
Maintenance 4-21
Removable Counterweight (Optional) 4-23
Removal. 4-23
Installation 4-23

GENERAL

This section provides procedures for installing the hoist cable on the hoist drum, cable reeving, and erecting and stowing the boom extension.

ACCESSING THE HOIST AREA (FIXED COUNTERWEIGHT UNITS ONLY)

Configure the hoist access area from the Travel Position (Figure 4-1) to the Working Position (Figure 4-2).

DANGER

Platform must not be used for hauling passengers as death or serious injury could occur.

No storage of components are allowed on the platform.

Only one person at a time is allowed on the platform.

Travel Configuration

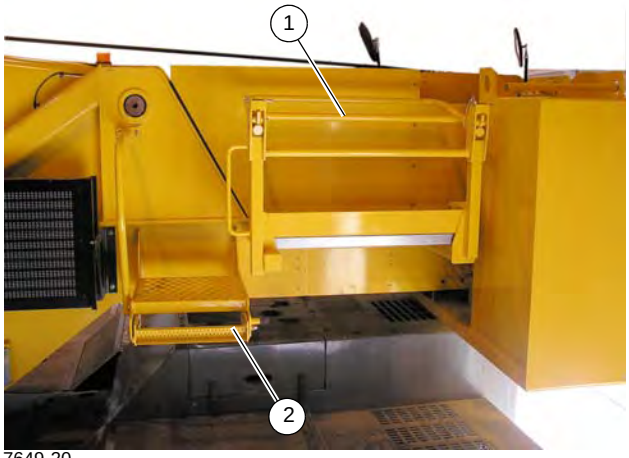

7649-20

FIGURE 4-1

1. Railing (1) (Figure 4-1) is in the pinned and down position.
2. Pull the step locking pin out, slide the step (2) in to the travel position and release the lock pin to secure the step in travel position.

Reference Only

Working Position

Place the hoist access platform hand rail (1) (Figure 4-2) and step (2) (Fixed counterweight units only) into the working position:

1. Pull out on the step locking pin (1) (Figure 4-2), slide the step (2) out to the working position and release the locking pin into the locking hole.
2. Remove two locking pins from hand rail (3) and rotate it up into the working position, reinstall pins.

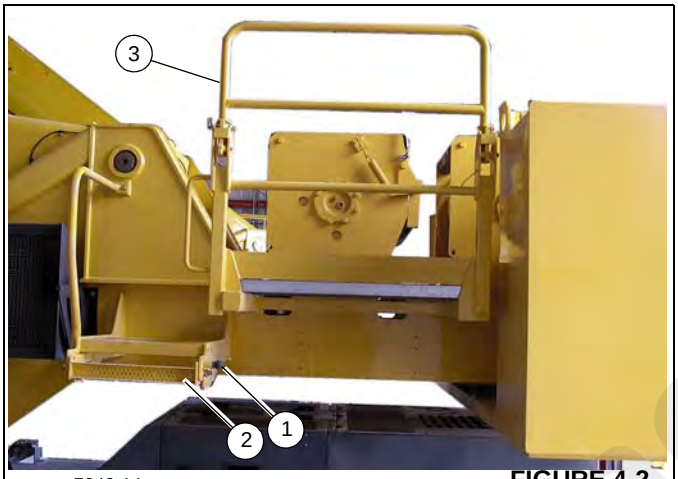

7649-14 FIGURE 4-2

INSTALLING CABLE ON THE HOIST

CAUTION

If cable is wound from the storage drum, the reel should be rotated in the same direction as the hoist.

NOTE: The cable should preferably be straightened before installation on the hoist drum.

Install cable on the hoist drum in accordance with the following procedure.

1. Position the cable over the boom nose sheave and route to the hoist drum.
2. Position the hoist drum with the cable anchor slot on top.

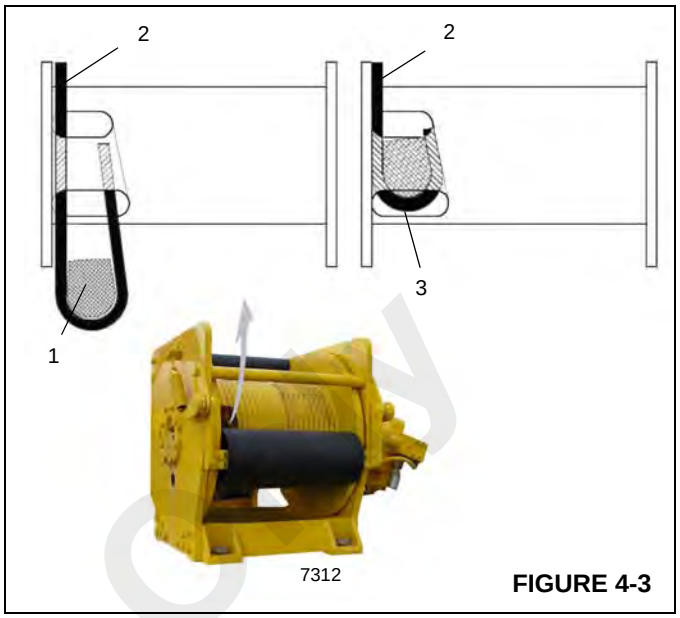

7312 FIGURE 4-3

3. Insert the cable through the slot and position around the anchor wedge (1) (Figure 4-3).

NOTE: The end of the cable should be even with the bottom of the slot for the anchor wedge (1).

4. Position the anchor wedge in the drum slot; pull firmly on the free end (2) of the cable to secure the wedge.

NOTE: If the wedge does not seat securely in the slot, carefully tap (3) the top of the wedge with a mallet.

7196

5. Slowly rotate the drum, ensuring the first layer of cable is evenly wound onto the drum.
6. Install the remainder of the cable, as applicable.
7. Return the hoist access platform to the travel configuration (Figure 4-1) when finished working in this area.

CABLE REEVING

NOTE: There are two types of cable (wire rope) available on this crane; 6 x 37 and 35 x 7 (rotation resistant).

Within the limits of the load and range charts and permissible line pull, multi-part lines allow the operator to raise a greater load than can be raised with a single part line. Various cable reeving (part line) is possible with the boom nose and hook

Reference Only

block, Figure 4-7 and Figure 4-8. This reeving should be accomplished by a qualified rigger using standard rigging procedures.

In order to quick reeve the hook block without removing the wedge socket on the end of the cable refer to Figure 4-4.

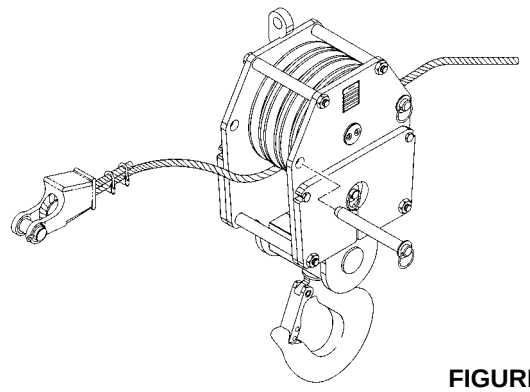

FIGURE 4-4

Boom Cable Reeving

When reeving the boom, always reeve the main hoist wire rope through the rope grab; if also reeving the auxiliary hoist rope, reeve the auxiliary hoist rope outside of the rope grab.

DEAD-END RIGGING/WEDGE SOCKETS

Wedge socket assemblies are popular rigging accessories and have been successfully used for decades to terminate wire ropes on mobile cranes. A wedge socket assembly is easily installed and dismantled but it must be installed and used correctly. It is essential to use only a wedge and socket of the correct size for the rope fitted. Failure to do so may result in the rope pulling through the fitting.

Since state and local laws may vary, alternate attachment methods may be necessary depending upon work conditions. If alternate methods are selected, the user is responsible and should proceed in compliance with the regulations in force. If there are any questions, contact your local Manitowoc distributor or Manitowoc Crane Care

Do not mix components from different manufacturers. The selection, installation and use of a wedge socket assembly must be in accordance with the requirements of the wedge socket manufacturer and the wire rope manufacturer upon whose wire rope the wedge socket assembly will be used.

Grove specifies the size, type, class and line pulls for wire rope, predominately rotation resistant wire rope, and rigging accessories such as overhaul balls and hook blocks for use with each new crane that it manufactures. Other wire ropes and rigging accessories are available from various vendors. Different wire rope manufacturers have differing requirements for the construction, handling, cutting, seizing, installation, termination, inspection and replacement of the wire ropes they produce. Their advice should be sought for each specific type of wire rope a crane user intends to install on a mobile crane.

When assembly is complete, raise the boom to a working position with a load suspended to firmly seat the wedge and rope into the socket before the crane is used operationally.

CAUTION

If the socket is not positioned with the flat face toward the boom sections, structural damage will occur.

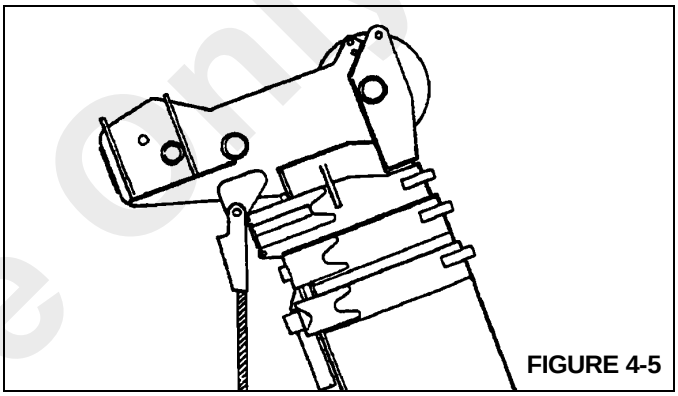

FIGURE 4-5

When anchoring the socket to the boom, ensure the flat face of the socket is in position, as shown, toward the boom sections (Figure 4-5).

INSTALLING WEDGE AND SOCKET

1. Inspect the wedge and socket. Remove any rough edges and burrs.
2. The end of the wire rope should be seized using soft, or annealed wire or strand. If the end of the rope is welded, the welded end should be cut off. This will allow the distortion of the rope strands, caused by the bend around the wedge, to adjust themselves at the end of the line.

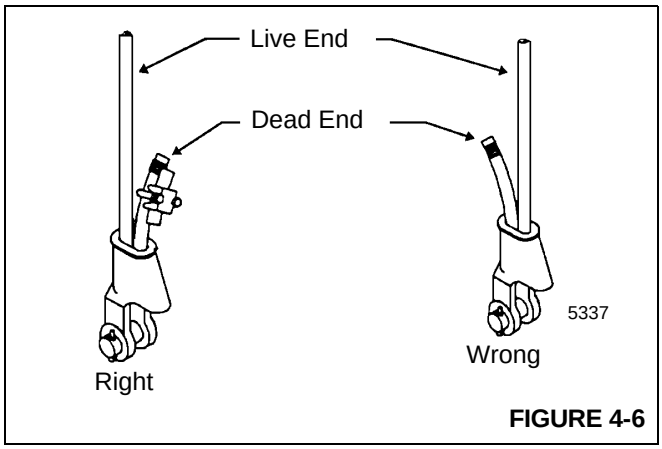

FIGURE 4-6

Reference Only

3. Make sure the live-loaded side (Figure 4-6) of the rope is directly in line with the ears of the socket and the direction of pull to which the rope will be subjected. If the rope is loaded into the socket incorrectly, under a load the rope will bend as it leaves the socket, and the edge of the socket will wear into the rope causing damage to the rope and eventual failure.
4. Insert the end of a wire rope into the socket, form a loop in the rope, and route the rope back through the socket allowing the “dead” end to protrude from the socket. Ensure the dead end of the rope is of sufficient length to apply end treatment to the dead end after the wedge has been seated.
5. Insert the wedge into the loop and pull the live end of the rope until the wedge and rope are snug inside the socket. It is recommended that the wedge be seated inside the socket to properly secure the wire rope by using the crane’s hoist to first apply a light load to the live line.
6. After final pin connections are made, increase the loads gradually until the wedge is properly seated.
7. The wire rope and wedge must be properly secured inside the socket before placing the crane into lifting service. It is the wedge that secures the wire rope inside the socket whereas the dead-end treatment is used to restrain the wedge from becoming dislodged from the socket should the rope suddenly become unloaded from the headache ball or hook block striking the ground, etc.

Sketches A through F (Figure 4-7) illustrate various methods for treating the dead-ends of wire ropes which exit a wedge socket assembly. While use of the loop-back method is acceptable, care must be exercised to avoid the loop becoming entangled with tree branches and other components during crane transport and with the anti-two block system and other components during use of the crane.

Of the methods shown below, Grove prefers that method A or F be used on Grove cranes, i.e., clipping a short piece of wire rope to the dead-end or using a commercially available specialty clip or wedge. Typically, it is recommended that the tail length of the dead-end should be a minimum of 6 rope diameters but not less than 15.2 cm (6 in) for standard 6 to 8 strand ropes and 20 rope diameters but not less than 15.2 cm (6 in) for rotation resistant wire ropes.

When using method A, place a wire rope clip around the dead end by clamping a short extra piece of rope to the rope dead end. DO NOT CLAMP THE LIVE END. The U-bolt should bear against the dead end. The saddle of the clip should bear against the short extra piece. Torque the U-bolts according to the torques listed in Table 4-1.

NOTE: The use of swivels is not allowed in conjunction with non-rotation resistant wire ropes

Other sources for information with which crane users should be familiar and follow is provided by the American Society of Mechanical Engineers, American National Standard, ASME B30.5, latest revised. ASME (formerly ANSI) B30.5 applies to cableways, cranes, derricks, hoists, hooks, jacks, and slings. It states, in section 5-1.7.3, “(c) Swagged, compressed, or wedge socket fittings shall be applied as recommended by the rope, crane or fitting manufacturer.” Wire ropes are addressed in ASME B30.5, section 5-1.7.2, ROPES, It states, in pertinent part, “(a) The ropes shall be of a construction recommended by the rope or crane manufacturer, or person qualified for that service.” Additional information is published by the Wire Rope Technical Board in the *Wire Rope Users Manual*, latest revised.

Table 4-1

WIRE ROPE CLIP TORQUE VALUES			
Clip Sizes		***Torque**	
mm	**Inches**	**Nm**	**Ft-Lbs**
3.18	1/8	6	4.5
4.76	3/16	10	7.5
6.35	1/4	20	15
7.94	5/16	40	30
13.28	3/8	60	45
11.11	7/16	90	65
12.70	1/2	90	65
14.29	9/16	130	95
15.88	5/8	130	95
19.05	3/4	175	130
22.23	7/8	300	225
25.40	1	300	225
28.58	1-1/8	300	225
31.75	1-1/4	490	360
38.68	1-3/8	490	360
38.10	1-1/2	490	360
*The tightening torque values shown are based upon the threads being clean, dry, and free of lubrication.			

Reference Only

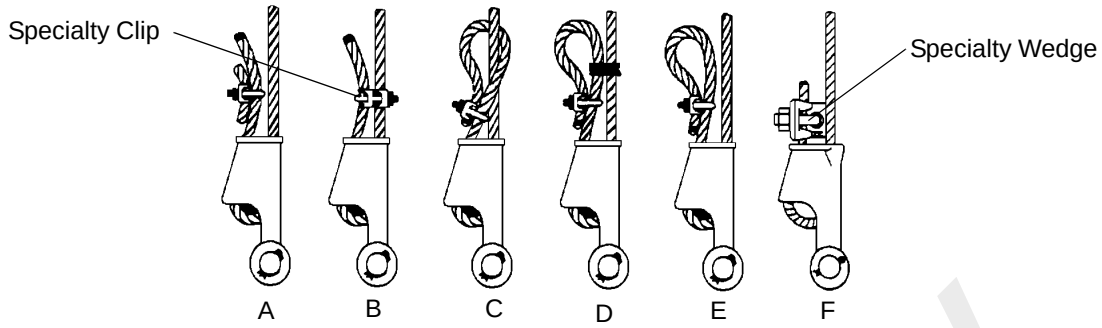

FIGURE 4-7

Reference Only

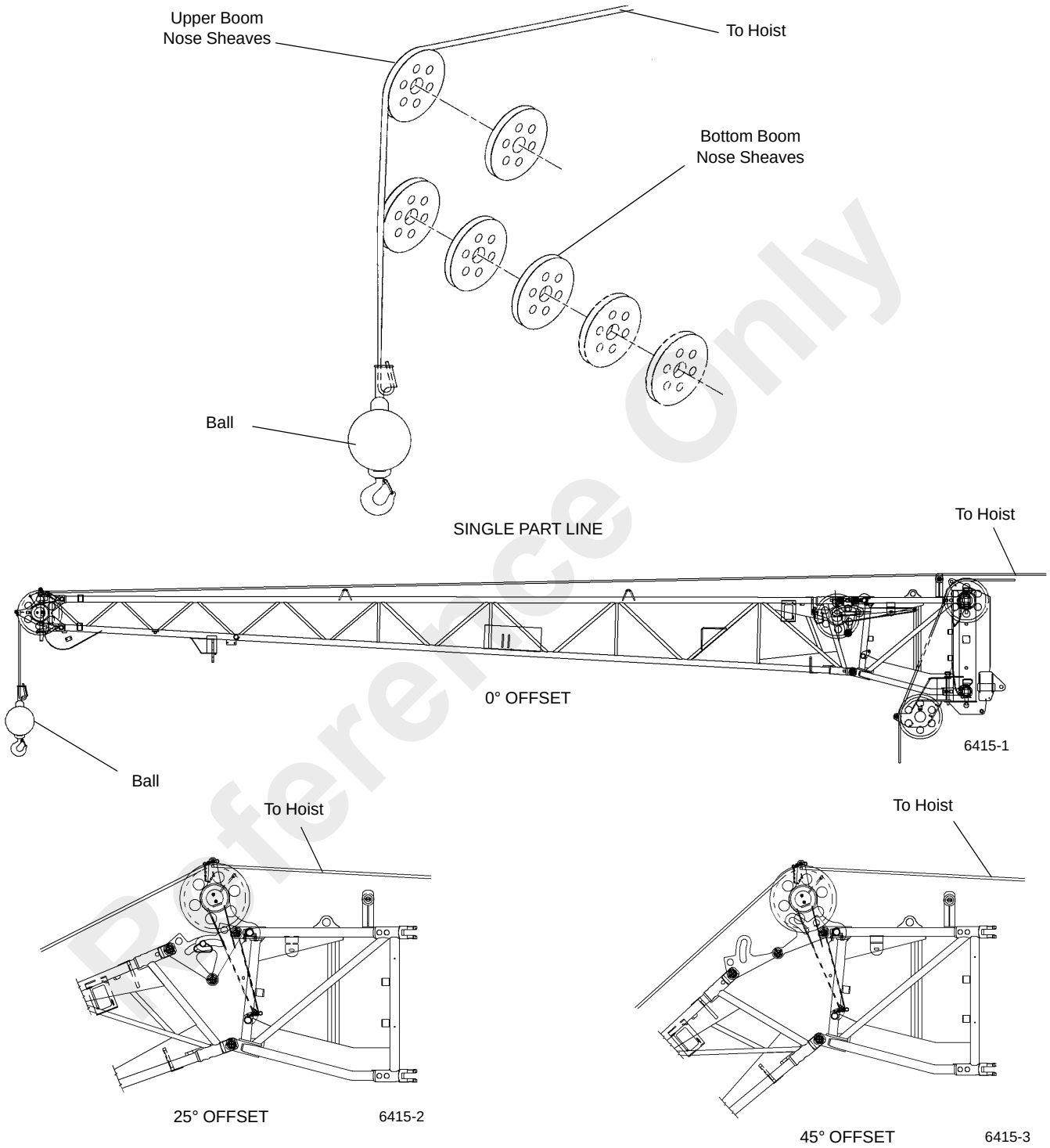

SINGLE PART LINE USING BOOM EXTENSION

FIGURE 4-8

Reference Only

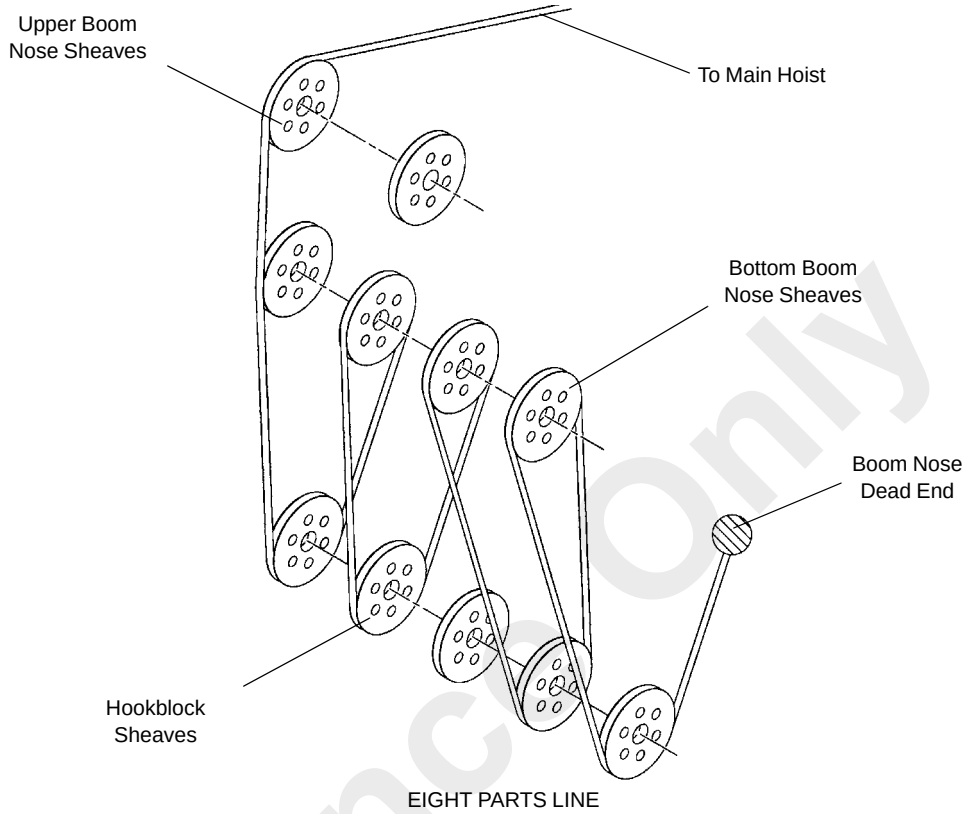

FIGURE 4-8 continued

Reference Only

ERECTING AND STOWING THE BI-FOLD BOOM EXTENSION

Description

A 10.1 m (33 ft) fixed offsetable or a 10.1 to 17.1 m (33 to 56 ft) folding offsetable swingaway boom extension is provided to obtain additional boom reach.

The boom extension mounts directly to the boom nose utilizing a four point attachment. In addition, the swingaway can be stowed on the right side of the boom base section.

Removing the attach pins from the attach points on the left side of the boom nose allows the swingaway to be rotated and stowed on the right side of the boom base section.

The fixed swingaway weighs approximately 774 kg (1706 lb) and the folding swingaway weighs approximately 1102 kg (2430 lb).

DANGER

Before attempting to erect or stow the boom extension; read and strictly adhere to all danger decals installed on the boom/boom nose, boom extension, and stowage brackets.

Lifting over the bi-fold extension base section is strictly prohibited, when the fly extension is either erected or folded along side of extension base section.

DANGER

Extending boom sections 2 through 4 during the erection or stowage of the boom extension could permit disengagement of the anti-roll guides, allowing an uncontrolled movement of the extension, resulting in death, personal injury, or property damage.

Always ensure the crane is in the B mode during erection or stowage of the boom extension. Never erect or stow the boom extension in the recovery mode.

Boom Extension Rigging Mode

This crane is equipped with a boom control system that enters a Boom Extension Rigging Mode when the boom stop block is disengaged and a minimum boom length is detected. While in the Boom Extension Rigging Mode the crane will not allow the following movements:

- Extension of the boom in Auto Mode, with A Mode selected.
- Extension of the boom in Manual Mode, with Boom Section 2-4 selected.

The Boom Extension Rigging Mode requires that the boom be extended in Auto Mode with B Mode selected, or Manual Mode with Section 1 selected until the boom automatically stops and is clear of the guide ramps and stowage pins on the front and rear stowage brackets.

To exit the Boom Extension Rigging Mode the boom must be fully retracted causing the section 1 and section 2 proximity switches to be activated. Upon exiting the Boom Extension Rigging Mode, restrictions of boom operating modes are removed.

Erecting the Boom Extension

1. Fully extend and set the outriggers.
2. Position the boom over the front.
3. Set the boom manual/automatic mode selector switch to the AUTO position.
4. Set the boom A/B mode selector switch to the B mode.
5. If extended, fully retract all the boom sections and lower the boom to minimum elevation to permit ease of installation of pins and access to the boom nose.

NOTE: The auxiliary boom nose (rooster sheave) does not have to be removed. However, if reeved, the hoist cable must be removed from the sheave.

6. Rig either the main hoist or optional auxiliary hoist cable for single part line with nothing but the wedge socket on the end of the cable.
7. Extend the boom enough to disengage the spring loaded boom stop block (Figure 4-9).

FIGURE 4-9

Reference Only

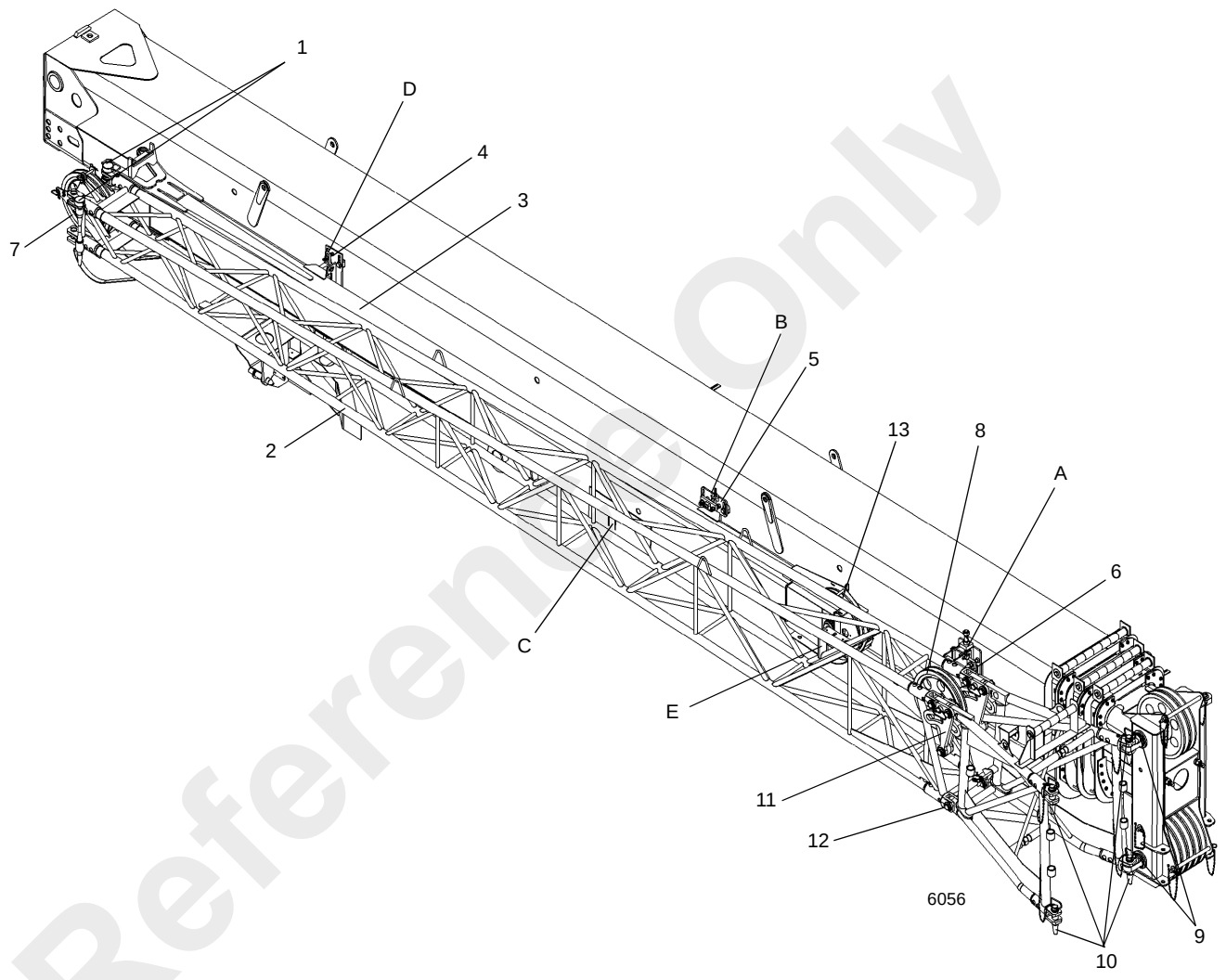

FIGURE 4-10

Item	Description
1	Base To Fly Attachment Pins
2	Boom Extension Base Section
3	Boom Extension Fly Section
4	Fly Rear Stowage Bracket
5	Stinger Section Front Stowage Bracket
6	Front Stowage Bracket
7	Swingaway Base Sheave

Item	Description
8	Mast Assembly
9	Boom Nose To Boom Extension Attachment Anchor Fittings
10	Boom Nose To Boom Extension Attachment Pins
11	Offset Links
12	Offset Pivot Point
13	Fly Sheave

Reference Only

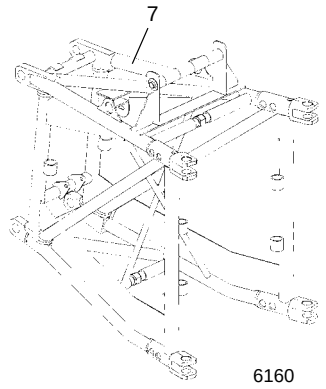

Item	Description
1	Boom Extension Base Section
2	Adjusting Bolt
3	Upper Hanger
4	Main Hanger
5	Lower Support
6	Lock Hitch Pin
7	Adapter

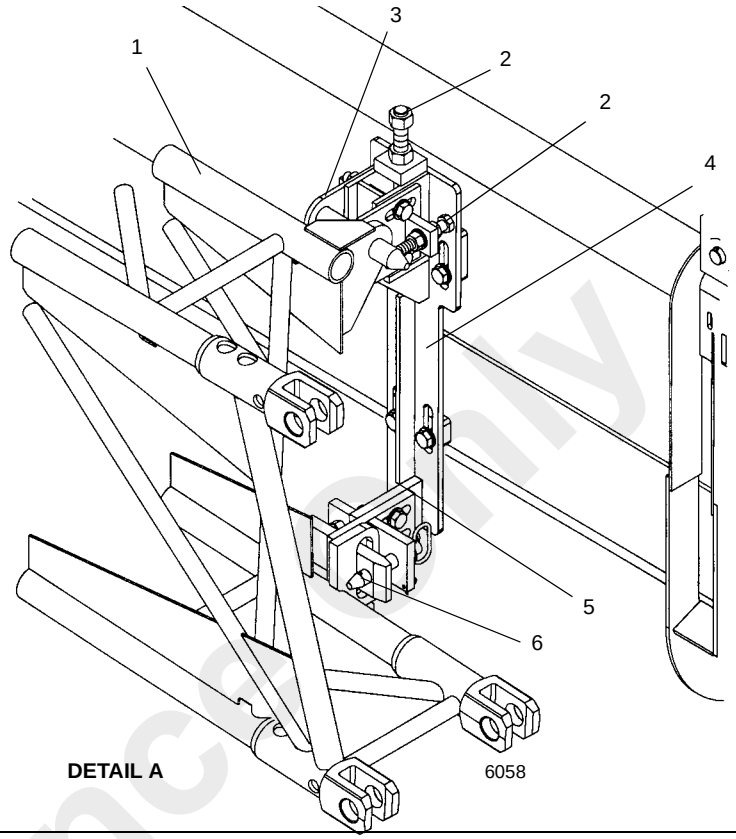

Item	Description
1	Boom Extension Fly Section
2	Adjusting Bolt
3	Adjusting Bolts
4	Front Mount
5	Hanger

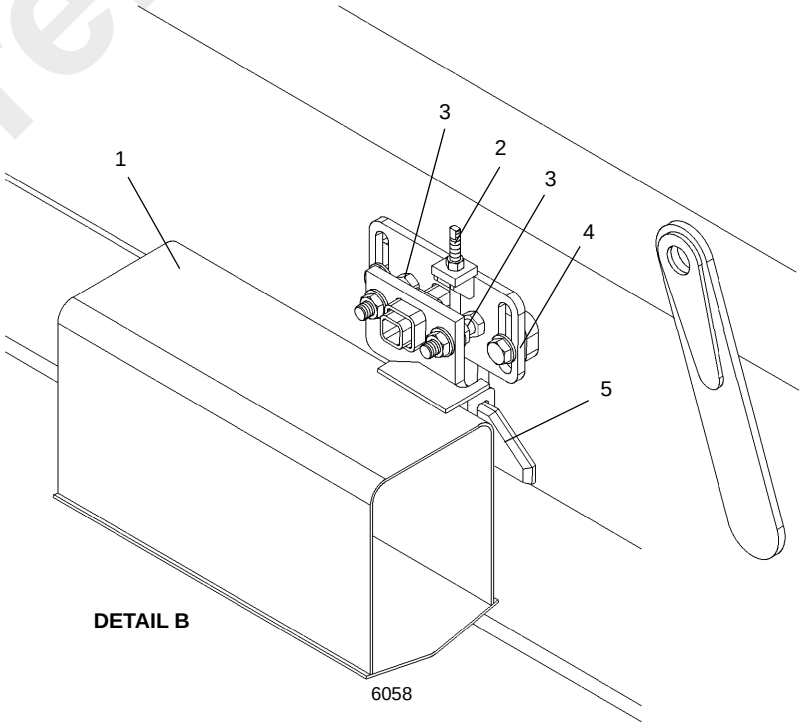

FIGURE 4-10 continued

Reference Only

Item	Description
1	Boom Extension Base Section
2	Boom Extension Fly Section
3	Shock Wear Pad and Shim
4	Ramp Wear Pad and Shim

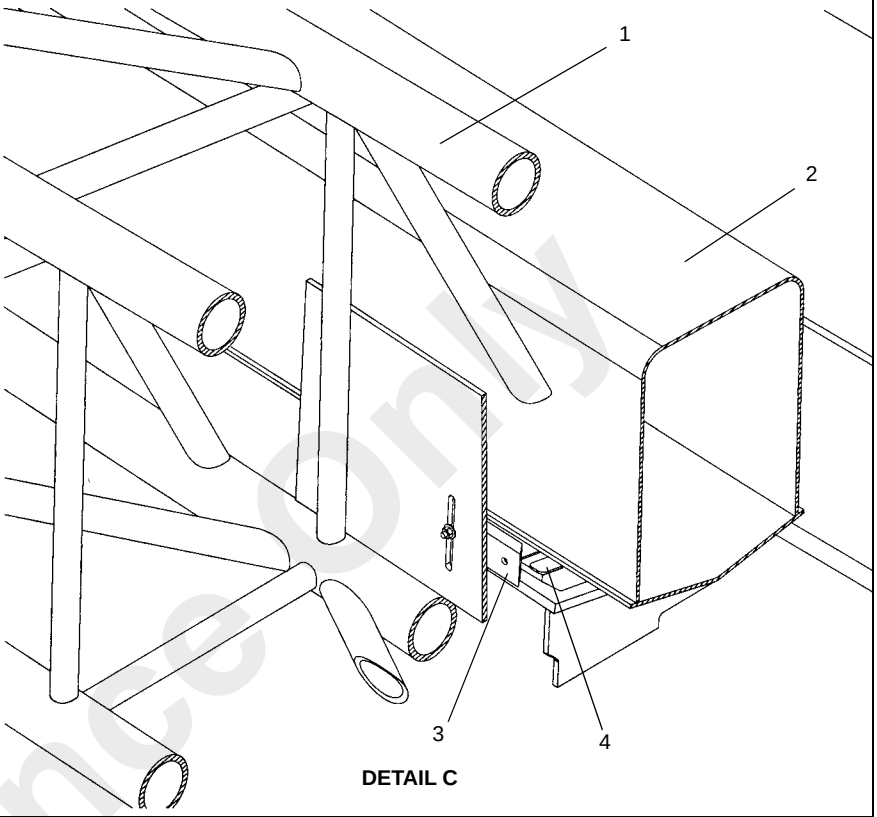

DETAIL C

Item	Description
1	Boom Extension Base Section
2	Boom Extension Fly Section
3	Fly Attachment Pin and Hitch Pin
4	Adjusting Bolts
5	Pin Stowage Lug
6	Upper Support
7	Lower Mount Ramp
8	Wear Pad

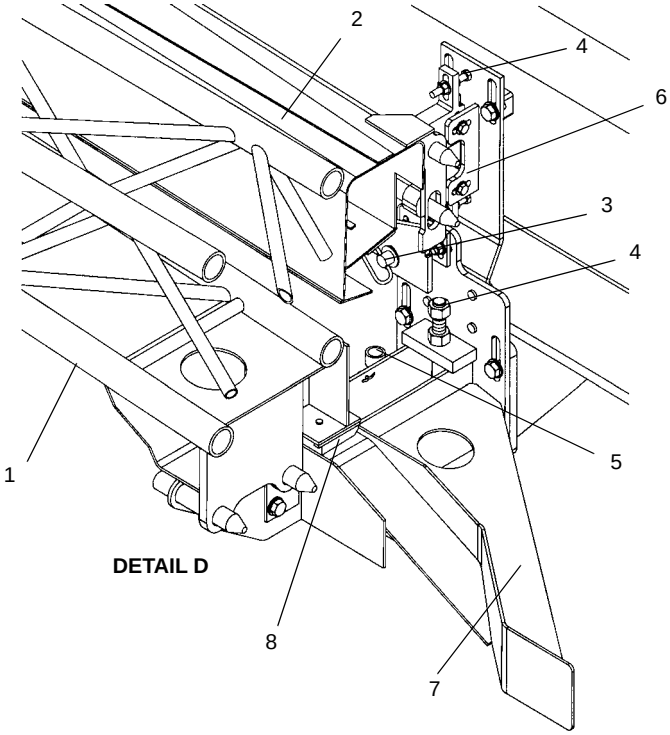

DETAIL D

FIGURE 4-10 continued

Reference Only

Item	Description
1	Boom Extension Base Section
2	Boom Extension Fly Section
3	Fly Sheave
4	Cable Retainer Pins
5	Latch Hook
6	Spring
7	Latch Bar

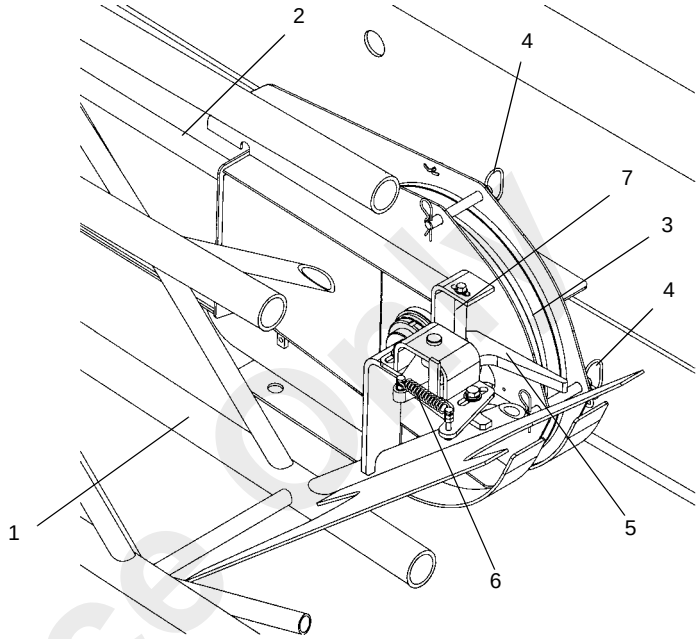

DETAIL E

Item	Description
1	Boom Nose Upper Sheaves
2	Mast Assembly
3	Offset Links
4	Offset Pivot Points
5	Offset Link Pins Stowage Lugs
6	Mast Assembly Pin
7	Boom Nose Lower Sheaves
8	Boom Extension Attachment Pins
9	Boom Extension Attachment Pins Stowage Lugs
10	Offset Link Pins
11	Zero Degree Offset Holes

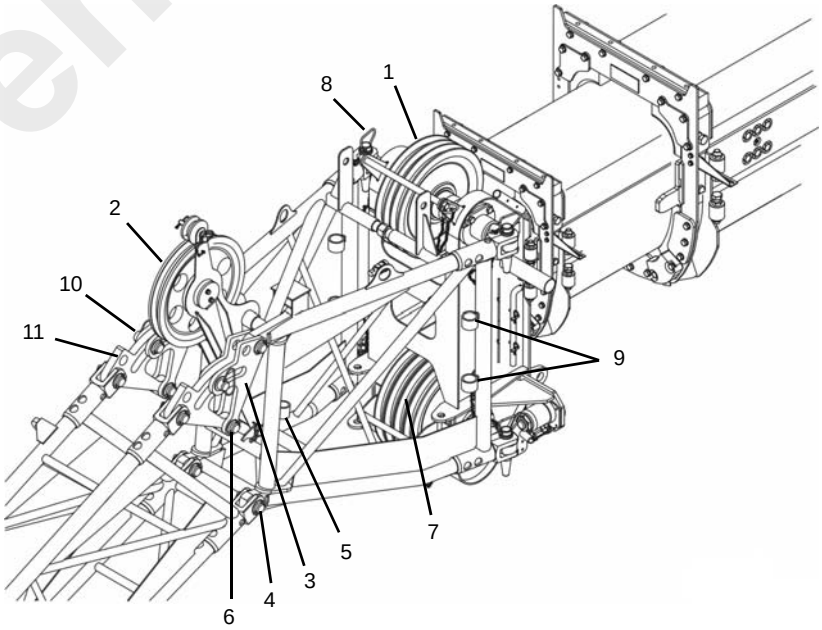

6658-1

NOTE: Offset Shown At 25 Degrees. To Obtain 45 Degree Offset, Remove Pins (Item 10) and Stow in Lug.

FIGURE 4-10 continued

Reference Only

8. Pull down on the handle to disengage the spring loaded boom stop block. Place the end of the handle in the retainer plate. Fully retract the boom.

NOTE: When the boom retracts, the handle will be released allowing the stop block to engage when the boom is extended.

NOTE: The length indication on the rated capacity limiter (RCL) will display 0 (zero) when the spring-loaded stop block is in the working position (engaged) and the boom is fully retracted. During the process of stowing and erecting the boom extension, the RCL may display a negative dimension when the stop block is retracted (disengaged) and the boom is fully retracted.

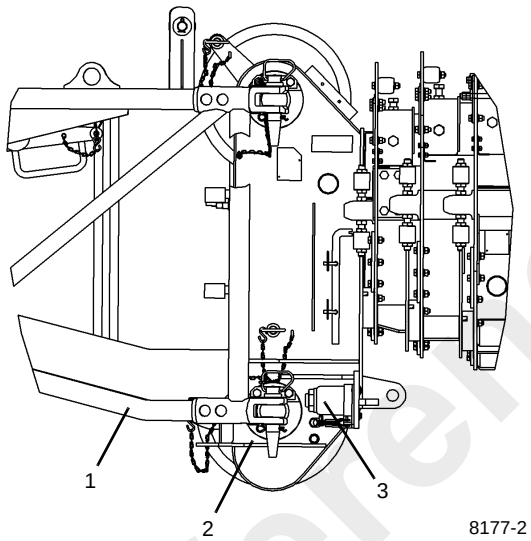

Item	Description
1	Boom Extension
2	Boom Nose
3	Alignment Jack

FIGURE 4-10 continued

9. Remove the retainer clips from the attachment pins stowed in the base of the boom extension and insert the attachment pins through the attachment and anchor fittings on the right side of the boom nose. Install the retainer clips in the attachment pins.

CAUTION

If the boom extension fly section (stinger) is not to be erected, it should remain on the stowage brackets on the side of the boom.

10. Attach a length of rope to the extension base section tip to aid in the extension of the swingaway into place ahead of the boom nose.

NOTE: If erecting the boom extension fly section with the boom extension base section, skip to step 15. If not erecting the boom extension fly section, perform steps 11 to 14.

11. Remove retainer clip from base to fly attachment pin and remove attachment pin from base section to fly section attachment fittings.

12. Stow the pin in the opposite attach fitting or the stowage lug.

13. Ensure the pin attaching the fly section to the boom base section rear stowage bracket (Figure 4-10), (Detail D) is in place.

14. At fly section sheave end (Figure 4-10), (Detail E) push in on the spring loaded latch hook to release latch, allowing the base to separate from the fly. Skip to step 16.

15. Remove the pin attaching the fly extension section to the boom base section rear storage bracket (Figure 4-10, Detail D). Ensure that the latch hook at the fly section sheave end (Figure 4-10, Detail E) is latched.

16. Remove the lock hitch pin securing the extension base to the front stowage bracket (Figure 4-10, Detail A). Stow lock hitch pin in lug provided.

17. Raise the boom to slightly above horizontal, then extend the boom until the extension is clear of the guide ramps and stowage pins on the front and rear stowage brackets.

DANGER

When erecting the boom extension, ensure that all personnel and equipment are kept clear of the swing path.

18. Slightly raise and/or lower the boom to help control the extension. Using the rope attached to the tip of the extension, swing the extension into place ahead of the boom nose, engaging the anchor fittings with the attachment fittings on the left side of the boom nose.

DANGER

Do not modify the attach points to permit the installation of the attach pins.

19. Install the attachment pin into the upper left anchor and attachment fitting of the boom nose. Install retainer clip in attachment pin.

Reference Only

20. Extend the boom extension alignment jack until the lower left side boom nose and boom extension adapter lugs are aligned; install the attachment pin into the lower left anchor and attachment fitting of the boom nose. Install retainer clip in attachment pin.

21. Retract the alignment jack to its original position, then return the jack handle to its stowed position.

22. Extend the boom until it automatically stops.

NOTE: Reaching this stopping point is required for the Boom Extension Rigging Mode process.

23. Lower the boom and remove the rope from the tip of the extension base section.

DANGER

Do not attempt to erect the fly section unless it was attached to the boom extension base section during the initial erection procedure.

24. Retract the boom until it stops on the stop block.

NOTE: When the boom reaches this stopping point and the section 1 and section 2 proximity switches are activated, the Boom Extension Rigging Mode is complete and the restrictions on the boom operating modes are removed.

25. Connect RCL cables:

a. Remove RCL cable end connector (1) (Figure 4-11) from extension and route through boom extension.

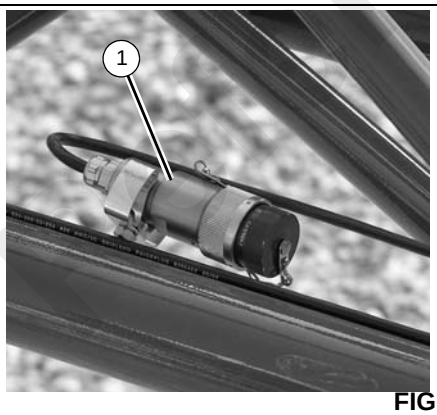

6642-19 **FIGURE 4-11**

b. Remove dummy plug (1) Figure 4-12 from junction box on boom nose.

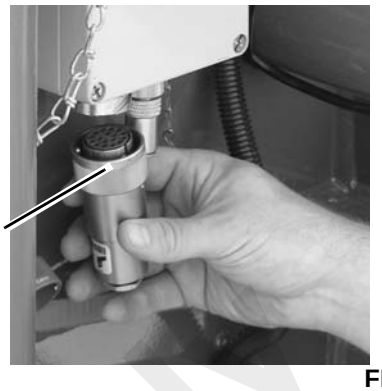

6642-20 **FIGURE 4-12**

c. Install cable end connector (1) (Figure 4-13) from boom extension where dummy plug was removed.

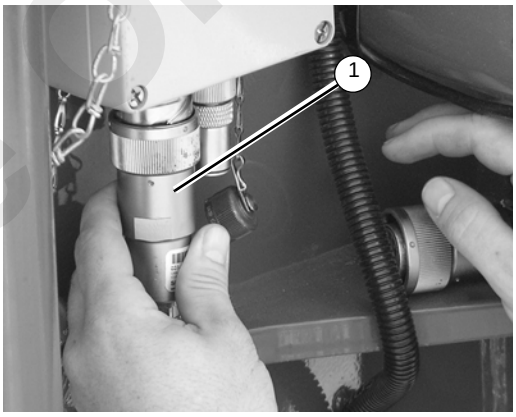

6642-21 **FIGURE 4-13**

26. Erect the boom extension fly section as follows:

a. Attach a length of rope to the tip of the extension fly section to aid in swinging the fly into place ahead of the base section. Ensure that the right base to fly extension attachment pin is in place.

b. Position the boom to horizontal.

c. At the fly section sheave end (see detail E), push in on the spring loaded latch hook to release the latch allowing fly to separate from the base.

DANGER

When erecting the extension fly section, ensure that all personnel and equipment are kept clear of the swing path.

d. Slightly raise and/or lower the boom to help control the fly section. Using the rope attached to the tip of the fly section, swing the fly into place ahead of the extension base, engaging the anchor fittings with the attachment fittings on the left side of the base section.

e. Install the attachment pin into the anchor and attachment fittings on the left side of the base section.

f. Lower the boom and remove the rope from the tip of the extension.

NOTE: Refer to *Setting the Folding Swingaway Offset, page 4-17* to obtain a 25 or 45 degree offset with the swingaway.

27. Remove the cable retainer pins and clip pins from the tip of the extension base section or extension fly section.

NOTE: For zero (0) degree offset, leave the mast assembly in the stowed position.

28. Remove the mast assembly clip pin and pin from the stowed position on the extension and raise the mast assembly to an upright position. Install the pin and clip pin. Remove the cable retainer pin and clip pin from the mast.

NOTE: The hoist cable is not routed over the base extension sheave when using the fly extension.

29. Route the hoist cable over the mast sheave, the rollers on the adapter, the roller on the fly extension, and the sheave on the extension tip. Install the cable retainer pins and clip pins.

NOTE: Do not reeve hoist cable through sheaves on the main boom nose.

30. Rig the hoist cable.

Stowing the Boom Extension

NOTE: The boom extension must be set at the zero (0) degree offset. Refer to *Setting the Folding Swingaway Offset, page 4-17*.

NOTE: If so equipped, the folding fly section must be stowed on the side of the base section.

DANGER

During disengagement of the stop block, extend the boom only enough to free the block. Extending the boom too far will cause the base extension to slide off the guide ramps and allow the extension to swing.

1. Fully retract the boom and swing it over the front.

2. Set the boom manual/automatic mode selector switch to the AUTO position.

3. Set the boom A/B mode selector switch to the B mode.

4. Lower the boom, then extend the boom only enough to disengage the spring loaded boom stop block.

5. Pull down on the handle to disengage the spring loaded boom extension stop block (Figure 4-14). Place the end of the handle in the retainer plate.

FIGURE 4-14

6. Fully retract the boom.

NOTE: When the boom retracts, the handle will be released allowing the stop block to engage when the boom is extended.

NOTE: The length indication on the rated capacity limiter (RCL) will display 0 (zero) when the spring-loaded stop block is in the working position (engaged) and the boom is fully retracted. The RCL may display a negative dimension when the stop block is retracted (disengaged) and the boom is fully retracted during the process of stowing and erecting the boom extension.

7. Lower the boom to minimum elevation.

8. Remove the cable retainer pins and clip pins from the swingaway tip and mast assembly. Remove the hoist cable from the extension sheave and or mast. Install the cable retainer pins and clip pins.

9. Remove the mast assembly pin and clip pin securing the mast in the upright position. Lay the mast over to the stowed position and install the mast assembly pin and clip pin.

10. Disconnect RCL cable.

a. Remove connector (1, Figure 4-15) from junction box on boom nose.

Reference Only

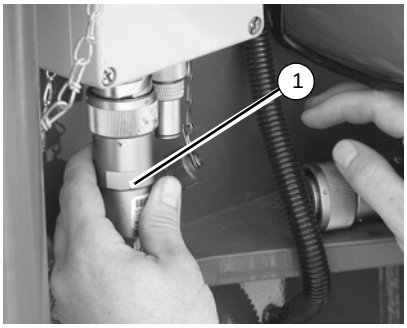

6642-21 **FIGURE 4-15**

b. Install dummy plug (1, Figure 4-16) on junction box.

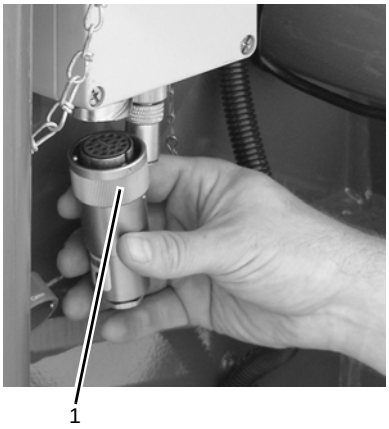

6642-20 **FIGURE 4-16**

c. Route cable through boom extension and stow connector (1, Figure 4-17).

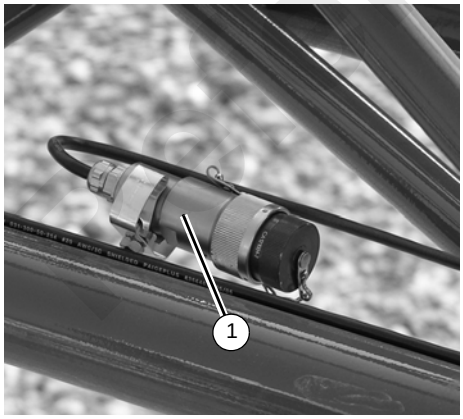

6642-19 **FIGURE 4-17**

11. If erected, stow the extension fly section as follows:

a. Attach a length of rope to the fly extension tip.

b. Raise the boom to horizontal.

c. Remove the retainer clip and attachment pin from the anchor and attach fittings on the left side of the base section and stow in the base section.

DANGER

When stowing the fly extension, ensure that all personnel and equipment are kept clear of the swing path.

d. Slightly raise and/or lower the boom to help control the fly extension. Using the rope attached to the tip of the fly section, swing the fly to the side of the base section.

e. Elevate the boom and push in on the fly section to engage the spring loaded latch hook (Detail E) on the base section. Ensure the latch hook is properly engaged.

f. Lower the boom and remove the rope from the fly section.

12. Lower the boom to minimum elevation.

13. Attach a length of rope to the base extension tip.

14. Raise the boom to horizontal.

15. Extend the boom approximately 12 in so that the extension base and fly stowage lugs will line up in front of the guide ramps and pins on the stowage brackets when the swingaway is positioned to the side of the boom.

16. Extend the boom extension alignment jack until the bottom left side attachment pin is free. Remove the bottom left side boom retainer clip pin and attach pin.

17. Retract the alignment jack to its original position, then return the jack handle to its stowed position.

18. Pull down on the handle to disengage the spring loaded boom stop block. Place the end of the handle in the retainer plate.

19. Remove the retainer clip and attach pin from the anchor and attachment fitting on the top left side of the boom nose; stow all pins in the base of the base extension.

DANGER

When stowing the extension, ensure that all personnel and equipment are kept clear of the swing path.

20. Raise and/or lower the boom to help control the swingaway and using the rope attached to the tip of the base extension, swing the base extension to the side of the boom.

21. Elevate the boom and push in on the extension to align the stowage lugs on the extension with the guide ramps and pins on the stowage brackets and fully retract the boom.

Reference Only

22. Ensure that all of the stowage lugs on the base and fly are fully engaged with the pins on the stowage brackets.

23. Fully lower the boom.

24. Install the pin securing the extension base to the front stowage bracket (Figure 4-8), (Detail A). Ensure the lock hitch pin is pushed all the way in.

25. Install the pin attaching the fly section to the boom base section stowage bracket (Figure 4-10), (Detail D).

NOTE: If the fly extension section remained on the boom stowage brackets, perform steps 26 through 29.

26. Remove retainer clip and attachment pin from the bushing on base section.

27. Insert the attachment pin into the base section to fly section attachment fittings and install the retainer pin.

28. Ensure the spring loaded latch hook is engaged on fly section sheave end (Figure 4-10), (Detail E).

29. Ensure the pin attaching the fly section to the boom base section stowage bracket (Figure 4-10), (Detail D) is in place.

30. Remove the retainer clips and attachment pins from the anchor and attach fittings on the right side of the boom nose and stow them in the base of the swingaway.

DANGER

Failure to maintain the proper clearance between the base extension anchor fittings and the boom nose attach fittings could cause these fittings to contact each other during operation of the boom.

31. Extend the boom in AUTO mode with B mode selected, or Manual Mode with Section 1 selected, until the boom stops.

NOTE: Reaching this stopping point is required for the Boom Extension Rigging Mode process.

32. Retract the boom until it stops on the stop block.

NOTE: When the boom reaches this stopping point and the section 1 and section 2 proximity switches are activated, the Boom Extension Rigging Mode is complete and the restrictions on the boom operating modes are removed.

33. Rig the boom nose and hoist cable as desired and operate the crane using normal operating procedures.

Setting the Folding Swingaway Offset

DANGER

Crushing Hazard!

Ensure any blocking material used is adequate to support the weight of the extension assembly without tipping or falling.

1. Extend and set the outriggers and swing the boom to over the front. Position the boom to above horizontal.

2. Block under the tip of the extension assembly section.

3. To set the offset from a lesser degree to higher degree perform the following procedures:

CAUTION

Possible Equipment Damage!

Do not overload the extension anchor fittings or the extension base section when lowering the boom.

a. Slowly lower the boom until the pressure is relieved on the offset link pins.

NOTE: For 25 or 45 degree offset, make sure the mast is in the raised position.

b. Remove the offset link clip pins and attach pins securing the offset links in the lesser degree offset position. If going to maximum offset stow them in the stowage lugs. If going to the intermediate (25 degree) offset install them in the offset links for that degree of offset.

c. Slowly elevate and telescope the boom at the same time so that the extension does not move off of the blocking until the offset links take the full weight of the extension.

d. Reeve the hoist cable as described under normal erecting procedures.

4. To set the offset from higher degree to lesser degree, perform the following procedures:

CAUTION

Do not overload the extension anchor fittings or the extension base section when lowering the boom.

a. Slowly lower the boom until the pressure is relieved from the offset links.

b. Remove the offset link clip pins and attachment pins and lower the boom until the holes for the lesser

Reference Only

degree offset position align in the offset links. Install the offset pins and clip pins.

c. Slowly elevate and telescope the boom at the same time so that the extension does not move off of the blocking until the offset links take the full weight of the extension.

d. Reeve the hoist cable as described under normal erecting procedures.

ERECTING AND STOWING THE BI-FOLD BOOM EXTENSION WITH THE 6.1 M (20 FT) INSERT

DANGER

Crushing Hazard!

Before attempting to erect or stow the bi-fold extension with insert, read and strictly adhere to all danger decals installed on the boom/boom nose, boom extension, insert, and stowage brackets.

Erecting

1. Fully extend and set the outriggers.

2. Position the boom over the front.

3. If extended, fully retract all the boom sections and lower the boom to minimum elevation to permit ease of installation of pins and access to the boom nose.

NOTE: The auxiliary boom nose (rooster sheave) does not have to be removed. However, if reeved, the hoist cable must be removed from the sheave.

4. Attach the swingaway to the boom nose using steps 3 thru 24 of Erecting the Bi-Fold Boom Extension Assembly.

5. Extend the boom as necessary to permit sufficient clearance for installation of the 6.1 m (20 ft) Extension Insert; then lower it until the tip of the bi-fold extension assembly is laying on the ground. Block up under the bi-fold extension, approximately 2.4 m to 3.0 m (8 ft to 10 ft) ahead of the boom nose.

6. Remove the four retainer clips and attachment pins that secure the bi-fold extension to the boom nose.

7. Retract the boom leaving the bi-fold extension on the blocking.

8. Using the main or auxiliary hoist cable, lift the Insert by the lifting lugs and position it at the base end of the bi-fold extension.

9. Mate the Insert to the bi-fold extension and install the four attaching pins and retainer clips removed in step 6.

10. With the hoist cable still attached to the Insert, lift the assembled unit and move the blocking, erected in step 5, to approximately 2.4 m to 3.0 m (8 ft to 10 ft) ahead of the boom nose attach end of the Insert.

NOTE: Repeat steps 6 through steps 16 in a similar manner to install the second Insert if applicable.

11. Lower the bi-fold and insert assembly onto the blocks and detach the hoist cable.

12. Retract the boom and lower to minimum elevation.

13. Rig the hoist cable for single part line with nothing but the wedge socket on the end of the cable.

14. Extend the boom and mate the attachment lugs on the Insert with the anchor fittings on the boom nose. It may be necessary to raise or lower the boom slightly to mate the attach lugs.

NOTE: If the Insert attach lug holes are not in lateral alignment with the holes in the boom nose anchor fittings to install the pins, adjust the upper and lower cross strut adjustment screws on the Insert to align the holes.

15. Remove the retainer clips from the four attachment pins stowed on the Insert and install them in the attachment and anchor fittings on both sides of the boom nose. Install the retainer clips.

CAUTION

Possible Equipment Damage!

Do not attempt to swing the boom extension around to the right side of the insert. This could result in damage to the insert.

16. Slowly elevate the boom and remove the blocking from under the Insert and bi-fold extension.

17. Refer to steps 26 thru 30 of Erecting The Boom Extension to erect the fly section, to set the offset, and rig the hoist cable.

Reference Only

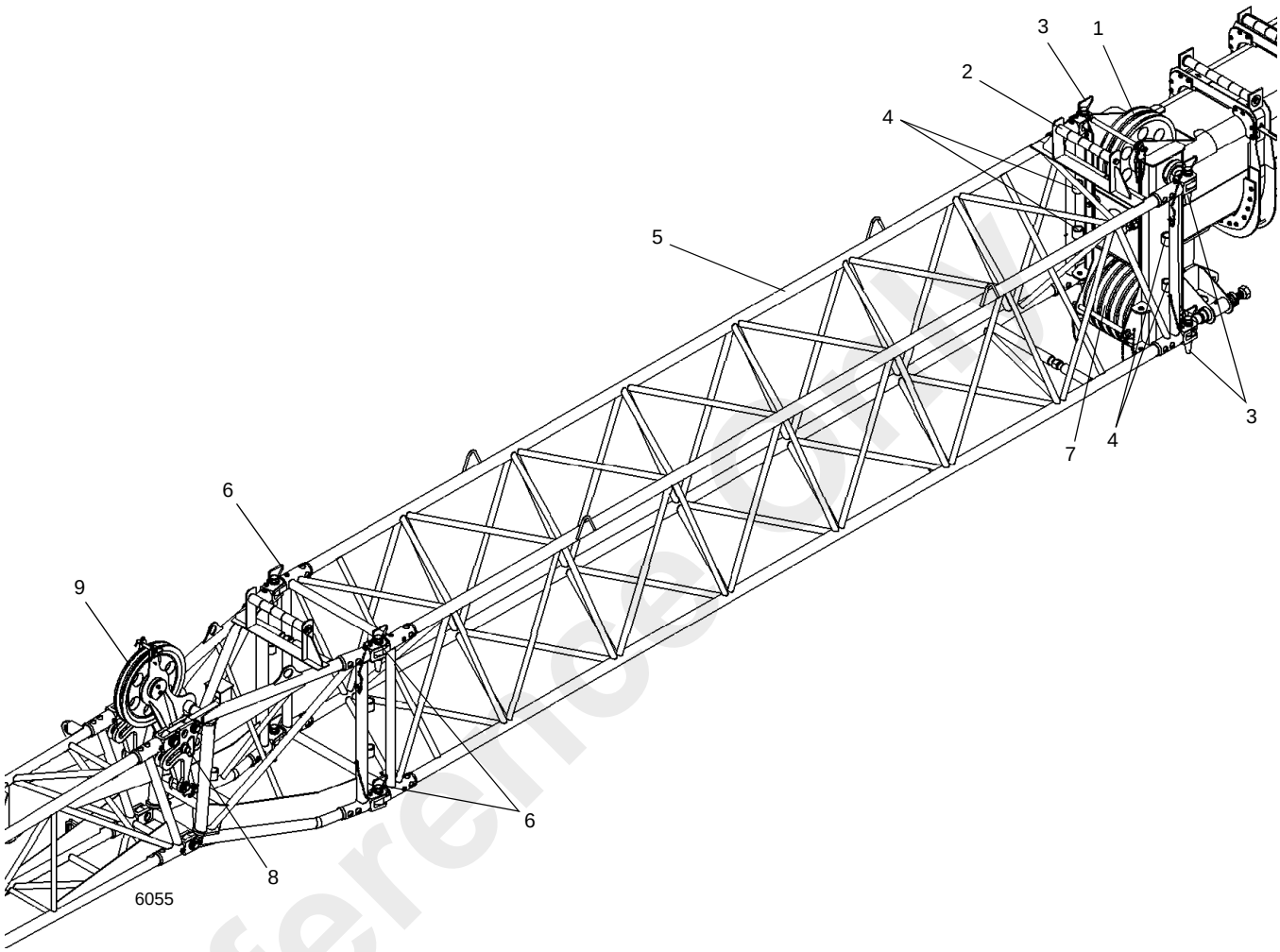

FIGURE 4-18

Item	Description
1	Boom Nose Upper Sheaves
2	Cable Roller
3	Insert Attachment Pins
4	Insert Attachment Pins Stowage Lugs
5	20 ft (6.1 m) Insert
6	Bi-Fold Extension Attachment Pins

Item	Description
7	Boom Nose Lower Sheaves
8	Offset Link Pins
9	Bi-Fold Extension Mast Assembly

Reference Only

Stowing

NOTE: If equipped, the folding fly section must be stowed on the side of the base section.

1. If the fly section is erected, refer to steps 1 thru 5 of Stowing The Bi-Fold Boom Extension.
2. Extend the boom approximately 1.22 m to 1.52 m (4 ft to 5 ft). Lower the boom until the sheave is on the ground.
3. Block up under the insert approximately 2.4 m to 3.0 m (8 ft to 10 ft) forward of the boom nose.
4. Remove the retainer clips from the four pins in the attachment and anchor fittings and remove the attachment pins. Stow the pins in the holders on the insert.
5. Retract the boom disengaging the anchor fittings on the boom nose from the attaching lugs on the insert.
6. Attach a hook to the hoist cable.
7. Attach the hoist cable hook to the lifting lugs on the insert. Lift the assembly and reposition the blocking approximately 2.4 m to 3 m (8 ft to 10 ft) forward of the insert to swingaway attachment points.
8. While supporting the insert with the hoist cable, remove the retainer clips from the four pins attaching the insert to the swingaway. Remove the four pins.
9. Remove the insert and position it to one side of the crane.
10. Position the boom and extend it to engage the boom nose with the swingaway. Install the four attachment pins and retainer clips removed in step 8.
11. Stow the swingaway on the side of the main boom using steps 6 thru 26 of *Stowing the Boom Extension, page 4-15*.

Reference Only

FIXED COUNTERWEIGHT

Description

The counterweight (Figure 4-19) is pinned to the rear of the superstructure and weighs about 6540 kg (14,400 lb). For cranes without an auxiliary hoist, an additional 672 kg (1478 lb) counterweight is bolted to the hoist mounting area instead of the auxiliary hoist.

Maintenance

DANGER

Crushing Hazard!

Death or serious injury could result from being crushed by a falling counterweight.

Ensure the counterweight pin assemblies are installed properly and are secure in their catches.

When lifting/handling the counterweight, keep the chains/straps vertical to minimize side pull on the lifting lugs.

Removal

1. Fully extend and set the outriggers.
2. Rotate the superstructure so the counterweight is over the front of the carrier to gain additional clearance.

NOTE: The counterweight weighs approximately 6540 kg (14,400 lb).

3. Lower and fully retract the boom.

NOTE: Use of a forklift to install or remove the counterweight is not recommended. Damage or misalignment of the counterweight can result if a forklift is used for installation or removal.

4. Attach an adequate lifting device to the counterweight.
5. Adjust the four counterweight leveling bolts to provide maximum clearance of the counterweight from the superstructure.
6. Take up any slack on the lifting device and raise the counterweight just enough to remove any pressure on the left and right counterweight pin assemblies.
7. Remove the pins from the superstructure frame lugs and the counterweight. To remove each pin, push pin in and turn it so its roll pin disengages from the related catch on the counterweight.
8. Lower the counterweight enough to clear the superstructure. Remove the counterweight from the crane and replace the retainer pins in mounting lugs.
9. Rotate the superstructure to the normal travel position.

Installation

1. Fully extend and set the outriggers.
2. Rotate the superstructure so the counterweight will be over the front of the carrier to gain additional clearance.

CAUTION

When lifting/handling the counterweight, keep the chains/straps vertical to minimize side pull on the lifting lugs.

NOTE: The counterweight weighs approximately 6540 kg (14,400 lb).

Use of a forklift to install or remove the counterweight is not recommended; damage or misalignment of the counterweight can result.

3. Attach an adequate lifting device to the counterweight and lift the counterweight into place on the superstructure, aligning the mounting holes on the counterweight to the holes in the superstructure.
4. Secure the counterweight to the superstructure with the two pins. Secure the pin by pushing it in and turning it so the roll pin engages the related catch on the counterweight. Release the pin so its spring can hold the pin in place.
5. Remove the lifting device from the counterweight.

Reference Only

6. Using the four counterweight leveling bolts, level the counterweight and eliminate any relative movement between the counterweight and turntable. Maximum height of counterweight shall not exceed 6 mm (0.24 in) out of level with the turntable bearing when measured from either counterweight outer edge.

Counterweight Plate

The counterweight has a removable counterweight plate attached to its rear wall with capscrews, flat washers and nuts. This plate weighs 395 kg (870 lb). Use appropriate caution and safety equipment in removing and installing this plate.

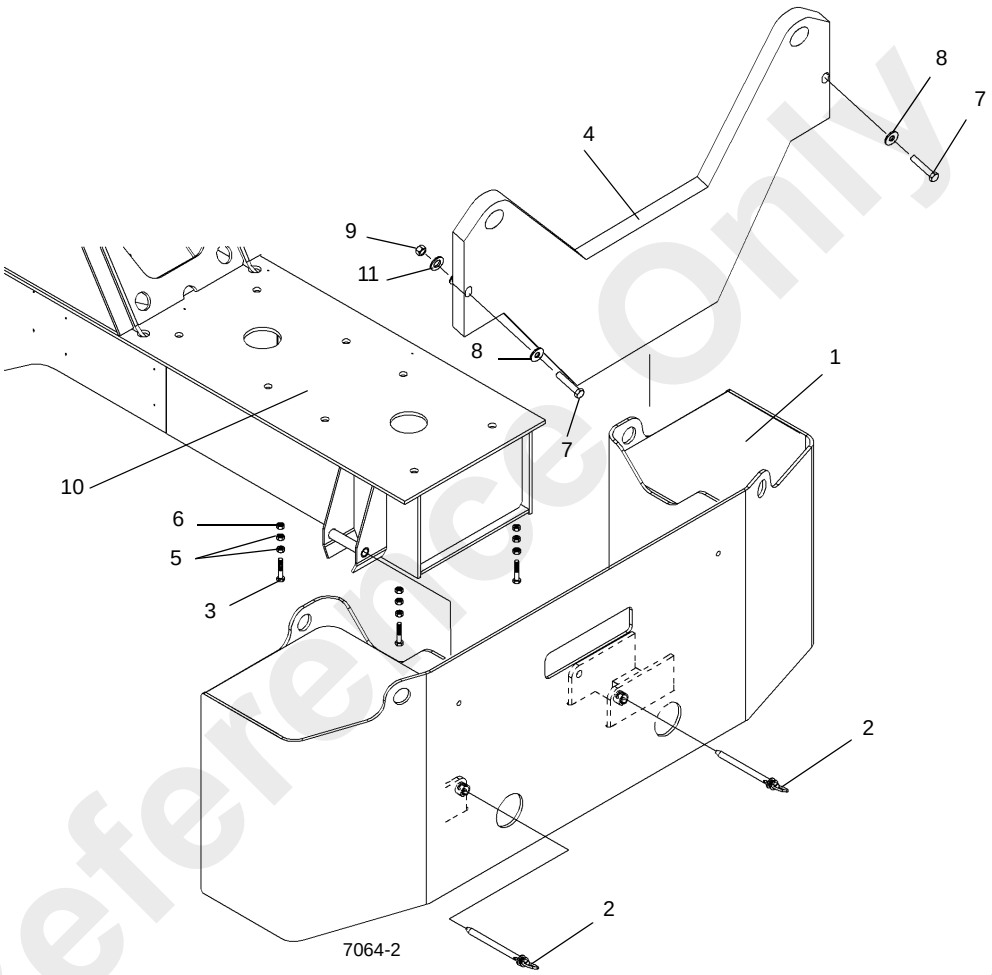

FIGURE 4-19

Item	Description
1	Fixed Counterweight
2	Pin Assembly
3	Capscrew
4	Counterweight Plate
5	Flatwasher

Item	Description
6	Locknut
7	Capscrew
8	Flatwasher
9	Locknut
10	Turntable

Reference Only

REMOVABLE COUNTERWEIGHT (OPTIONAL)

DANGER

Death or serious injury could result from being crushed by a falling counterweight.

Ensure that all mounting pins are properly installed and locked, during, and after operating the counterweight removal system.

Removal

1. Position the crane on a firm level surface. Fully extend and set the outriggers.
2. Rotate the superstructure to align the counterweight with the support weld on the front outrigger box. Engaging the pin type turntable lock will aid alignment.

NOTE: It may be necessary to jog the counterweight removal control valve switches to remove the weight of the counterweight from the upper attach pins.

3. Using the counterweight removal control valve switches (Figure 4-20), raise the counterweight cylinders to relieve weight on the upper attach pins.

Valve Control Switches

7889-2 **FIGURE 4-20**

4. Push in, turn, and remove the upper attach pins from the superstructure frame lugs and the counterweight.
5. Stow the upper attach pins in the bushings on the side of the superstructure.
6. Using the counterweight removal control valve switches, slowly lower the counterweight onto the carrier stowage area.
7. Remove the attach pins from the counterweight lugs and cylinder ends. Raise the cylinders and stow the attach pins in cylinder and insert retainer clip pins.

DANGER

Travel is not permitted with the removable counterweight on the carrier deck.

NOTE: The counterweight weighs approximately 6895 kg (15,200 lb).

8. Remove counterweight from the support weld on the front outrigger box before moving crane.
9. Using the crane's boom and hoist or other crane, lift the counterweight from the carrier deck to the auxiliary transport vehicle.

Installation

1. Position the crane on a firm level surface. Fully extend and set the outriggers.
2. Select the proper "Without Counterweight" operating code on the RCL.

NOTE: The counterweight weighs approximately 6895 kg (15,200 lb).

3. Using the crane's boom and hoist or other crane, lift the counterweight from the auxiliary transport vehicle and position the counterweight.
4. Rotate and align the rear of the superstructure above the removable counterweight setting on the support weld on the front outrigger box. Engaging the pin type turntable lock will aid alignment.
5. Using the counterweight removal control valve switches (Figure 4-20) located on either side of the turntable, lower the counterweight cylinders. Pin the cylinders to the counterweight using the attach pins in the cylinders. Insert the retaining pins in the attach pins.
6. Using the control switches, raise the counterweight up under the superstructure frame.

NOTE: It may be necessary to jog the counterweight removal control valve switches to install the upper attach pins.

7. Remove the upper attach pins from the stowage bushings and install them into the upper counterweight and superstructure frame lugs.
8. Push in on the pins and turn to lock pin in the notch.

Reference Only

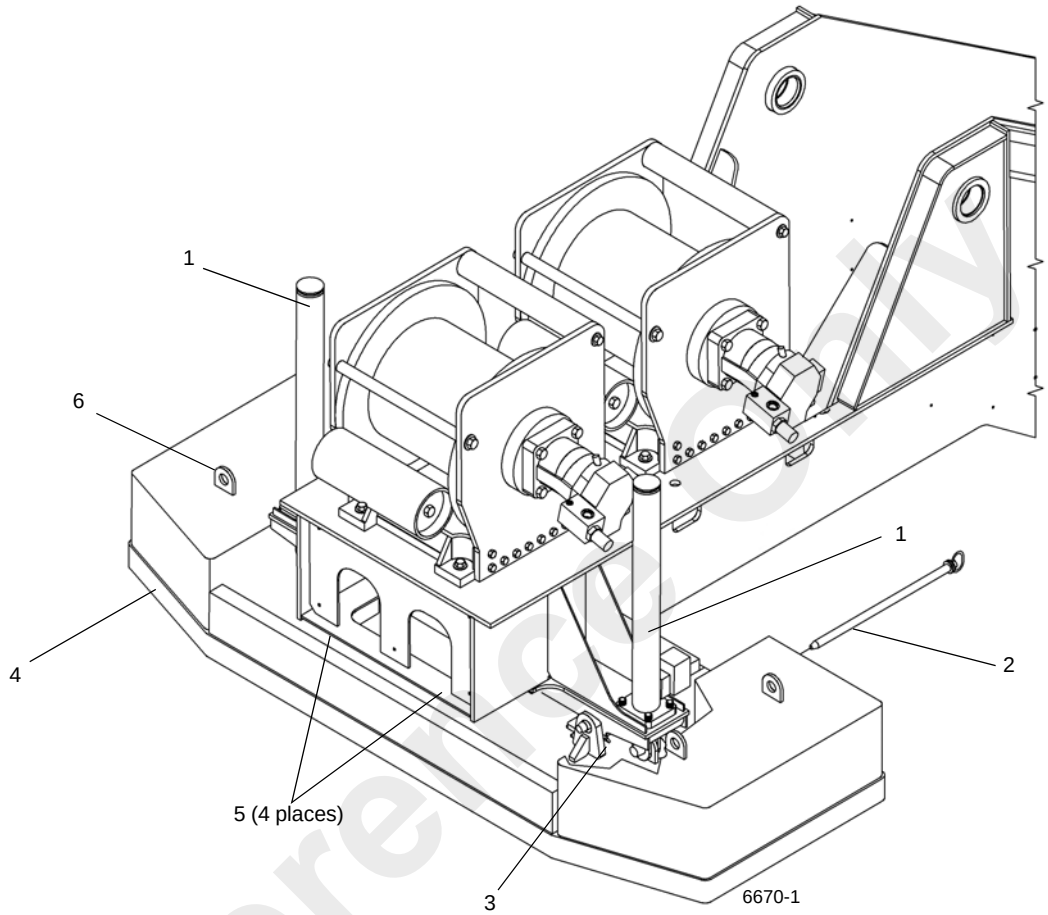

FIGURE 4-21

Item	Description
1	Removal Cylinders
2	Cylinder Attach Pins
3	Counterweight Attach Pins
4	6042 kg (13,300 lb) Counterweight
5	Leveling Bolts (4 places)
6	Counterweight Lifting Lugs (4 places)

9. Adjust the four counterweight leveling bolts (Figure 4-22) to eliminate any relative movement between the counterweight and the turntable.

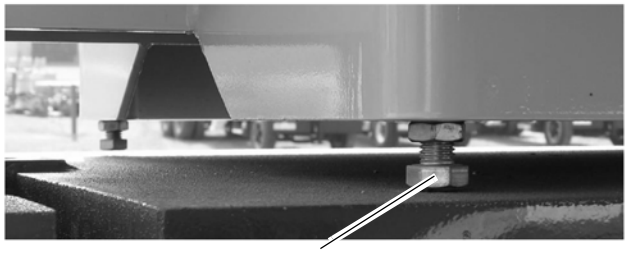

FIGURE 4-22

The crane is now ready for operation with the counterweight installed.

Reference Only

SECTION 5
LUBRICATION

SECTION CONTENTS

General 5-1
Environmental Protection 5-1
Lubricants and Lubrication Intervals 5-1
Standard Lubricants 5-2
Arctic Lubricants and Conditions 5-3
Surface Protection for Cylinder Rods. 5-6
Wire Rope Lubrication 5-6
Lubrication Points 5-7
CraneLUBE. 5-7
Safety. 5-7
Steering and Suspension. 5-8
Axles 5-10
Drive Train 5-12
Drive Train (continued) 5-14
Turntable 5-16
Outriggers 5-18
Boom 5-20
Hoist. 5-32
Hydraulic 5-34

GENERAL

Following the designated lubrication procedures is important in ensuring maximum crane lifetime and utilization. The procedures and lubrication charts in this section include information on the types of lubricants used, the location of the lubrication points, the frequency of lubrication, and other information.

ENVIRONMENTAL PROTECTION

Dispose of waste properly! Improperly disposing of waste can threaten the environment.

Potentially harmful waste used in Manitowoc cranes includes — but is not limited to — oil, fuel, grease, coolant, air conditioning refrigerant, filters, batteries, and cloths which have come into contact with these environmentally harmful substances.

Handle and dispose of waste according to local, state, and federal environmental regulations.

When filling and draining crane components, observe the following:

- Do not pour waste fluids onto the ground, down any drain, or into any source of water.
- Always drain waste fluids into leak proof containers that are clearly marked with what they contain.
- Always fill or add fluids with a funnel or a filling pump.
- Immediately clean up any spills.

LUBRICANTS AND LUBRICATION INTERVALS

The service intervals specified are for normal operation where moderate temperature, humidity, and atmospheric conditions prevail. In areas of extreme conditions, the service periods and lubrication specifications should be altered to meet existing conditions.

NOTE: All fluids and lubricants may be purchased by contacting an authorized Manitowoc distributor or Manitowoc Crane Care Parts Department.

CAUTION

Possible Equipment Damage!

Chassis grease lubricants must not be applied with air pressure devices as this lubricant is used on sealed fittings.

The multipurpose grease applied during manufacturing is of a lithium base. Use of a non-compatible grease could result in damage to equipment.

5

Reference Only

Standard Lubricants

Standard lubricants are used on all Manitowoc cranes unless the crane is ordered with a cold weather package. These standard lubricants are effective in temperatures down to -9°C (15°F). Refer to TABLE 5-1: for a list of the recommended standard lubricants.

TABLE 5-1: Standard Lubricants [Down to -9°C (15°F)]

Lubricant/Fluid	Grove Spec.	Recommended Lubricant		
		Type	Grade	Classification
Axle Gear Oil	6829012964	Century Unigear Semi-synthetic Texaco Multigear SS Chevron DELO	80W-90	
Engine Oil	6829104182	Conoco Fleet Supreme EC Mobil Delvac 1300 Super	15W-40	CJ-4
Hydraulic/Transmission Oil	6829006444	Kendall Hyken 052 Exxon Torque Fluid 56 Esso Torque Fluid 56 BP-Eldoran UTH & Trak-Tran 9 BP- Blend- 7367	10W-20	Must Meet John Deere Std. JDM J20c
		Exxon Mobil 424	10W-30	
Hoist Gear/Swing Drive Oil	6829100213	Mobil: Mobilfluid 629 Texaco: Meropa 150		AGMA No. 4 EP
Grease, Multipurpose	6829003477	Citgo Lithoplex MP# 2 Texaco Starplex Moly # 2 Phillips 66 Philube M Mobil Mobilgrese XHP 222 Special Chemtool Inc, Lube-A-Boom	NLGI 2	
Open Gear Lube	6829102971	Fuchs Ceplattyn 300 Spray	NLGI 1-2	
Antifreeze Coolant	6829101130	Old World Industries, Inc. Fleet Charge SCA Caterpillar DEAC Fleetguard Complete EG	Mix 50/50	
Supplemental Coolant Additive (SCA)	6829012858	Fleetguard DCA4 Fleetguard DCA2 Penray Pencool 3000		
Diesel Exhaust Fluid (DEF)	80019225	Fleetguard StableGuard™ Urea 32 Premix AdBlue® TerraCair Ultrapure® DEF		

Reference Only

Arctic Lubricants and Conditions

Temperatures Below -9°C (15°F)

Regions with ambient temperatures below -9°C (15°F) are considered arctic. In general, petroleum based fluids developed especially for low temperature service may be used with satisfactory results in these temperatures. However, certain fluids, such as halogenated hydrocarbons, nitro hydrocarbons, and phosphate ester hydraulic fluids, may not be compatible with hydraulic system seals and wear bands. Therefore, always check with an authorized Manitowoc distributor or Manitowoc Crane Care if in doubt of the suitability of a specific fluid or lubricant.

When operating in cold weather and regardless of the oil viscosity of the crane's lubricants, always follow the cold weather start-up and operating procedures described in the *Operator Manual* to ensure adequate lubrication during system warm-up and proper operation of all crane functions.

Cold Weather Package and Lubricants

Manitowoc recommends the following cold weather lubricants for use with ambient temperatures down to -29°C (-20°F) (TABLE 5-2) and -40°C (-40°F) (TABLE 5-3). But, these cold weather lubricants alone are not sufficient to operate the crane in extreme low temperatures. Therefore, it is also recommended that the crane be equipped with the following accessories:

29°C (-20°F) Package

- Battery heater
- Fuel line heater
- Engine hood insulation
- Fan clutch
- Radiator air shutters
- Air diverter
- Diesel fired cab heater
- Cold weather alternator
- Fluids suitable to -29°C (-20°F)
  - Arctic windshield washer fluid
  - Arctic fuel

-40°C (-40°F) Package

- Coolant heaters (to circulate warm coolant through heaters and engine)
- Fuel line heaters
- Transmission heater
- Battery heater
- Engine hood insulation
- Fan clutch
- Radiator air shutters
- Air diverter box (to allow intake air to be taken in from under the engine hood)
- Diesel fired cab heater
- Cold weather alternator
- Super-capacitor starting system
- Fluids suitable to -40°C (-40°F)

Reference Only

TABLE 5-2: Cold Weather Lubricants [Down to -29°C (-20°F)]

Lubricant/Fluid	Grove Spec.	Recommended Lubricant		
		Type	Grade	Classification
Axle Gear Oil	6829014058	Petro-Canada Traxon E Synthetic CITGO, Syntetic Gear Lube Eaton, Roadranger EP Mobil, Mobilube SCH Shell, Spirax S Sunoco Duragear EP	75W-90	
Engine Oil	80056036	Shell Rotella® T6 Mobil Delvac 1 ESP Caterpillar Cat DE0-ULS Cold Weather	0W-40	CJ-4
Transmission Oil	6829101559	Petro-Canada Duratran Synthetic THF Chevron All Weather THF Texaco TDH Oil SS		Must Meet John Deere Std. JDM J20c & J20d
Hoist Gear/Swing Drive Oil	6829103636	Petro-Canada ENDURATEX Synthetic EP 150 Mobil SHC629		AGMA No. 4 EP
Grease, Multipurpose	6829104275	Petro-Canada Precision Synthetic EP1 Mobil, Mobilith SHC 220	NLGI 2	
Open Gear Lube	6829102971	Fuchs Ceplattyn 300 Spray	NLGI 1-2	
Antifreeze Coolant	6829101130	Old World Industries, Inc. Fleet Charge SCA Caterpillar DEAC Fleetguard Complete EG	Mix 50/50	
Supplemental Coolant Additive (SCA)	6829012858	Fleetguard DCA4 Fleetguard DCA2 Penray Pencool 3000		
Hydraulic Oil	6829006993	Exxon Mobil Univis HVI	26	
Diesel Exhaust Fluid (DEF)	80019225	Fleetguard StableGuard™ Urea 32 Premix AdBlue® TerraCair Ultrapure® DEF		
Windshield Washer fluid	90037773	Splash De-icer		
Diesel Fuel	80069407	NOCO Kerosene, 3, UN1223, III Product #1	#1	NLOCK08

Reference Only

TABLE 5-3: Cold Weather Lubricants [Down to -40°C (-40°F)]

Lubricant/Fluid	Grove Spec.	Recommended Lubricant		
		Type	Grade	Classification
Axle Gear Oil	6829014058	Petro-Canada Traxon E Synthetic CITGO, Syntetic Gear Lube Eaton, Roadranger EP Mobil, Mobilube SCH Shell, Spirax S Sunoco Duragear EP	75W-90	
Engine Oil	80056036	Shell Rotella® T6 Mobil Delvac 1 ESP Caterpillar Cat DE0-ULS Cold Weather	0W-40	CJ-4
Transmission Oil	6829101559	Petro-Canada Duratran Synthetic THF Chevron All Weather THF Texaco TDH Oil SS		Must Meet John Deere Std. JDM J20c & J20d
Hoist Gear/Swing Drive Oil	6829103636	Petro-Canada ENDURATEX Synthetic EP 150 Mobil SHC629		AGMA No. 4 EP
Grease, Multipurpose	6829104275	Petro-Canada Precision Synthetic EP1 Mobil, Mobilith SHC 220	NLGI 2	
Open Gear Lube	6829102971	Fuchs Ceplattyn 300 Spray	NLGI 1-2	
Antifreeze Coolant	6829104212	Old World Industries, Inc. Fleet Charge SCA Pre-charged Fleetguard Compleat EG Petro-Canada	Mix 60/40	
Supplemental Coolant Additive (SCA)	6829012858	Fleetguard DCA4 Fleetguard DCA2 Penray Pencool 3000		
Hydraulic Oil	6829006993	Exxon Mobil Univis HVI	26	
Diesel Exhaust Fluid (DEF)	80019225	Fleetguard StableGuard™ Urea 32 Premix AdBlue® TerraCair Ultrapure® DEF		
Windshield Washer fluid	90037773	Splash De-icer		
Diesel Fuel	80069407	NOCO Kerosene, 3, UN1223, III Product #1	#1	NLOCK08

Reference Only

SURFACE PROTECTION FOR CYLINDER RODS

Steel cylinder rods include a thin layer of chrome plating on their surfaces to protect them from corroding. However, chrome plating inherently has cracks in its structure which can allow moisture to corrode the underlying steel. At typical ambient temperatures, hydraulic oil is too thick to penetrate these cracks. Normal machine operating temperatures will allow hydraulic oil to warm sufficiently to penetrate these cracks and if machines are operated daily, protect the rods. Machines that are stored, transported, or used in a corrosive environment (high moisture, rain, snow, or coastline conditions) need to have the exposed rods protected more frequently by applying a protectant. Unless the machine is operated daily, exposed rod surfaces will corrode. Some cylinders will have rods exposed even when completely retracted. Assume all cylinders have exposed rods, as corrosion on the end of the rod can ruin the cylinder.

It is recommended that all exposed cylinder rods be protected using Boeshield® T-9 Premium Metal Protectant. Manitowoc Crane Care has Boeshield® T-9 Premium Metal Protectant available in 12 oz. aerosol cans by ordering part number 9999101803 through the Parts Department.

Cylinder operation and inclement weather will remove the Boeshield® protectant; therefore, inspect machines once a week and reapply Boeshield® to unprotected rods.

WIRE ROPE LUBRICATION

Wire rope is lubricated during manufacturing so that the strands, and individual wires in strands, may move as the rope moves and bends. A wire rope cannot be lubricated sufficiently during manufacture to last its entire life. Therefore, new lubricant must be added periodically throughout the life of a rope to replace factory lubricant which is used or lost. For more detailed information concerning the lubrication and inspection of wire rope, refer to Wire Rope in Section 1- Introduction in the *Service Manual*.

Reference Only

LUBRICATION POINTS

A regular frequency of lubrication must be established for all lubrication points. Normally, this is based on component operating time. The most efficient method of keeping track of lube requirements is to maintain a job log indicating crane usage. The log must use the engine hourmeter to ensure coverage of lube points that will receive attention based on their readings. Other lubrication requirements must be made on a time basis, i.e. weekly, monthly, etc.

All oil levels are to be checked with the crane parked on a level surface in transport position, and while the oil is cold, unless otherwise specified.

On plug type check points, the oil levels are to be at the bottom edge of the check port.

On all hoists with a check plug in the drum, the fill plug shall be directly on top of the hoist, and the check plug level.

All grease fittings are SAE Standard unless otherwise indicated. Grease non-sealed fittings until grease is seen extruding from the fitting. One ounce(28 grams) of EP-MPG equals one pump on a standard one pound (0.45 kg) grease gun.

Over lubrication on non-sealed fittings will not harm the fittings or components, but under lubrication will definitely lead to a shorter lifetime.

Unless otherwise indicated, items not equipped with grease fittings, such as linkages, pins, levers, etc., should be lubricated with oil once a week. Motor oil, applied sparingly, will provide the necessary lubrication and help prevent the formation of rust. An Anti-Seize compound may be used if rust has not formed, otherwise the component must be cleaned first.

Grease fittings that are worn and will not hold the grease gun, or those that have a stuck check ball, must be replaced.

Where wear pads are used, cycle the components and relubricate to ensure complete lubrication of the entire wear area.

CraneLUBE

Manitowoc highly recommends the use of CraneLUBE lubricants to increase your crane's reliability and performance. Contact your Manitowoc distributor for information about Manitowoc's CraneLUBE lubrication program.

Safety

To lubricate many of the locations the engine will need to be started. After positioning areas of the unit for lubrication the engine must be turned off and the moved areas stable before approaching.

DANGER

Crushing Hazard!

Movement of the superstructure and the boom may create a crushing and/or pinching hazard. Failure to observe this warning could result in death or serious injury.

Reference Only

Steering and Suspension						
Item	**Lube Point Description**	**Figure No.**	**Approved Lubricant**	**Lube Capacity**	**Lube Interval**	**Application**
1	Steer Cylinder Pivot Pins	Figure 5-1	EP-MPG Extreme Pressure Multipurpose Grease 6829003477	Until grease extrudes	500 hours or 3 months	8 grease fittings
2	Upper and Lower King Pins	Figure 5-1	EP-MPG Extreme Pressure Multipurpose Grease 6829003477	Until grease extrudes	500 hours or 3 months	8 grease fittings
3	Fifth Wheel Pivots	Figure 5-1	EP-MPG Extreme Pressure Multipurpose Grease 6829003477	Until grease extrudes	500 hours or 3 months	2 grease fittings
4	Lockout Cylinder Pivot Pins	Figure 5-1	EP-MPG Extreme Pressure Multipurpose Grease 6829003477	Until grease extrudes	500 hours or 3 months	4 grease fittings

Reference Only

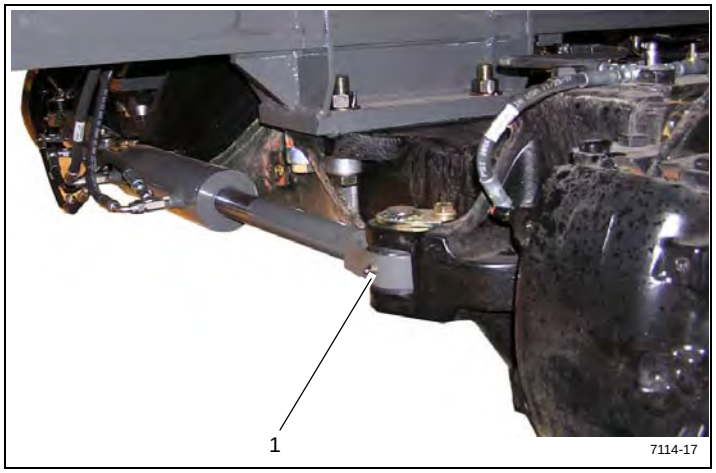

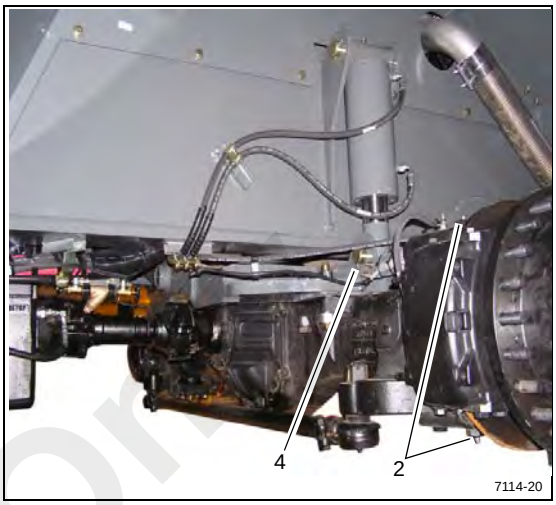

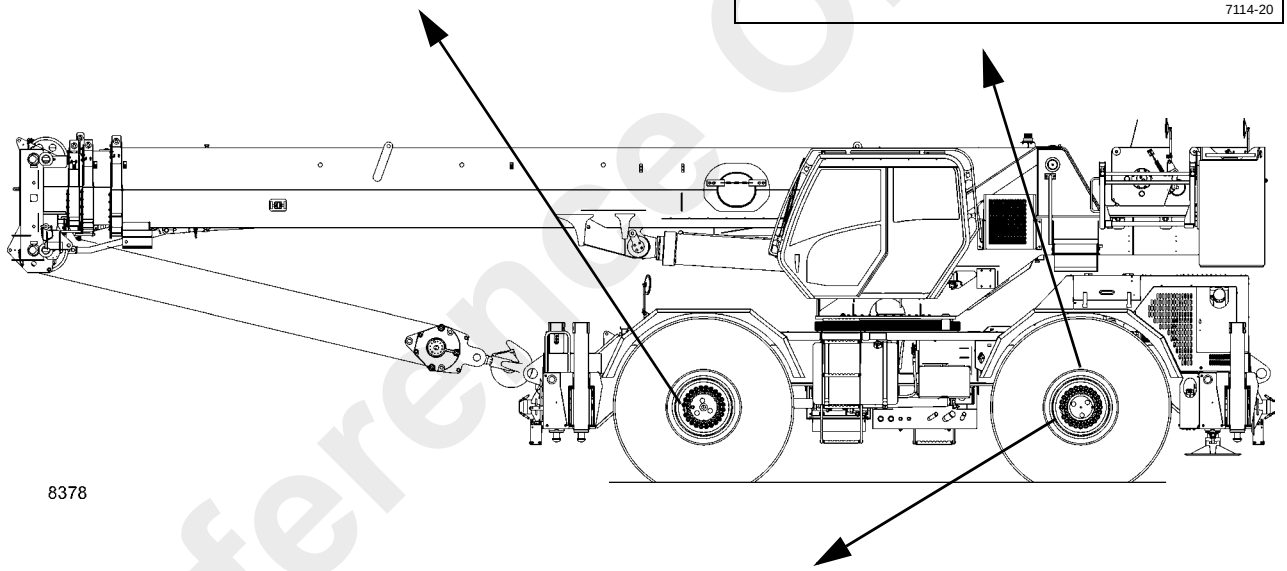

FIGURE 5-1

Reference Only

Item	Lube Point Description	Figure No.	Approved Lubricant	Lube Capacity	Lube Interval	Application
Axles						
11	Differentials	Figure 5-2	GL-5 Extended Service Interval Gear Lubricant 6829012964	22.7 l (48 pt)	• Check level every 500 hours or 3 months • Drain and fill every 4000 hours or 2 years	Fill to bottom of hole in housing on the steer cylinder side
NOTE: Lube level close enough to the hole to be seen or touched is not sufficient. It must be level with the hole. When checking lube level, also check and clean housing breathers. **CAUTION:** Use of non-approved lubricant may damage components and/or invalidate published lubricant intervals. **CAUTION:** If the makeup amount is substantially more than 0.23 l (0.5 pt), check for leaks.						
12	Planetary Hubs and Wheel Bearings	Figure 5-2	GL-5 Extended Service Interval Gear Lubricant 6829012964	3.8 l (8 pt)	• Check level every 500 hours or 3 months • Drain and fill every 4000 hours or 2 years	Fill to the bottom of the level hole in the housing with the fill plug and the oil level mark horizontal.
CAUTION: Use of non-approved lubricant may damage components and/or invalidate published lubricant intervals.						

Reference Only

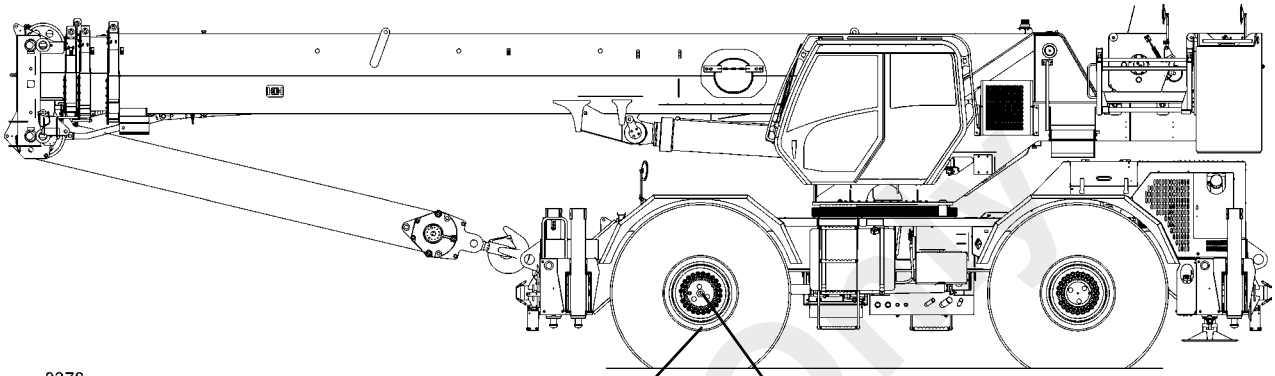

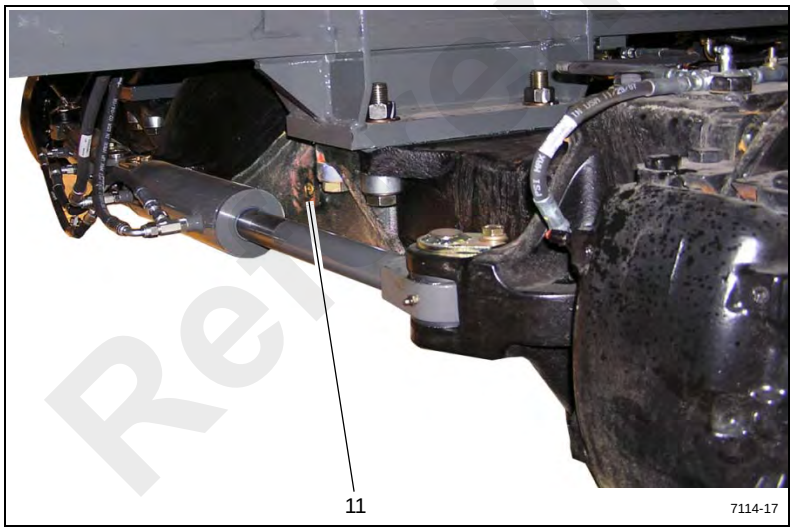

FIGURE 5-2

Reference Only

Item	Lube Point Description	Figure No.	Approved Lubricant	Lube Capacity	Lube Interval	Application
Drive Train						
20a **20b**	a. Engine Crankcase b. Filter	Figure 5-3	EO-15W/40 Engine Oil SAE 15W-40 Tier 3 and Tier 4 Engine - 6829104182	18.9 l (20 qt)	• Check level every 10 hours or daily • Drain, fill and replace filter every: 500 hours (0-500 ppm sulfur fuel); 400 hours (500-5000 ppm sulfur fuel); 250 hours (>5000 ppm sulfur fuel)	• Through fill cap to FULL mark on dipstick • Filter located on left side of frame beneath radiator
21a **21b**	a. Transmission, Torque Converter, Dipstick b. Filter	Figure 5-3	HYDO Hydraulic Oil 6829006444	37.9 l (40 qt)	• Check level every 10 hours or daily • Drain and refill every 1000 hours or 6 months • Change transmission filter after first 50 and 100 hours of service, then every 500 hours thereafter	Through fill pipe to FULL mark on dipstick

NOTE:

- Check the transmission fluid level with engine running at 850 rpm idle and the converter oil at 82°C to 93°C (180°F to 200°F). Do not attempt an oil level check with cold oil. To bring the oil temperature to this range, it is necessary to either work the crane or stall the converter. Converter stall should be accomplished by engaging shift lever in forward high range with the brakes applied and then accelerating the engine to half or three-quarter throttle. Hold the stall until the required converter temperature is reached and stabilized. (Do not operate the converter at stall condition for longer than 30 seconds at one time. Shift to neutral for 15 seconds and repeat the procedure until the desired temperature is reached. Excessive temperature, i.e, 120°C (250°F) maximum will cause damage to transmission clutches, fluid, converter and seals.)
- Drain the oil at 65°C to 93°C (150°F to 200°F).
- Transmission filters are located on the outside left hand frame in the area of the hydraulic oil cooler inside left hand engine cover.
- To add fluid:
  - **a.** Fill to FULL mark on dipstick
  - **b.** Run engine at 850 rpm to prime torque converter and lines
  - **c.** Check oil level with engine running at 850 rpm and converter oil at 82°C to 93°C (180°F to 200°F). Add oil to bring oil level to FULL mark on dipstick.

22	Engine Cooling System and SCA Levels	Figure 5-3	AFC 50/50 50/50 Blended Fully Formulated Antifreeze Coolant 6829101130 SCA 6829012858	37.9 l 40 qt	• Check coolant level every 10 hours or daily • Check SCA levels every 500 hours • Check coolant for contamination every 1000 hours	See *Service Manual*
23	Coolant Strainer (Cab Heater)	Figure 5-3	---	---	Clean strainer screen after first 100 hours and every 2000 hours or 12 months intervals thereafter.	Close shutoff valves. Unscrew hex plug to clean filter.

Reference Only

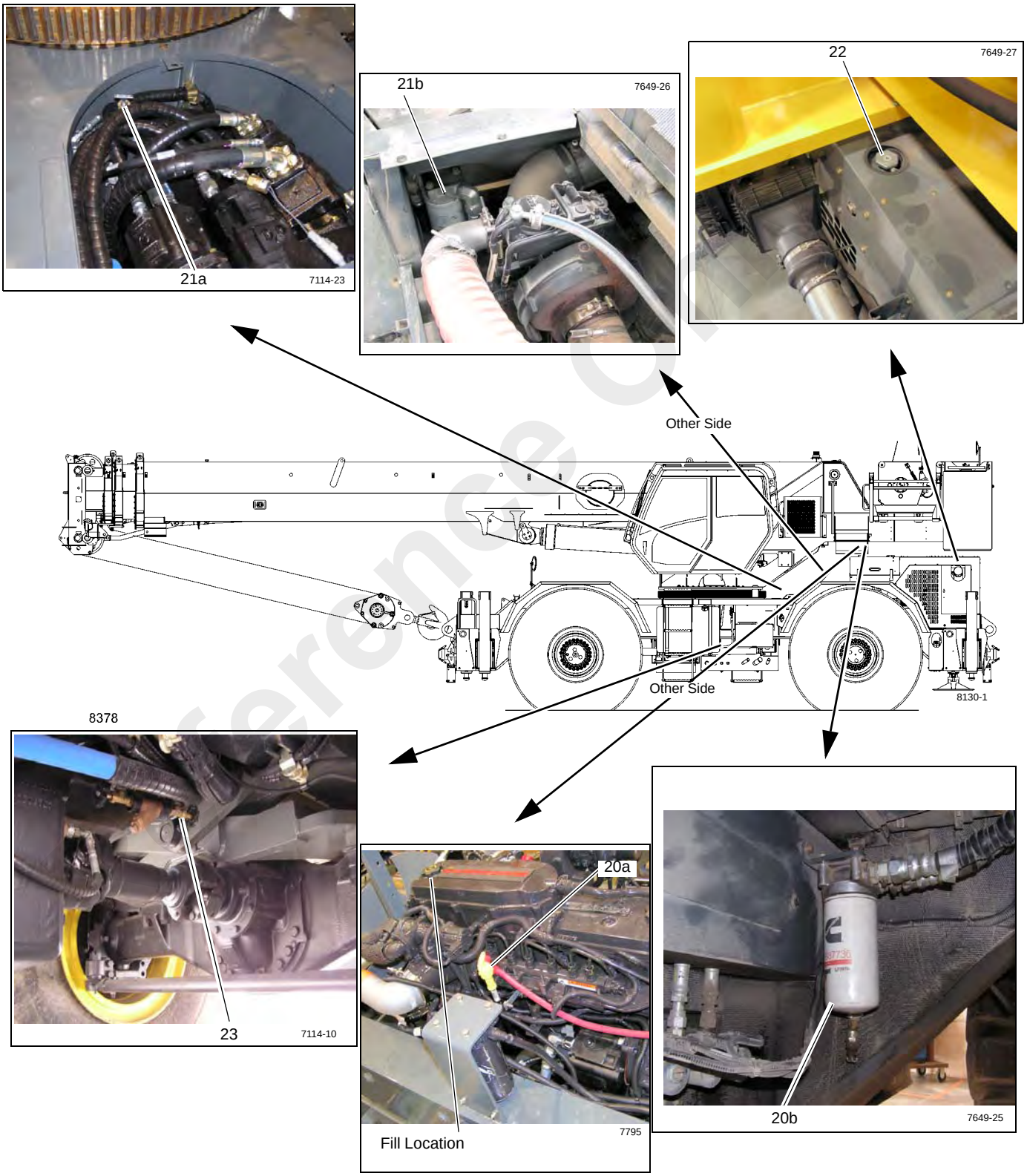
21a
7114-23
21b
7649-26
22
7649-27
Other Side
Other Side
8130-1
8378
23
7114-10
20a
7795
Fill Location
20b
7649-25

FIGURE 5-3

Item	Lube Point Description	Figure No.	Approved Lubricant	Lube Capacity	Lube Interval	Application
Drive Train (continued)						
24a **24b**	Air Cleaner Filters Pre-cleaner	Figure 5-4	---	---	• Replace primary filter element when Engine Warning Light blinks when ignition key is turned on or fault code 5576 or 3341 is displayed. Replace secondary filter every third time primary filter is replaced. • In severe dust conditions the pre-cleaner may need to be serviced.	Right hand side of engine hood.
25a **25b**	a. Fuel Filter b. Water Separator	Figure 5-4	---	---	• Change filter every 500 hours or 6 months. • Drain water trap every 10 hours or daily.	• Fuel filter is located on the intake manifold of engine. • Water Separator is located near oil cooler.
NOTE: During replacement of the water separator, take note of the direction of the arrow. The arrow must point towards the fuel filter						
26a **26b**	Driveline - Slip Joints	Figure 5-4	EP-MPG Extreme Pressure Multipurpose Grease 6829003477	Until grease extrudes	500 hours or 3 months	2 grease fittings

Reference Only

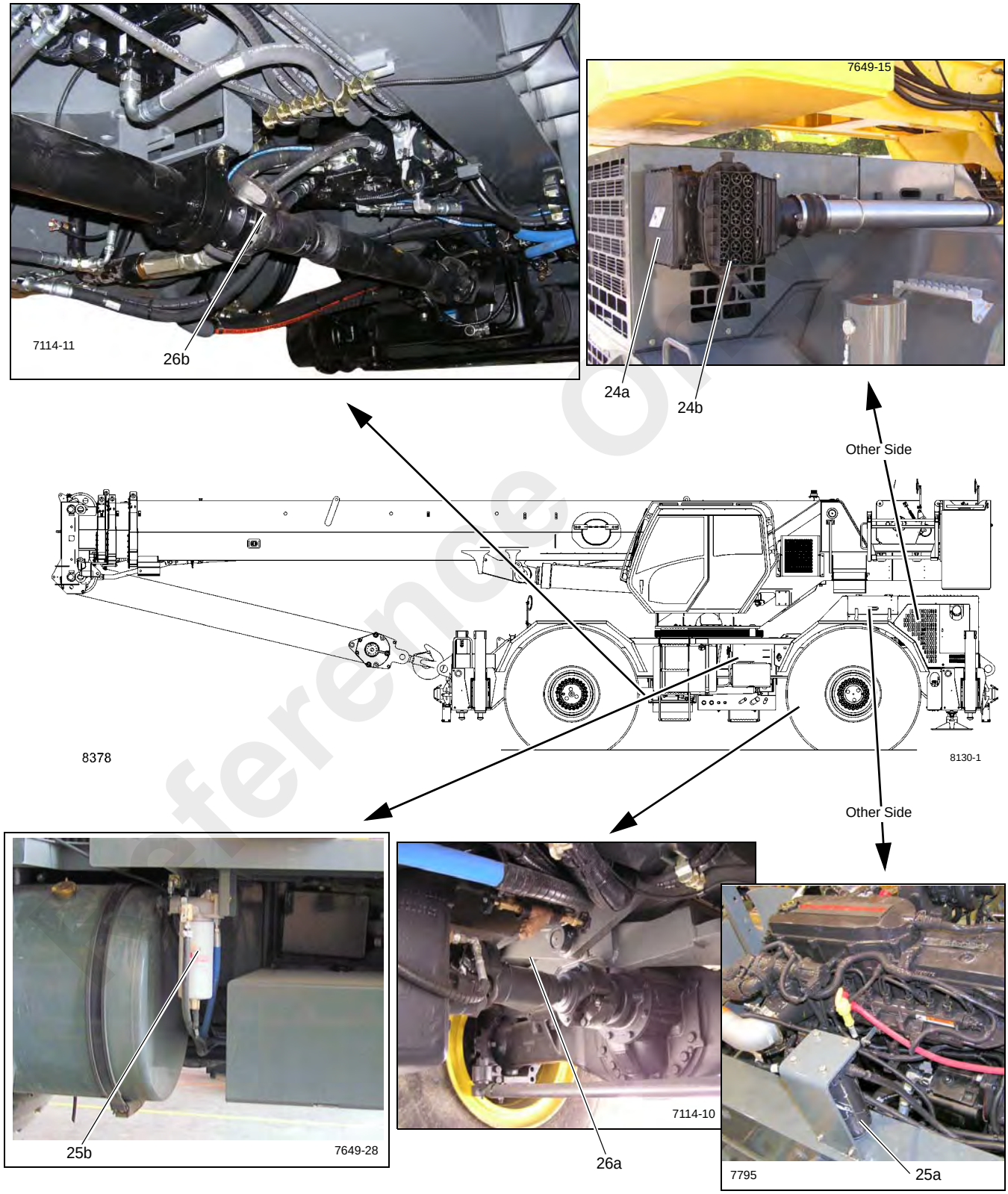
7114-11
26b
7649-15
24a
24b
Other Side
8378
8130-1
Other Side
25b
7649-28
7114-10
26a
7795
25a

FIGURE 5-4

Item	Lube Point Description	Figure No.	Approved Lubricant	Lube Capacity	Lube Interval	Application
Turntable						
40	Turntable Gear Box	Figure 5-5	AGMA No. 4 Extreme Pressure Gear Lubricant 6829100213	5 l (5.25 qt)	• Check and fill every 50 hours • Drain and fill after first 250 hours and every 500 hours or 12 months thereafter.	Fill to max level on level plug.
41a	Turntable Gear and Drive Pinion	Figure 5-5	EP-OGL Open Gear Lubricant 6829102971	Coat all teeth	500 hours or 6 months	Spray on
41b	Turntable Swivel Lock Pin	Not shown	EP-OGL Open Gear Lubricant 6829102971	Coat pin	500 hours or 6 months	Spray on
42	Turntable Bearing	Figure 5-5	EP-MPG Extreme Pressure Multipurpose Grease 6829003477	Until grease extrudes the whole circumfer-ence of the bearing	500 hours or 6 months	2 grease fittings at the front of the turntable.
NOTE: Rotate the turntable 90° and apply grease to fittings. Continue rotating 90° and grease the fittings until the whole bearing is greased.						

Reference Only

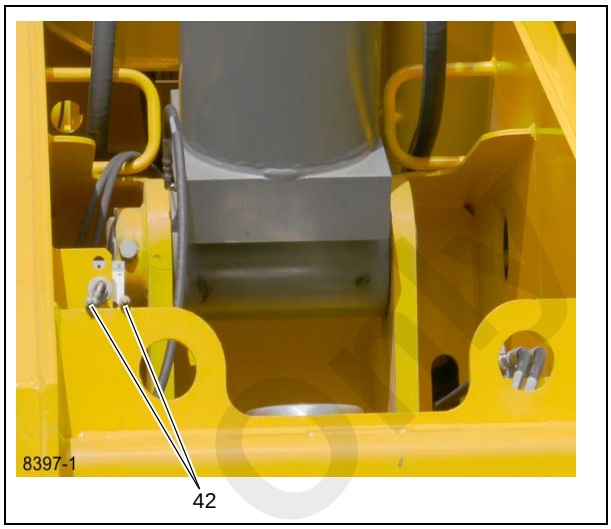

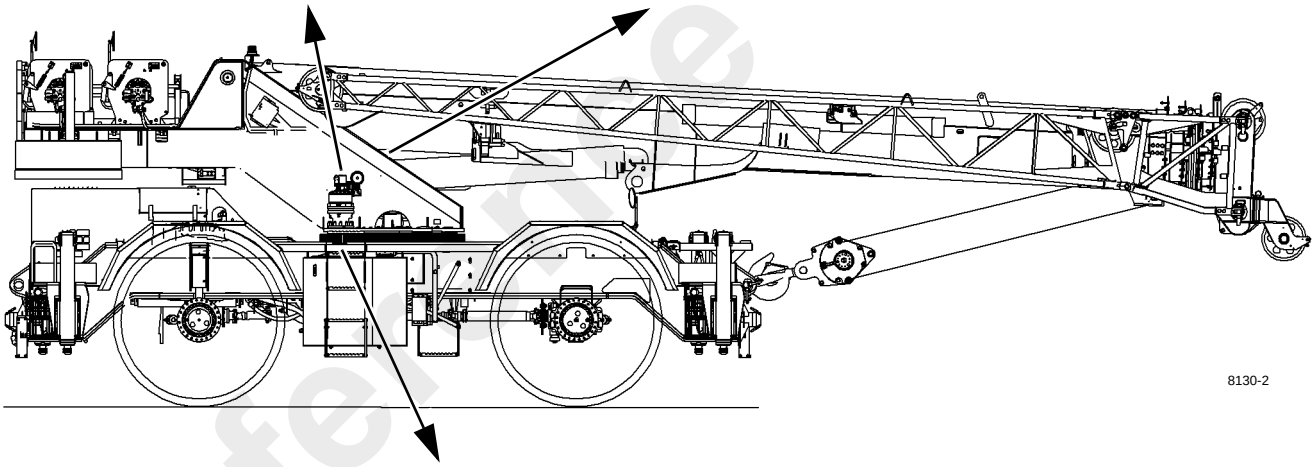

FIGURE 5-5

Reference Only

5

Item	Lube Point Description	Figure No.	Approved Lubricant	Lube Capacity	Lube Interval	Application
Outriggers						
50	Outrigger Beams	Figure 5-6	EP-MPG Extreme Pressure Multipurpose Grease 6829003477	---	50 hours or 1 week	Brush lubricant on bottom of outrigger beams
51	Jack Cylinder Support Tubes	Figure 5-6	EP-MPG Extreme Pressure Multipurpose Grease 6829003477	---	50 hours or 1 week	Brush lubricant on ID of jack cylinder support tubes (4) places and wear bands before installing jack cylinders
52	Jack Cylinder Barrels	Figure 5-6	EP-MPG Extreme Pressure Multipurpose Grease 6829003477	---	50 hours or 1 week	Brush on

Reference Only

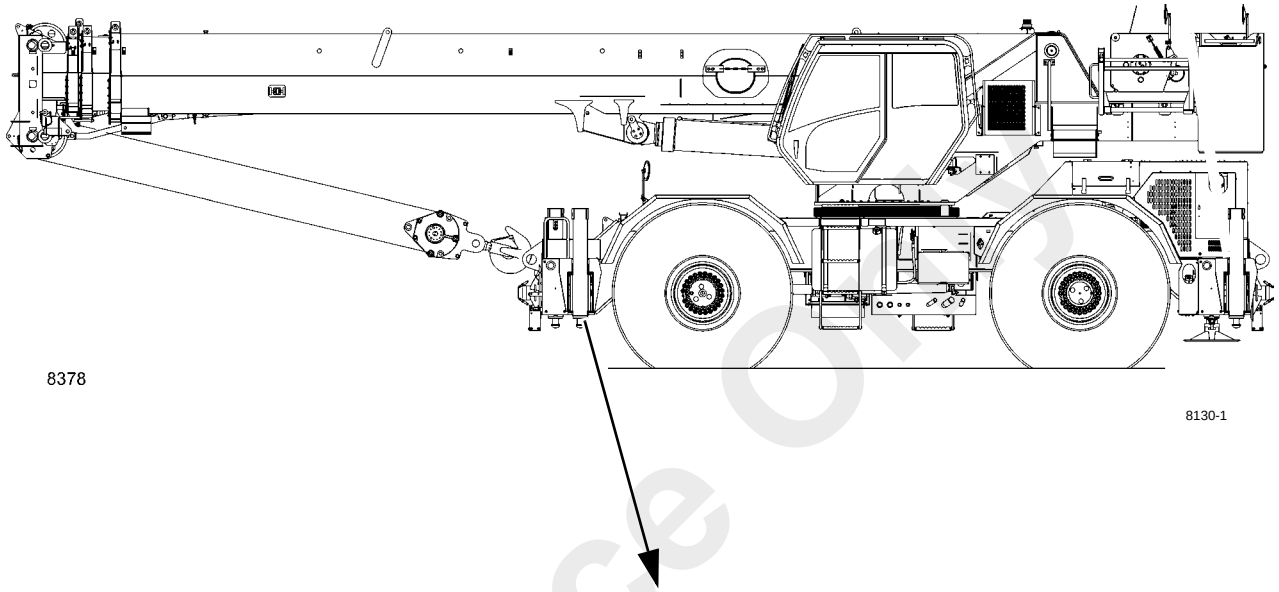

FIGURE 5-6

Reference Only

Item	Lube Point Description	Figure No.	Approved Lubricant	Lube Capacity	Lube Interval	Application
Boom						
60	Upper Lift Cylinder Pin	Figure 5-7	EP-MPG Extreme Pressure Multipurpose Grease 6829003477	Until greases extrudes	500 hours or 3 months	2 grease fittings
61	Lower Lift Cylinder Pin	Figure 5-7		Until greases extrudes	500 hours or 3 months	2 grease fittings
70	Hook Block Swivel Bearing	Figure 5-7		Until grease extrudes	250 hours or 3 months	1 grease fitting
71	Hook Block Sheaves	Figure 5-7		Until grease extrudes	250 hours or 3 months	5 grease fittings - 65 Ton

Reference Only

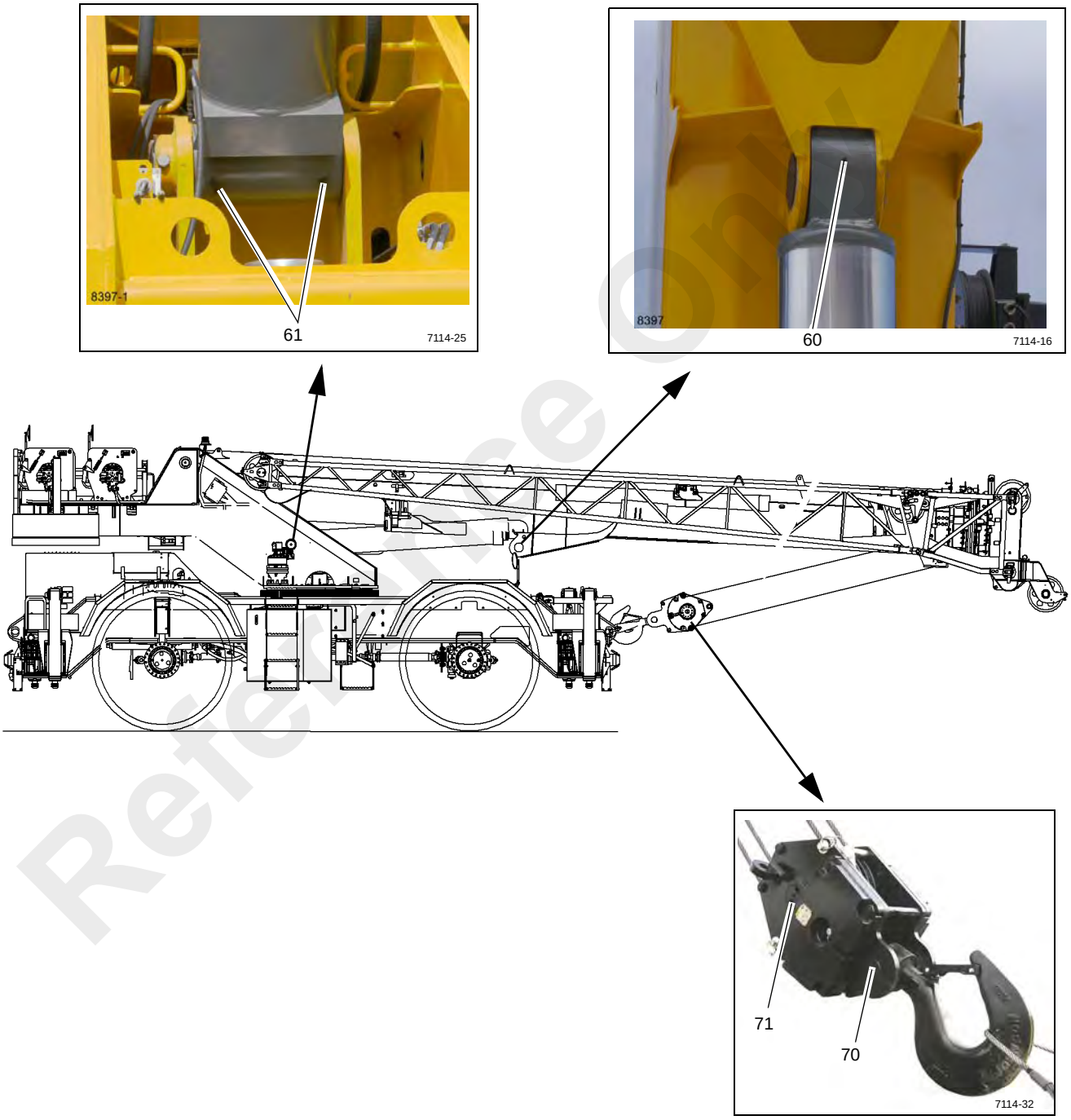

FIGURE 5-7

Reference Only

5

Item	Lube Point Description	Figure No.	Approved Lubricant	Lube Capacity	Lube Interval	Application	Boom Operation Mode and Length
Boom (continued)							
NOTE: Crane Setup: Machine Shall be set up on firm level surface with fully extended outriggers and counterweight installed. Ensure the crane is level. Boom must be directly over the front and the swing lock engaged. Set boom angle at zero degrees.' Do not exceed 38.1 m (125.3 ft) boom length in Auto Mode A. Do not exceed 34.2 m (112.3 ft) boom length in Auto Mode B. All lubrication points can be accessed by operating the crane in the 0001 RCL operating mode by using both A and B boom configurations. **CAUTION:** Do not operate the crane in RCL bypass to lubricate the boom.							
72	Telescope Cylinder Wear Pads	Figure 5-8	EP-MPG Extreme Pressure Multipurpose Grease 6829003477	Thoroughly coat	125 hours/ 3 months	• 12 places • Extend boom for access through holes in side of sections 3 & 4	• N/A
73A	Tel 1 - Rear internal Side and Bottom Wear Pads	Figure 5-8		Thoroughly coat all areas the wear pad moves on	250 hours or 3 months	• 2 points 15 places • Extend boom for access through holes in side of boom sections • Spread grease on bottom plates, top plates, and side plates of boom in area that wear pads move on	• [B] 18.7 m (61.4 ft)
73B	Boom Tele 2, 3, & 4 Rear internal Side and Bottom Wear Pads	Figure 5-8		Thoroughly coat all areas the wear pad moves on	250 hours or 3 months		• [A] 34.2 m (112.5 ft
NOTE: Lubricate items more frequently than interval indicated in table if environmental conditions and/or operating conditions necessitate.							

Reference Only

Item	Lube Point Description	Figure No.	Approved Lubricant	Lube Capacity	Lube Interval	Application	Boom Operation Mode and Length
74A	Boom Tele 1 - Rear Upper Wear Pads -	Figure 5-8	EP-MPG Extreme Pressure Multipurpose Grease 6829003477	Thoroughly coat all areas the wear pad moves on	50 hours or 1 week	• 4points • 16 places • Extend boom, aligning grease fittings with holes in side of each boom section	• [B] 18.7 m (61.4 ft)
74 B	Boom Tele 2, 3, & 4 Rear Upper Wear Pads	Figure 5-8	EP-MPG Extreme Pressure Multipurpose Grease 6829003477	Thoroughly coat all areas the wear pad moves on	50 hours or 1 week	• 4 Points • 16 places • Extend boom, aligning grease fittings with holes in side of each boom section	• [A] 34.2 m (112.5 ft

NOTE: Lubricate items more frequently than interval indicated in table if environmental conditions and/or operating conditions necessitate.

CAUTION: Do not apply excessive pressure or force when greasing the wear pad, as this can cause the grease fitting to separate from the wear pad. Only apply grease until resistance is felt.

Reference Only

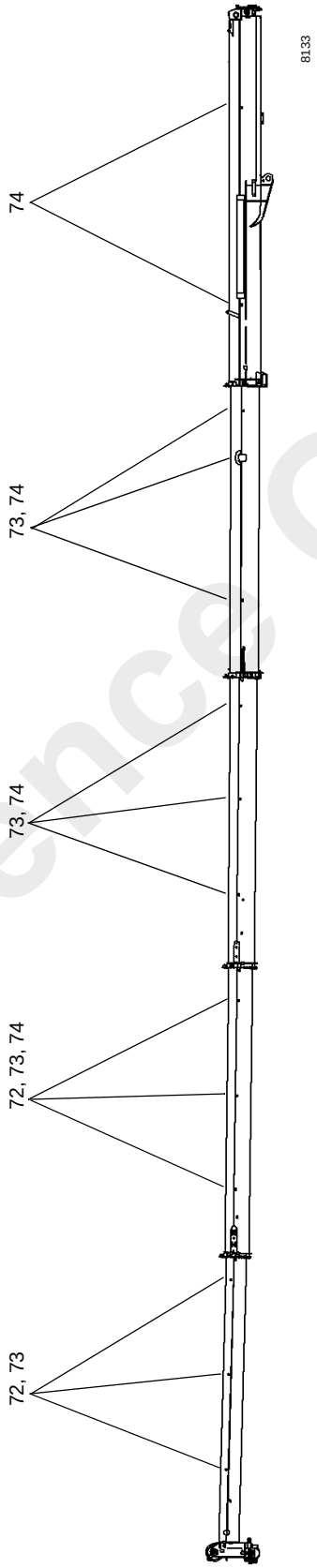

FIGURE 5-8

Reference Only

Item	Lube Point Description	Figure No.	Approved Lubricant	Lube Capacity	Lube Interval	Application	Boom Operation Mode and Length
Boom (continued)							
75A	Boom Tele 1 Section Lower Front Upper and Lower Wear Pads	Figure 5-9	EP-MPG Extreme Pressure Multipurpose Grease 6829003477	Thoroughly coat all areas the wear pad moves on	50 hours or 1 week	• 8 Points • 24 places by brush • Spread grease on the outside of Tele 1, 2, 3, & 4 in the area that the wear pads move on	• [B] 18.7 m (61.4 ft)
75B	Boom Section Lower Front and Upper Front Wear Pads			Thoroughly coat all areas the wear pad moves on	50 hours or 1 week		• [A] 34.2 m (112.5 ft
NOTE: Lubricate items more frequently than interval indicated in table if environmental conditions and/or operating conditions necessitate.							
76a	Extend Cable Sheaves	Figure 5-9	EP-MPG Extreme Pressure Multipurpose Grease 6829003477	Until grease extrudes	250 hours or 3 months	• 2 grease fittings • Extend Tele 1 approx. 3 ft for access through Tele 3 and Tele 4 holes	• [B] 12 m (39.4 ft)
76b	Extend Cable Sheaves	Figure 5-9		Until grease extrudes	250 hours or 3 months	• 4 grease fittings • Extend Tele 2 approx. 3 ft for access through holes	• [A] 12.8 m (42 ft

Reference Only

5

Item	Lube Point Description	Figure No.	Approved Lubricant	Lube Capacity	Lube Interval	Application	Boom Operation Mode and Length
77a	Retract Cable Sheaves	Figure 5-9	EP-MPG Extreme Pressure Multipurpose Grease 6829003477	Until grease extrudes	250 hours or 3 months	• 2 Points • 2 grease fittings • Fully extend Tele 1, then extend Tele 2 until grease fittings are accessible through large access hole in side of Tele 1	• [B] 26.2 m (86 ft
77b	Retract Cable Sheaves	Figure 5-9		Until grease extrudes	250 hours or 3 months	• 2 Points • 2 grease fittings • Fully extend Tele 2 and Tele 4, then access grease fittings at back of Tele 3 through access holes toward the front of Tele 2	• [A] 34.3 m (112.5 ft

Reference Only

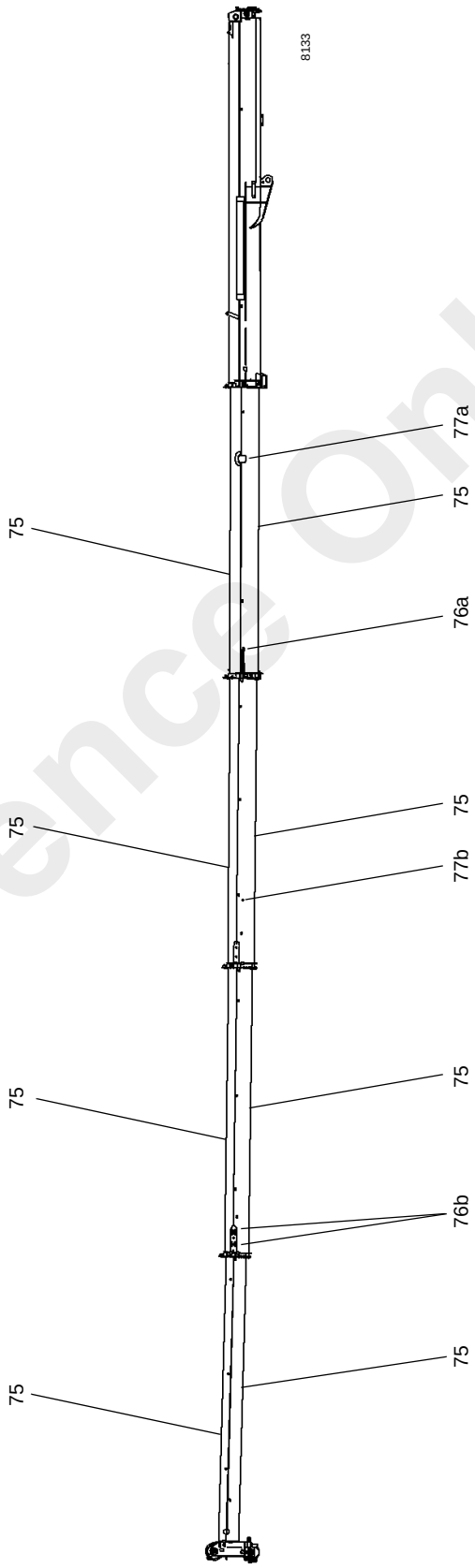

FIGURE 5-9

Reference Only

Item	Lube Point Description	Figure No.	Approved Lubricant	Lube Capacity	Lube Interval	Application
Boom (continued)						
78	Boom Pivot Shaft	Figure 5-10	EP-MPG Extreme Pressure Multipurpose Grease 6829003477	Until grease extrudes	250 hours or 3 months	2 grease fittings
79	Boom Extension Sheave	Figure 5-10		Until grease extrudes	250 hours or 3 months	1 grease fitting
81	Upper Boom Nose Sheave	Figure 5-10		Until grease extrudes	250 hours or 3 months	2 grease fittings (1) per sheave
82	Lower Boom Nose Sheave	Figure 5-10		Until grease extrudes	250 hours or 3 months	5 grease fittings
83	Auxiliary Boom Nose Sheave	Figure 5-10		Until grease extrudes	250 hours or 3 months	1 grease fitting

Reference Only

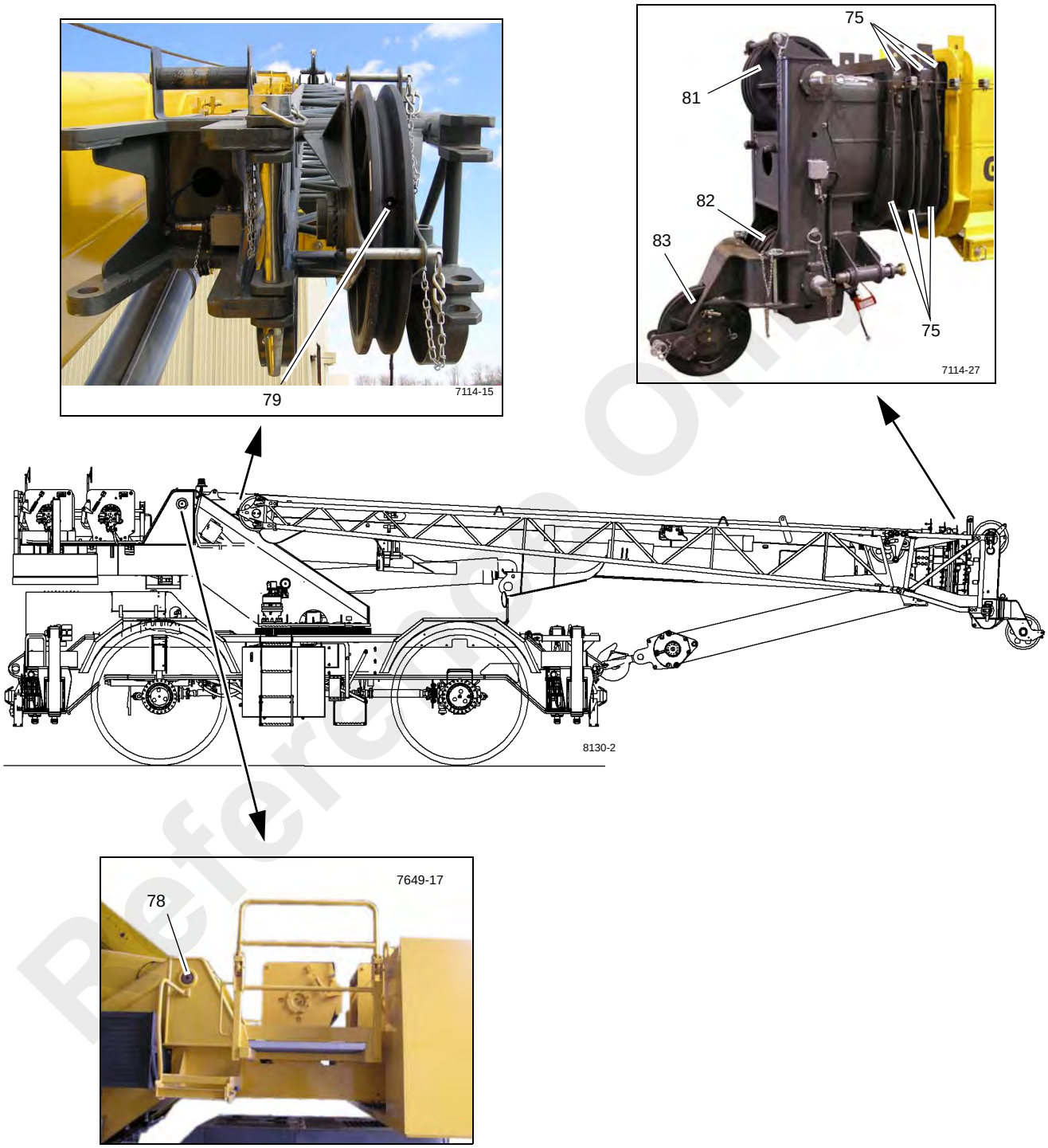

FIGURE 5-10

Reference Only

Item	Lube Point Description	Figure No.	Approved Lubricant	Lube Capacity	Lube Interval	Application
Boom (continued)						
84	Mast Sheave	Figure 5-11	EP-MPG Extreme Pressure Multipurpose Grease 6829003477	Until grease extrudes	500 hours or 12 months	1 grease fitting
85	Overhaul Ball	Figure 5-11		Until grease extrudes	250 hours or 3 months	1 grease fitting

Reference Only

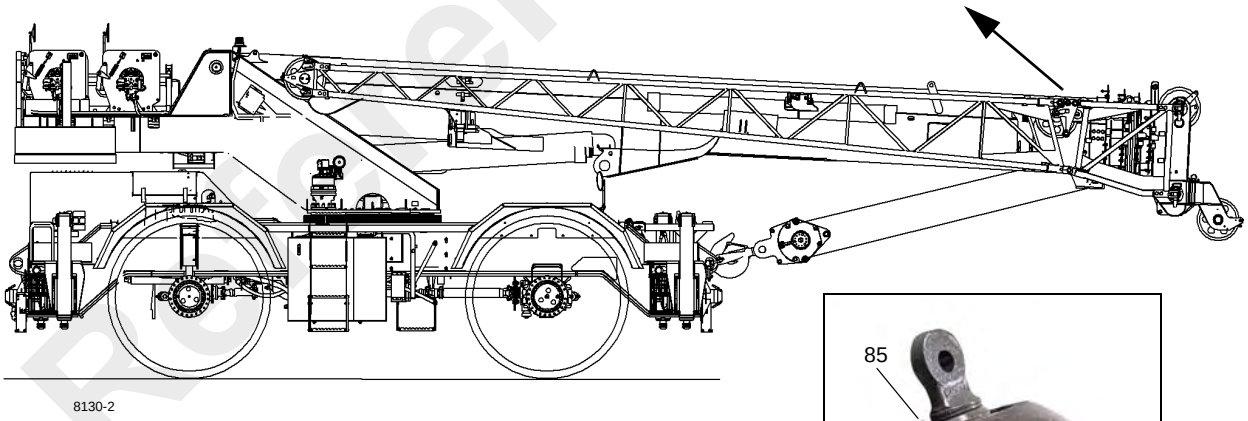

FIGURE 5-11

Reference Only

5

Item	Lube Point Description	Figure No.	Approved Lubricant	Lube Capacity	Lube Interval	Application
Hoist						
92	Main Hoist	Figure 5-12	AGMA Extreme Pressure Gear Lubricant 6829100213	14.7 l (15.5 qt)	• Check and fill every 50 hours or weekly • Drain and fill every 1000 hours or 12 months	Oil must be visible in the sight glass and the level no more than 3 mm (0.13 in) from the top of the sight glass
93a	Auxiliary Hoist	Figure 5-12	AGMA Extreme Pressure Gear Lubricant 6829100213	14.7 l (15.5 qt)	• Check and fill every 50 hours or weekly • Drain and fill every 1000 hours or 12 months	Oil must be visible in the sight glass and the level no more than 3 mm (0.13 in) from the top of the sight glass
NOTE: Line up the Fill/Drain Plug with the upper access hole (A). Let hoist sit idle for 20 minutes for an accurate reading. If oil level is not visible in sight glass, the hoist is under filled. Oil escaping from vent plug (B) or is more than 3 mm (0.13 in) from the top of the sight glass is an indication the hoist is overfilled. If hoist is over filled drain the oil from the Fill/Drain Plug at the upper access hole. When replacing the oil, align the Fill/Drain Plug with the lower access hole (C) and drain the oil. Failure to align the Fill/Drain Plug with the upper access hole prior to checking the oil level will result in an inaccurate reading.						
93b	Cable Follower (Arms)	Figure 5-12	EP-MPG Extreme Pressure Multipurpose Grease 6829003477	Thoroughly coat	250 hours or 3 months	Spray on
NOTE: Lubricate more frequently than interval indicated if environmental and/or operating conditions necessitate.						

Reference Only

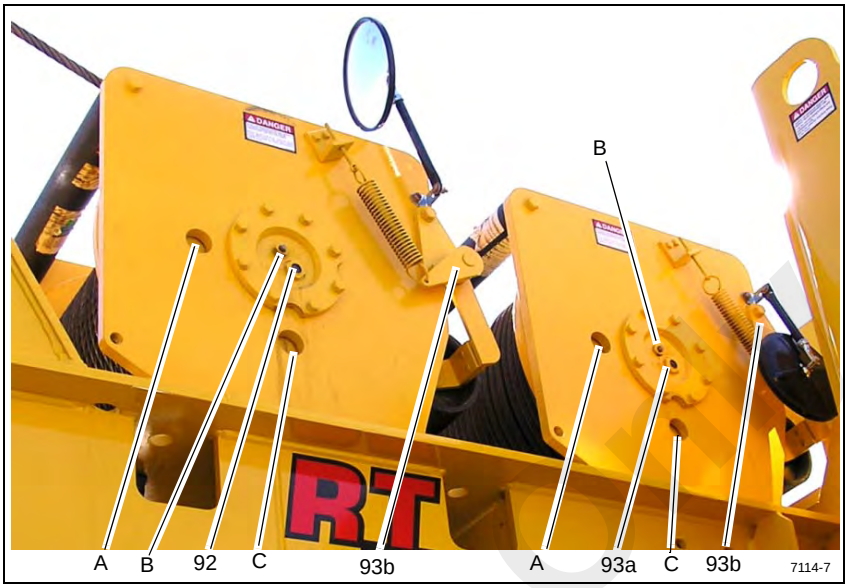

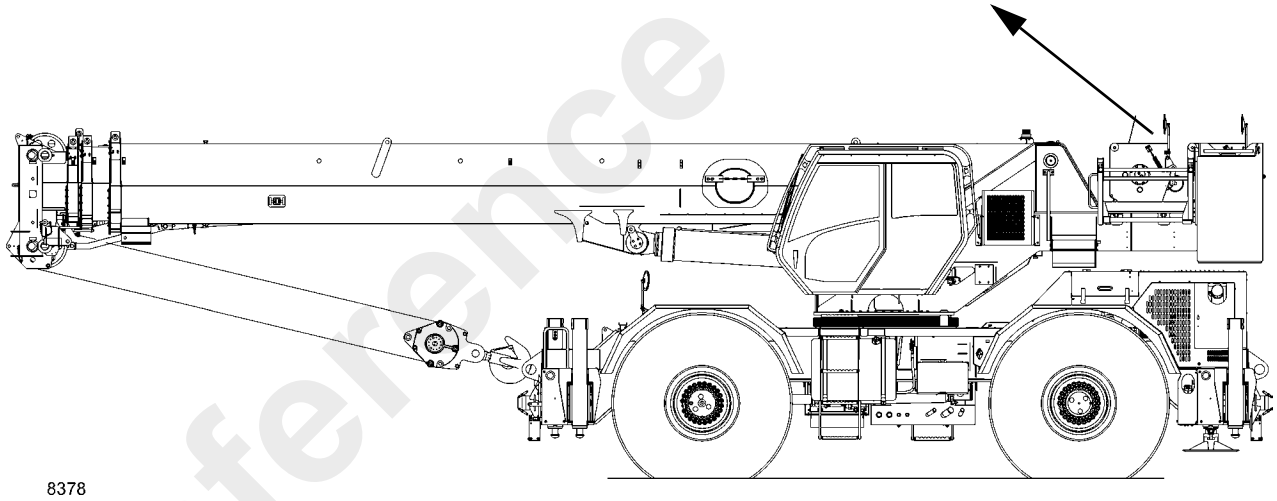

FIGURE 5-12

Reference Only

Item	Lube Point Description	Figure No.	Approved Lubricant	Lube Capacity	Lube Interval	Application
Hydraulic						
100	Hydraulic Tank	Figure 5-13	HYDO Hydraulic Oil 6829006444	640 L (169 gal)	Check fluid level every 10 hours or daily.	• Use sight gauge on side of tank, with boom down and all outrigger cylinders retracted. • Drain and refill as necessary

NOTE:

- Environmental and other conditions can dramatically affect the condition of hydraulic oil and filters. Therefore, specific intervals for servicing/changing hydraulic oil, filters and hydraulic tank breathers cannot be set. However, it is imperative for the continued satisfactory performance of Grove cranes that inspections be performed on the basis of how and where each crane is used. Air borne and ingested contaminants can significantly reduce the life of oil and the condition of hydraulic oil filters and tank breathers.
- Under normal operating conditions, it is recommended that hydraulic oil, filters and breathers be inspected and oils sampled at least every 3 to 6 months and more frequently for severe operating conditions. The inspections should be for air borne and/or ingested particles and water that deteriorate and contaminate the oil (e.g., oil appears “milky” or no longer has a transparent clear to amber color). The return filter by-pass indicator should be observed daily to determine if the contaminants content may be high. If the indicator reaches the red zone or indicates a by-pass condition, the hydraulic oil must be sampled. The hydraulic tank breather should also be inspected to assure that it is not restricting air flow into and out of the reservoir.
- To inspect hydraulic oil, fill a small glass container with a sample of reservoir oil and another glass container with fresh oil. Let the samples stand, undisturbed, for one to two hours and then compare the samples. If the reservoir oil is heavily contaminated with water the sample will appear “milky” with only a small layer of transparent oil on top. If the “milky” appearance was due to air foaming, it will dissipate and the oil should closely match the fresh oil. Should you have any questions, please contact your local authorized Manitowoc distributor.
- The hydraulic oil shall meet or exceed ISO 4406 class 17/14 cleanliness level.

101	Hydraulic Filter	Figure 5-13	HYDO Hydraulic Oil 6829006444	---	Change filter when the indicator is red	---
102	DEF Tank	Figure 5-14	DEF 80019225	5 gal (19 l)	Fill when level is low per indicator.	---

Reference Only

FIGURE 5-13

Reference Only

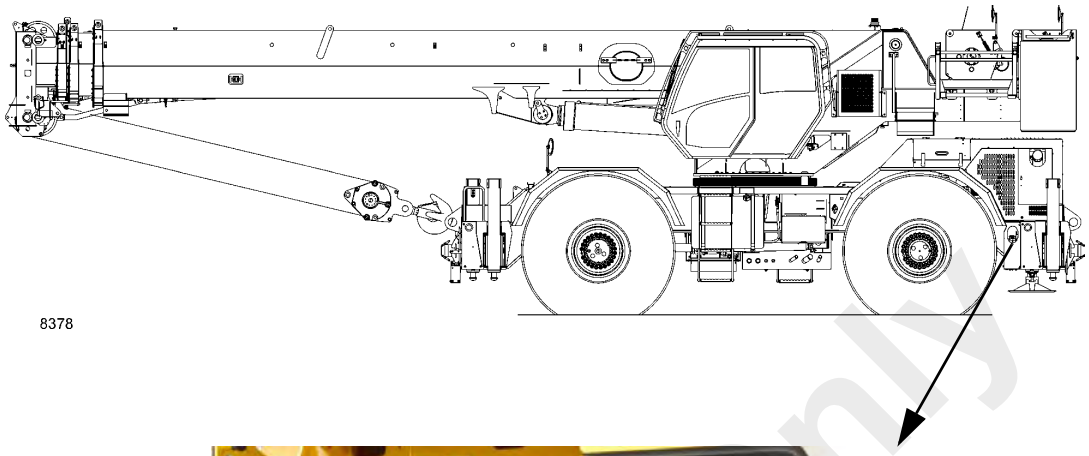

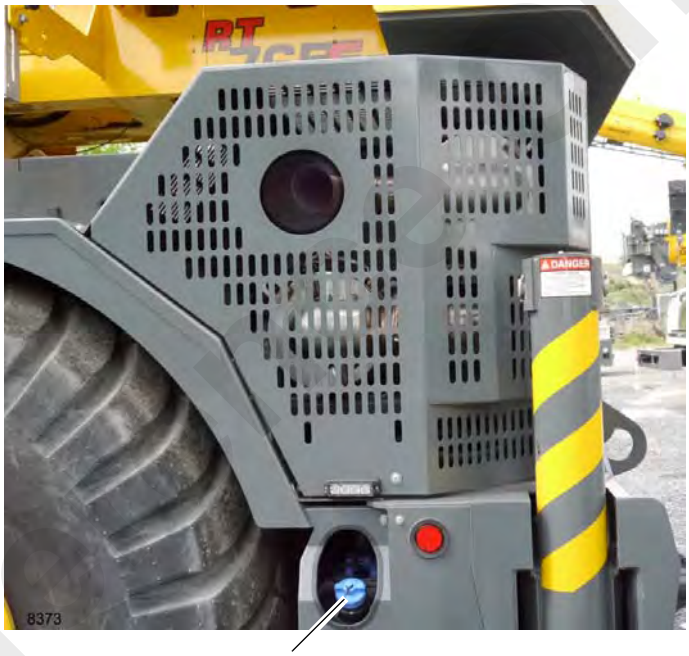

102

FIGURE 5-14

Reference Only

SECTION 6
MAINTENANCE CHECKLIST

SECTION CONTENTS

General **6-1**
Instructions **6-1**
Daily or 10 Hour Check List 6-1
Weekly or 50 Hour Check List 6-2

GENERAL

This section contains a list of daily inspection and maintenance checks. Performing the checks will help maintain the safety, dependability, and productivity designed into your crane.

Refer to your Inspection & Lubrication Service Log for further requirements.

INSTRUCTIONS

Refer to your Service Manual for specific maintenance and adjustment procedures.

Refer to Section 5 - Lubrication (in this Operator Manual) for lubrication intervals, types of fluids and lube point locations.

Daily or 10 Hour Check List

1 **Operator's Manual**: Is item properly installed on machine?
2 **Signal and Running Lights & Horn**: Check for cracked or broken glass. Check for proper working order.
3 **Back-up Alarm**: Check for proper operation while operating machine.
4 **Gauges and Instruments**: Check for proper working order. Check for proper reading while operating engine. Check for proper operation while operating machine.
5 **Brakes (Swing, Foot & Parking)**: Check for proper working order. Check for proper operation while operating machine.
6 **Boom Angle Indicator**: Check for proper operation while operating machine.
7 **Rated Capacity Limiter**: Check for proper operation while operating machine. Check connectors and wiring for proper alignment and insulation.
8 **Anti-two-block (A2B) Electrical and Hydraulic**: Check for proper operation while operating machine. Check connectors and wiring for proper alignment and insulation.
9 **Brakes and Air System (if equipped)**: Check for proper working order. Check for proper operation while operating machine. Drain moisture.
10 **Tires**: Check for proper inflation/pressure. Check for excessive wear. Check for excess dirt, grease or foreign matter.
11 **Hourmeter**: Check for proper working order. Check for proper reading while operating engine. Check connectors and wiring for proper alignment and insulation.
12 **Hydraulic Tank**: Check for proper service/level. Check for excess dirt, grease, or foreign matter.
13 **Hydraulic Oil Filter**: Check for proper service/level.
14 **Wire Rope**: Check for damaged, frayed, or broken strands.
15 **Hoists**: Is item properly installed on machine. Check for excess dirt, grease, or foreign matter. Check for proper operation while operating machine.
16 **Boom and Attachments**: Is item properly installed on machine. Check for excess dirt, grease, or foreign matter. Check for proper operation while operating machine.
17 **Crankcase**: Check for proper service/level. Check for excess dirt, grease, or foreign matter.

Reference Only

18 **Transmission/Torque Converter**: Check for proper service/level.

19 **Cooling System**: Check for proper service/level. Check for cracks or leaks.

20 **Fuel/Water Separator**: Drain moisture.

21 **Air Cleaner**: Check for proper service/level. Check for cracks or leaks.

22 **Oil Cooler**: Check for dirt buildup.

23 **Hook Block & Headache Ball Safety Latch**: Check for proper working order. Check for cracks and leaks. Check for excessive wear.

24 **Lock-out Cylinder & Slew Potentiometer:** Check for proper operation while operating machine. Check for proper adjustment.

Weekly or 50 Hour Check List

1 **Sheaves**: Check for proper operation, excessive wear, and damage.

Reference Only

ALPHABETICAL INDEX

Accessing the Hoist Area (Fixed counterweight units only) 4-1
Accidents 2-2
Cab Overhead Controls 3-5
Cable Reeving 4-2
Cold Weather Operation 2-37
Control Seat Assembly (Single Axis) 3-14
Controls and Indicators 3-2
Crane Stability/Structural Strength 2-6
Crane Warm-up Procedures 3-24
Dead-End Rigging/Wedge Sockets 4-3
Electrocution Hazard 2-23
Environmental Protection 2-26
Environmental Protection 5-1
Erecting and Stowing the Bi-fold Boom Extension with the 6.1 m (20 ft) Insert 4-18
Erecting and Stowing the Bi-fold Boom Extension 4-8
Fixed Counterweight 4-21
Foot Pedal Controls 3-19
Installing Cable on the Hoist 4-2
Instructions 6-1
Jib 2-37
List Of Specifications 1-5
Lubricants and Lubrication Intervals 5-1
Lubrication Points 5-7
Maintenance 2-27
Miscellaneous Controls and Indicators 3-20
Model Specific Information 2-40
Noise/vibration test results 1-1
Operating Procedures 3-21
Operational Aids 2-4
Operator Information 2-3
Operator Qualifications 2-3
Outrigger Control 3-18
Overhead Control Panel 3-6
Overload Inspection 2-40
Parking and Securing 2-37
Personnel Handling 2-25
Pile Driving and Extracting 2-22
Removable Counterweight (Optional) 4-23
Safety Messages 2-1
Serial Number Location 1-2
Shut-Down 2-37
Side Control Panel 3-17
Steering Column Indicator and Gauge Display 3-9
Steering Column 3-3
Surface Protection for Cylinder Rods 5-6
Temperature Effects on Hook Blocks 2-38
Temperature Effects on Hydraulic Cylinders 2-38
Transporting the Crane 2-31
Travel Operation 2-31
Wind Forces 2-7
Wire Rope Lubrication 5-6
Work Practices 2-32

Reference Only

THIS PAGE BLANK

Reference Only

Reference Only

Reference Only