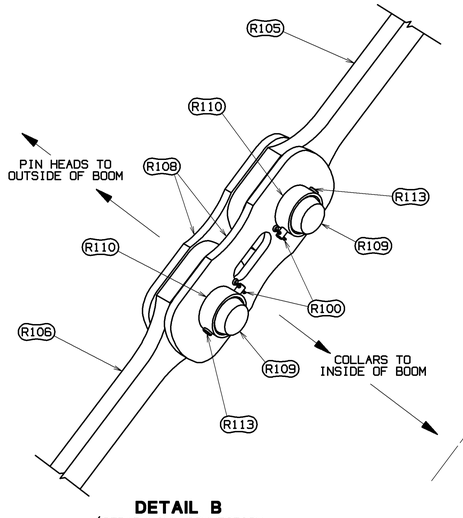

DETAIL B
(STRAP/LINK CONNECTION AT FAR SIDE OF BOOM)
SCALE 0.350

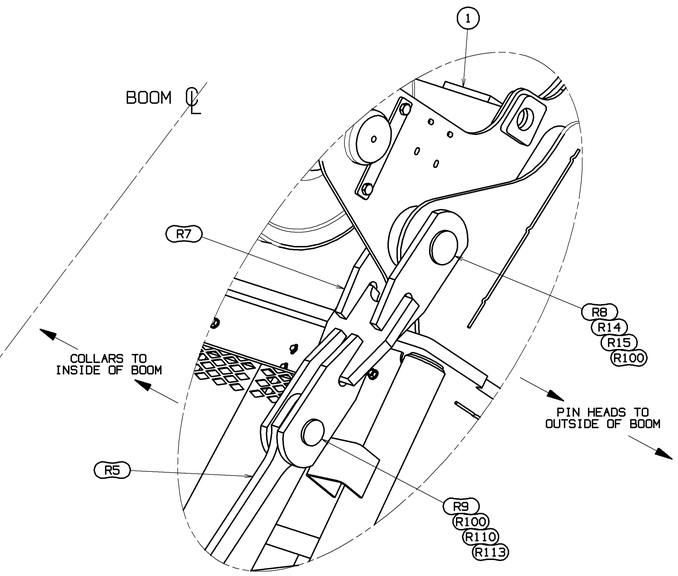

DETAIL A
SCALE 0.200

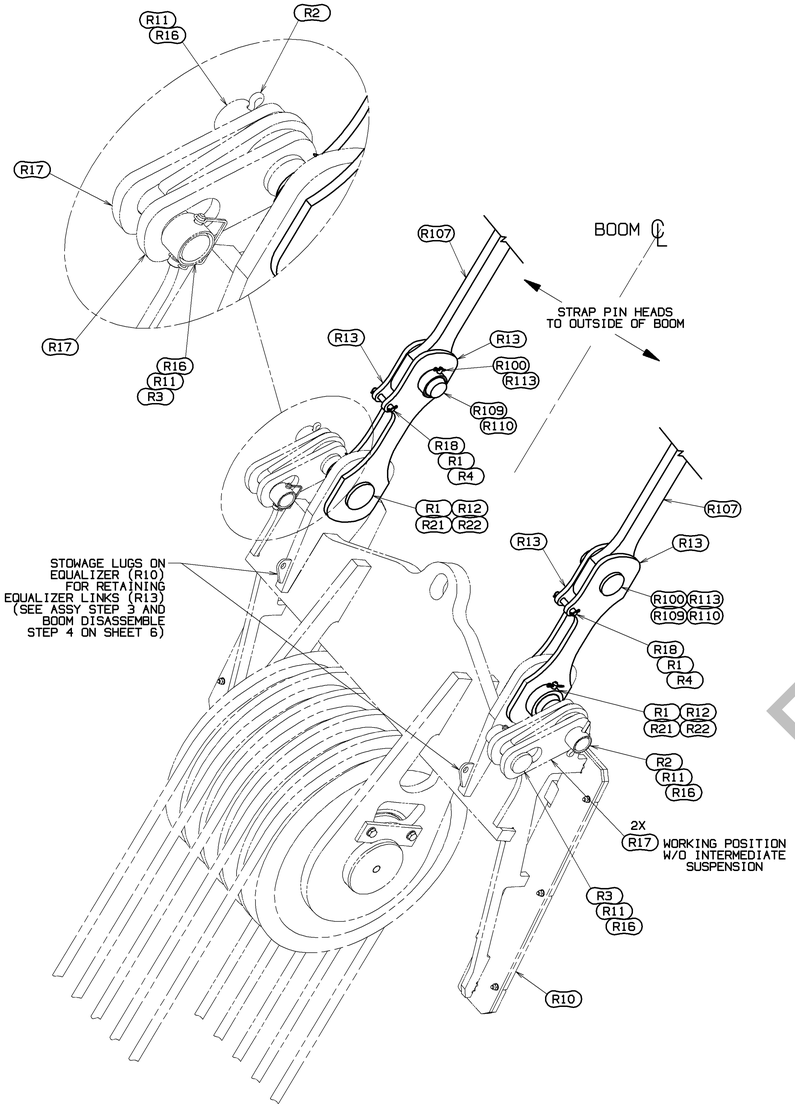

DETAIL C
SCALE 0.200

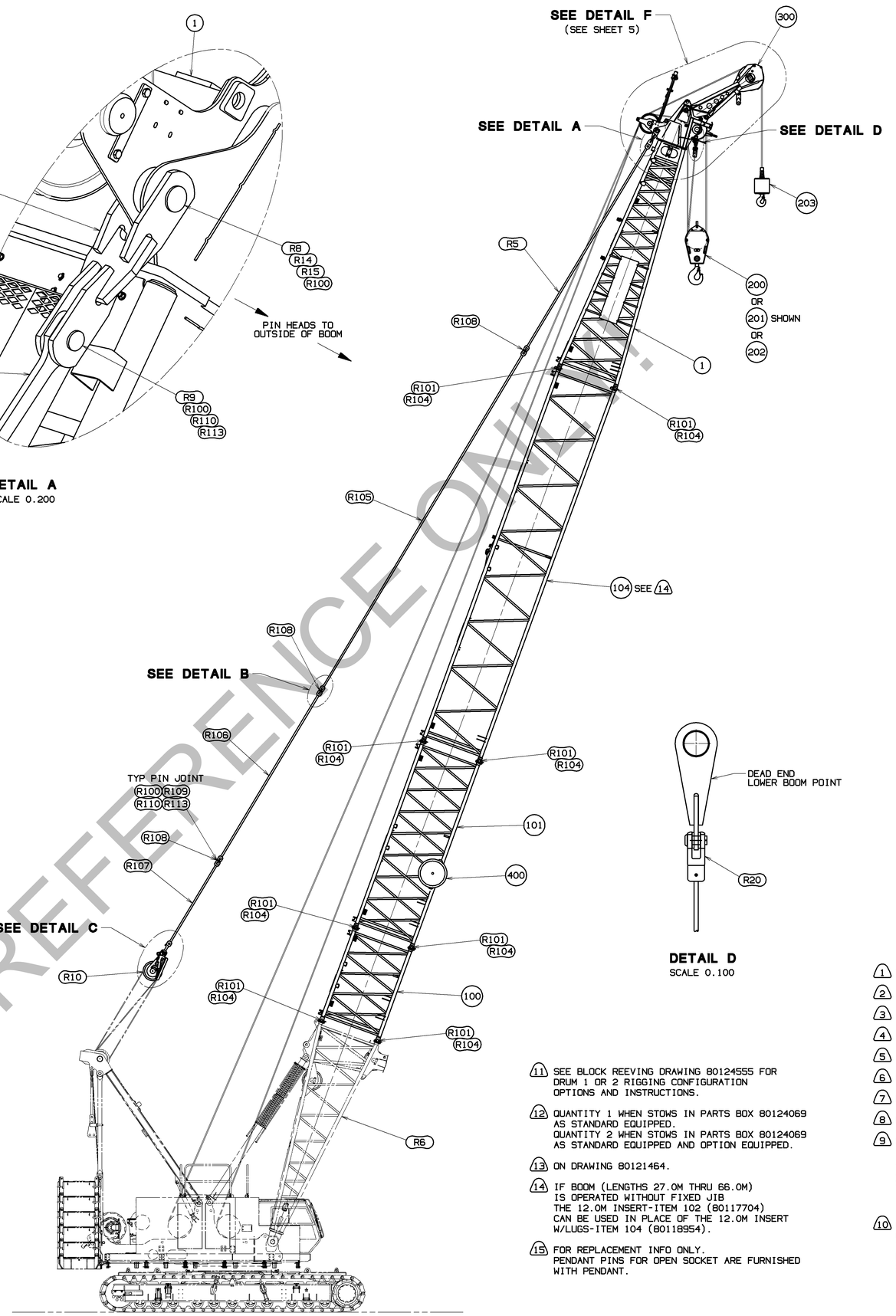

36.0 M (118.1 FT)
#350 BOOM SHOWN

DETAIL D
SCALE 0.100

REFERENCE ONLY

BILL OF MATERIAL

ITEM NO.	NO. REQ'D	DESCRIPTION	MATERIAL	CODE NO. OR DWG. NO	
		BOOM RIGGING B10:350			
1	1	TOP ASSY #350 8.20 M	80121512	1	
2					
3					
4					
		NO. REQ'D FOR THE FOLLOWING ITEMS ARE IN THE BOOM LENGTH TABLE (SHEET 2)			
100		INSERT ASSY #350 3M	80117700	2	
101		INSERT ASSY #350 6M	80117702	3	
102		INSERT ASSY #350 12M	80117704	4	
103					
104		INSERT ASSY #350 12M W/LUG	80118954	5	
105					
106		PENDANT 0.875 DIA 80FT-8.82 LG	80124150	10	
107					
		OPTION 1: HOOK BLOCKS			
200	1	BLOCK 135 MTON 5 SHEAVE	80120389		
201	1	BLOCK 85 MTON 3 SHEAVE	80120390		
202	1	BLOCK 30 MTON 1 SHEAVE	80120391		
203	1	OVERHAUL BALL 15 MTON	80120392		
204					
		OPTION 2: UPPER BOOM POINT			
300	1	UPPER POINT ASSEMBLY	80118578	6	
		OPTION 3: TAGLINE			
400	1	TAGLINE ASSY	80128614		
		BASIC REFERENCE ITEMS			
R1	6	PIN COTTER 3/16 DIA X 1.50 LG	562085		
R2	2	PIN COTTER 3/8 DIA X 3.00 LG	562150		
R3	2	PIN SAFETY .375x2.25 LG	563871		
R4	2	PIN HAIR COTTER .120 DIA X 2.38 LG	563790		
R5	2	STRAP 8.2M #350 TOP	80121468	13	
R6	1	BUTT ASSY #350 6.8M	80121510		
R7	2	LINK MACH #350	80122334		
R8	2	PIN W/HD 69.85 DIA X 147.8 LG	80122344		
R9	2	PIN W/HD 52.1 DIA X 87.8 LG	80122345		
R10	1	EQUALIZER ASSY	80123530		
R11	4	COLLAR 2.0 OD X .095W (IN)	80124514		
R12	2	PIN W/HD 64.0 DIA X 59.0 LG	80124517		
R13	4	LINK EQUALIZER	80130040		
R14	2	COLLAR 88.9 DIA X 25.0 LG	80124932		
R15	2	PIN CLEVIS 9.5 DIA X 95.3 LG	80124933		
R16	4	PIN 1 HOLE 41.28 OD X 84 LG	80125079		
R17	4	LINK TIE BACK	80125080		
R18	2	PIN 2 HOLE 0.500 DIA X 2.39 LG	140538		
R19					
R20	-	SOCKET BUTTON 22-26MM WIRE ROPE	A11041	12	
R21	2	PIN 2 HOLES 12.7 DIA X 93.0 LG	A11799		
R22	2	COLLAR 66mm I.D.	A11800		
R23					
		NO. REQ'D FOR THE FOLLOWING REFERENCE ITEMS ARE IN THE BOOM LENGTH TABLE			
R100		PIN COTTER 1/8 DIA X 1.00 LG	562043		
R101		PIN SAFETY .243 OD X 5.00	563640		
R102		PIN 1 HOLE W/HD 1.625 DIA X 3.69 LG	564095	15	
R103					
R104		PIN 2 HOLE 70.0 DIA X 126.0 LG	80118039		
R105		STRAP 12.0M #350	80121465	13	
R106		STRAP 6.0M #350	80121466	13	
R107		STRAP 3.0M #350	80121467	13	
R108		LINK #350	80121469		
R109		PIN W/HD 52.1 DIA X 64.25 LG	80121470		
R110		COLLAR 63.5 DIA X 25.0 LG	80121471		
R111					
R112					
R113		PIN 9.5 DIA X 76.2 LG SST	81037242		
R114					

ASSEMBLIES USED ON: 80117472

REVISIONS

DWG. NO. 80117858
SHT 1 OF 7

1. TOP 8.20M I.D. TAG #80121513.
2. INSERT 3.0M I.D. TAG #80117701.
3. INSERT 6.0M I.D. TAG #80117703.
4. INSERT 12.0M I.D. TAG #80117705.
5. INSERT 12.0M W/BACKSTAY LUG I.D. TAG #80118955.
6. UPPER POINT ASSY I.D. TAG #174208.
7. MAXIMUM NUMBER OF 3 METER INSERTS = 1.
8. MAXIMUM NUMBER OF 6 METER INSERTS = 2.
9. STARTING WITH BOOM BUTT ASSEMBLY (R6), INSERT ASSEMBLIES MUST BE INSTALLED IN ASCENDING LENGTH, WITH THE EXCEPTION OF THE 3.0M & 6.0M INSERT AFTER THE INTERMEDIATE SUSPENSION ON THE 72.0M (236.2 FT), 75.0M (246.1 FT) & 78.0M (255.9 FT) LONG BOOMS. (SEE BOOM MAKEUP SHEET 5).
10. ON DRAWING A13301. 69.0M (226.4 FT), 72.0M (236.2 FT), 75.0M (246.1 FT) AND 78.0M (255.9 FT) BOOM REQUIRES INTERMEDIATE SUSPENSION PENDANT ITEM 106. SEE SHEET 7 FOR OPERATIONAL INSTRUCTIONS.
11. SEE BLOCK REEVING DRAWING 80124555 FOR DRUM 1 OR 2 RIGGING CONFIGURATION OPTIONS AND INSTRUCTIONS.
12. QUANTITY 1 WHEN STOWS IN PARTS BOX 80124069 AS STANDARD EQUIPPED. QUANTITY 2 WHEN STOWS IN PARTS BOX 80124069 AS STANDARD EQUIPPED AND OPTION EQUIPPED.
13. ON DRAWING 80121464.
14. IF BOOM (LENGTHS 27.0M THRU 66.0M) IS OPERATED WITHOUT FIXED JIB THE 12.0M INSERT-ITEM 102 (80117704) CAN BE USED IN PLACE OF THE 12.0M INSERT W/LUGS-ITEM 104 (80118954).
15. FOR REPLACEMENT INFO ONLY. PENDANT PINS FOR OPEN SOCKET ARE FURNISHED WITH PENDANT.

PRIVATE LABELING REQUIREMENT TO CONFORM TO ENGINEERING SPECIFICATION 6829103794 FOR COMPONENTS LISTED IN 6D5500-05-035

THIS PRINT REMAINS THE PROPERTY OF MANITOWOC CRANES, INC. ALL INFORMATION CONTAINED THEREIN IS CONFIDENTIAL. IT IS LOANED, SUBJECT TO RETURN UPON DEMAND, AND ON EXPRESS CONDITION THAT IT IS NOT TO BE COPIED OR USED DIRECTLY OR INDIRECTLY IN ANY WAY WHATSOEVER DETRIMENTAL TO OUR INTERESTS.

TOLERANCE UNLESS OTHERWISE SPECIFIED				
DECIMAL PLACES	FABRICATION ≤ 10 FEET	FABRICATION > 10 FEET	MACHINING	MACHINING TOLERANCE TO BE ±.005 IN ADDITION TO ABOVE
(1) PLACE 0.0	±.12	±.19	±.03	
(2) PLACE 0.00	±.06	±.12	±.015	
(3) PLACE 0.000			±.005	
ANGLES	±1°30'		±0°30'	

SCALE .020

Manitowoc Cranes, Inc.
Manitowoc, Wisconsin

DR. RHV
CK. DLG
MODEL MLC150-1
APP JRR

BOOM RIGGING
B10:350

DATE 01-05-21
REV. LTR. A
DWG. NO. 80117858
SHT 1 OF 7

DO NOT SCALE THIS DRAWING

ITEMS REQ'D FOR VARIOUS BOOM LENGTHS - SEE SHEETS 3, 4 & 5 FOR BOOM MAKE-UP

ITEM NO.		#350 INSERTS				CONNECTOR PINS		STRAPS			LINKS	LINK/STRAP CONNECTION				SUSPENSION	
		100	101	102	102/104 (14)	R101	R104	R107	R106	R105	R108	R100	R109	R110	R113	106	R102
BOOM LENGTH METERS	BOOM LENGTH FEET	INSERT 3M (9.8FT) ASSY	INSERT 6M (19.7FT) ASSY	INSERT 12M (39.4FT) ASSY	INSERT 12M (39.4FT) W/LUG ASSY	SAFETY PIN	PIN TAPERED 2 HOLES	STRAP 3M (9.8FT)	STRAP 6M (19.7FT)	STRAP 12M (39.4FT)	LINK 170mm (6.7in)	COTTER	PIN W/HEAD	COLLAR	PIN CLEVIS	PENDANT 24.61M (80.75FT)	(15) PENDANT PIN
15	49.2	0	0	0	0	8	4	0	0	0	0	6	2	4	4	0	0
18	59.1	1	0	0	0	16	8	2	0	0	4	10	6	8	8	0	0
21	68.9	0	1	0	0	16	8	0	2	0	4	10	6	8	8	0	0
24	78.7	1	1	0	0	24	12	2	2	0	8	14	10	12	12	0	0
27	88.6	0	0	0	1	16	8	0	0	2	4	10	6	8	8	0	0
		OR 0	2	0	0	24	12	0	4	0	8	14	10	12	12		
30	98.4	1	0	0	1	24	12	2	0	2	8	14	10	12	12	0	0
		OR 1	2	0	0	32	16	2	4	0	12	18	14	16	16		
33	108.3	0	1	0	1	24	12	0	2	2	8	14	10	12	12	0	0
36	118.1	1	1	0	1	32	16	2	2	2	12	18	14	16	16	0	0
39	128.0	0	0	1	1	24	12	0	0	4	8	14	10	12	12	0	0
		OR 0	2	0	1	32	16	0	4	2	12	18	14	16	16		
42	137.8	1	0	1	1	32	16	2	0	4	12	18	14	16	16	0	0
		OR 1	2	0	1	40	20	2	4	2	16	22	18	20	20		
45	147.6	0	1	1	1	32	16	0	2	4	12	18	14	16	16	0	0
48	157.5	1	1	1	1	40	20	2	2	4	16	22	18	20	20	0	0
51	167.3	0	0	2	1	32	16	0	0	6	12	18	14	16	16	0	0
		OR 0	2	1	1	40	20	0	4	4	16	22	18	20	20		
54	177.2	1	0	2	1	40	20	2	0	6	16	22	18	20	20	0	0
		OR 1	2	1	1	48	24	2	4	4	20	26	22	24	24		
57	187.0	0	1	2	1	40	20	0	2	6	16	22	18	20	20	0	0
60	196.9	1	1	2	1	48	24	2	2	6	20	26	22	24	24	0	0
63	206.7	0	0	3	1	40	20	0	0	8	16	22	18	20	20	0	0
		OR 0	2	2	1	48	24	0	4	6	20	26	22	24	24		
66	216.5	1	0	3	1	48	24	2	0	8	20	26	22	24	24	0	0
		OR 1	2	2	1	56	28	2	4	6	24	30	26	28	28		
69	226.4	0	1	3	1	48	24	0	2	8	20	26	22	24	24	2	2
72	236.2	1	1	3	1	56	28	2	2	8	24	30	26	28	28	2	2
75	246.1	0	2	3	1	56	28	0	4	8	24	30	26	28	28	2	2
78	255.9	1	2	3	1	64	32	2	4	8	28	34	30	32	32	2	2

BOOM HANDLING WITH EQUALIZER

WITH EQUALIZER ATTACHED TO BOOM BUTT
MAXIMUM BOOM INSERTS THAT CAN BE CANTILEVERED
BEYOND 6.8M BOOM BUTT IS AS FOLLOWS

LENGTH	3M (9.8FT) INSERT 80117700	6M (19.7FT) INSERT 80117702	12M (39.4FT) INSERT 80117704 OR 80118954
3M (9.8FT)	1	0	0
6M (19.7FT)	0	1	0
9M (29.5FT)	1	1	0
12M (39.4FT)	0	0	1
	0	2	0
15M (49.2FT)	1	0	1
	1	2	0
18M (59.1FT)	0	1	1
21M (68.9FT)	1	1	1
24M (78.7FT)	0	0	2
	0	2	1

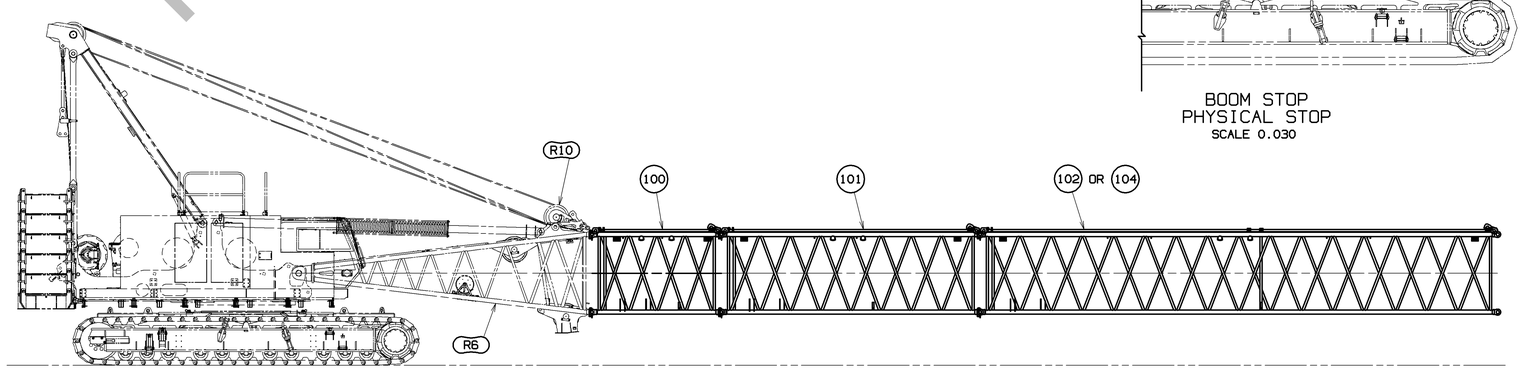

BOOM HANDLING WITH EQUALIZER PINNED TO BUTT
SCALE 0.020
(SEE STEP 2 AND DETAIL G ON SHEET 6 FOR BUTT TO INSERT ATTACHMENT)

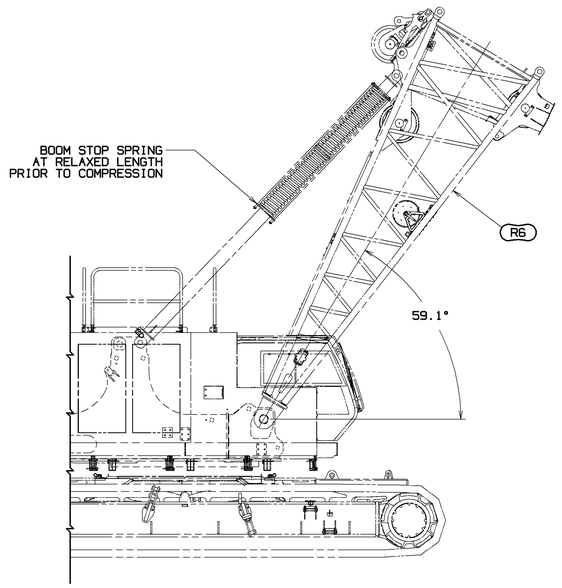

BOOM STOP
START OF CUSHION
SCALE 0.030

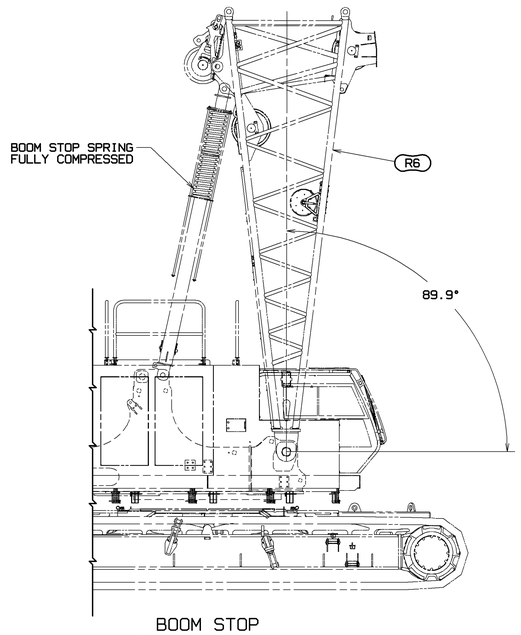

BOOM STOP
PHYSICAL STOP
SCALE 0.030

REFERENCE ONLY!

BILL OF MATERIAL

ITEM NO.	NO. REQ'D	PRC-TCH	DESCRIPTION	LENGTH IN	MATERIAL	DWG. NO. OR STND. NO.

ASSEMBLIES USED ON

REVISIONS

THIS PRINT REMAINS THE PROPERTY OF MANITOWOC CRANES, INC. ALL INFORMATION CONTAINED THEREIN IS CONFIDENTIAL. IT IS LOANED, SUBJECT TO RETURN UPON DEMAND, AND ON EXPRESS CONDITION THAT IT IS NOT TO BE COPIED OR USED DIRECTLY OR INDIRECTLY IN ANY WAY WHATSOEVER DETRIMENTAL TO OUR INTERESTS.

TOLERANCE UNLESS OTHERWISE SPECIFIED			
DECIMAL PLACES	FABRICATION ≤ 10 FEET	FABRICATION > 10 FEET	MACHINING
(1) PLACE 0.0	±.12	±.18	±.03
(2) PLACE 0.00	±.06	±.12	±.015
(3) PLACE 0.000			±.005
ANGLES	±1°30'		±0°30'

FOR MACHINING TOLERANCE REFER TO WISE STANDARD DIMENSIONS AND TOL. MANUAL

SCALE NOTED
DR. RHV
CK. DLG
APP JRR

Manitowoc Cranes, Inc.
Manitowoc, Wisconsin

MODEL MLC150-1

BOOM RIGGING
B10:350

DWG. NO. 80117858
SHT 2 OF 7

PRIVATE LABELING REQUIREMENT TO CONFORM TO ENGINEERING SPECIFICATION 6829103794 FOR COMPONENTS LISTED IN GDS500-05-035

DATE 01-05-21
REV. LTR. A

DWG. NO. 80117858

DO NOT SCALE THIS DRAWING

BILL OF MATERIAL						
ITEM NO. / NO. REQD.	REQ. ITEM	DESCRIPTION	LENGTH IN.	MATERIAL	DWG. NO. OR STAND. NO.	

ASSEMBLIES USED ON

REVISIONS

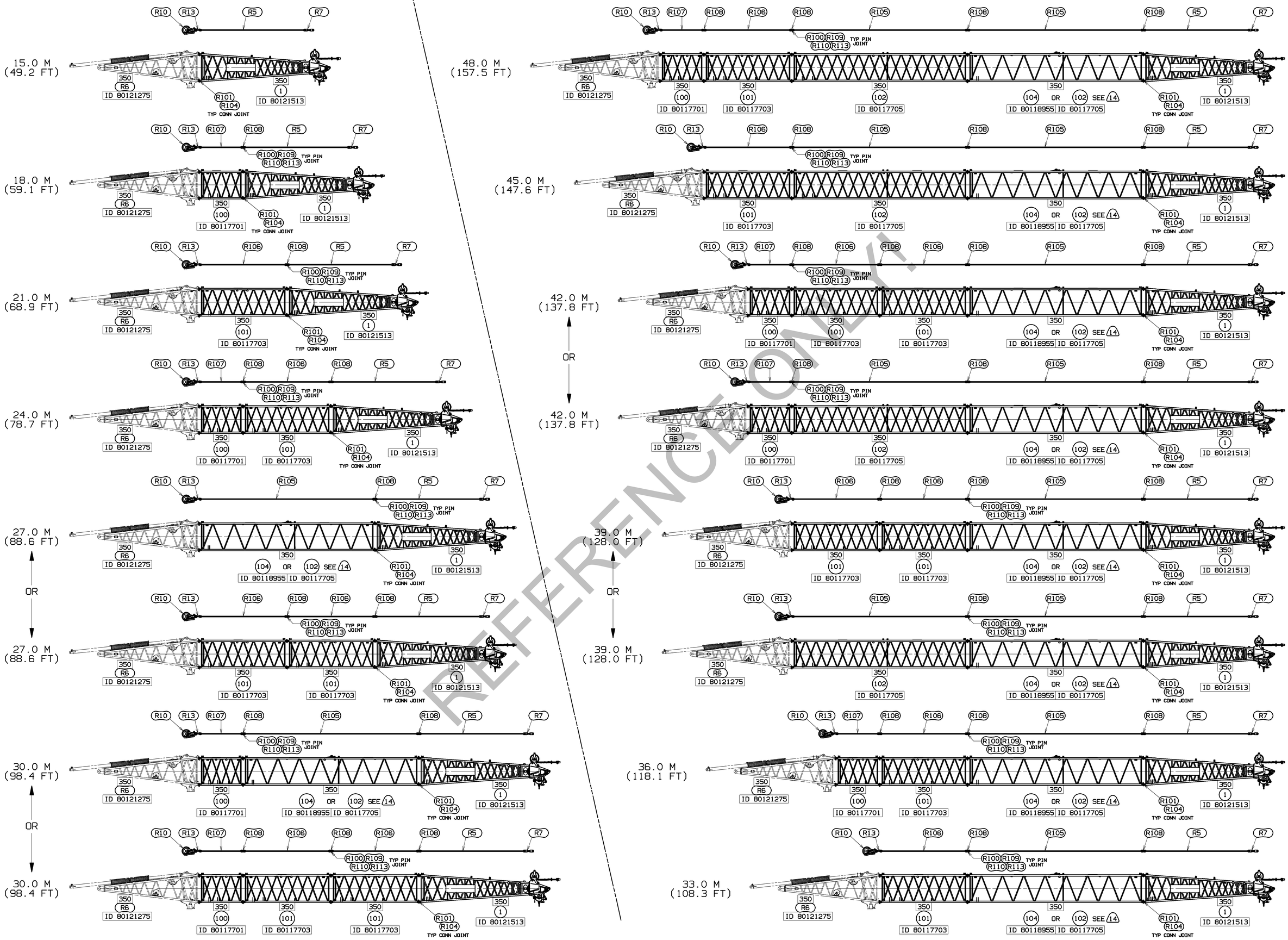

RECOMMENDED BOOM MAKEUP

FOR TYP PIN JOINT SEE DETAILS A, B, AND C (SEE SHEET 1)
FOR TYP CONN JOINT SEE DETAIL G (SEE SHEET 6)

REFERENCE ONLY!

THIS PRINT REMAINS THE PROPERTY OF MANITOWOC CRANES, INC. ALL INFORMATION CONTAINED THEREIN IS CONFIDENTIAL, IT IS LOANED, SUBJECT TO RETURN UPON DEMAND, AND ON EXPRESS CONDITION THAT IT IS NOT TO BE COPIED OR USED DIRECTLY OR INDIRECTLY IN ANY WAY WHATSOEVER DETRIMENTAL TO OUR INTERESTS.

TOLERANCE UNLESS OTHERWISE SPECIFIED			
DECIMAL PLACES	FABRICATION ≤ 10 FEET	FABRICATION > 10 FEET	MACHINING
(1) PLACE 0.0	±.12	±.18	±.03
(2) PLACE 0.00	±.06	±.12	±.015
(3) PLACE 0.000			±.005
ANGLES	±1°30'		±0°30'

MACHINING TOLERANCE TO BE DISPLAYED ON THE SURFACE

SCALE .0125	Manitowoc Cranes, Inc.	
DR. RHV	Manitowoc, Wisconsin	BOOM RIGGING
CK. DLG	MODEL MLC150-1	B10:350
APP. JRR		

DWG. NO. 80117858
SHT 3 OF 7

PRIVATE LABELING REQUIREMENT TO CONFORM TO ENGINEERING SPECIFICATION 8829103794 FOR COMPONENTS LISTED IN GS5500-05-035

DATE 01-05-21

REV. LTR. A

DWG. NO. 80117858

DO NOT SCALE THIS DRAWING

BILL OF MATERIAL						
ITEM NO.	NO. REQD.	REC-TION	DESCRIPTION	LENGTH IN.	MATERIAL	CODE NO. OR DWG. NO.

ASSEMBLIES USED ON

REVISIONS

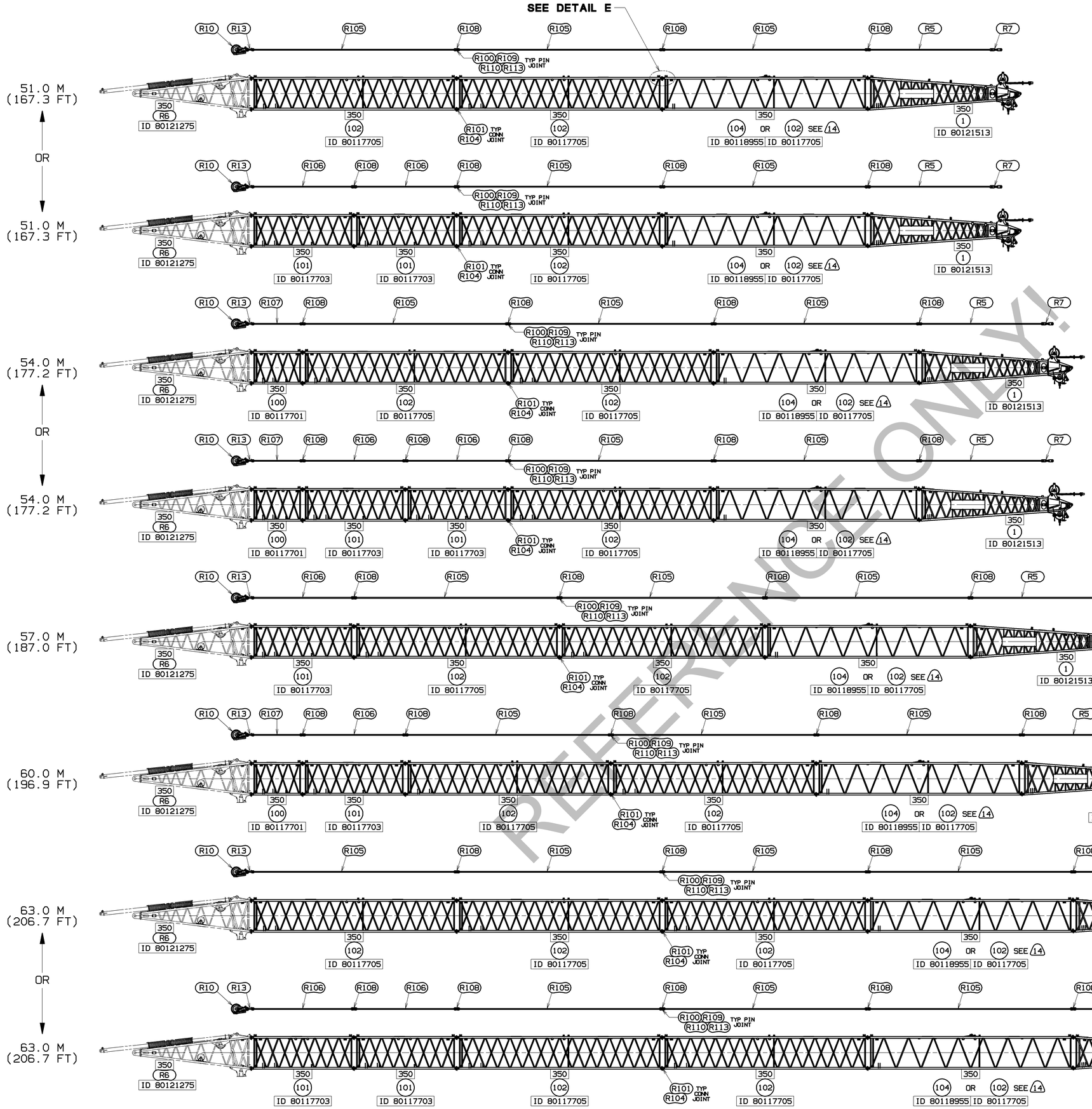

RECOMMENDED BOOM MAKEUP
FOR TYP PIN JOINT SEE DETAILS A, B, AND C (SEE SHEET 1)
FOR TYP CONN JOINT SEE DETAIL G (SEE SHEET 6)

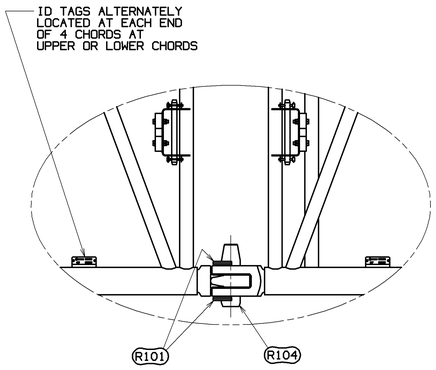

TYPICAL LOCATION OF INSERT IDENTIFICATON TAGS

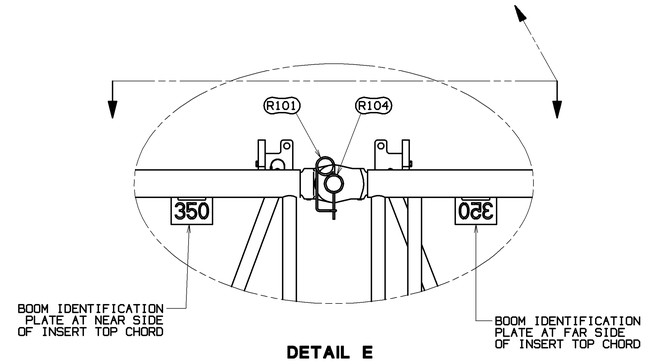

DETAIL E

TYPICAL LOCATION OF BOOM IDENTIFICATION PLATE

SCALE 0.125

REFERENCE ONLY!

THIS PRINT REMAINS THE PROPERTY OF MANITOWOC CRANES, INC. ALL INFORMATION CONTAINED THEREIN IS CONFIDENTIAL. IT IS LOANED, SUBJECT TO RETURN UPON DEMAND, AND ON EXPRESS CONDITION THAT IT IS NOT TO BE COPIED OR USED DIRECTLY OR INDIRECTLY IN ANY WAY WHATSOEVER DETRIMENTAL TO OUR INTERESTS.	TOLERANCE UNLESS OTHERWISE SPECIFIED				SCALE 0.125	Manitowoc Cranes, Inc. Manitowoc, Wisconsin	BOOM RIGGING
	DECIMAL PLACES	FABRICATION ≤ 10 FEET	FABRICATION > 10 FEET	MACHINING	DR. RHV		
	(1) PLACE 0.0	±.12	±.18	±.03	CK. DLG	MODEL MLC150-1	B10:350
	(2) PLACE 0.00	±.06	±.12	±.015	APP JRR		
	(3) PLACE 0.000			±.005			
	ANGLES	±1°30'		±0°30'			

MACHINING TOLERANCE APPLIES TO WELD DISTORTION PRIOR TO MACHINING

DWG. NO. 80117858
SHT 4 OF 7

PRIVATE LABELING REQUIREMENT TO CONFORM TO ENGINEERING SPECIFICATION 6829103794 FOR COMPONENTS LISTED IN 605500-05-035

DATE 01-05-21
REV. LTR. A
DWG. NO. 80117858

DO NOT SCALE THIS DRAWING

SHT 4 OF 7

BILL OF MATERIAL						
ITEM NO. / NO. REQD.	REQ'D. ITEM	DESCRIPTION	LENGTH IN	MATERIAL	DWG. NO. OR STAND. NO.	

ASSEMBLIES USED ON

REVISIONS

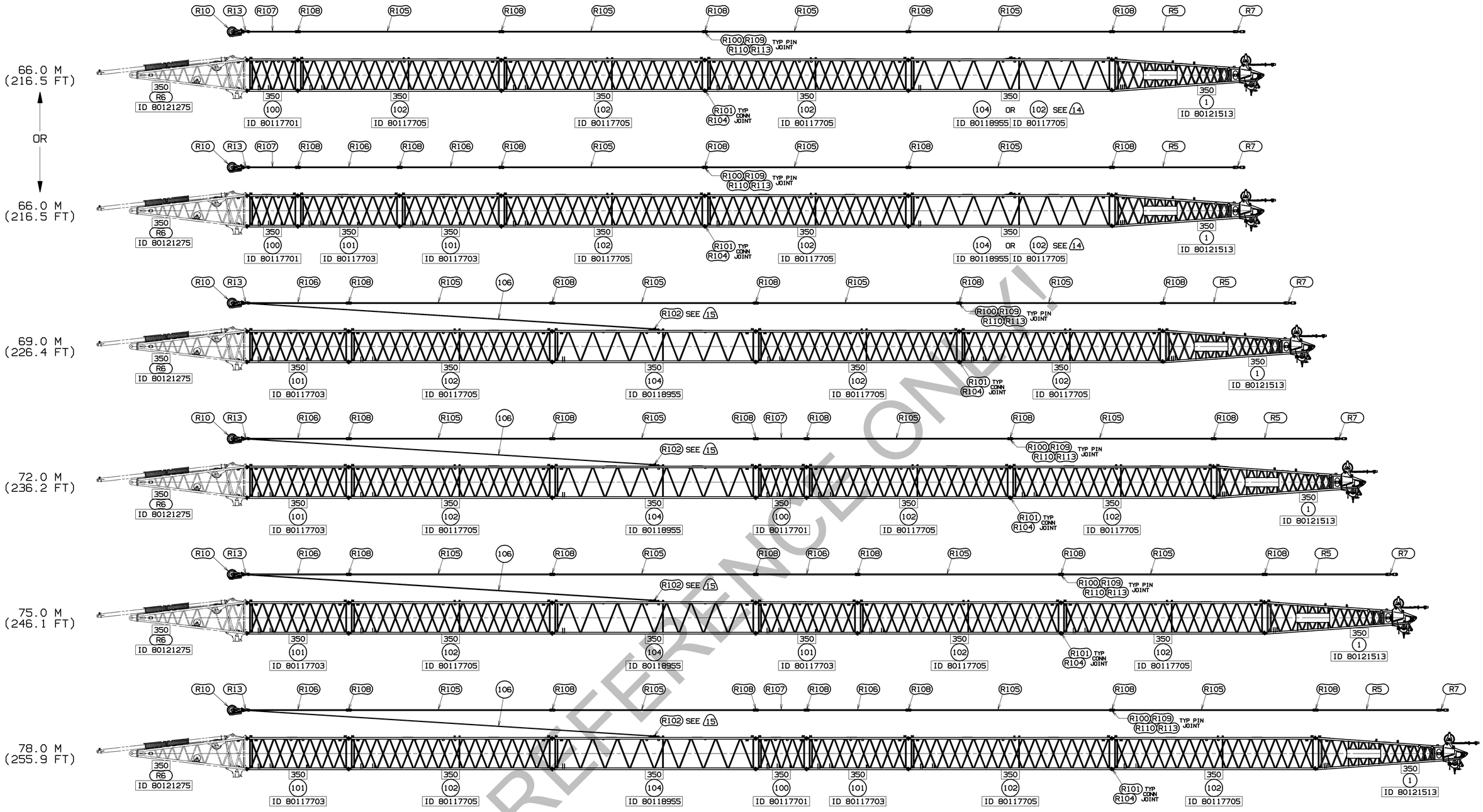

RECOMMENDED BOOM MAKEUP

FOR TYP PIN JOINT SEE DETAILS A, B, AND C (SEE SHEET 1)
FOR TYP CONN JOINT SEE DETAIL G (SEE SHEET 6)

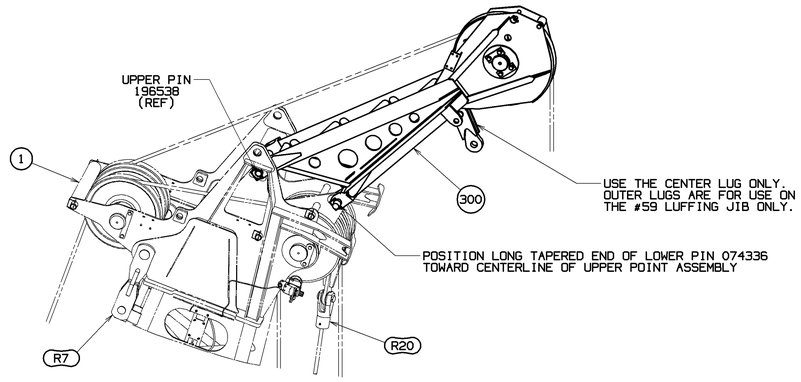

DETAIL F
(FROM SHEET 1)
SCALE 0.060

REFERENCE ONLY!

THIS PRINT REMAINS THE PROPERTY OF MANITOWOC CRANES, INC. ALL INFORMATION CONTAINED THEREON IS CONFIDENTIAL. IT IS LOANED, SUBJECT TO RETURN UPON DEMAND, AND ON EXPRESS CONDITION THAT IT IS NOT TO BE COPIED OR USED DIRECTLY OR INDIRECTLY IN ANY WAY WHATSOEVER DETRIMENTAL TO OUR INTERESTS.

TOLERANCE UNLESS OTHERWISE SPECIFIED			
DECIMAL PLACES	FABRICATION ≤ 10 FEET	FABRICATION > 10 FEET	MACHINING
(1) PLACE 0.0	±.12	±.18	±.03
(2) PLACE 0.00	±.06	±.12	±.015
(3) PLACE 0.000			±.005
ANGLES	±1°30'		±0°30'

MACHINING TOLERANCE APPLIES TO WELD DISTORTION AND/OR SHRINKAGE

DWG. TOL. .0125	Manitowoc Cranes, Inc. Manitowoc, Wisconsin		
DR. RHV		BOOM RIGGING	
CK. DLG	MODEL MLC150-1	B10:350	
APP JRR			

DWG. NO. 80117858
SHT 5 OF 7

PRIVATE LABELING REQUIREMENT TO CONFORM TO ENGINEERING SPECIFICATION 6822103794 FOR COMPONENTS LISTED IN GDS500-05-035

DATE 01-05-21

REV. LTR. A

DWG. NO. 80117858

SHT 5 OF 7

DO NOT SCALE THIS DRAWING

TO ASSEMBLE BOOM

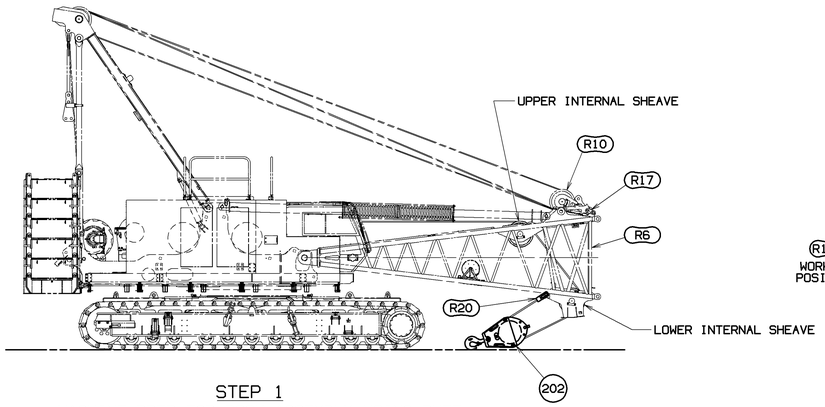

STEP 1
MACHINE PREP FOR BOOM ASSEMBLY USING BUTT

EQUALIZER (R10) TO BE PINNED TO BOOM BUTT (R6) WITH LINKS (R17). (SEE DETAIL J).

REEVE 2 PARTS LINE FROM FRONT DRUM OVER UPPER AND LOWER INTERNAL BUTT WIRE ROPE SHEAVES AND CONNECT TO BLOCK (ITEM 202) WITH BUTTON SOCKET (R20).

ASSEMBLE BOOM COMPLETE, WITHOUT BUTT.
DOUBLE TAPERED PIN (R104) AND SAFETY PIN (R101) TO BE INSTALLED AT CONNECTORS. (SEE DETAIL G).

REMOVE BLOCK (ITEM 202) PRIOR TO ASSEMBLY OF BOOM TO BUTT (STEP 2).

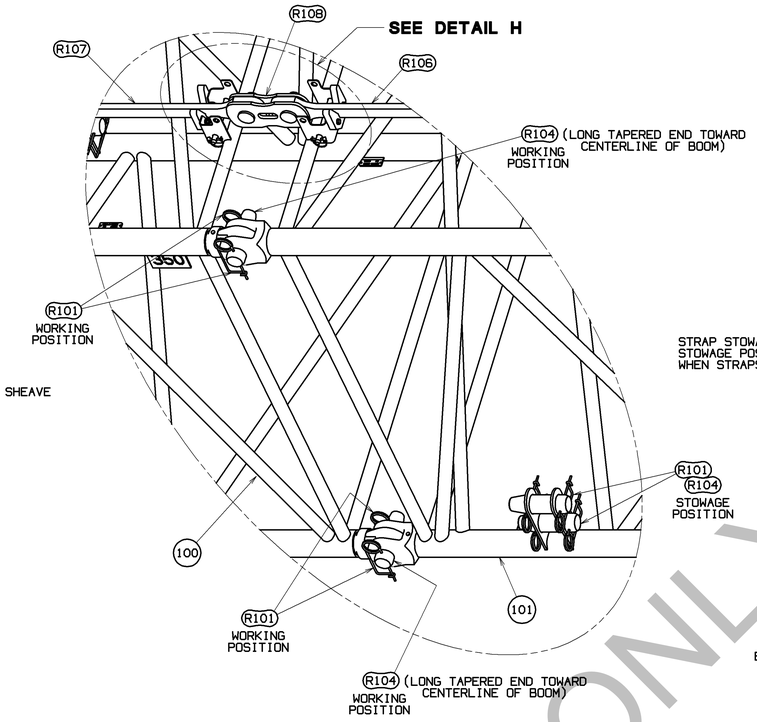

DETAIL G
TYPICAL PIN CONNECTORS
SCALE 0.125

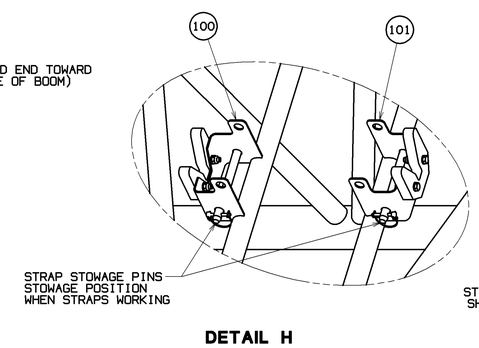

DETAIL H
WITHOUT STRAPS/LINKS-PIN/COLLAR/PIN
SCALE 0.200

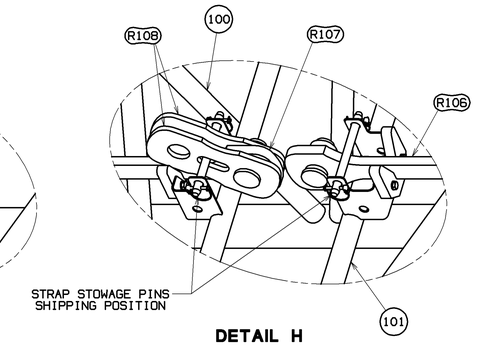

DETAIL H
WITH STRAPS/LINKS-PIN/COLLAR/PIN
SCALE 0.200

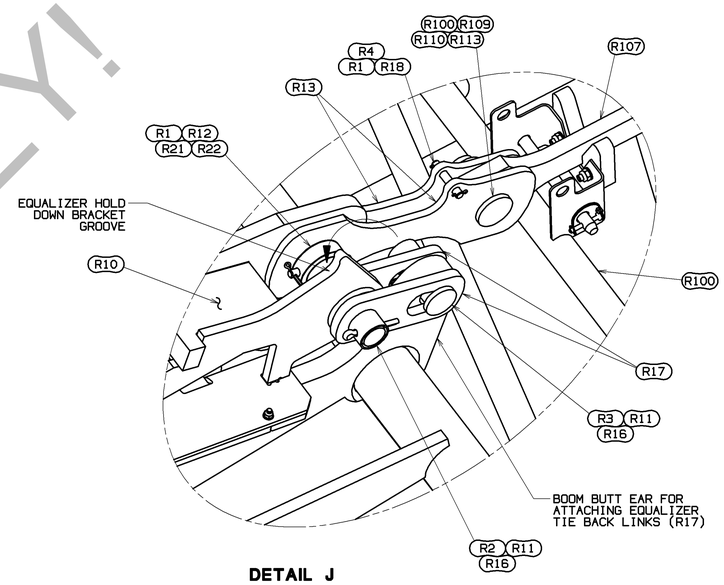

DETAIL J
SCALE 0.300

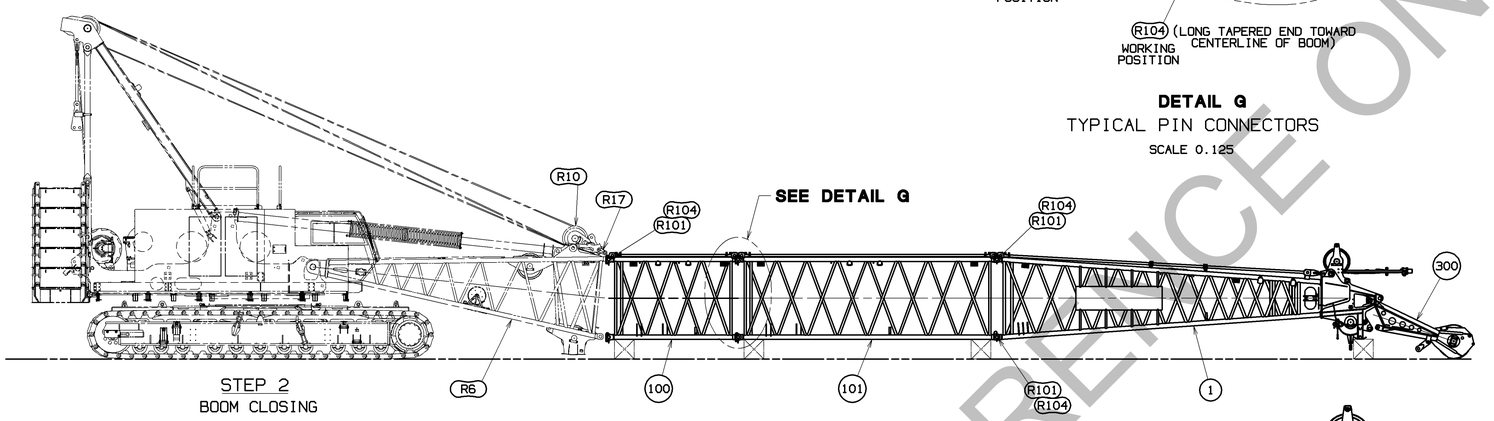

STEP 2
BOOM CLOSING

WITH EQUALIZER (R10) STILL PINNED TO BOOM BUTT (R6) AND THE BOOM INSERTS/TOP ASSEMBLY SUPPORTED ON BLOCKING, POSITION MACHINE TO ALIGN UPPER PIN CONNECTOR ON BOOM BUTT WITH UPPER PIN CONNECTOR PINS ON FIRST BOOM INSERT AND ENGAGE PINS. (SEE DETAIL G)

SLOWLY BOOM UP TO ALIGN LOWER PIN CONNECTOR ON BOOM BUTT WITH LOWER PIN CONNECTOR HOLES IN FIRST BOOM INSERT AND INSERT DOUBLE TAPERED PINS (R104) AND SAFETY PINS (R101). (SEE DETAIL G).
THIS BOOM CLOSING PROCEDURE CAN BE PERFORMED FOR ALL BOOM LENGTHS [15M (49.2FT) - 78M (255.9FT)].

NOTE:
SEE TABLE ON SHEET 2 FOR MAXIMUM BOOM INSERTS THAT CAN BE CANTILEVERED WITH EQUALIZER (R10) PINNED TO BUTT (R6).

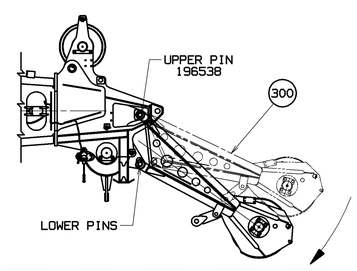

DETAIL K
UPPER BOOM POINT ASSEMBLY
WITH UPPER PIN INSTALLED, RAISE BOOM TO ALLOW UPPER BOOM POINT (ITEM 300) TO ROTATE INTO POSITION TO ALLOW LOWER PINS TO BE INSTALLED. (SEE DETAIL F ON SHEET 5).
SCALE 0.035

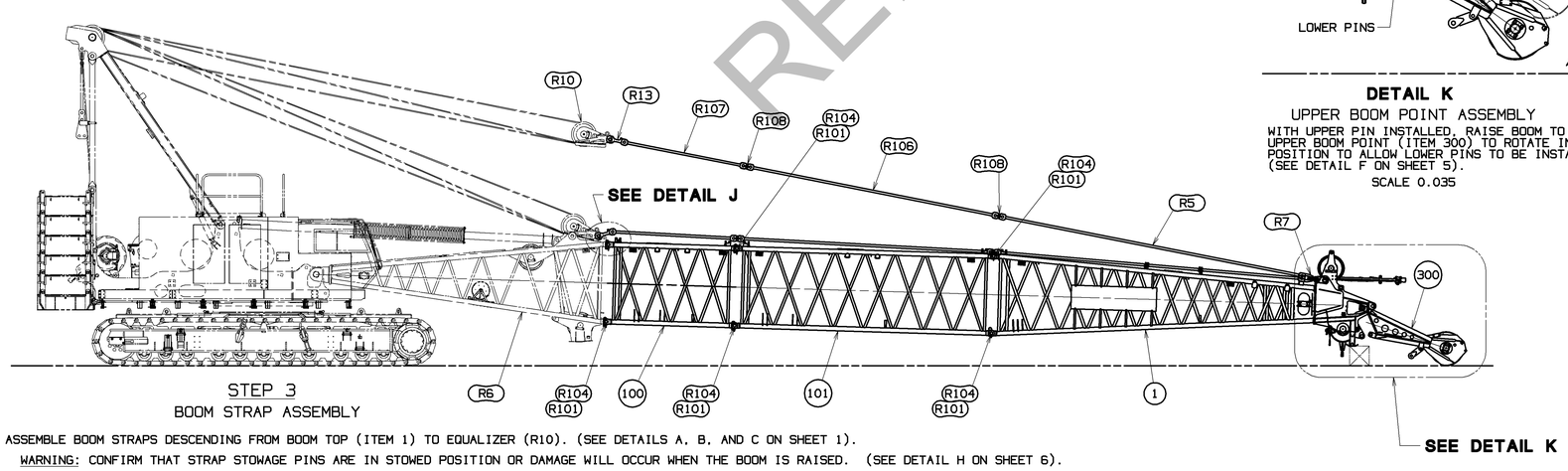

STEP 3
BOOM STRAP ASSEMBLY

ASSEMBLE BOOM STRAPS DESCENDING FROM BOOM TOP (ITEM 1) TO EQUALIZER (R10). (SEE DETAILS A, B, AND C ON SHEET 1).

WARNING: CONFIRM THAT STRAP STOWAGE PINS ARE IN STOWED POSITION OR DAMAGE WILL OCCUR WHEN THE BOOM IS RAISED. (SEE DETAIL H ON SHEET 6).

AT EQUALIZER (R10) DETACH AND PIVOT THE (4) EQUALIZER LINKS (R13) PINNED IN STOWAGE LOCATION AROUND EQUALIZER LINK PIN (R12) AND ATTACH EQUALIZER LINKS (R13) TO CORRESPONDING INSERT STRAPS. RETAIN PIN (R18) WITH COTTERS (R1 & R4) WITH EQUALIZER LINKS (R13). (SEE DETAIL C ON SHEET 1 AND DETAIL J ON SHEET 6).

DETACH EQUALIZER (R10) FROM BOOM BUTT (R6) BY REMOVING PIN (R16) WITH COLLAR (R11) AND SAFETY PIN (R3) FROM TIE BACK LINKS (R17).
PIVOT TIE BACK LINKS (R17) AROUND UPPER LINK PIN (R16) AND RELOCATE SLOT IN TIE BACK LINKS TO MATCH GROOVE ON EQUALIZER HOLD DOWN BRACKET. (SEE DETAIL J ON SHEET 6).

REATTACH PIN (R16), COLLAR (R11) AND SAFETY PIN (R3) INTO SLOTTED TIE BACK LINK HOLE AND EQUALIZER HOLD DOWN BRACKET GROOVE. (SEE DETAIL C ON SHEET 1).

RIG BLOCK (SEE DELTA NOTE 11 ON SHEET 1) AND RAISE BOOM.

TO DISASSEMBLE BOOM

1. BOOM DOWN AND SUPPORT BOOM ON BLOCKING. UNREEVE BLOCK.
2. ATTACH EQUALIZER (R10) TO BOOM BUTT (R6).
   UNPIN TIE BACK LINKS (R17) FROM STOWAGE LOCATION ON EQUALIZER HOLD DOWN BRACKET (SEE DETAIL C ON SHEET 1) AND ROTATE TO REATTACH TIE BACK LINKS TO EAR ON BOOM BUTT. (SEE DETAIL J ON SHEET 6).
3. WITH BOOM STRAPS POSITIONED IN BRACKETS ON INSERTS AND BOOM TOP (ITEM 1) UNPIN LINKS (R108) AND ROTATE THEM INTO SHIPPING POSITION AND RETAIN THEM TO STRAPS WITH STOWAGE PIN. (SEE DETAIL H ON SHEET 6).
4. AT EQUALIZER/INSERT JOINT DETACH THE (4) EQUALIZER LINKS (R13) FROM THE INSERT STRAP.
   PIVOT THE (4) EQUALIZER LINKS (R13) AROUND EQUALIZER LINK PIN (R12) AND USE PIN (R18) FROM BETWEEN LINKS (R13) TO ATTACH TO LUGS ON EQUALIZER FRAME.
5. SLOWLY BOOM UP TO CREATE ENOUGH TENSION TO SUPPORT BOOM BUTT (R6) WHEN LOWER CONNECTOR PINS (R104) ARE REMOVED.
6. REMOVE PINS (R104) FROM LOWER PIN CONNECTORS AT BUTT JOINT AND BOOM DOWN TO BLOCKING. (SEE VIEW 'STEP 2 BOOM CLOSING')
7. REMOVE PINS (R104) FROM UPPER PIN CONNECTORS AT BUTT JOINT.

   WARNING:
   BOOM MUST BE PROPERLY BLOCKED TO PREVENT SHIFTING DURING PIN REMOVAL.
8. SLOWLY BACK AWAY FROM BOOM.
9. REPEAT ASSEMBLY STEP 1 TO PREP MACHINE WITH BLOCK (ITEM 202) FOR DISASSEMBLY OF BOOM.
10. DISASSEMBLE BOOM.

BILL OF MATERIAL

ITEM NO.	NO. REQD	REC-TION	DESCRIPTION	LENGTH IN	MATERIAL	CODE NO. OR DWG. NO

ASSEMBLIES USED ON

REVISIONS

REFERENCE ONLY!

THIS PRINT REMAINS THE PROPERTY OF MANITOWOC CRANES, INC. ALL INFORMATION CONTAINED THEREIN IS CONFIDENTIAL. IT IS LOANED, SUBJECT TO RETURN UPON DEMAND, AND ON EXPRESS CONDITION THAT IT IS NOT TO BE COPIED OR USED DIRECTLY OR INDIRECTLY IN ANY WAY WHATSOEVER DETRIMENTAL TO OUR INTERESTS.

TOLERANCE UNLESS OTHERWISE SPECIFIED			
DECIMAL PLACES	FABRICATION		MACHINING
	≤ 10 FEET	> 10 FEET	
(1) PLACE 0.0	±.12	±.18	±.03
(2) PLACE 0.00	±.06	±.12	±.015
(3) PLACE 0.000			±.005
ANGLES	±1°30'		±0°30'

FOR MACHINING TOLERANCE REFER TO SITE DIMENSION ON THE SURFACE

SCALE .020	Manitowoc Cranes, Inc.	
DR. RHV	Manitowoc, Wisconsin	BOOM RIGGING
CK. DLG	MODEL MLC150-1	B10:350
APP. JRR		

DWG. NO. 80117858
SHT 6 OF 7

PRIVATE LABELING REQUIREMENT TO CONFORM TO ENGINEERING SPECIFICATION 8829103794 FOR COMPONENTS LISTED IN GD5500-05-035

DATE 01-05-21
REV. LTR. A

DWG. NO. 80117858

BILL OF MATERIAL						
ITEM NO. / NO. REQD.	REQ'D ITEM	DESCRIPTION	LENGTH IN.	MATERIAL	CODE NO. OR DWG. NO.	

ASSEMBLIES USED ON

REVISIONS

INTERMEDIATE SUSPENSION PENDANT (ITEM 106) INSTALLATION

1. INSTALL PENDANT (ITEM 106) FEMALE END TO LUG ON 12M INSERT (ITEM 104). USING SUPPLIER PROVIDED PIN ATTACH TO LUG HOLE CLOSEST TO BOOM BUTT. (SEE DETAIL L ON SHEET 7).
2. FROM EQUALIZER (R10) DETACH TIE BACK LINKS (R17) BY REMOVING PIN (R16), COLLAR (R11) AND SAFETY PIN (R3). (SEE DETAIL C ON SHEET 1).
3. PIVOT TIE BACK LINKS TOWARD BOOM TOP AND INSTALL PENDANT (ITEM 106) MALE END BETWEEN TIE BACK LINKS AND REINSTALL PIN (R16), COLLAR (R11) AND SAFETY PIN (R3) THRU SLOTTED HOLE. (SEE DETAIL M ON SHEET 7).

   FOR REMOVAL OF INTERMEDIATE SUSPENSION PENDANT (ITEM 106) REVERSE INSTALLATION STEPS 1 THRU 3.

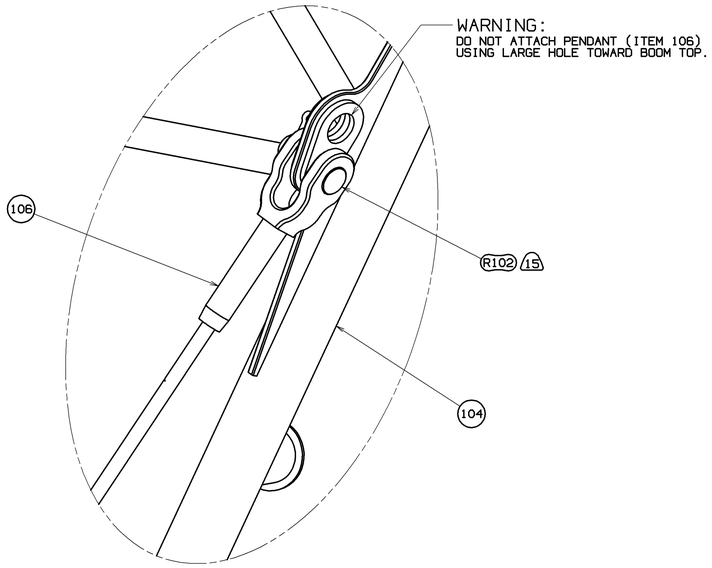

DETAIL L
SCALE 0.300

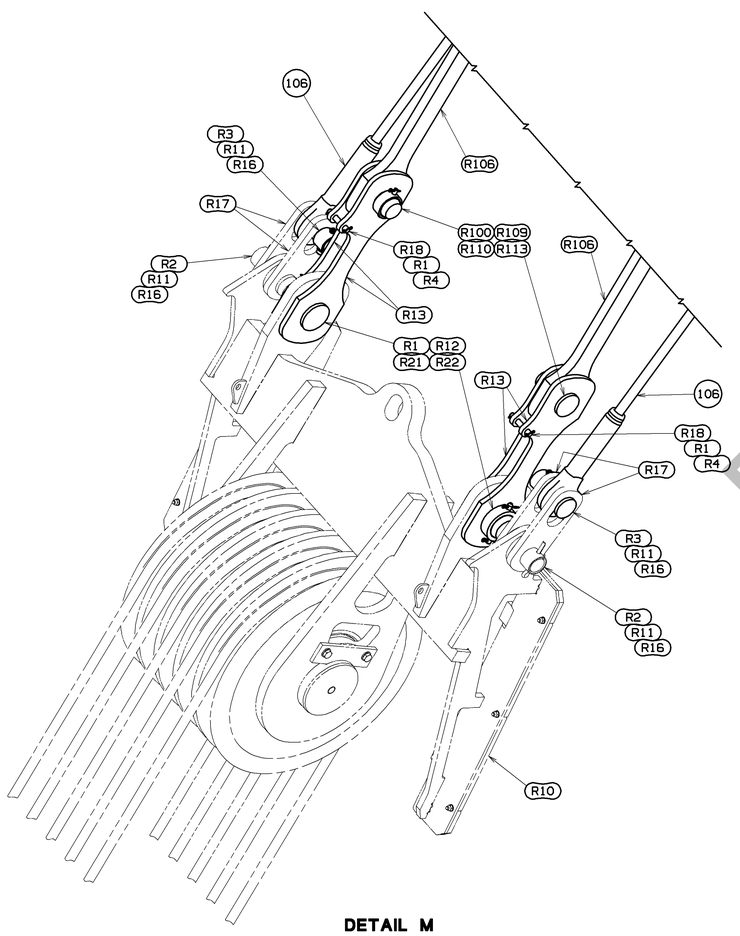

DETAIL M
SCALE 0.200

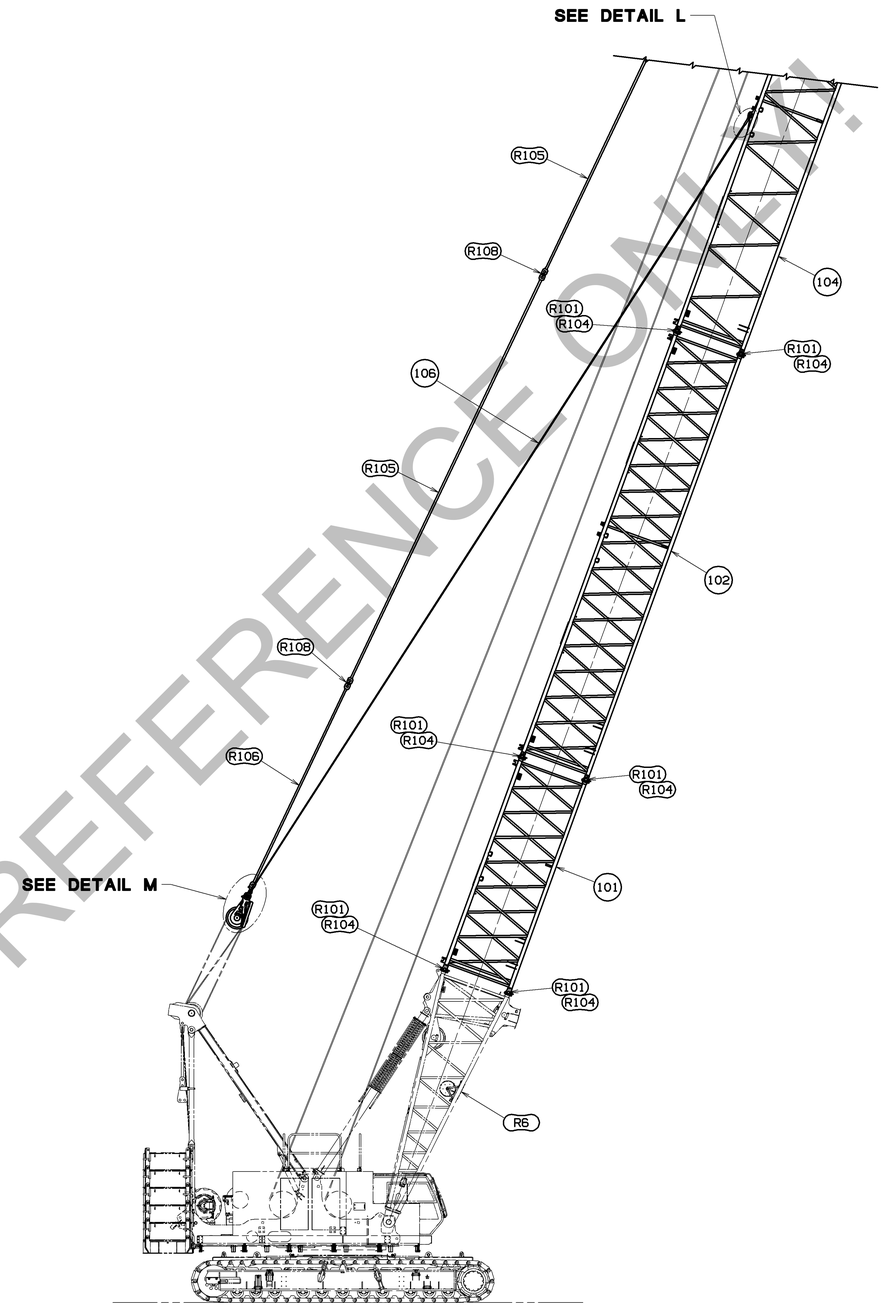

69.0 M (226.4 FT)
72.0 M (236.2 FT)
75.0 M (246.1 FT)
78.0 M (255.9 FT)
#350 BOOM SHOWN

REFERENCE ONLY!

THIS PRINT REMAINS THE PROPERTY OF MANITOWOC CRANES, INC. ALL INFORMATION CONTAINED THEREIN IS CONFIDENTIAL. IT IS LOANED, SUBJECT TO RETURN UPON DEMAND, AND ON EXPRESS CONDITION THAT IT IS NOT TO BE COPIED OR USED DIRECTLY OR INDIRECTLY IN ANY WAY WHATSOEVER DETRIMENTAL TO OUR INTERESTS.

TOLERANCE UNLESS OTHERWISE SPECIFIED			
DECIMAL PLACES	FABRICATION ≤ 10 FEET	FABRICATION > 10 FEET	MACHINING
(1) PLACE 0.0	±.12	±.18	±.03
(2) PLACE 0.00	±.06	±.12	±.015
(3) PLACE 0.000			±.005
ANGLES	±1°30'		±0°30'

MACHINING TOLERANCE ON NON-MACHINED SURFACE

SCALE .020

Manitowoc Cranes, Inc.
Manitowoc, Wisconsin

DR. RHV
CK. DLG
MODEL ML C150-1
APP JRR

BOOM RIGGING
B10:350

DWG. NO. 80117858
SHT 7 OF 7

PRIVATE LABELING REQUIREMENT TO CONFORM TO ENGINEERING SPECIFICATION 6829103794 FOR COMPONENTS LISTED IN GDS500-05-035

DATE 01-05-21

REV. LTR. A

DWG. NO. 80117858

DO NOT SCALE THIS DRAWING