GROVE® by Manitowoc

GMK5250XL-1

Product Guide

ASME B30.5
Imperial 85%

Features

- 250 t (300 USt) capacity
- 78,5 m (257.5 ft) eight-section main boom
- 17,8 m (58.4 ft) swingaway with jib and/or boom insert
- Maximum 33,8 m (111 ft) length and up to 50° offset
- VIAB turbo retarder clutch
- Single engine concept — less fuel consumption

GROVE GMK5250XL-1

The GMK5250XL-1 puts power and performance to work for you with high capacities on a five-axle, all-terrain crane and 78,5 m (257.5 ft) main boom.

Features

> VIAB turbo retarder clutch option

The Grove five-axle is the first all-terrain crane to utilize a VIAB turbo clutch module, which is used by a number of heavy-duty trucks. It enables wear-free starting and braking, avoids overheating and burning, and reduces fuel consumption to a minimum, adding substantial fuel savings of approximately 30% compared with its predecessor, the GMK5275. VIAB is a turbo coupling and integrated retarder all in one, which means less weight and less space.

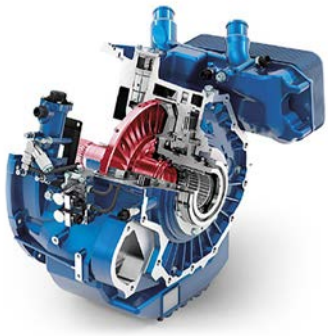

> Convenient transportation logistics

Logistic benefits due to interchangeable counterweight slabs and self-rigging auxiliary hoist. Once on the jobsite, the crane can be moved while carrying its full counterweight of 80 t (176,300 lb), and its ability to travel in this configuration saves valuable time on the job that would otherwise be taken up with installing and removing counterweight sections. In addition, some of the counterweight slabs are interchangeable with those of the GMK5180-1/5200-1, GMK5250L/L-1 and GMK6300L/L-1. The self-rigging auxiliary hoist eliminates the need for an assist crane during on-site rigging.

> Superior strength and reach

Boosting overall reach is a 17,8 m (58.4 ft) hydraulic swingaway jib, which can be extended with either an 8 m (26 ft) boom extension, 8 m (26 ft) jib insert or a combination of both, for a total possible jib length of 33.8 m (111 ft). For optimum usage, the full jib can also be operated while the crane is working with its 72 m (236 ft) boom length extended. Another beneficial feature of the jib is its ability to offer increased offset of up to 50° compared to a typical 40° offset on other Grove cranes in its class; plus there is an optional integrated heavy-duty jib available.

> CraneSTAR

CraneSTAR is an exclusive and innovative crane asset management system that helps improve your profitability and reduce costs by remotely monitoring critical crane data. Visit www.cranestar.com for more information.

Jobsite benefits

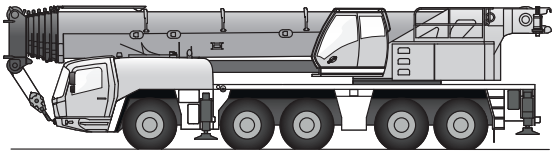

- Five outrigger positions provide ultimate flexibility for jobsites with the ability to position the crane in tighter spaces.
- Mercedes-Benz engine and transmission with VIAB turbo clutch for premium maneuverability, optimized fuel consumption and powerful integrated retarder.
- Jobsite movement with full counterweight saves setup time.
- The GMK5250XL-1 is designed with a self-rigging auxiliary hoist, saving time and costs associated with operating an assist crane.
- Available swingaway configurations and extensions provide excellent flexibility and reach with up to 33,8 m (111 ft) and a 50° offset to reach over obstacles.
- Higher utilization, with load charts usually offered by six-axle cranes.
- Longest boom in class.

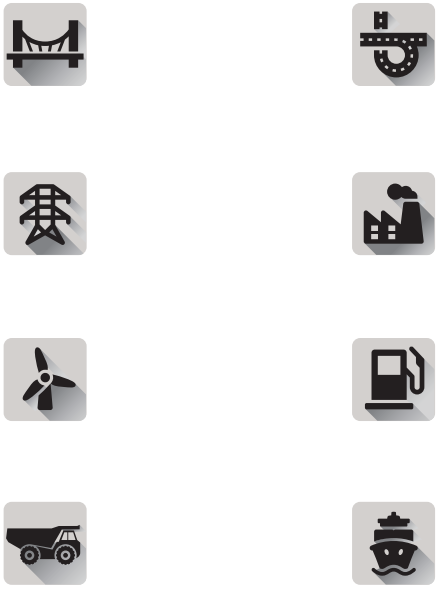

Manitowoc Crane Care™

Manitowoc Crane Care when you need it.
The assurance of the world's most advanced crane service and support to get you back to work fast.

Manitowoc Finance™

Manitowoc Finance helps you get right to work generating profits for your business.
Financial tools that help you capitalize on opportunity with solutions that fit your needs.

Contents

Dimensions 5

Weights 9

Data 11

Working range (Main boom) 12

Load charts (Main boom) 13

Specifications 34

Symbols glossary 35

Dimensions

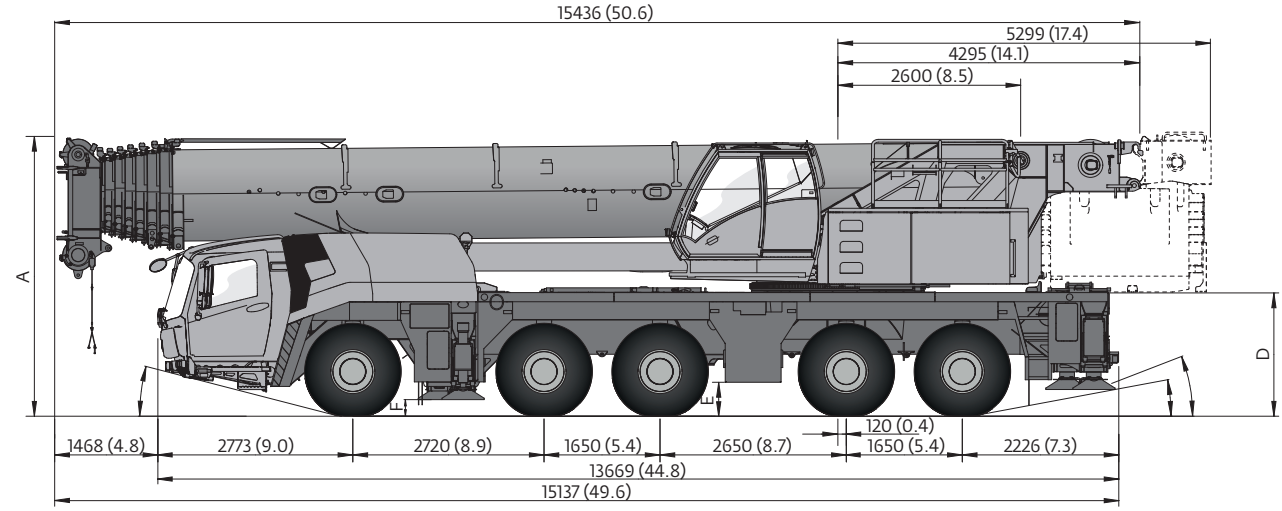

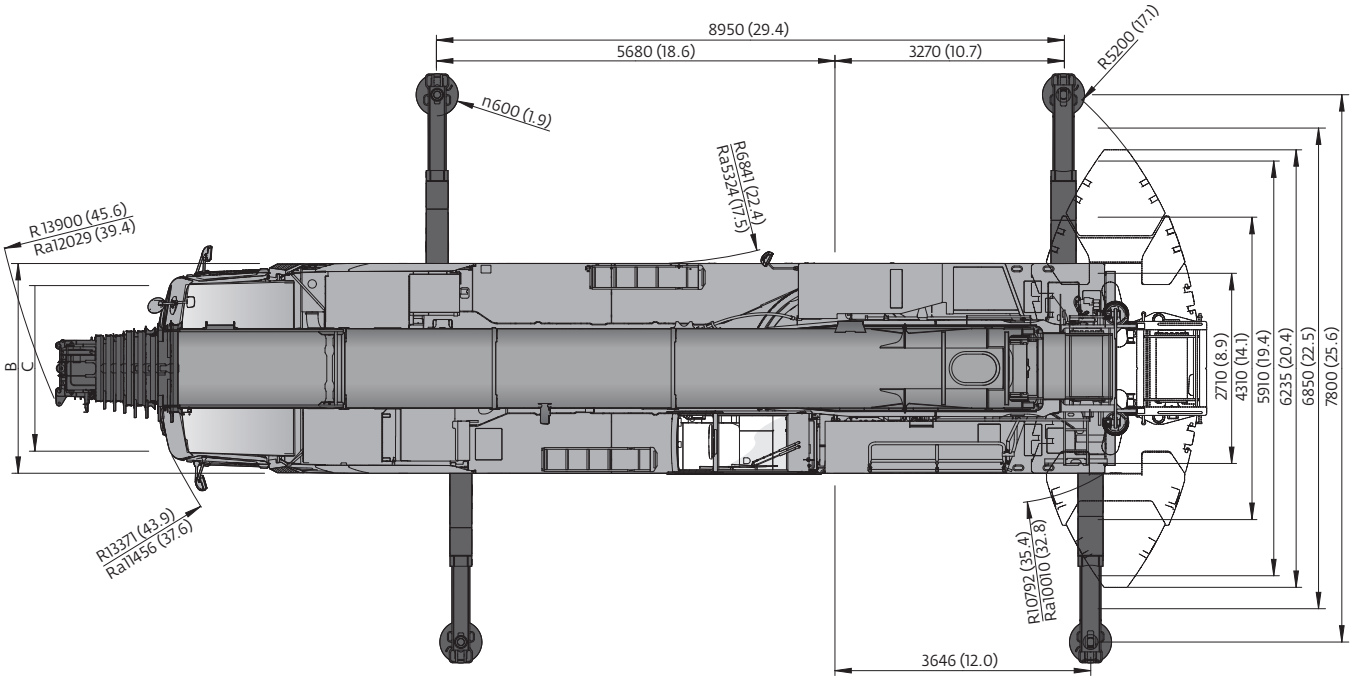

Dimensions shown are in mm (ft).

Ra = Radius all wheels steered

	A	A 130 mm**	B	C	D	E	F	α	β	β_1
385/95 R25	3950 (13.0)	3820 (12.5)	3000 (9.8)	2570 (8.4)	1822 (6.0)	486 (1.6)	228 (0.8)	14	8	6
445/95 R25	4000 (13.1)	3870 (12.7)	3000 (9.8)	2510 (8.2)	1872 (6.1)	536 (1.8)	278 (0.9)	16	10	8
525/80 R25	4000 (13.1)	3870 (12.7)	3100 (10.2)	2530 (8.3)	1872 (6.1)	536 (1.8)	278 (0.9)	16	10	8

** *Lowered*

Dimensions

Counterweight

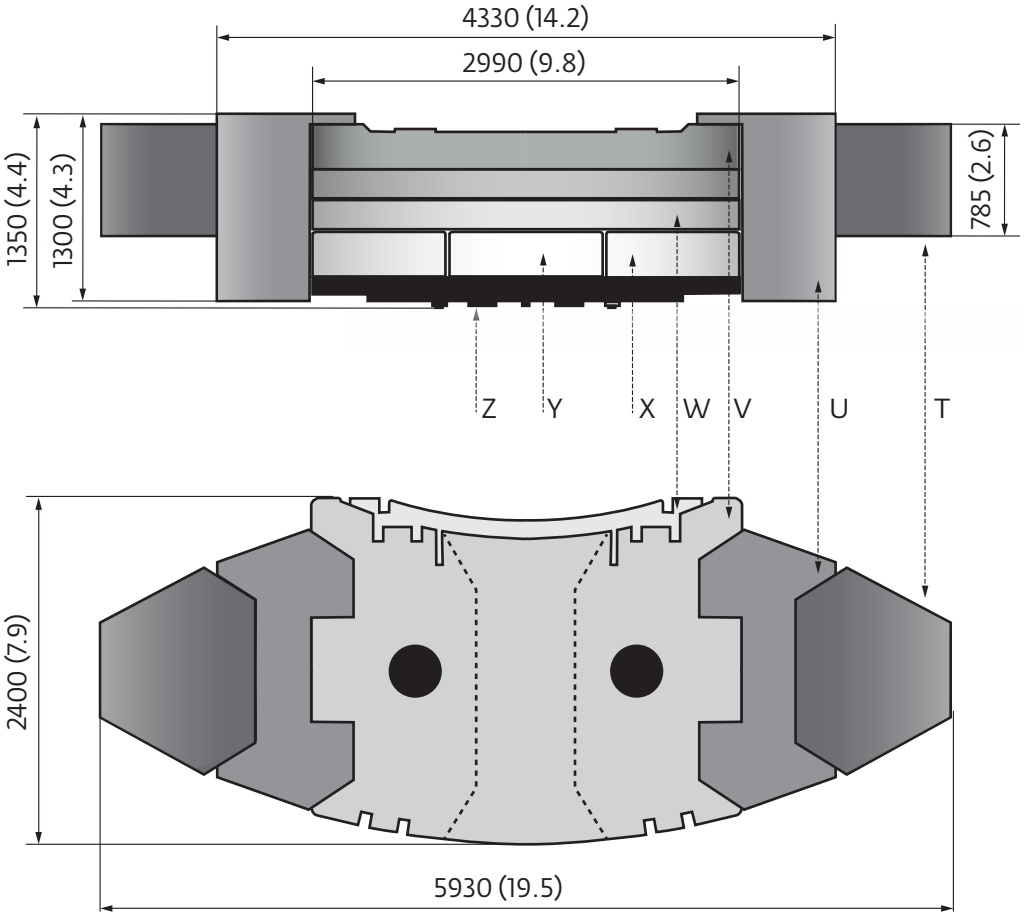

Dimensions shown are in mm (ft).

	Z 7,0 t (7.7 USt)	Y 4,5 t (5.0 USt)	X 4,75 t (5.2 USt)	W 9,5 t (10.5 USt)	V 10,0 t (11.0 USt)	U 10,0 t (11.0 USt)	T 5,0 t (5.5 USt)
7,0 t (7.7 USt)	x						
16,5 t (18.2 USt)	x		2 x				
21,0 t (23.1 USt)	x	x	2 x				
26,0 t (28.7 USt)	x		2 x	x			
30,5 t (33.6 USt)	x	x	2 x	x			
35,5 t (39.1 USt)	x		2 x	2 x			
40,0 t (44.1 USt)	x	x	2 x	2 x			
45,5 t (50.2 USt)	x		2 x	2 x	x		
50,0 t (55.1 USt)	x	x	2 x	2 x	x		
70,0 t (77.2 USt)	x	x	2 x	2 x	x	2 x	
80,0 t (88.2 USt)	x	x	2 x	2 x	x	2 x	2 x

Auxiliary hoist

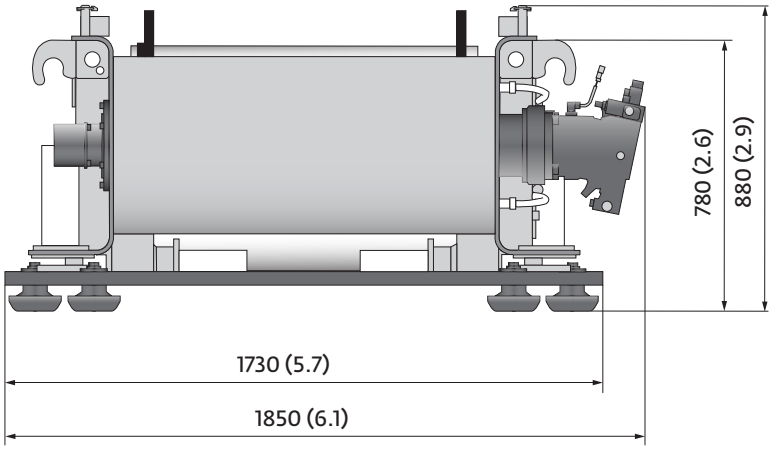

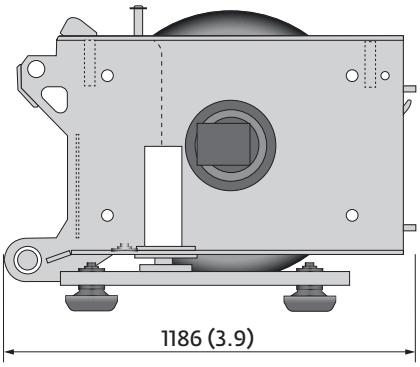

Dimensions shown are in mm (ft).

kg (lb)	2255 (4972)

Hose reel

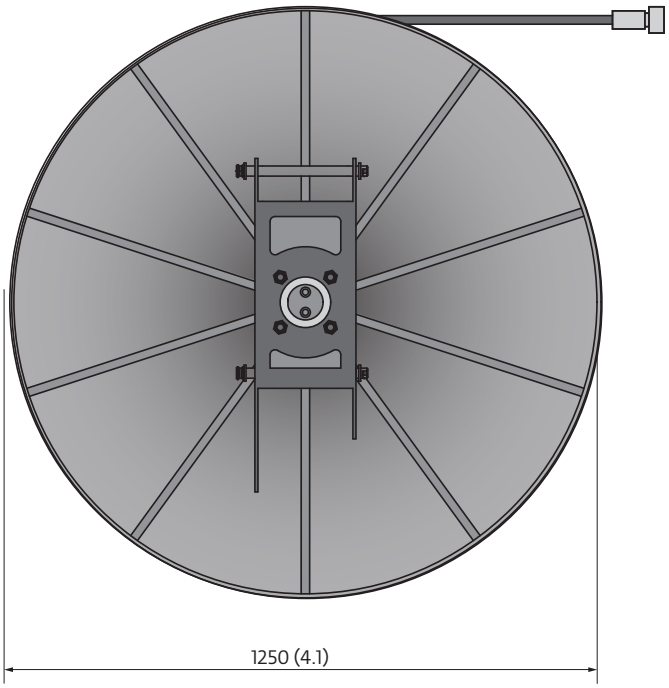

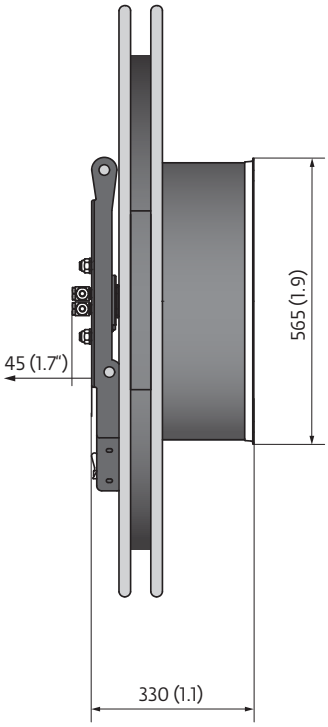

Dimensions shown are in mm (ft).

kg (lbs)	185 (408)

Dimensions

Jib combinations

	L x W x h	kg lb
A	3,8 x 0,8 x 1,3 (12.5' x 2.6' x4.3')	950 (2094 lb)
B	8,5 x 0,8 x 1,1 (27.9' x 2.6' x 3.6')	575 (1268 lb)
C	6,9 x 0,5 x 0,7 (22.6' x 1.6' x 2.3')	350 (772 lb)
D	9,0 x 0,8 x 1,1 (29.5' x 2.6' x 3.6')	525 (1157 lb)
E	8,1 x 0,8 x 1,1 (26.6' x 2.6' x 3.6')	650 (1433 lb)

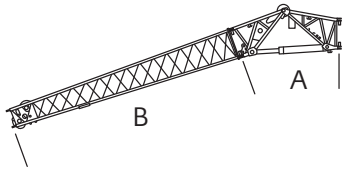

11,2 m (37 ft)

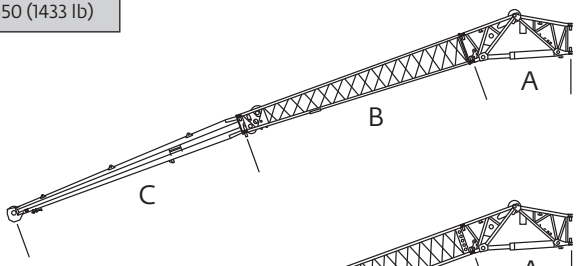

17,8 m (58 ft)

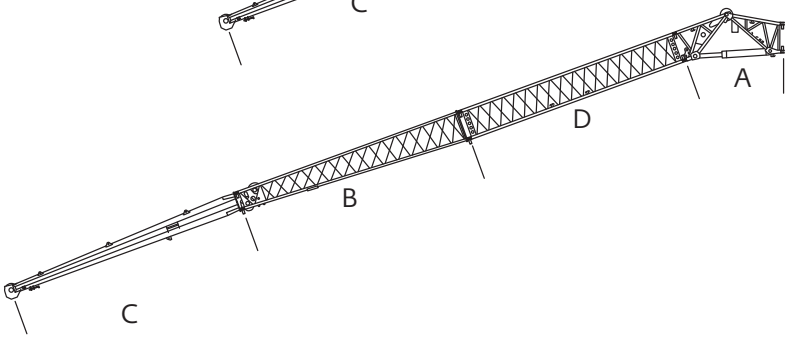

25,8 m (85 ft)

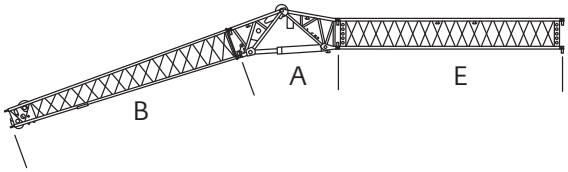

19,2 m (63 ft)

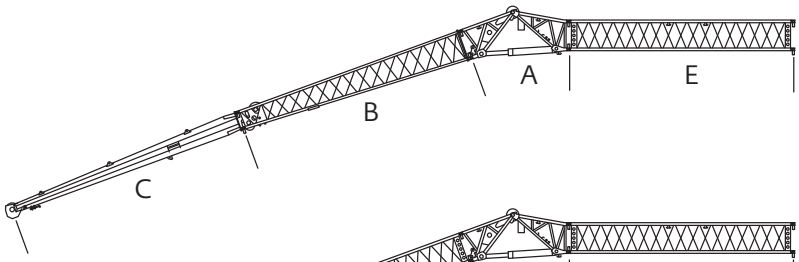

25,8 m (85 ft)

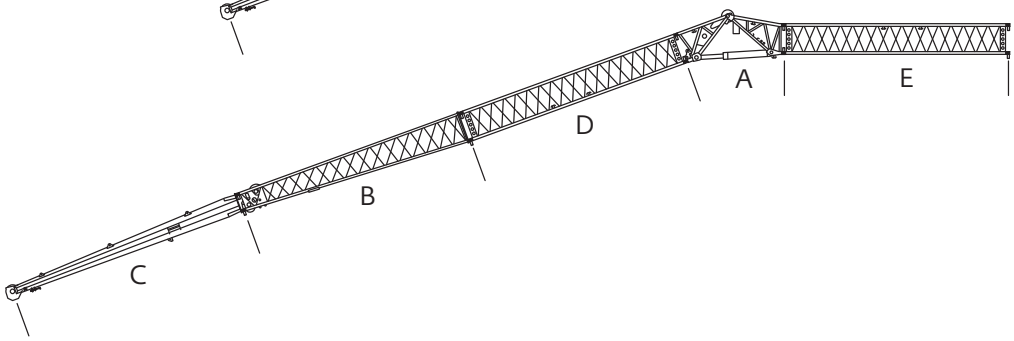

33,8 m (111 ft)

Dimensions shown are in mm (ft).

Boom over front

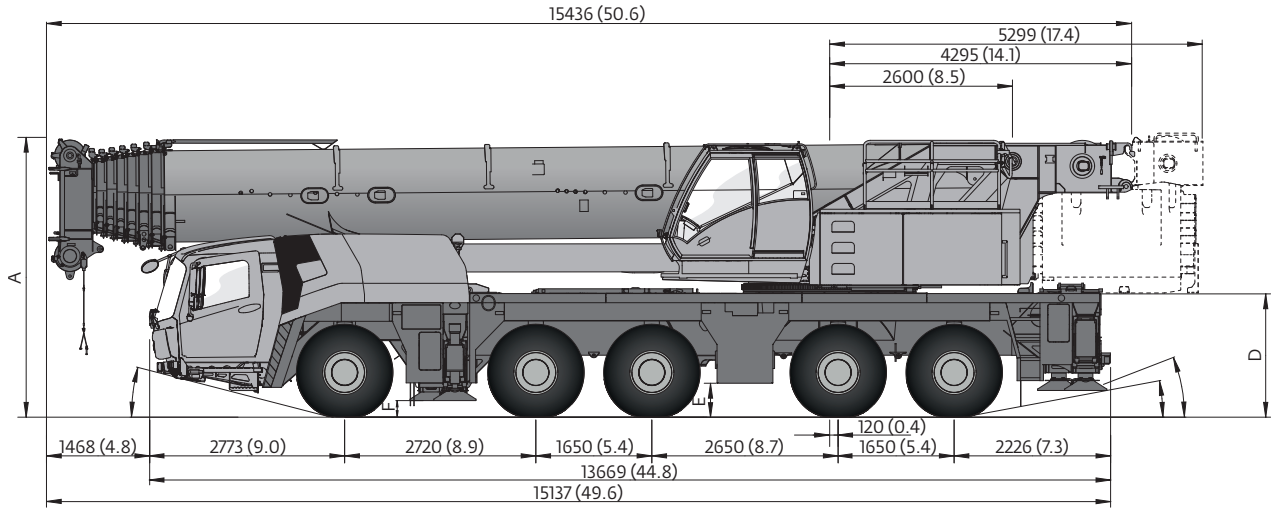

Dimensions shown are in mm (ft).

Basic Weights — kg (lb)	Axles 1 and 2	Axles 3 – 5	Total
Mercedes-Benz power T4f, VIAB, 16.00 R25 tires on aluminum, 10 x 6 x 10 drive/steer, 2nd oil cooler, nylatron outrigger pads, full fuel tank.	23.820 kg (52,514 lb)	35.190 kg (77,580 lb)	59.020 kg (130,110 lb)
Additions			
10 x 8 x 10 drive/steer	182 kg (401 lb)	209 kg (460 lb)	209 kg (861 lb)
Spare wheel 14.00 R25 XGC steel rim with stowage	-224 kg (-493 lb)	509 kg (1122 lb)	285 kg (628 lb)
Spare wheel 16.00 R25 XGC steel rim with stowage	-265 kg (-585 lb)	603 kg (1330 lb)	338 kg (745 lb)
Spare wheel 20.5 R25 XGC steel rim with stowage	-315 kg (-694 lb)	716 kg (1578 lb)	401 kg (884 lb)
Brackets for hydraulic swingaway	105 kg (232 lb)	2 kg (4 lb)	107 kg (236 lb)
Hose reel for hydraulic swingaway	270 kg (596 lb)	85 kg (-188 lb)	185 kg (408 lb)
11,2 m – 17,8 m (37 ft – 58 ft) hydraulic swingaway	1537 kg (3389 lb)	11 kg (23 lb)	1548 kg (3412 lb)
Auxiliary hoist	-2098 kg (-4626 lb)	4353 kg (9597 lb)	2255 kg (4971 lb)
7000 kg (15,400 lb) base plate stowed on carrier	4770 kg (10,515 lb)	1943 kg (4284 lb)	6713 kg (14,800 lb)
7000 kg (15,400 lb) base plate fixed to turntable	-5306 kg (-11,700 lb)	4349 kg (26,500 lb)	6713 kg (14,800 lb)
Substitutions			
14.00 R25 tires	-212 kg (-468 lb)	-318 kg (-702 lb)	-530 kg (-1170 lb)
20.5 R25 tires	252 kg (556 lb)	378 kg (834 lb)	630 kg (1390 lb)
Removals			
Boom assembly w/o lift cylinder	-14.994 kg (-33,055 lb)	-6518 kg (-14,370 lb)	-21.512 kg (-47,426 lb)
Front outriggers	-2063 kg (-4549 lb)	-15 kg (-34 lb)	-2078 kg (-4583 lb)
Rear outriggers	1772 kg (3907 lb)	-4349 kg (-9588 lb)	-2577 kg (-5681 lb)
Front and rear nylatron outrigger floats	-21 kg (-46 lb)	-179 kg (-394 lb)	-200 kg (-441 lb)

Weights

Trailing Boom

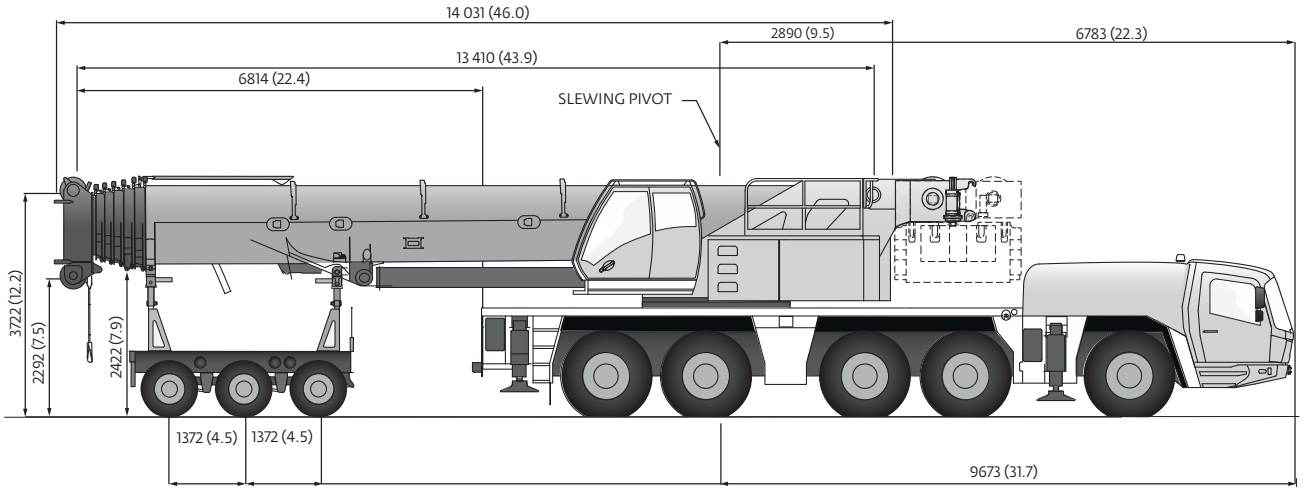

Dimensions shown are in mm (ft).

Basic Weights — kg (lb)	Axles 1 and 2	Axles 3–5	Dolly	Total
Mercedes-Benz power T4f, VIAB: 20.5 R25 tires, 10 x 8 x 10 drive/steer, 1,2 m – 17,8 m (37 – 58 ft) hydraulic luffing swingaway, 2-line boom nose, 2nd oil cooler, nylatron outrigger pads, auxiliary hoist, full fuel tank, 3-axle boom dolly (4300 kg/9400 lb)	18 980 kg (41,840 lb)	30 180 kg (66,510 lb)	18 330 kg (40,440 lb)	67 370 kg (148,500 lb)
Additions				
7000 kg (15,400 lb) base plate stowed on carrier	4770 kg (10,515 lb)	1943 kg (4285 lb)	0 kg (0 lb)	6713 kg (14,800 lb)
7000 kg (15,400 lb) base plate fixed to turntable	4770 kg (10,515 lb)	1943 kg (4285 lb)	0 kg (0 lb)	6713 kg (14,800 lb)
Removals				
Brackets for hydraulic swingaway incl. hose reel	400 kg (880 lb)	-691 kg (-1524 lb)	-260 kg (-573 lb)	-292 kg (-644 lb)
11,2 m – 17,8 m (37 ft – 58 ft) hydraulic swingaway	1661 kg (3662 lb)	-3208 kg (-7074 lb)	-880 kg (-1940 lb)	-1548 kg (-3413 lb)
Auxiliary hoist	-1917 kg (-4227 lb)	-337 kg (-744 lb)	0 kg (0 lb)	-2254 kg (-4971 lb)
2-line boom nose	18 kg (40 lb)	27 kg (60 lb)	-260 kg (-574 lb)	-215 kg (-474 lb)
Front outriggers	-2063 kg (-4549 lb)	-15 kg (-34 lb)	0 kg (0 lb)	-2078 kg (-4583 lb)
Rear outriggers	1772 kg (3907 lb)	-4349 kg (-9588)	0 kg (0 lb)	-2577 kg (-5681 lb)
Front and rear nylatron outrigger floats	-21 kg (-46 lb)	-179 kg (-394 lb)	0 kg (0 lb)	-200 kg (-441 lb)
Substitutions				
10 x 6 x 10 drive/steer	-182 kg (-401 lb)	-208 kg (-460 lb)	0 kg (0 lb)	-390 kg (-861 lb)
14.00 R25 tires	-464 kg (-1023 lb)	-696 kg (-1535 lb)	0 kg (0 lb)	-1160 kg (-2558 lb)
16.00 R25 tires	-252 kg (-555 lb)	-378 kg (-834 lb)	0 kg (0 lb)	-630 kg (-1389 lb)

Lifting Capacity	Sheaves	Weight	Parts of line	Possible load with crane
200 t (220 USt)	9	2400 kg (5291 lb)	2 – 18 ▪	180 t (198 USt) ▪
160 t (176 USt)	7	1750 kg (3858 lb)	2 – 15	150 t (165 USt)
125 t (137 USt)	5	1650 kg (3638 lb)	2 – 11	110 t (121 USt)
80 t (88 USt)	3	950 kg (2095 lb)	2 – 7	70 t (77 USt)
32 t (35 USt)	1	600 kg (1323 lb)	2 – 3	30 t (33 USt)
12 t (13 USt)	Overhaul Weight	300 kg (662 lb)	1	10 t (11 USt)

▪ *0° over rear with additional equipment*

	1	2	3	4	5	6	7	8	9	10	11	12	13	14	15	16	R	
mp/h	4.2	5.1	6.5	7.6	9.4	11.4	13.7	16.5	18.7	22.6	27.7	33.8	41.4	49.9	52.8	52.8	3.7	50%
	14.00R25 (385/95R25), 16.00R25 (445/95R25), 20.5R25 (525/80R25)																	

** Theoretical gradeability*

	Infinitely variable		Rope	Max. single line pull
	0 – 125 m/min (0 – 410 FPm)	Single line	22 mm/300 m (984 ft)	93.5 kN (21,020 lb)
	0 – 125 m/min (0 – 410 FPm)	Single line	22 mm/300 m (1083 ft)	93.5 kN (21,020 lb)
	0 – 1,45 min^{-1}			
	-1,5° to + 82°	approx. 65 s		
	13,4 to 78,5 m (44 to 157.5 ft)	approx. 600 s		

Working range

Main boom

13,4 m – 78,5 m (44 ft – 257.5 ft) | 7,8 m (25.6 ft) | 360° | 80 t (176,300 lb)

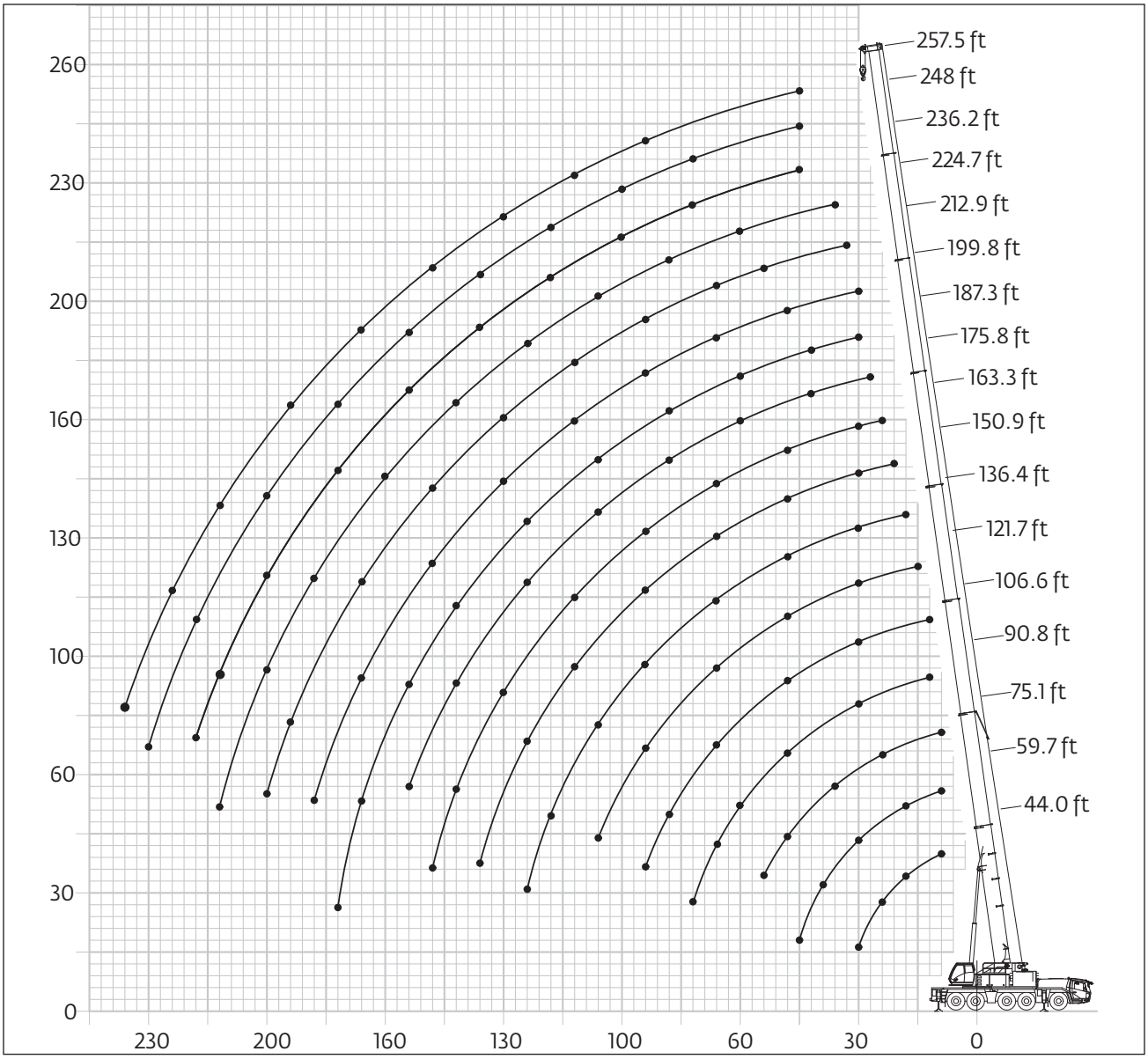

	Hook block t (USt)	H
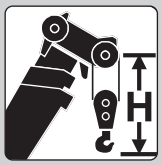	200 D (220 D)	3800 mm (12.5 ft)
	160 D (176 D)	3650 mm (12.0 ft)
	125 D (138 D)	3600 mm (11.8 ft)
	80 E/D (88 E/D)	3600 mm (11.8 ft)
	32 E (35 E)	3400 mm (11.2 ft)
	12 H/B (13 H/B)	2800 mm (9.2 ft)

THIS CHART IS ONLY A GUIDE AND SHOULD NOT BE USED TO OPERATE THE CRANE.
The individual crane's load chart, operating instructions and other instructional plates must be read and understood prior to operating the crane.

13,4 m – 78,5 m (44 ft – 257.5 ft) | 7,8 m (25.6 ft) | 360° | 80 t (176,300 lb)

Pounds x 1000

Feet	44.0	59.6	75.3	90.9	106.5	121.7	136.4	150.8	163.3	175.8	188.3	199.7	212.9	224.7	236.2	248.2	257.5
10	308.0	286.0	286.0														
15	284.0	282.0	256.0	213.0													
20	232.0	230.0	228.0	210.0	160.0	134.0											
25	195.0	195.0	194.0	191.0	160.0	129.0	110.0										
30	166.0	166.0	165.0	164.0	150.0	125.0	109.0	91.0	76.0								
35		144.0	143.0	142.0	140.0	122.0	105.0	89.0	76.0	64.0							
40		126.0	125.0	124.0	125.0	114.0	98.0	84.0	73.0	64.0	54.0	47.0					
45		109.0	110.0	109.0	110.0	106.0	92.0	80.0	68.0	63.0	54.0	47.0	38.0				
50			97.0	97.0	97.0	98.0	86.0	75.0	63.0	59.0	53.0	47.0	38.0	33.0	32.0	24.2	
55			86.0	87.0	86.0	88.0	80.0	70.0	59.0	56.0	51.0	46.0	38.0	33.0	32.0	24.2	22.0
60			79.0	78.0	77.0	79.0	75.0	66.0	56.0	52.0	48.0	44.0	37.8	33.0	32.0	24.2	22.0
65				71.0	69.0	71.0	71.0	62.0	52.0	49.0	45.0	42.4	36.8	33.0	32.0	24.2	22.0
70				64.0	63.0	64.0	66.0	58.0	48.0	45.0	42.4	40.4	35.2	32.2	31.4	24.2	22.0
75				57.0	57.0	59.0	60.0	55.0	45.0	42.0	39.6	38.2	33.8	31.2	30.2	24.2	22.0
80					55.0	54.0	55.0	52.0	42.2	38.8	37.2	36.2	32.4	30.0	28.8	24.2	21.8
85					51.0	49.0	51.0	50.0	40.4	36.4	34.6	34.2	31.0	28.8	27.4	23.4	21.2
90					46.0	46.0	47.0	47.0	38.8	34.0	32.4	32.2	29.6	27.6	26.2	22.6	20.6
95						43.2	43.0	45.0	37.2	31.8	30.4	30.4	28.4	26.6	25.0	21.8	19.8
100						40.8	39.4	41.2	36.0	29.8	28.6	28.6	26.8	25.4	24.0	21.0	19.2
110							35.4	35.4	33.4	26.6	25.2	25.2	24.0	23.4	21.8	19.4	17.8
120							31.0	30.6	31.2	23.4	22.0	22.0	21.2	20.6	20.2	18.0	16.4
130								27.6	27.6	21.0	19.6	19.6	18.6	18.6	18.4	16.4	15.0
140									24.2	19.8	17.8	17.6	16.6	16.8	16.8	15.2	13.8
150									16.2	18.4	16.2	15.8	14.8	15.0	15.2	14.0	12.8
160										16.8	14.8	14.2	13.4	13.4	13.8	13.2	11.8
170											13.6	12.8	12.0	12.2	12.4	12.2	10.8
180												11.4	10.8	10.8	11.2	11.2	9.8
190													9.6	9.8	10.0	10.0	9.0
200														9.0	9.0	9.0	8.2
210															8.2	8.2	7.4
220																7.4	6.6
230																	6.0
240																	4.0

THIS CHART IS ONLY A GUIDE AND SHOULD NOT BE USED TO OPERATE THE CRANE.
The individual crane's load chart, operating instructions and other instructional plates must be read and understood prior to operating the crane.

Load charts

Main boom

13,4 m – 78,5 m (44 ft – 257.5 ft) | 7,8 m (25.6 ft) | 360° | 70 t (154,300 lb)

Pounds x 1000

Feet	44.0	59.6	75.3	90.9	106.5	121.7	136.4	150.8	163.3	175.8	188.3	199.7	212.9	224.7	236.2	248.2	257.5
10	308.0	286.0	286.0														
15	282.0	278.0	256.0	213.0													
20	230.0	228.0	226.0	210.0	160.0	134											
25	192.0	192.0	191.0	190.0	160.0	129	110.0										
30	163.0	163.0	162.0	161.0	150.0	125	109.0	91.0	76.0								
35	57.0	140.0	140.0	139.0	140.0	122	105.0	89.0	76.0	64.0							
40		122.0	121.0	119.0	121.0	114	98.0	84.0	73.0	64.0	54.0	47.0					
45		107.0	105.0	106.0	105.0	106	92.0	80.0	68.0	63.0	54.0	47.0	38.0				
50		60.0	93.0	93.0	92.0	93	86.0	75.0	63.0	59.0	53.0	47.0	38.0	33.0	28.6	24.2	
55			83.0	83.0	81.0	82	80.0	70.0	59.0	56.0	51.0	46.0	38.0	33.0	28.6	24.2	21.8
60			75.0	74.0	73.0	73	74.0	66.0	56.0	52.0	48.0	44.0	37.8	33.0	28.6	24.2	21.8
65			56.0	67.0	68.0	66	66.0	62.0	52.0	49.0	45.0	42.4	36.8	33.0	28.6	24.2	21.8
70				59.0	61.0	60	60.0	58.0	48.0	45.0	42.4	40.4	35.2	32.2	28.6	24.2	21.8
75				53.0	55.0	56	54.0	55.0	45.0	42.0	39.6	38.2	33.8	31.2	28.6	24.2	21.8
80				41.0	50.0	52	50.0	51.0	42.2	38.8	37.2	36.2	32.4	30.0	27.8	24.2	21.6
85					45.0	47	45.0	47.0	40.4	36.4	34.6	34.2	31.0	28.8	27.0	23.4	21.0
90					41.0	42.8	43.0	43.0	38.8	34.0	32.4	32.2	29.6	27.6	26.0	22.6	20.4
95					33.8	39.2	41.0	39.4	37.2	31.8	30.4	30.4	28.4	26.6	25.0	21.8	19.8
100						36.2	37.8	36.2	36.0	29.8	28.6	28.6	26.8	25.4	24.0	21.0	19.2
110						25.4	32.4	31.0	32.0	26.6	25.2	25.2	24.0	23.4	21.8	19.4	17.8
120							28.0	29.0	27.4	23.4	22.0	22.0	21.2	20.6	20.2	18.0	16.4
130								25.4	23.4	21.0	19.6	19.6	18.6	18.6	18.4	16.4	15.0
140								14.8	20.2	19.8	17.8	17.6	16.6	16.8	16.8	15.2	13.8
150									16.2	18.2	16.2	15.2	14.8	15.0	15.2	14.0	12.8
160										15.8	14.0	12.8	12.8	13.4	13.8	13.2	11.8
170											12.0	10.6	10.8	12.0	12.4	12.2	10.8
180												8.8	8.8	10.8	10.6	10.8	9.8
190												2.4	7.2	9.8	9.6	9.2	9.0
200													5.4	8.4	8.8	7.8	7.6
210															7.4	6.4	6.2
220															6.2	5.2	5.0
230																	4.0
240																	2.8

THIS CHART IS ONLY A GUIDE AND SHOULD NOT BE USED TO OPERATE THE CRANE.
The individual crane's load chart, operating instructions and other instructional plates must be read and understood prior to operating the crane.

13,4 m – 78,5 m (44 ft – 257.5 ft) | 7,8 m (25.6 ft) | 360° | 50 t (110,200 lb)

Pounds x 1000

Feet	44.0	59.6	75.3	90.9	106.5	121.7	136.4	150.8	175.8	188.3	199.7	212.9	224.7	236.2	248.2	257.5
10	308.0	286.0	286.0													
15	276.0	272.0	256.0	213.0												
20	224.0	220.0	220.0	210.0	160.0	134.0										
25	185.0	185.0	184.0	183.0	160.0	129.0	110.0									
30	153.0	154.0	153.0	148.0	143.0	125.0	109.0	91.0								
35	57.0	129.0	127.0	125.0	117.0	114.0	105.0	89.0	64.0							
40		110.0	110.0	104.0	102.0	96.0	95.0	84.0	64.0	54.0	47.0					
45		92.0	93.0	88.0	87.0	87.0	82.0	80.0	63.0	54.0	47.0	38.0				
50		60.0	78.0	79.0	76.0	76.0	71.0	71.0	59.0	53.0	47.0	38.0	33.0	29.6	24.2	
55			67.0	70.0	66.0	67.0	66.0	63.0	56.0	51.0	46.0	38.0	33.0	29.6	24.2	22.0
60			58.0	60.0	61.0	59.0	60.0	56.0	52.0	48.0	44.0	37.8	33.0	29.6	24.2	22.0
65			50.0	53.0	55.0	53.0	54.0	50.0	46.0	45.0	42.4	36.8	33.0	29.6	24.2	22.0
70				47.0	49.0	47.0	48.0	45.0	41.2	40.2	40.4	35.2	32.2	29.2	24.2	22.0
75				41.4	43.8	42.4	43.8	40.6	37.0	37.6	36.8	33.8	31.2	28.6	24.2	22.0
80				34.2	39.2	37.8	39.8	36.8	33.4	35.2	33.2	32.4	30.0	27.8	24.2	21.8
85					35.2	34.0	36.0	33.4	31.0	32.0	30.0	29.6	28.8	27.0	23.4	21.2
90					31.8	30.6	32.6	30.4	29.6	29.2	27.4	27.0	27.2	26.0	22.6	20.6
95					28.8	27.4	29.6	27.6	28.4	26.6	24.8	24.4	24.8	25.0	21.8	19.8
100						24.8	26.8	25.0	26.8	24.4	22.6	22.2	23.6	23.2	21	19.2
110						20.4	22.2	20.4	22.8	20.4	18.8	18.4	21.0	18.6	19.4	17.8
120							18.6	16.6	19.0	17.2	15.6	15.2	17.8	17.0	16.6	16.2
130								13.6	15.8	14.0	12.8	12.6	15.2	15.4	14.0	13.6
140								11.0	13.2	11.4	10.2	10.2	12.8	13.0	11.6	11.4
150									11.0	9.2	7.8	8.0	10.6	11.0	9.8	9.4
160									9.0	7.2	6.0	6.0	8.8	9.2	8.0	7.8
170										5.6	4.2	4.4	7.0	7.4	6.4	6.2
180											2.8	2.8	5.4	6.0	4.8	4.6
190													4.2	4.6	3.6	3.4
200													3.0	3.4	2.4	2.2
210														2.4		

THIS CHART IS ONLY A GUIDE AND SHOULD NOT BE USED TO OPERATE THE CRANE.
The individual crane's load chart, operating instructions and other instructional plates must be read and understood prior to operating the crane.

Load charts

Main boom

13,4 m – 78,5 m (44 ft – 257.5 ft) | 7,8 m (25.6 ft) | 360° | 45,5 t (100,300 lb)

Pounds x 1000

Feet	44.0	59.6	75.3	90.9	106.5	121.7	136.4	150.8	163.3	175.8	188.3	199.7	212.9	224.7	236.2	248.2	257.5
10	308.0	286.0	286.0														
15	274.0	272.0	256.0	213.0													
20	222.0	220.0	218.0	210.0	160.0	134.0											
25	183.0	181.0	182.0	179.0	160.0	129.0	110.0										
30	149.0	146.0	149.0	144.0	134.0	125.0	109.0	91.0	76.0								
35	57.0	126.0	124.0	117.0	114.0	107.0	105.0	89.0	76.0	64.0							
40		104.0	103.0	97.0	96.0	95.0	89.0	84.0	73.0	64.0	54.0	47.0					
45		86.0	86.0	86.0	82.0	81.0	76.0	76.0	68.0	63.0	54.0	47.0	38.0				
50		60.0	75.0	75.0	72.0	71.0	71.0	67.0	63.0	59.0	53.0	47.0	38.0	33.0	28.6	24.2	
55			64.0	64.0	66.0	62.0	63.0	59.0	55.0	54.0	51.0	46.0	38.0	33.0	28.6	24.2	22.0
60			56.0	56.0	58.0	56.0	55.0	52.0	52.0	47.0	46.0	44.0	37.8	33.0	28.6	24.2	22.0
65			49.0	49.0	51.0	52.0	50.0	46.0	47.0	42.0	42.4	41.6	36.8	33.0	28.6	24.2	22.0
70				42.8	45.0	48.0	45.0	41.4	42.0	37.6	39.4	37.2	35.2	32.2	28.6	24.2	22.0
75				37.8	40.2	42.6	40.2	37.2	38.0	34.4	35.4	33.4	32.8	31.2	28.6	24.2	22.0
80				33.6	36.0	38.4	36.4	33.6	34.4	32.8	32.0	30.0	29.6	29.8	27.8	24.2	21.8
85					32.2	34.6	33.0	30.4	31.2	31.0	29.0	27.2	26.8	27.0	27.0	23.4	21.2
90					29.0	31.2	29.8	27.6	28.4	28.8	26.4	24.6	24.2	26.0	25.0	22.6	20.6
95					26.2	28.4	26.8	25.0	26.0	26.4	24.0	22.2	21.8	24.4	22.8	21.8	19.8
100						25.8	24.4	22.4	23.8	24.2	21.8	20.0	19.8	22.2	20.8	20.8	19.2
110						18.0	20.0	18.0	19.6	20.4	18.2	16.4	16.2	18.8	18.6	17.4	17.0
120							16.6	14.6	16.0	16.8	15.0	13.4	13.2	15.8	15.8	14.6	14.2
130								11.6	13.0	13.8	12.2	10.8	10.6	13.2	13.4	12.0	11.8
140								9.2	10.6	11.4	9.6	8.4	8.4	11.0	11.2	10.0	9.6
150									9.0	9.2	7.4	6.2	6.4	9.0	9.4	8.0	7.8
160										7.4	5.6	4.4	4.4	7.2	7.6	6.4	6.2
170											4.2	2.8	2.8	5.6	6.0	5.0	4.8
180														4.2	4.6	3.6	3.4
190														2.8	3.4	2.2	2.0
200															2.2		

THIS CHART IS ONLY A GUIDE AND SHOULD NOT BE USED TO OPERATE THE CRANE.
The individual crane's load chart, operating instructions and other instructional plates must be read and understood prior to operating the crane.

13,4 m – 78,5 m (44 ft – 257.5 ft) | 7,8 m (25.6 ft) | 360° | 40 t (88,100 lb)

Pounds x 1000

Feet	44.0	59.6	75.3	90.9	106.5	121.7	136.4	150.8	163.3	175.8	188.3	199.7	212.9	224.7	236.2	248.2	257.5
10	308.0	286.0	286.0														
15	272.0	270.0	256.0	213.0													
20	219.0	218.0	217.0	210.0	160.0	134.0											
25	179.0	179.0	178.0	165.0	158.0	129.0	110.0										
30	144.0	146.0	142.0	132.0	125.0	120.0	109.0	91.0	76.0								
35	57.0	119.0	114.0	108.0	105.0	104.0	97.0	89.0	76.0	64.0							
40		96.0	94.0	93.0	88.0	87.0	83.0	81.0	73.0	64.0	54.0	47.0					
45		79.0	78.0	79.0	79.0	74.0	74.0	70.0	66.0	63.0	54.0	47.0	38.0				
50		60.0	65.0	68.0	68.0	64.0	65.0	60.0	57.0	55.0	53.0	47.0	38.0	33.0	28.6	24.2	
55			55.0	58.0	59.0	56.0	57.0	53.0	53.0	48.0	48.0	46.0	38.0	33.0	28.6	24.2	21.8
60			47.0	50.0	52.0	49.0	50.0	49.0	47.0	42.4	44.0	41.6	37.8	33.0	28.6	24.2	21.8
65			41.0	43.6	46.0	43.6	45.0	45.0	42.0	38.4	39.2	37.0	36.2	33.0	28.6	24.2	21.8
70				38.2	40.6	38.8	40.0	40.8	37.6	36.4	35.0	33.0	32.4	32.2	28.6	24.2	21.8
75				33.6	36.0	34.6	36.0	36.8	33.8	34.0	31.4	29.4	28.8	29.4	28.6	24.2	21.8
80				29.6	32.0	30.6	32.4	33.4	30.4	30.8	28.2	26.4	25.8	28.2	26.6	24.2	21.6
85					28.4	27.2	29.4	30.4	27.6	28.0	25.4	23.6	23.2	25.6	24.0	23.4	21.0
90					25.6	24.2	26.2	27.8	25.0	25.4	23.0	21.2	20.8	23.4	22.2	21.8	20.4
95					23.0	21.6	23.6	25.2	22.6	23.0	20.8	19.0	18.6	21.2	21.2	19.8	19.0
100						19.2	21.2	22.8	20.6	21.0	18.8	17.0	16.8	19.4	19.4	18.0	17.2
110						15.4	17.2	18.8	16.8	17.6	15.2	13.6	13.4	16.0	16.2	14.8	14.0
120							14.0	15.4	13.4	14.4	12.4	10.8	10.6	13.2	13.4	12.0	11.4
130								12.6	11.0	11.6	9.8	8.4	8.4	10.8	11.0	9.8	9.2
140								7.2	10.0	9.2	7.4	6.2	6.2	8.8	9.0	7.8	7.2
150									9.0	7.2	5.6	4.2	4.4	7.0	7.4	6.0	5.6
160										5.6	3.8	2.6	2.6	5.4	5.8	4.6	4.0
170											2.4			3.8	4.2	3.2	2.8
180														2.4	3.0		

THIS CHART IS ONLY A GUIDE AND SHOULD NOT BE USED TO OPERATE THE CRANE.
The individual crane's load chart, operating instructions and other instructional plates must be read and understood prior to operating the crane.

Load charts

Main boom

13,4 m – 78,5 m (44 ft – 257.5 ft) | 7,8 m (25.6 ft) | 360° | 35,5 t (78,200 lb)

Pounds x 1000

Feet	44.0	59.6	75.3	90.9	106.5	121.7	136.4	150.8	163.3	175.8	188.3	199.7	212.9	224.7	236.2	248.2	257.5
10	308.0	286.0	286.0														
15	270.0	270.0	256.0	213.0													
20	217.0	216.0	214.0	210.0	160.0	134.0											
25	175.0	175.0	168.0	159.0	147.0	129.0	110.0										
30	140.0	140.0	132.0	123.0	120.0	114.0	109.0	91.0	76.0								
35	57.0	110.0	106.0	104.0	97.0	96.0	90.0	89.0	76.0	64.0							
40		89.0	91.0	86.0	85.0	80.0	80.0	75.0	71.0	64.0	54.0	47.0					
45		73.0	75.0	73.0	72.0	71.0	68.0	64.0	60.0	58.0	54.0	47.0	38.0				
50		59.0	63.0	62.0	62.0	63.0	59.0	55.0	55.0	50.0	50.0	47.0	38.0	33.0	28.6	24.2	
55			53.0	53.0	54.0	55.0	52.0	52.0	49.0	43.6	45.0	42.8	38.0	33.0	28.6	24.2	21.8
60			46.0	46.0	48.0	49.0	46.0	46.0	42.8	40.6	39.8	37.6	36.8	33.0	28.6	24.2	21.8
65			39.4	39.4	42.0	43.4	40.4	41.4	38.0	38.2	35.4	33.2	32.6	32.6	28.6	24.2	21.8
70				34.4	36.8	38.8	36.2	37.0	34.0	34.2	31.4	29.4	28.8	30.6	28.6	24.2	21.8
75				30.0	32.4	34.8	32.4	33.4	30.4	30.6	28.0	26.0	25.6	28.0	26.4	24.2	21.8
80				26.4	28.6	31.0	29.0	30.2	27.2	27.6	25.0	23.2	22.8	25.4	24.6	23.6	21.6
85					25.4	27.8	26.2	27.4	24.6	25.0	22.4	20.6	20.4	22.8	22.8	21.2	20.6
90					22.6	25.0	23.4	24.8	22.2	22.6	20.2	18.4	18.0	20.6	20.8	19.2	18.4
95					20.2	22.4	20.8	22.6	20.0	20.4	18.0	16.4	16.0	18.6	18.8	17.2	16.6
100						20.2	18.6	20.2	18.0	18.4	16.2	14.6	14.2	16.8	17	15.6	14.8
110						15.6	15.0	16.4	14.4	15.2	13.0	11.4	11.2	13.8	14.0	12.6	11.8
120							12.0	13.4	12.2	12.2	10.2	8.8	8.6	11.2	11.4	10.0	9.4
130								10.8	11.0	9.6	7.8	6.6	6.4	9.0	9.2	7.8	7.2
140									10.0	7.4	5.8	4.4	4.4	7.0	7.2	6.0	5.4
150									9.0	5.6	3.8	2.6	2.8	5.4	5.6	4.4	3.8
160										4.0	2.2			3.8	4.2	3.0	2.4
170														2.4	2.8		

THIS CHART IS ONLY A GUIDE AND SHOULD NOT BE USED TO OPERATE THE CRANE.
The individual crane's load chart, operating instructions and other instructional plates must be read and understood prior to operating the crane.

13,4 m – 78,5 m (44 ft – 257.5 ft) | 7,8 m (25.6 ft) | 360° | 30.5 t (67,200 lb)

Pounds x 1000

Feet	44.0	59.6	75.3	90.9	106.5	121.7	136.4	150.8	163.3	175.8	188.3	199.7	210.7	224.7	236.2	248.2	257.5
10	308.0	286.0	286.0														
15	268.0	268.0	256.0	213.0													
20	214.0	213.0	213.0	193.0	160.0	134.0											
25	170.0	168.0	159.0	146.0	135.0	129.0	110.0										
30	127.0	129.0	121.0	118.0	110.0	107.0	100.0	91.0	76.0								
35	57.0	102.0	100.0	95.0	93.0	88.0	87.0	81.0	76.0	64.0							
40		80.0	82.0	78.0	77.0	77.0	72.0	67.0	63.0	61.0	54.0	47.0					
45		65.0	68.0	65.0	65.0	66.0	62.0	59.0	58.0	52.0	53.0	47.0	31.6				
50		52.0	56.0	56.0	56.0	57.0	53.0	54.0	50.0	46.0	46.0	43.4	30.4	33.0	28.6	24.2	
55			48.0	48.0	49.0	50.0	46.0	47.0	43.4	43.0	40.2	37.8	29.0	33.0	28.6	24.2	21.8
60			40.6	40.6	42.6	43.8	40.6	41.6	38.2	38.2	35.2	33.0	27.8	32.4	28.6	24.2	21.8
65			34.8	34.8	37.4	38.8	36.0	36.8	33.6	33.8	31.0	29.0	26.4	30.8	28.6	24.2	21.8
70				30.0	32.6	34.6	31.8	33.0	29.8	30.2	27.4	25.4	25.0	27.4	26.4	24.2	21.8
75				26.0	28.4	31.0	28.4	29.6	26.6	26.8	24.4	22.4	23.8	24.6	24.6	22.8	21.8
80				22.8	25.0	27.4	25.4	26.6	23.6	24.0	21.6	19.8	22.2	22.0	22.0	20.4	19.6
85					22.0	24.4	22.8	24.0	21.2	21.6	19.2	17.4	21.0	19.6	19.8	18.2	17.4
90					19.4	21.8	20.2	21.6	19.0	19.4	17.0	15.4	19.8	17.6	17.8	16.2	15.6
95					17.2	19.4	18.0	19.6	17.0	17.4	15.2	13.4	18.8	15.8	16.0	14.4	13.8
100						17.4	15.8	17.4	15.4	15.6	13.4	11.8	17.0	14.2	14.2	12.8	12.2
110						14.0	12.4	14.0	13.8	12.6	10.4	8.8	14.2	11.2	11.4	10.0	9.4
120							9.6	11.0	12.2	10.0	8.0	6.4	11.6	8.8	9.0	7.8	7.2
130								8.6	11.0	7.6	5.8	4.4	9.6	6.8	7.0	5.8	5.2
140									10.0	5.6	3.8	2.6	7.8	5.0	5.4	4.0	3.6
150									8.2	3.8	2.0		6.0	3.6	3.8	2.6	2.0
160										2.4			4.6	2.2	2.6		
170													3.2				
180													2.0				

THIS CHART IS ONLY A GUIDE AND SHOULD NOT BE USED TO OPERATE THE CRANE.
The individual crane's load chart, operating instructions and other instructional plates must be read and understood prior to operating the crane.

Load charts

Main boom

13,4 m – 78,5 m (44 ft – 257.5 ft) | 7,8 m (25.6 ft) | 360° | 26 t (57,300 lb)

Pounds x 1000

Feet	44.0	59.6	75.3	90.9	106.5	121.7	136.4	150.8	163.3	175.8	187.3	199.7	210.7	224.7	236.2	248.2	257.5
10	308.0	286.0	286.0														
15	268.0	266.0	256.0	213.0													
20	212.0	210.0	192.0	178.0	160.0	134.0											
25	165.0	157.0	146.0	135.0	123.0	120.0	110.0										
30	116.0	120.0	114.0	108.0	106.0	98.0	96.0	89.0	76.0								
35	57.0	94.0	91.0	86.0	85.0	84.0	79.0	73.0	69.0	64.0							
40		74.0	74.0	70.0	70.0	70.0	66.0	62.0	61.0	55.0	54.0	47.0					
45		60.0	61.0	59.0	59.0	60.0	56.0	56.0	52.0	48.0	48.0	45.0	31.6				
50		48.0	51.0	50.0	50.0	51.0	48.0	48.0	45.0	44.0	41.2	38.6	30.4	33.0	28.6	24.2	
55			42.4	42.4	43.4	45.0	41.4	42.2	38.6	38.8	35.6	33.4	29.0	32.6	28.6	24.2	21.8
60			36.0	36.0	37.8	39.2	36.2	37.2	33.8	34.0	31.0	29.0	27.8	30.8	28.6	24.2	21.8
65			30.6	30.6	33.2	34.6	31.8	32.8	29.6	30.0	27.2	25.2	26.4	27.2	26.4	24.2	21.8
70				26.2	28.8	30.6	28.0	29.2	26.2	26.4	23.8	22.0	25.0	24.0	24.0	22.4	21.4
75				22.6	25.0	27.4	24.8	26.0	23.0	23.4	21.0	19.2	23.8	21.2	21.4	19.8	19.0
80				19.4	21.8	24.2	22.0	23.2	20.4	20.8	18.4	16.6	22.0	18.8	19.0	17.4	16.6
85				14.8	19.0	21.4	19.6	20.8	18.6	18.6	16.2	14.4	19.8	16.8	16.8	15.4	14.6
90					16.6	18.8	17.4	18.6	17.4	16.6	14.2	12.6	18.0	14.8	15.0	13.6	12.8
95					14.6	16.6	15.2	16.8	16.4	14.6	12.4	10.8	16.2	13.2	13.4	12.0	11.2
100						14.8	13.2	14.8	15.4	13.0	10.8	9.2	14.6	11.6	11.8	10.4	9.8
110						11.6	10.0	11.6	13.8	10.2	8.0	6.6	11.8	9.0	9.2	7.8	7.2
120							7.6	9.0	12.2	7.8	5.8	4.2	9.6	6.8	7.0	5.8	5.2
130								6.8	10.2	5.6	3.8	2.4	7.6	4.8	5.2	3.8	3.4
140									8.2	3.8	2.0		6.0	3.2	3.6	2.2	
150									6.6	2.2			4.4		2.2		
160													3.0				

THIS CHART IS ONLY A GUIDE AND SHOULD NOT BE USED TO OPERATE THE CRANE.
The individual crane's load chart, operating instructions and other instructional plates must be read and understood prior to operating the crane.

13,4 m – 78,5 m (44 ft – 257.5 ft) | 7,8 m (25.6 ft) | 360° | 21 t (46,200 lb)

Pounds x 1000

Feet	44.0	59.6	75.3	90.9	106.5	121.7	136.4	150.8	163.3	175.8	187.3	199.7	210.7	226.4	236.2	248.2	257.5
10	308.0	286.0	286.0														
15	266.0	264.0	256.0	213.0													
20	208.0	196.0	182.0	168.0	151.0	134.0											
25	148.0	143.0	132.0	127.0	117.0	113.0	104.0										
30	103.0	108.0	103.0	96.0	94.0	93.0	86.0	80.0	74.0								
35	57.0	84.0	81.0	76.0	79.0	75.0	70.0	65.0	64.0	58.0							
40		66.0	66.0	62.0	66.0	63.0	58.0	58.0	54.0	51.0	49.0	46.0					
45		54.0	54.0	51.0	56.0	53.0	49.0	50.0	45.0	45.0	41.8	39.0	31.6				
50		40.4	44.0	43.2	48.0	45.0	41.8	42.6	38.8	38.8	35.6	33.2	30.4	28.0	28.6	24.2	
55			36.8	36.8	41.6	39.2	36.0	37.0	33.6	33.6	30.6	28.4	29.0	27.8	28.2	24.2	21.8
60			31.0	30.8	36.4	34.0	31.2	32.4	29.0	29.2	26.4	24.4	27.8	26.8	26.2	24.2	21.8
65			26.0	26.0	32.0	29.8	27.2	28.4	25.2	25.6	23.0	21.0	26.4	24.6	23.0	21.2	20.4
70				22.0	27.8	26.4	23.8	25.0	22.0	22.4	20.0	18.0	23.4	21.8	20.2	18.6	17.8
75				18.6	24.2	23.4	21.0	22.2	19.2	19.8	17.2	15.4	21.0	19.2	17.8	16.2	15.4
80				15.8	21.4	20.6	18.4	19.6	16.8	17.4	15.0	13.2	18.6	17.0	15.6	14.2	13.4
85					18.8	18.0	16.2	17.4	14.8	15.2	13.0	11.2	16.6	15.0	13.8	12.2	11.6
90					16.6	15.6	14.2	15.4	12.8	13.4	11.2	9.4	14.8	13.4	12.0	10.6	10.0
95					14.6	13.8	12.2	13.6	11.2	11.8	9.4	7.8	13.2	11.8	10.6	9.2	8.4
100						12.0	10.4	12.0	9.6	10.2	8.0	6.4	11.8	10.4	9.2	7.8	7.2
110						9.2	7.6	9.0	7.0	7.6	5.6	4.0	9.4	8.0	6.8	5.4	4.8
120							5.2	6.6	4.6	5.6	3.4		7.2	5.8	4.8	3.4	2.8
130								4.6	2.6	3.6			5.4	4.2	3.0		
140													4.0	2.6			
150													2.6				

THIS CHART IS ONLY A GUIDE AND SHOULD NOT BE USED TO OPERATE THE CRANE.
The individual crane's load chart, operating instructions and other instructional plates must be read and understood prior to operating the crane.

Load charts

Main boom

13,4 m – 78,5 m (44 ft – 257.5 ft) | 7,8 m (25.6 ft) | 360° | 16,5 t (36,300 lb)

Pounds x 1000

Feet	44.0	59.6	75.2	90.9	106.1	121.7	135.2	146.7	162.3	172.3	184.1	195.1	210.7	226.4	235.7	248.2	257.5
10	308.0	286.0	286														
15	264.0	262.0	256	213.0													
20	200.0	184.0	168	152.0	144.0	130.0											
25	133.0	129.0	124	114.0	111.0	103.0	99.0										
30	91.0	98.0	92	86.0	88.0	83.0	77.0	68.0	66.0								
35	57.0	74.0	72	68.0	72.0	67.0	62.0	62.0	57.0	54.0							
40		59.0	58	54.0	59.0	55.0	51.0	52.0	47.0	47.0	46.0	34.2					
45		47.0	47	45.0	50.0	47.0	43.0	43.8	39.8	40.0	40.2	32.6	31.6				
50		37.4	38.4	37.4	42.2	39.6	36.4	37.4	33.6	34.2	34.4	31.0	30.4	28.0	26.4	24.2	
55			31.8	31.4	36.4	34.0	31.2	32.2	28.8	29.4	29.8	29.4	29.0	27.4	25.8	23.8	21.8
60			26.4	26.2	31.6	29.6	26.8	28.0	24.8	25.4	25.8	27.6	25.8	23.8	22.4	20.6	19.6
65			21.8	21.8	27.6	25.6	23.2	24.4	21.4	22.0	22.6	24.4	22.6	20.8	19.4	17.6	16.8
70				18.2	24.0	22.4	20.0	21.2	18.4	19.2	19.8	21.6	20.0	18.2	16.8	15.2	14.4
75				15.2	20.8	19.6	17.4	18.6	15.8	16.6	17.2	19.2	17.6	16.0	14.6	13.0	12.4
80				12.6	18.0	17.2	15.0	16.4	13.6	14.4	15.2	17.0	15.6	14.0	12.6	11.2	10.4
85					15.6	14.8	13.0	14.2	11.6	12.6	13.2	15.2	13.8	12.2	11	9.4	8.8
90					13.6	12.8	11.2	12.6	10.0	10.8	11.6	13.4	12.2	10.6	9.4	8.0	7.2
95					11.8	11.0	9.6	11.0	8.4	9.4	10.0	12.0	10.6	9.2	8	6.6	6.0
100						9.4	8.0	9.6	7.0	8.0	8.6	10.6	9.4	7.8	6.6	5.4	4.8
110						6.8	5.2	6.8	4.6	5.6	6.4	8.2	7.0	5.6	4.6	3.2	2.6
120							3.2	4.6	2.6	3.6	4.4	6.2	5.2	3.8	2.6		
130								2.8			2.8	4.6	3.6	2.2			
140												3.2	2.2				

THIS CHART IS ONLY A GUIDE AND SHOULD NOT BE USED TO OPERATE THE CRANE.
The individual crane's load chart, operating instructions and other instructional plates must be read and understood prior to operating the crane.

13,4 m – 78,5 m (44 ft – 257.5 ft) | 7,8 m (25.6 ft) | 360° | 7 t (15,400 lb)

Pounds x 1000

Feet	44.0	59.6	75.3	90.9	105.2	119.5	135.2	146.7	162.3	172.3	184.8	195.1	210.7	226.4	235.7
10	308.0	286.0	286.0												
15	254.0	248.0	214.0	191.0											
20	161.0	146.0	137.0	123.0	117.0	112.0									
25	100.0	102.0	94.0	86.0	84.0	82.0	75.0								
30	67.0	73.0	68.0	63.0	63.0	63.0	57.0	57.0	52.0						
35	47.0	56.0	52.0	49.0	49.0	50.0	46.0	46.0	41.4	41.4					
40		42.8	41.0	38.6	39.4	40.6	36.8	37.6	33.6	34.0	31.6	34.2			
45		33.4	33.0	30.8	32.0	33.4	30.2	31.2	27.6	28.0	26.0	30.2	28.0		
50		25.2	26.2	25.0	26.4	28.0	25.0	26.2	22.8	23.4	21.6	25.6	23.6	21.6	20.0
55			20.8	20.2	21.8	23.4	20.8	22.0	18.8	19.6	17.8	22.0	20.2	18.2	16.8
60			16.6	16.4	18.0	19.8	17.4	18.6	15.6	16.4	14.8	19.0	17.2	15.4	14.0
65			13.0	13.0	15.0	16.8	14.4	15.6	12.8	13.8	12.2	16.2	14.8	13.0	11.6
70				10.0	12.4	14.2	12.0	13.2	10.6	11.4	10.0	14.0	12.6	11.0	9.6
75				7.6	10.0	12.0	9.8	11.2	8.6	9.4	8.0	12.0	10.6	9.2	7.8
80				5.6	7.8	10.0	8.0	9.4	6.8	7.6	6.4	10.4	9.0	7.6	6.2
85					6.0	8.4	6.4	7.8	5.2	6.2	4.8	8.8	7.6	6.0	4.8
90					4.4	6.8	5.0	6.2	3.8	4.8	3.6	7.6	6.2	4.8	3.6
95					3.0	5.2	3.6	5.0	2.6	3.6	2.4	6.4	5.0	3.6	2.6
100						4.0	2.6	3.8		2.4		5.2	4.0	2.6	
110						2.0						3.4	2.2		

THIS CHART IS ONLY A GUIDE AND SHOULD NOT BE USED TO OPERATE THE CRANE.
The individual crane's load chart, operating instructions and other instructional plates must be read and understood prior to operating the crane.

Load charts

Main boom

13,4 m – 78,5 m (44 ft – 257.5 ft) | 7,8 m (25.6 ft) | 360° | 0 t (0 lb)

Pounds x 1000

Feet	44.0	59.6	75.2	90.4	103.9	119.5	129.5	146.7	157.7	172.3	184.1	195.1	210.7
10	308.0	286.0	286.0										
15	244.0	213.0	182.0	163.0									
20	127.0	120.0	108.0	97.0	99.0	89.0	56.0						
25	77.0	79.0	72.0	66.0	70.0	64.0	51.0						
30	50.0	57.0	52.0	48.0	53.0	48.0	46.0	44.0	46.0				
35	33.4	42.2	38.6	35.8	41.2	37.8	41.2	34.6	38.2	30.8			
40		31.4	29.4	27.4	32.8	30.0	34.4	27.8	31.4	24.6	24.8	26.6	
45		23.6	22.8	21.0	26.6	24.2	28.6	22.4	26.2	19.8	20.2	22.0	20.0
50		14.2	17.8	16.2	21.6	19.6	24.0	18.2	22.0	15.8	16.4	18.4	16.6
55			13.2	12.4	17.8	16.0	20.4	14.8	18.6	12.8	13.4	15.4	13.6
60			9.8	9.4	14.6	13.0	17.2	12.0	15.8	10.0	10.8	12.8	11.2
65			6.8	6.8	12.0	10.4	14.8	9.6	13.4	7.8	8.6	10.6	9.2
70			6.4	4.4	9.8	8.4	12.6	7.6	11.4	6.0	6.8	8.8	7.4
75				2.4	8.0	6.6	10.8	6.0	9.6	4.4	5.2	7.2	5.8
80					6.2	5.0	9.2	4.4	8.0	3.0	3.8	5.8	4.4
85					4.6	3.6	7.6	3.0	6.6		2.4	4.4	3.2
90					3.2	2.4	6.4		5.6			3.4	2.2
95					2.2		5.4		4.4			2.4	
100							4.4		3.4				
110							2.4						

THIS CHART IS ONLY A GUIDE AND SHOULD NOT BE USED TO OPERATE THE CRANE.
The individual crane's load chart, operating instructions and other instructional plates must be read and understood prior to operating the crane.

46m - 78.5 m (150.8 ft -257.5 ft) | 11,2 m (36.7 ft) | 7,8 m (25.6 ft) | 360° | 80 t (176,000 lb)

Pounds x 1000

Feet	150.8				200.8				236.2				257.5			
	5.9 + 30.8				5.9 + 30.8				5.9 + 30.8				5.9 + 30.8			
	0°	*0°-15°	*15°-30°	*30°-50°	0°	*0°-15°	*15°-30°	*30°-50°	0°	*0°-15°	*15°-30°	*30°-50°	0°	*0°-15°	*15°-30°	*30°-50°
30.0	37.4															
35.0	37.4															
40.0	36.4	31.4														
45.0	35.4	30.4			24.0											
50.0	34.2	29.6	24.8		24.0											
55.0	33.4	28.8	24.2	19.0	24.0				14.8				11.0			
60.0	32.4	28.0	23.2	18.6	24.0	24.0	21.4		14.8				11.0			
65.0	31.4	27.2	22.4	18.2	24.0	23.8	21.0		14.8				11.0			
70.0	30.4	26.4	21.6	18.0	24.0	23.4	20.8	18.4	14.8	14.8			11.0			
75.0	29.2	25.6	21.2	17.6	24.0	22.8	20.6	18.0	14.8	14.8	14.8		11.0	11.0		
80.0	28.0	24.6	20.6	17.4	24.0	22.6	20.2	17.8	14.8	14.8	14.8	14.8	11.0	11.0	11.0	11.0
85.0	26.8	23.6	20.0	17.2	24.0	22.2	20.0	17.6	14.8	14.8	14.8	14.8	11.0	11.0	11.0	11.0
90.0	25.4	22.4	19.6	17.0	24.0	21.8	19.8	17.4	14.8	14.8	14.8	14.8	11.0	11.0	11.0	11.0
95.0	24.2	21.6	19.2	16.8	23.4	21.6	19.4	17.2	14.8	14.8	14.8	14.8	11.0	11.0	11.0	11.0
100.0	23.2	20.8	18.8	16.8	23.0	21.2	19.2	17.2	14.8	14.8	14.8	14.8	11.0	11.0	11.0	11.0
105.0	22.0	20.0	18.4	16.6	22.2	21.0	19.0	17.0	14.8	14.8	14.8	14.8	11.0	11.0	11.0	11.0
110.0	21.2	19.4	18.0	16.6	21.2	20.4	18.8	16.8	14.8	14.8	14.8	14.8	11.0	11.0	11.0	11.0
115.0	20.4	18.8	17.8	16.4	20.4	19.8	18.6	16.8	14.8	14.8	14.8	14.8	11.0	11.0	11.0	11.0
120.0	19.6	18.2	17.4	16.4	19.4	19.2	18.4	16.6	14.8	14.8	14.6	14.6	11.0	11.0	11.0	11.0
125.0	19.0	17.8	17.0	16.4	18.4	18.4	18.2	16.6	14.8	14.4	14.2	14.2	11.0	11.0	11.0	11.0
130.0	18.4	17.2	16.8	16.4	17.6	17.6	17.4	16.4	14.2	14.0	13.8	13.8	11.0	11.0	11.0	11.0
135.0	17.8	16.8	16.4		16.6	16.6	16.6	16.2	13.8	13.6	13.4	13.4	11.0	11.0	11.0	11.0
140.0	17.2	16.4	16.0		15.8	15.8	15.8	15.8	13.4	13.2	13.0	13.0	10.6	10.6	10.6	10.6
145.0	16.6	16.0	15.8		14.8	14.8	14.8	14.8	12.8	12.6	12.6	12.6	10.2	10.2	10.2	10.2
150.0	16.2	15.6	15.6		14.0	14.0	14.0	14.0	12.4	12.2	12.2	12.2	9.8	9.8	9.8	9.8
155.0	15.8	15.2	15.2		13.2	13.2	13.2	13.2	11.8	11.8	11.8	11.8	9.4	9.4	9.4	9.4
160.0	15.4	15.0	15.0		12.4	12.4	12.4	12.4	11.4	11.4	11.4	11.4	9.2	9.2	9.2	9.2
165.0	15.0	14.8	14.8		11.8	11.8	11.8	11.8	11.0	11.0	11.0	11.0	8.8	8.8	8.8	8.8
170.0	14.4				11.2	11.2	11.2	11.2	10.6	10.6	10.6	10.6	8.4	8.4	8.4	8.4
175.0	7.4				10.4	10.4	10.4		10.2	10.2	10.2	10.2	8.0	8.0	8.0	8.0
180.0					9.8	9.8	9.8		9.8	9.8	9.8	9.8	7.6	7.6	7.6	7.6
185.0					9.4	9.4	9.4		9.4	9.4	9.4	9.4	7.0	7.0	7.0	7.0
190.0					8.8	8.8	8.8		9.0	9.0	9.0	9.0	6.6	6.6	6.6	6.6
195.0					8.2	8.2	8.2		8.4	8.4	8.4	8.4	6.2	6.2	6.2	6.2
200.0					7.8	7.8	7.8		8.0	8.0	8.0		5.8	5.8	5.8	5.8
205.0					7.2	7.2	7.2		7.6	7.6	7.6		5.4	5.4	5.4	5.4
210.0					6.6	6.6			7.0	7.0	7.0		5.0	5.0	5.0	
215.0					6.0	6.0			6.6	6.6	6.6		4.6	4.6	4.6	
220.0					3.8				6.2	6.2	6.2		4.2	4.2	4.2	
225.0									5.8	5.8	5.8		4.0	4.0	4.0	
230.0									5.4	5.4	5.4		3.6	3.6	3.6	
235.0									4.8	4.8	5.0		3.2	3.2	3.2	
240.0									4.2	4.2	4.4		3.0	3.0	3.0	
245.0									3.8	3.8			2.6	2.6	2.6	
250.0									3.4	3.4			2.4	2.4	2.4	
255.0													2.0	2.0	2.0	

** Luffing under load*

THIS CHART IS ONLY A GUIDE AND SHOULD NOT BE USED TO OPERATE THE CRANE.
The individual crane's load chart, operating instructions and other instructional plates must be read and understood prior to operating the crane

Load charts

Main boom and bi-fold swingaway

46m - 78.5 m (150.8 ft -257.5 ft)

17.8 m (58.4 ft)

7,8 m (25.6 ft)

360°

80 t (176,000 lb)

Pounds x 1000

Feet	150.8				200.8				236.2				257.5			
	5.9 + 52.5				5.9 + 52.5				5.9 + 52.5				5.9 + 52.5			
	0°	*0°-15°	*15°-30°	*30°-50°	0°	*0°-15°	*15°-30°	*30°-50°	0°	*0°-15°	*15°-30°	*30°-50°	0°	*0°-15°	*15°-30°	*30°-50°
35.0	17.0															
40.0	17.0															
45.0	17.0															
50.0	16.8	14.2			13.8											
55.0	16.4	14.0			13.8											
60.0	16.0	13.6			13.8				9.8							
65.0	15.6	13.4			13.8				9.8							
70.0	15.2	13.2	11.6		13.8	12.4			9.8				8.0			
75.0	15.0	12.8	11.4	9.6	13.8	12.2			9.8	9.8			8.0			
80.0	14.6	12.6	11.2	9.4	13.6	12.2	10.8		9.8	9.8			8.0			
85.0	14.2	12.4	11.0	9.2	13.4	12.0	10.8		9.8	9.8			8.0			
90.0	14.0	12.2	10.8	9.0	13.2	11.8	10.6	9.2	9.8	9.8			8.0	8.0		
95.0	13.6	12.0	10.4	9.0	13.0	11.6	10.6	9.2	9.8	9.8	9.8		8.0	8.0		
100.0	13.4	11.8	10.2	8.8	12.8	11.4	10.4	9.0	9.8	9.8	9.6	9.0	8.0	8.0	8.0	
105.0	13.0	11.6	10.0	8.8	12.6	11.4	10.4	9.0	9.8	9.8	9.6	9.0	8.0	8.0	8.0	
110.0	12.8	11.4	9.8	8.6	12.4	11.2	10.2	8.8	9.8	9.8	9.6	8.8	8.0	8.0	8.0	
115.0	12.6	11.2	9.6	8.6	12.4	11.0	10.2	8.8	9.8	9.8	9.6	8.8	8.0	8.0	8.0	8.0
120.0	12.2	11.0	9.4	8.6	12.2	11.0	10.0	8.8	9.8	9.8	9.4	8.8	8.0	8.0	8.0	8.0
125.0	12.0	10.6	9.4	8.4	12.0	10.8	9.8	8.6	9.8	9.8	9.4	8.6	8.0	8.0	8.0	8.0
130.0	11.8	10.4	9.2	8.4	11.8	10.6	9.6	8.6	9.8	9.8	9.4	8.6	8.0	8.0	8.0	8.0
135.0	11.6	10.2	9.0	8.4	11.6	10.6	9.6	8.6	9.8	9.8	9.2	8.6	8.0	8.0	8.0	8.0
140.0	11.2	10.0	8.8	8.4	11.6	10.4	9.4	8.6	9.8	9.8	9.2	8.6	8.0	8.0	8.0	8.0
145.0	11.0	9.8	8.8	8.4	11.4	10.4	9.2	8.4	9.8	9.6	9.2	8.6	8.0	8.0	8.0	8.0
150.0	10.6	9.6	8.6	8.4	11.2	10.2	9.2	8.4	9.8	9.6	9.0	8.4	8.0	8.0	8.0	8.0
155.0	10.2	9.4	8.6	8.4	11.0	10.2	9.0	8.4	9.8	9.6	9.0	8.4	8.0	8.0	8.0	8.0
160.0	10.0	9.2	8.4		11.0	10.0	9.0	8.4	9.8	9.4	9.0	8.4	8.0	8.0	8.0	8.0
165.0	9.8	9.0	8.4		10.8	9.8	8.8	8.4	9.8	9.4	8.8	8.4	8.0	8.0	8.0	8.0
170.0	9.4	8.8	8.4		10.6	9.6	8.8	8.4	9.6	9.2	8.8	8.4	7.8	7.8	7.8	7.8
175.0	9.2	8.8	8.4		10.4	9.6	8.6	8.4	9.4	9.0	8.8	8.4	7.6	7.6	7.6	7.6
180.0	9.0	8.6	8.4		10.2	9.4	8.6	8.4	9.0	8.8	8.6	8.4	7.2	7.2	7.2	7.2
185.0	8.8	8.6			9.8	9.2	8.6	8.4	8.8	8.6	8.6	8.4	7.0	7.0	7.0	7.0
190.0	8.6				9.2	9.0	8.4	8.4	8.6	8.4	8.4	8.2	6.8	6.8	6.8	6.8
195.0	8.4				8.8	8.8	8.4		8.2	8.2	8.2	8.2	6.4	6.4	6.4	6.4
200.0	5.0				8.2	8.2	8.2		8.0	7.8	7.8	7.8	6.0	6.0	6.0	6.0
205.0					7.8	7.8	7.8		7.6	7.6	7.6	7.6	5.8	5.8	5.8	5.8
210.0					7.4	7.4	7.4		7.2	7.2	7.2	7.2	5.4	5.4	5.4	5.4
215.0					6.8	6.8	6.8		7.0	7.0	7.0	7.0	5.0	5.0	5.0	5.0
220.0					6.4	6.4	6.4		6.6	6.6	6.6		4.6	4.6	4.6	4.6
225.0					6.0	6.0	6.0		6.2	6.2	6.2		4.4	4.4	4.4	4.4
230.0					5.6	5.6			5.8	5.8	5.8		4.0	4.0	4.0	4.0
235.0					5.0	5.0			5.4	5.4	5.4		3.6	3.6	3.6	3.6
240.0					4.6				5.2	5.2	5.2		3.4	3.4	3.4	
245.0									4.8	4.8	4.8		3.0	3.0	3.0	
250.0									4.4	4.4	4.4		2.8	2.8	2.8	
255.0									4.0	4.0	4.2		2.4	2.4	2.4	
260.0									3.6	3.6	3.8		2.2	2.2	2.2	
265.0									3.2	3.2						
270.0									2.6	2.6						
275.0									2.2							

** Luffing under load*

THIS CHART IS ONLY A GUIDE AND SHOULD NOT BE USED TO OPERATE THE CRANE.
The individual crane's load chart, operating instructions and other instructional plates must be read and understood prior to operating the crane

Load charts

Main boom and bi-fold swingaway

46m - 78.5 m (150.8 ft -257.5 ft)

11,2 m (36.7 ft)

7,8 m (25.6 ft)

360°

50 t (110,200 lb)

Pounds x 1000

Feet	150.8				200.8 - 201.4				229.5 - 236.2				257.5			
	5.9 + 30.8				5.9 + 30.8				5.9 + 30.8				5.9 + 30.8			
	0°	*0°-15°	*15°-30°	*30°-50°	0°	*0°-15°	*15°-30°	*30°-50°	0°	*0°-15°	*15°-30°	*30°-50°	0°	*0°-15°	*15°-30°	*30°-50°
30.0	37.4															
35.0	37.4															
40.0	36.4	31.4														
45.0	35.4	30.4			24.0											
50.0	34.2	29.6	24.8		24.0				14.8							
55.0	33.4	28.8	24.2	19.0	24.0				14.8				11.0			
60.0	32.4	28.0	23.2	18.6	24.0	24.0	21.4		14.8				11.0			
65.0	31.4	27.2	22.4	18.2	24.0	23.8	21.0		14.8				11.0			
70.0	30.4	26.4	21.6	18.0	24.0	23.4	20.8	18.4	14.8	14.8			11.0			
75.0	29.2	25.6	21.2	17.6	24.0	22.8	20.6	18.0	14.8	14.8	14.8		11.0	11.0		
80.0	28.0	24.6	20.6	17.4	24.0	22.6	20.2	17.8	14.8	14.8	14.8	14.8	11.0	11.0	11.0	11.0
85.0	26.8	23.6	20.0	17.2	24.0	22.2	20.0	17.6	14.8	14.8	14.8	14.8	11.0	11.0	11.0	11.0
90.0	25.4	22.4	19.6	17.0	24.0	21.8	19.8	17.4	14.8	14.8	14.8	14.8	11.0	11.0	11.0	11.0
95.0	24.2	21.6	19.2	16.8	23.0	21.6	19.4	17.2	14.8	14.8	14.8	14.8	11.0	11.0	11.0	11.0
100.0	23.2	20.8	18.8	16.8	21.0	21.0	19.2	17.2	14.8	14.8	14.8	14.8	11.0	11.0	11.0	11.0
105.0	22.0	20.0	18.4	16.6	19.0	19.0	19.0	17.0	14.8	14.8	14.8	14.8	11.0	11.0	11.0	11.0
110.0	21.2	19.4	18.0	16.6	17.4	17.4	18.4	16.8	14.8	14.8	14.8	14.8	11.0	11.0	11.0	11.0
115.0	19.6	18.8	17.8	16.4	15.6	15.6	16.6	16.8	14.8	14.8	14.8	14.8	11.0	11.0	11.0	11.0
120.0	18.0	18.0	17.4	16.4	14.2	14.2	15.2	16.0	13.6	14.8	14.6	14.6	11.0	11.0	11.0	11.0
125.0	16.4	16.4	17.0	16.4	13.0	12.8	13.8	14.4	13.8	13.6	14.2	14.2	11.0	11.0	11.0	11.0
130.0	14.8	14.8	15.6	16.0	12.4	12.4	12.4	13.0	13.4	13.0	13.2	13.8	11.0	11.0	11.0	11.0
135.0	13.6	13.6	14.0		12.0	11.8	11.6	11.8	12.6	12.6	12.2	12.6	10.6	10.6	11.0	11.0
140.0	12.2	12.2	12.8		11.4	11.4	11.2	11.2	11.6	11.6	11.8	11.8	9.6	9.6	10.4	10.6
145.0	11.0	11.0	11.6		11.0	11.0	10.8	10.8	10.6	10.6	11.2	11.6	8.6	8.6	9.2	9.8
150.0	10.0	10.0	10.4		10.6	10.4	10.4	10.4	9.6	9.6	10.2	10.8	7.6	7.6	8.4	9.0
155.0	9.0	9.0	9.4		10.0	10.0	10.0	10.0	8.8	8.8	9.4	9.8	6.8	6.8	7.4	8.0
160.0	8.0	8.0	8.4		9.6	9.6	9.6	9.6	8.0	8.0	8.6	9.0	6.0	6.0	6.6	7.2
165.0	7.2	7.2	7.4		9.2	9.2	9.2	9.2	7.2	7.2	7.8	8.2	5.2	5.2	5.8	6.4
170.0	6.4				8.8	8.8	8.8	8.8	6.6	6.6	7.0	7.4	4.6	4.6	5.2	5.6
175.0	5.8				8.0	8.0	8.4		5.8	5.8	6.2	6.6	4.0	4.0	4.4	4.8
180.0					7.4	7.4	7.6		5.0	5.0	5.6	5.8	3.4	3.4	3.8	4.2
185.0					6.6	6.6	7.0		4.4	4.4	4.8	5.2	2.8	2.8	3.2	3.6
190.0					6.0	6.0	6.2		3.8	3.8	4.2	4.4	2.2	2.2	2.6	3.0
195.0					5.4	5.4	5.6		3.2	3.2	3.6				2.0	2.4
200.0					4.8	4.8	5.0		2.6	2.6	2.8					
205.0					4.2	4.2	4.4		2.0	2.0	2.4					
210.0					3.8	3.8										
215.0					3.2	3.2										

THIS CHART IS ONLY A GUIDE AND SHOULD NOT BE USED TO OPERATE THE CRANE.
The individual crane's load chart, operating instructions and other instructional plates must be read and understood prior to operating the crane

Load charts

Main boom and bi-fold swingaway

46m - 78.5 m (150.8 ft -257.5 ft)

17.8 m (58.4 ft)

7,8 m (25.6 ft)

360°

50 t (110,200 lb)

Pounds x 1000

Feet	150.8				200.8 - 201.4				229.5				257.5			
	5.9 + 52.5				5.9 + 52.5				5.9 + 52.5				5.9 + 52.5			
	0°	*0°-15°	*15°-30°	*30°-50°	0°	*0°-15°	*15°-30°	*30°-50°	0°	*0°-15°	*15°-30°	*30°-50°	0°	*0°-15°	*15°-30°	*30°-50°
35.0	17.0															
40.0	17.0															
45.0	17.0															
50.0	16.8	14.2			13.8											
55.0	16.4	14.0			13.8				10.0							
60.0	16.0	13.6			13.8				10.0							
65.0	15.6	13.4			13.8				10.0							
70.0	15.2	13.2	11.6		13.8	12.4			10.0				8.0			
75.0	15.0	12.8	11.4	9.6	13.8	12.2			10.0	10.0			8.0			
80.0	14.6	12.6	11.2	9.4	13.6	12.2	10.8		10.0	10.0			8.0			
85.0	14.2	12.4	11.0	9.2	13.4	12.0	10.8		10.0	10.0			8.0			
90.0	14.0	12.2	10.8	9.0	13.2	11.8	10.6	9.2	10.0	10.0	9.8		8.0	8.0		
95.0	13.6	12.0	10.4	9.0	13.0	11.6	10.6	9.2	10.0	10.0	9.8		8.0	8.0		
100.0	13.4	11.8	10.2	8.8	12.8	11.4	10.4	9.0	10.0	10.0	9.6	9.0	8.0	8.0	8.0	
105.0	13.0	11.6	10.0	8.8	12.6	11.4	10.4	9.0	10.0	10.0	9.6	9.0	8.0	8.0	8.0	
110.0	12.8	11.4	9.8	8.6	12.4	11.2	10.2	8.8	10.0	10.0	9.6	8.8	8.0	8.0	8.0	
115.0	12.6	11.2	9.6	8.6	12.4	11.0	10.2	8.8	10.0	10.0	9.4	8.8	8.0	8.0	8.0	8.0
120.0	12.2	11.0	9.4	8.6	12.2	11.0	10.0	8.8	10.0	10.0	9.4	8.8	8.0	8.0	8.0	8.0
125.0	12.0	10.6	9.4	8.4	12.0	10.8	9.8	8.6	10.0	9.8	9.4	8.6	8.0	8.0	8.0	8.0
130.0	11.8	10.4	9.2	8.4	11.8	10.6	9.6	8.6	10.0	9.8	9.2	8.6	8.0	8.0	8.0	8.0
135.0	11.6	10.2	9.0	8.4	11.6	10.6	9.6	8.6	10.0	9.6	9.0	8.6	8.0	8.0	8.0	8.0
140.0	11.2	10.0	8.8	8.4	10.8	10.4	9.4	8.6	10.0	9.4	8.8	8.4	8.0	8.0	8.0	8.0
145.0	11.0	9.8	8.8	8.4	9.8	9.8	9.2	8.4	10.0	9.2	8.6	8.4	8.0	8.0	8.0	8.0
150.0	10.6	9.6	8.6	8.4	9.2	8.8	9.2	8.4	9.8	9.0	8.4	8.4	8.0	8.0	8.0	8.0
155.0	10.2	9.4	8.6	8.4	9.0	8.4	9.0	8.4	9.6	8.8	8.4	8.2	7.8	7.8	8.0	8.0
160.0	10.0	9.2	8.4		8.8	8.2	8.2	8.4	9.0	8.6	8.2	8.0	7.0	7.0	8.0	8.0
165.0	9.0	9.0	8.4		8.4	8.0	7.8	8.2	8.2	8.2	8.0	8.0	6.4	6.4	7.4	8.0
170.0	8.2	8.2	8.4		8.2	7.8	7.6	7.6	7.6	7.6	7.8	7.8	5.6	5.6	6.6	7.6
175.0	7.4	7.4	8.0		8.0	7.6	7.4	7.4	6.8	6.8	7.8	7.8	5.0	5.0	6.0	6.8
180.0	6.8	6.8	7.2		7.6	7.4	7.2	7.2	6.2	6.2	7.0	7.6	4.4	4.4	5.4	6.0
185.0	6.0	6.0			7.4	7.2	7.2	7.2	5.6	5.6	6.4	7.0	3.8	3.8	4.6	5.4
190.0	5.4				7.0	7.0	7.0	7.0	5.0	5.0	5.8	6.4	3.2	3.2	4.0	4.8
195.0	4.8				6.6	6.6	6.8		4.4	4.4	5.2	5.8	2.6	2.6	3.4	4.2
200.0	4.2				6.0	6.0	6.4		3.8	3.8	4.6	5.0	2.2	2.2	3.0	3.6
205.0					5.4	5.4	6.0		3.2	3.2	4.0	4.4			2.4	3.0
210.0					4.8	4.8	5.4		2.8	2.8	3.4					2.4
215.0					4.4	4.4	4.8		2.2	2.2	2.8					
220.0					3.8	3.8	4.2				2.4					
225.0					3.4	3.4	3.8									
230.0					3.0	3.0										
235.0					2.6	2.6										
240.0					2.2											

THIS CHART IS ONLY A GUIDE AND SHOULD NOT BE USED TO OPERATE THE CRANE.
The individual crane's load chart, operating instructions and other instructional plates must be read and understood prior to operating the crane

46m - 78.5 m (150.8 ft -257.5 ft)

11,2 m (36.7ft)

7,8 m (25.6 ft)

360°

35.5 t (78,200 lb)

Pounds x 1000

Feet	150.8 - 151.8				200.8 - 201.4				229.5 - 236.2				257.5			
	5.9 + 30.8				5.9 + 30.8				5.9 + 30.8				5.9 + 30.8			
	0°	*0°-15°	*15°-30°	*30°-50°	0°	*0°-15°	*15°-30°	*30°-50°	0°	*0°-15°	*15°-30°	*30°-50°	0°	*0°-15°	*15°-30°	*30°-50°
30.0	37.4															
35.0	37.4															
40.0	36.4	31.4														
45.0	35.4	30.4			24.0											
50.0	34.2	29.6	24.8		24.0											
55.0	33.4	28.8	24.2	19.0	24.0				14.8				11.0			
60.0	32.4	28.0	23.2	18.6	24.0	24.0	21.4		14.8				11.0			
65.0	31.4	27.2	22.4	18.2	24.0	23.8	21.0		14.8				11.0			
70.0	30.4	26.4	21.6	18.0	24.0	23.4	20.8	18.4	14.8	14.8			11.0			
75.0	29.0	25.6	21.2	17.6	24.0	22.8	20.6	18.0	14.8	14.8	14.8		11.0	11.0		
80.0	26.0	24.6	20.6	17.4	21.4	21.4	20.2	17.8	14.8	14.8	14.8	14.8	11.0	11.0	11.0	11.0
85.0	23.4	23.4	20.0	17.2	19.0	19.0	20.0	17.6	14.8	14.8	14.8	14.8	11.0	11.0	11.0	11.0
90.0	21.2	21.2	19.6	17.0	17.0	16.8	18.2	17.4	14.8	14.8	14.8	14.8	11.0	11.0	11.0	11.0
95.0	19.0	19.0	19.2	16.8	16.6	15.8	16.2	17.2	14.8	14.8	14.8	14.8	11.0	11.0	11.0	11.0
100.0	17.2	17.2	18.2	16.8	16.0	15.2	14.4	15.4	14.4	14.4	14.8	14.8	11.0	11.0	11.0	11.0
105.0	15.4	15.4	16.4	16.6	15.4	14.6	14.0	13.6	13.8	13.8	14.4	14.2	11.0	11.0	11.0	11.0
110.0	14.0	14.0	14.8	15.4	14.8	14.2	13.6	13.2	12.4	12.4	13.4	13.6	10.2	10.2	11.0	11.0
115.0	12.6	12.6	13.4	14.0	14.0	13.6	13.2	13.0	11.0	11.0	12.0	12.8	9.0	9.0	10.0	10.8
120.0	11.2	11.6	12.0	12.6	12.8	12.8	12.8	12.6	9.8	9.8	10.8	11.4	7.8	7.8	8.8	9.6
125.0	11.0	11.0	11.0	11.2	11.6	11.6	12.4	12.4	8.8	8.8	9.6	10.2	6.8	6.8	7.6	8.4
130.0	10.4	10.4	10.4	10.4	10.6	10.6	11.2	11.8	7.8	7.8	8.6	9.2	5.8	5.8	6.6	7.2
135.0	9.8	9.8	9.8		9.6	9.6	10.2	10.6	6.8	6.8	7.6	8.2	4.8	4.8	5.6	6.2
140.0	9.4	9.4	9.4		8.8	8.8	9.2	9.8	6.0	6.0	6.6	7.2	4.0	4.0	4.8	5.4
145.0	8.8	8.8	8.8		7.8	7.8	8.4	8.8	5.2	5.2	5.8	6.4	3.2	3.2	4.0	4.6
150.0	8.4	8.4	8.4		7.0	7.0	7.6	8.0	4.4	4.4	5.0	5.4	2.4	2.4	3.2	3.8
155.0	8.0	8.0	8.0		6.4	6.4	6.8	7.2	3.8	3.8	4.2	4.6			2.4	3.0
160.0	7.6	7.6	7.6		5.6	5.6	6.0	6.4	3.0	3.0	3.6	4.0				2.2
165.0	7.2	7.2	7.2			4.8	5.4	5.6	2.4	2.4	3.0	3.2				
170.0	6.8	6.8				4.2	4.6	4.8			2.2	2.6				
175.0	6.2	6.2				3.6	4.0					2.0				
180.0						3.0	3.4									
185.0						2.4	2.8									
190.0							2.2									

THIS CHART IS ONLY A GUIDE AND SHOULD NOT BE USED TO OPERATE THE CRANE.
The individual crane's load chart, operating instructions and other instructional plates must be read and understood prior to operating the crane

Load charts

Main boom and bi-fold swingaway

46m - 78.5 m (150.8 ft -257.5 ft)

17.8 m (58.4 ft)

7,8 m (25.6 ft)

360°

35.5 t (78,200 lb)

Pounds x 1000

Feet	150.8 - 151.8				200.8 - 201.4				229.5				257.5			
	5.9 + 52.5				5.9 + 52.5				5.9 + 52.5				5.9 + 52.5			
	0°	*0°-15°	*15°-30°	*30°-50°	0°	*0°-15°	*15°-30°	*30°-50°	0°	*0°-15°	*15°-30°	*30°-50°	0°	*0°-15°	*15°-30°	*30°-50°
35.0	17.0															
40.0	17.0															
45.0	17.0															
50.0	16.8	14.2			13.8											
55.0	16.4	14.0			13.8				10.0							
60.0	16.0	13.6			13.8				10.0							
65.0	15.6	13.4			13.8				10.0							
70.0	15.2	13.2	11.6		13.8	12.4			10.0				8.0			
75.0	15.0	12.8	11.4	9.6	13.8	12.2			10.0	10.0			8.0			
80.0	14.6	12.6	11.2	9.4	13.6	12.2	10.8		10.0	10.0			8.0			
85.0	14.2	12.4	11.0	9.2	13.4	12.0	10.8		10.0	10.0			8.0			
90.0	14.0	12.2	10.8	9.0	13.2	11.8	10.6	9.2	10.0	10.0	9.8		8.0	8.0		
95.0	13.6	12.0	10.4	9.0	13.0	11.6	10.6	9.2	10.0	10.0	9.8		8.0	8.0		
100.0	13.4	11.8	10.2	8.8	12.8	11.4	10.4	9.0	10.0	10.0	9.6	9.0	8.0	8.0	8.0	
105.0	13.0	11.6	10.0	8.8	12.6	11.4	10.4	9.0	10.0	10.0	9.6	9.0	8.0	8.0	8.0	
110.0	12.8	11.4	9.8	8.6	11.6	11.2	10.2	8.8	10.0	10.0	9.6	8.8	8.0	8.0	8.0	
115.0	12.6	11.2	9.6	8.6	11.0	10.2	10.2	8.8	10.0	10.0	9.4	8.8	8.0	8.0	8.0	8.0
120.0	12.2	11.0	9.4	8.6	11.0	10.0	10.0	8.8	10.0	10.0	9.4	8.8	8.0	8.0	8.0	8.0
125.0	11.6	10.6	9.4	8.4	10.8	9.8	9.6	8.6	9.8	9.8	9.4	8.6	7.8	7.8	8.0	8.0
130.0	10.6	10.4	9.2	8.4	10.4	9.6	9.0	8.6	8.8	8.8	9.2	8.6	6.8	6.8	8.0	8.0
135.0	9.6	9.6	9.0	8.4	10.2	9.2	8.8	8.6	8.0	8.0	9.0	8.6	6.0	6.0	7.4	8.0
140.0	9.2	9.2	8.8	8.4	9.6	9.0	8.6	8.4	7.0	7.0	8.4	8.4	5.2	5.2	6.4	7.6
145.0	8.6	8.6	8.6	8.4	8.8	8.8	8.4	8.2	6.2	6.2	7.4	8.4	4.4	4.4	5.6	6.8
150.0	8.2	8.2	8.2	8.4	8.0	8.0	8.2	8.2	5.4	5.4	6.6	7.6	3.6	3.6	4.8	6.0
155.0	7.8	7.8	7.8	7.8	7.4	7.4	8.0	8.0	4.8	4.8	5.8	6.8	3.0	3.0	4.2	5.2
160.0	7.4	7.4	7.4		6.6	6.6	7.6	7.8	4.2	4.2	5.2	6.0	2.2	2.2	3.4	4.4
165.0	7.0	7.0	7.0		6.0	6.0	6.8	7.4	3.4	3.4	4.4	5.2			2.8	3.6
170.0	6.6	6.6	6.6		5.4	5.4	6.2	6.8	2.8	2.8	3.8	4.6			2.2	3.0
175.0	6.4	6.4	6.4		4.8	4.8	5.6	6.0	2.4	2.4	3.2	4.0				2.4
180.0	6.0	6.0	6.0		4.2	4.2	5.0	5.4			2.6	3.2				
185.0	5.8	5.8			3.6	3.6	4.4	4.8			2.2	2.8				
190.0	5.4	5.4			3.0	3.0	3.8	4.2				2.2				
195.0	5.0				2.6	2.6	3.2									
200.0	4.6				2.0	2.0	2.6									
205.0							2.2									

THIS CHART IS ONLY A GUIDE AND SHOULD NOT BE USED TO OPERATE THE CRANE.
The individual crane's load chart, operating instructions and other instructional plates must be read and understood prior to operating the crane

Load charts

Main boom and bi-fold swingaway

46m - 78.5 m (150.8 ft -257.5 ft)

11,2 m (36.7 ft)

7,8 m (25.6 ft)

360°

21 t (46,200 lb)

Pounds x 1000

Feet	150.8 - 151.8				200.8 - 201.4				229.5				257.5			
	5.9 + 30.8				5.9 + 30.8				5.9 + 30.8				5.9 + 30.8			
	0°	*0°-15°	*15°-30°	*30°-50°	0°	*0°-15°	*15°-30°	*30°-50°	0°	*0°-15°	*15°-30°	*30°-50°	0°	*0°-15°	*15°-30°	*30°-50°
30.0	37.4															
35.0	37.4															
40.0	36.4	31.4														
45.0	35.4	30.4			24.0											
50.0	34.2	29.6	24.8		24.0											
55.0	31.8	28.8	24.2	19.0	24.0				14.4				11.0			
60.0	27.6	27.6	23.2	18.6	22.0	22.0	21.4		14.4	14.4			11.0			
65.0	24.0	24.0	22.4	18.2	18.8	18.8	20.8		14.4	14.4			11.0			
70.0	21.0	21.0	21.6	18.0	17.0	17.0	18.0	18.4	14.4	14.4			11.0			
75.0	19.8	19.2	19.8	17.6	17.0	17.0	16.8	17.0	14.4	14.4	14.4	14.4	11.0	11.0		
80.0	18.6	18.2	17.6	17.4	17.0	17.0	16.2	15.4	13.8	13.8	14.4	14.4	11.0	11.0	11.0	11.0
85.0	17.6	17.2	16.8	16.4	15.2	15.2	15.8	15.0	12.0	12.0	13.4	14.4	9.6	9.6	11.0	11.0
90.0	16.6	16.2	16.0	15.8	13.6	13.6	14.6	14.6	10.4	10.4	11.6	12.6	8.2	8.2	9.4	10.6
95.0	15.6	15.4	15.2	15.2	12.0	12.0	13.0	13.8	9.0	9.0	10.0	11.0	6.8	6.8	8.0	9.0
100.0	14.4	14.4	14.4	14.4	10.6	10.6	11.6	12.4	7.6	7.6	8.8	9.6	5.4	5.4	6.6	7.6
105.0	13.0	13.0	13.6	13.8	9.4	9.4	10.2	11.0	6.4	6.4	7.4	8.2	4.4	4.4	5.4	6.4
110.0	11.8	11.8	12.4	12.8	8.2	8.2	9.0	9.8	5.4	5.4	6.2	7.0	3.2	3.2	4.4	5.2
115.0	10.6	10.6	11.2	11.6	7.2	7.2	8.0	8.6	4.4	4.4	5.2	6.0	2.4	2.4	3.2	4.2
120.0	9.6	9.6	10.2	10.6	6.2	6.2	7.0	7.4	3.4	3.4	4.2	5.0			2.4	3.2
125.0	8.6	8.6	9.2	9.4	5.2	5.2	6.0	6.6	2.6	2.6	3.4	4.0				2.2
130.0	7.6	7.6	8.2	8.6	4.4	4.4	5.2	5.6			2.6	3.2				
135.0	6.8	6.8	7.2		3.8	3.8	4.4	4.8				2.4				
140.0	6.0	6.0	6.4		3.0	3.0	3.6	4.0								
145.0	5.2	5.2	5.6		2.4	2.4	2.8	3.2								
150.0	4.4	4.4	4.8				2.2	2.6								
155.0	3.8	3.8	4.0													
160.0	3.2	3.2	3.4													
165.0	2.6	2.6	2.8													
170.0	2.0	2.0														

THIS CHART IS ONLY A GUIDE AND SHOULD NOT BE USED TO OPERATE THE CRANE.
The individual crane's load chart, operating instructions and other instructional plates must be read and understood prior to operating the crane

Load charts

Main boom and bi-fold swingaway

46m - 78.5 m (150.8 ft -257.5 ft)

17.8 m (58.4 ft)

7,8 m (25.6 ft)

360°

21 t (46,200 lb)

Pounds x 1000

Feet	150.8 - 151.8				200.8 - 201.4				229.5				248.2			
	5.9 + 52.5				5.9 + 52.5				5.9 + 52.5				5.9 + 52.5			
	0°	*0°-15°	*15°-30°	*30°-50°	0°	*0°-15°	*15°-30°	*30°-50°	0°	*0°-15°	*15°-30°	*30°-50°	0°	*0°-15°	*15°-30°	*30°-50°
35.0	17.0															
40.0	17.0															
45.0	17.0															
50.0	16.8	14.2			13.8											
55.0	16.4	14.0			13.8				10.0							
60.0	16.0	13.6			13.8				10.0				8.6			
65.0	15.6	13.4			13.8				10.0				8.6			
70.0	15.2	13.2	11.6		13.8	12.4			10.0				8.6			
75.0	15.0	12.8	11.4	9.6	13.8	12.2			10.0	10.0			8.6			
80.0	14.6	12.6	11.2	9.4	13.0	12.2	10.8		10.0	10.0			8.6	8.6		
85.0	14.2	12.4	11.0	9.2	11.2	11.2	10.8		10.0	10.0			8.6	8.6		
90.0	13.6	12.2	10.8	9.0	11.0	10.8	10.6	9.2	10.0	10.0	9.8		8.6	8.6		
95.0	12.4	12.0	10.4	9.0	11.0	10.8	10.4	9.2	10.0	10.0	9.8		8.6	8.6	8.6	
100.0	12.2	11.0	10.2	8.8	11.0	10.6	10.0	9.0	8.8	8.8	9.6	9.0	7.2	7.2	8.6	
105.0	12.0	10.8	10.0	8.8	10.4	10.4	9.8	9.0	7.6	7.6	9.4	9.0	6.2	6.2	8.0	8.6
110.0	11.8	10.8	9.8	8.6	9.2	9.2	9.8	8.8	6.4	6.4	8.2	8.8	5.0	5.0	6.8	8.4
115.0	11.4	10.6	9.4	8.6	8.2	8.2	9.6	8.6	5.4	5.4	7.0	8.6	4.0	4.0	5.8	7.4
120.0	10.6	10.4	9.2	8.6	7.2	7.2	8.6	8.6	4.6	4.6	6.0	7.4	3.2	3.2	4.8	6.2
125.0	9.6	9.6	9.2	8.4	6.4	6.4	7.6	8.6	3.8	3.8	5.2	6.4	2.4	2.4	4.0	5.2
130.0	8.8	8.8	9.0	8.4	5.6	5.6	6.8	7.8	3.0	3.0	4.4	5.4			3.0	4.4
135.0	8.0	8.0	8.8	8.4	4.8	4.8	6.0	6.8	2.2	2.2	3.6	4.6			2.4	3.6
140.0	7.2	7.2	8.0	8.4	4.0	4.0	5.2	6.0			2.8	3.8				2.8
145.0	6.6	6.6	7.4	7.8	3.4	3.4	4.4	5.2			2.0	3.0				
150.0	5.8	5.8	6.6	7.2	2.8	2.8	3.8	4.6				2.4				
155.0	5.2	5.2	5.8	6.4	2.2	2.2	3.2	3.8								
160.0	4.4	4.4	5.2				2.6	3.2								
165.0	4.0	4.0	4.4					2.6								
170.0	3.4	3.4	3.8					2.0								
175.0	2.8	2.8	3.2													
180.0	2.4	2.4	2.8													

THIS CHART IS ONLY A GUIDE AND SHOULD NOT BE USED TO OPERATE THE CRANE.
The individual crane's load chart, operating instructions and other instructional plates must be read and understood prior to operating the crane

46m - 78.5 m (150.8 ft -257.5 ft) | 33,8 m (110.9 ft) | 7,8 m (25.6 ft) | 360° | 80 t (176,000 lb)

Pounds x 1000

Feet	150.8				200.8				236.2			
	26.2 + 84.6				26.2 + 84.6				26.2 + 84.6			
	0°	*0°-15°	*15°-30°	*30°-50°	0°	*0°-15°	*15°-30°	*30°-50°	0°	*0°-15°	*15°-30°	*30°-50°
50.0	8.2											
55.0	8.2											
60.0	8.2				6.4							
65.0	8.2				6.4							
70.0	8.2				6.4							
75.0	8.2	8.2			6.4				4.4			
80.0	8.2	8.2			6.4				4.4			
85.0	8.2	8.0			6.4				4.4			
90.0	8.2	7.8			6.4	6.4			4.4			
95.0	8.2	7.6	6.8		6.4	6.4			4.4			
100.0	8.2	7.4	6.6		6.4	6.4			4.4	4.4		
105.0	8.0	7.2	6.4		6.4	6.4	5.8		4.4	4.4		
110.0	7.8	7.0	6.4		6.4	6.4	5.8		4.4	4.4		
115.0	7.6	6.8	6.2	5.6	6.4	6.4	5.8		4.4	4.4		
120.0	7.2	6.6	6.0	5.6	6.4	6.4	5.8		4.4	4.4	4.2	
125.0	7.0	6.4	6.0	5.4	6.4	6.4	5.8	4.2	4.4	4.4	4.2	
130.0	6.8	6.2	5.8	5.4	6.4	6.2	5.8	4.2	4.4	4.4	4.2	
135.0	6.6	6.0	5.6	5.4	6.4	6.2	5.6	4.2	4.4	4.4	4.2	2.8
140.0	6.6	6.0	5.6	5.2	6.4	6.0	5.6	4.2	4.4	4.4	4.2	2.8
145.0	6.4	5.8	5.4	5.2	6.4	6.0	5.4	4.2	4.4	4.4	4.2	2.8
150.0	6.2	5.6	5.2	5.0	6.4	5.8	5.4	4.2	4.4	4.4	4.2	2.8
155.0	6.0	5.4	5.2	5.0	6.2	5.6	5.4	4.2	4.4	4.4	4.2	2.8
160.0	5.8	5.4	5.0	5.0	6.0	5.6	5.2	4.2	4.4	4.4	4.2	2.8
165.0	5.6	5.2	5.0	4.8	6.0	5.4	5.2	4.2	4.4	4.4	4.2	2.8
170.0	5.4	5.0	4.8	4.8	5.8	5.4	5.0	4.2	4.4	4.4	4.2	2.8
175.0	5.4	5.0	4.8	4.8	5.6	5.2	5.0	4.2	4.4	4.4	4.2	2.8
180.0	5.2	4.8	4.6	4.6	5.6	5.2	4.8	4.2	4.4	4.4	4.2	2.8
185.0	5.0	4.8	4.6	4.6	5.4	5.0	4.8	4.2	4.4	4.4	4.2	2.8
190.0	5.0	4.6	4.4	4.4	5.4	5.0	4.6	4.2	4.4	4.4	4.2	2.8
195.0	4.8	4.6	4.4	4.4	5.2	4.8	4.6	4.2	4.4	4.4	4.2	2.8
200.0	4.6	4.4	4.4	4.4	5.2	4.8	4.6	4.2	4.4	4.4	4.2	2.8
205.0	4.6	4.4	4.2		5.0	4.6	4.4	4.2	4.4	4.4	4.2	2.8
210.0	4.4	4.2	4.2		4.8	4.6	4.4	4.2	4.4	4.4	4.2	2.8
215.0	4.4	4.2	4.2		4.8	4.4	4.4	4.2	4.4	4.4	4.2	2.8
220.0	4.2	4.0	4.0		4.6	4.4	4.2	4.2	4.4	4.2	4.2	2.8
225.0	4.2	4.0	4.0		4.6	4.4	4.2	4.2	4.4	4.2	4.0	2.8
230.0	4.0	4.0	4.0		4.6	4.2	4.2	4.2	4.2	4.0	4.0	2.8
235.0	4.0	3.8	3.8		4.4	4.2	4.2	4.2	4.2	4.0	4.0	2.8
240.0	3.8	3.8			4.4	4.2	4.0		4.0	4.0	3.8	2.8
245.0	3.8				4.2	4.0	4.0		4.0	3.8	3.8	2.8
250.0					4.2	4.0	4.0		3.8	3.8	3.6	2.8
255.0					4.0	4.0	4.0		3.6	3.6	3.6	2.8
260.0					3.6	3.6	3.8		3.6	3.6	3.6	2.8
265.0					3.2	3.2	3.6		3.4	3.4	3.4	
270.0					2.8	2.8	3.4		3.2	3.2	3.2	
275.0					2.4	2.4	2.8		2.8	2.8	3.0	
280.0							2.4		2.4	2.4	2.8	
285.0										2.0	2.6	

THIS CHART IS ONLY A GUIDE AND SHOULD NOT BE USED TO OPERATE THE CRANE.
The individual crane's load chart, operating instructions and other instructional plates must be read and understood prior to operating the crane

Specifications

Superstructure

Boom
13,4 m to 78,5 m (44 ft to 257.5 ft) eight-section TWIN-LOCK boom. Maximum tip height 81,0 m (266 ft).

Boom elevation
1 cylinder with safety valve, boom angle from -1.5° to +82°.

Load moment and independent anti-two-block system
Load moment and independent anti-two-block system with audio visual warning and control lever lock-out. These systems provide graphic display of boom angle, length, radius, tip height, relative load moment, maximum permissible load, load indication and warning of impending two-block condition with lock-out hoist function.

Cab
Aluminium, full vision, tiltable (approx. 20°), safety glass, adjustable operator's seat with suspension, engine-independent heater. Armrest-integrated crane controls. Ergonomically arranged instrumentation and crane operating controls.

Slewing
3 slewing gears with axial piston motors, planetary gears, automatic brake.

Counterweight
80 t (176,300 lb), consisting of various sections (50 t [110,200 lb] within 3,00 m [9.84 ft] vehicle width). Hydraulic removal system.

Hydraulic system
2 separate circuits, 1 axial piston variable displacement pump with electronic power limiting control and axial piston variable displacement pump for slewing. Thermostatically controlled oil cooler. Tank capacity: 890 l (235 gallons).

Control system
Full electronic control of all crane movements using electrical control levers with automatic reset to zero. Integrated with the RCL and engine management system by CANbus. Crane Control System (CCS) with system with graphic display.

Hoist
Axial piston motor with planetary gear and brake. Drum rotation indicator. Hoist camera with light.

Optional equipment*

- Bi-fold swingaway, 11/18 m (37/58 ft) with hydraulic offset and luffing under load (5° – 50°), controlled from the crane cab
- 8 m (26 ft) boom and 8 m (26 ft) jib extensions (maximum total length 33,8 m [111 ft])
- Auxiliary hoist, self-rigging via counterweight
- Auxiliary boom nose using one part of line
- Auxiliary boom nose using two parts of line
- Air conditioning system
- 2,0 m (6.6 ft) side-stowed stub jib using 4 parts of line. Offset 8° and 30°

Carrier

Chassis
Special five-axle chassis, all-welded torsion-resistant box type construction in high-strength steel.

Outriggers
4 double hydraulically telescoping beams with vertical cylinders and outrigger pads. Independent horizontal and vertical movement control on each side of the carrier and from the operator's cab. Electronic level indicator with automatic leveling system.

Engine
Mercedes-Benz OM471LA, diesel, six cylinders, water-cooled, turbocharged, 390 kW (532 hp) at 1700 rpm (80/1269 EWG fan loose). Max. torque: 2460 Nm (1814 ft lb) at 1300 rpm. Fuel tank: 300 l + 350 l (79 + 92,5 gallons).
Engine emission: Euromot 5/EPA/CARB Tier 4 final (non-road).

Transmission
Mercedes-Benz G 280, 16 gears forward and 2 reverse. 2 stage transfer case with longitudinal locks and water retarder.

Drive/Steer
10 x 6 x 10

Axle lines
5 axle lines; axle lines 2, 4 and 5 steered and driven; axle lines 1 and 3 steered.

Suspension
MEGATRAK®. All wheels with independent hydropneumatic suspension and hydraulic lockout. Longitudinal and transverse level control with automatic on-highway leveling system. Range +170 mm/-130 mm (6.69 in/-5.12 in). Active suspension control on outrigger control units.

Tires
10 tires, size 385/95 R25 (14.00 R25).

Steering
Dual-circuit, hydraulic power-assisted steering with emergency steering pump. Axle lines 1, 2, 3 and 5 steer on highway (steer by wire). Separate electronic hydraulic (steer by wire) steering of axle lines 4 and 5 for all-wheel steering and crabbing.

Brakes
Service brake: pneumatic dual circuit disc brakes acting on all wheels, air dryer. Permanent brake: exhaust brake and constant throttle brake. Parking brake: pneumatically operated spring-loaded brake acting on axle lines 2, 3, 4 and 5.

Driver's cab
Composite-designed aluminum and fibre-reinforced plastic, 2-person design, safety glass, driver seat with pneumatic suspension, engine-dependent hot water heater. Complete instrumentation and driving controls. Air conditioned. 12 V plug. Two rotating beacons. Fire extinguisher. Additional engine-independent diesel cab heater, also serves as engine preheater incl. 24-hr timer.

Electrical system
Three-phase alternator 28 V/100A, 2 batteries 12 V/170 Ah. Lighting system and signals 24 V.

Optional equipment*

- 10 x 8 x 10
- 10 tires, size 445/95 R25 (16.00 R25)
- 10 tires, size 525/80 R25 (20.5 R25)
- Vehicle width 3,10 m (10.17 ft)
- Folding bunk bed in carrier cab
- MAXbase variable outrigger positioning
- Reverse camera system
- CraneSTAR telematics system
- VIAB turbo clutch

* Other optional equipment on request.

Symbols glossary

Axles

Counterweight

Auxiliary hoist

Slewing/working range

Block height

Crane functions

Hook block/capacity

Speed

Boom

Crane travel

Hydraulic system

Suspension

Boom elevation

Drive/steer

Lattice extension

Tires

Boom telescoping

Electrical system

Lattice extension (luff-ing)

Transmission/gear

Brakes

Engine

Luffing jib

Travel speed

Cab

Gradeability

Outriggers

Carrier frame

Main hoist

Radius

Manitowoc Cranes

Regional headquarters

Americas
Milwaukee, Wisconsin, USA
Tel: +1 414 760 4600

Shady Grove, Pennsylvania, USA
Tel: +1 717 597 8121

Europe and Africa
Dardilly, France - TOWERS
Tel: +33 (0) 4 72 18 20 20

Wilhelmshaven, Germany - MOBILE
Tel: +49 (0) 4421 294 0

APAC
Shanghai, China
Tel: +86 21 6457 0066

Singapore
Tel: +65 6264 1188

Middle East and India
Dubai, UAE
Tel: +971 4 8862677

Manitowoc Crane Care™

Manitowoc Finance™

This document is non-contractual. Constant improvement and engineering progress make it necessary that we reserve the right to make specification, equipment, and price changes without notice. Illustrations shown may include optional equipment and accessories and may not include all standard equipment.

©2021 The Manitowoc Company, Inc.

Form No. GMK5250XL-1
Part No. 20-006/1M/0321

www.manitowoc.com