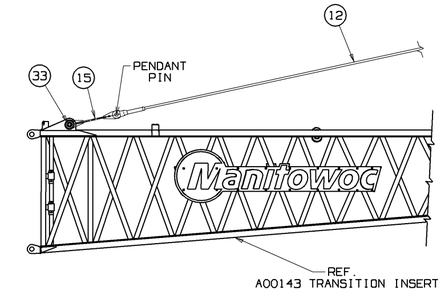

15° JIB ANGLE

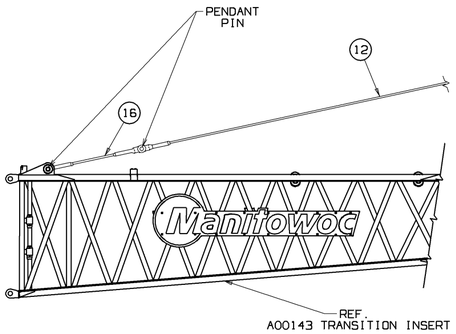

30° JIB ANGLE

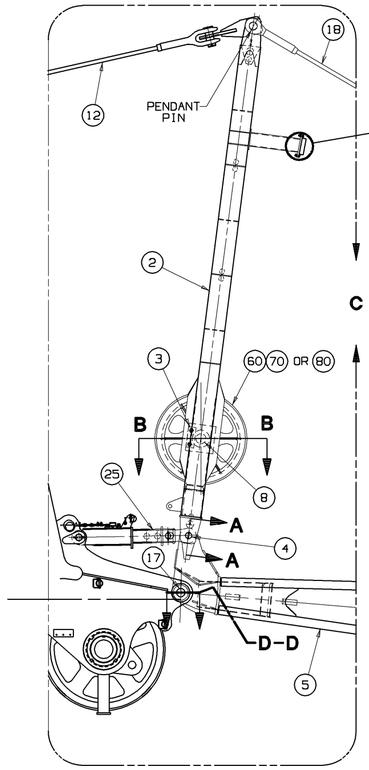

VIEW C

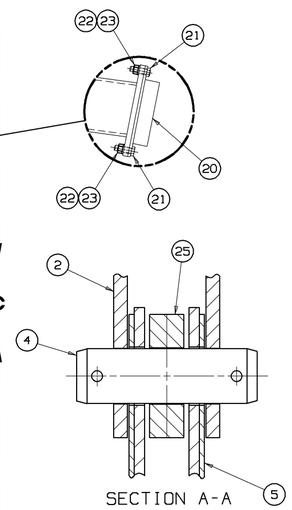

SECTION A-A

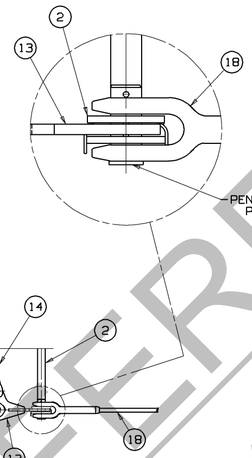

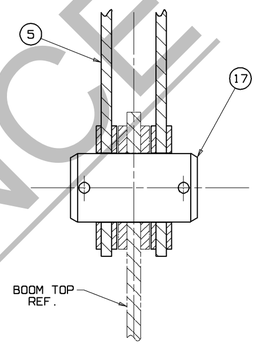

SECTION D-D

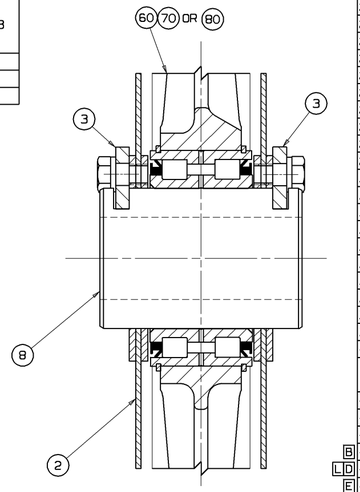

SECTION B-B

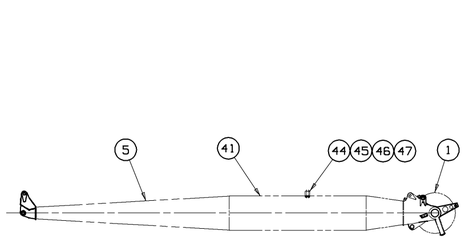

VIEW OF 30 FT JIB

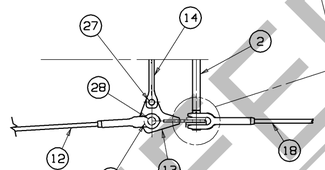

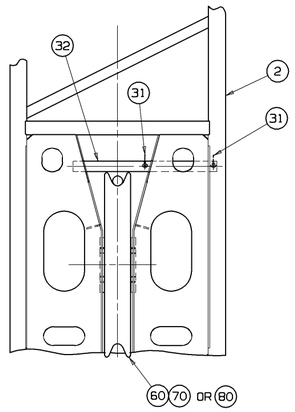

VIEW E-E
SCALE: 1.50=1FT

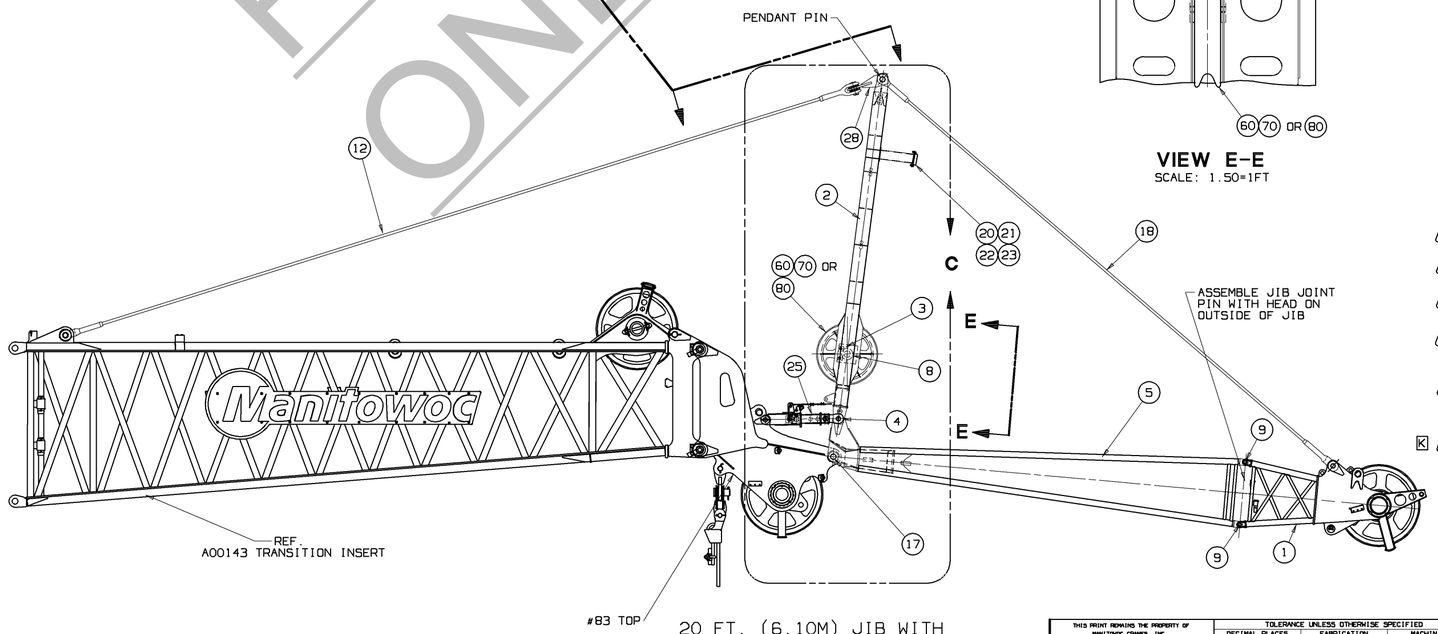

20 FT. (6.10M) JIB WITH 5° JIB ANGLE SHOWN

REQUIRED FOR VARIOUS JIB LENGHTS (4)

DESCRIPTION							
JIB LENGTH			INSERT 10 FT-00 (3.05 M) ITEM 41	INSERT 20 FT-00 (6.10 M) ITEM 48	PENDANT 9 FT-6.00 (2.89 M) ITEM 42	PENDANT 19 FT-00 (5.79 M) ITEM 49	PIN JIB JOINT ITEM 43 OR 50	TIMBER ITEM 44 OR 51
FEET	METERS							
30	9.14		1	0	2	0	4	1
40	12.19		2	0	4	0	8	2
		OR	0	1	0	2	4	
50	15.24		1	1	2	2	8	3
		OR	3	0	6	0	12	
60	18.29		0	2	0	4	8	4
		OR	2	1	4	2	12	
70	21.33		1	2	2	4	12	5
		OR	3	1	6	2	16	

REQUIRED FOR VARIOUS JIB ANGLES

DESCRIPTION				
JIB ANGLE	PENDANT .362 IN (9.19 M) ITEM 12	PENDANT 4 FT-8.00 (1.42 M) ITEM 16	LINK 28.00 (711 mm) ITEM 15	PIN ITEM 33
5°	2	0	0	0
15°	2	0	2	2
30°	2	2	0	0

BILL OF MATERIAL

ITEM NO.	NO. REQD.	DESCRIPTION	MATERIAL	CODE NO. OR DWG. NO.	ASSEMBLIES USED ON
		FIXED JIB ASSEMBLY #134A - MODEL 1015			
1	1	TOP 5FT ASSEMBLY (1.52m)		A01835	
2	1	STRUT 12 FT-6 (3.81 m)		A01797 5	
3	2	KEEPER		169810	
4	2	PIN		170851	
5	1	JIB BUTT 15 FT-0 (4.57m)		177054	
6					
7					
8	1	PIN		177219	
9	4	PIN		76225	
10					
11					
12	2	PENDANT 30 FT-2.00 (9.19m)		A05325 2	
13	2	LINK		177295	
14	1	LINK		177296	
15	2	LINK 28-0 IN. (711mm)		177298	
16	2	PENDANT 4 FT-8.00 (1.42m)		277431 1	
17	2	PIN HINGE		177397	
A 18	2	PENDANT 1.125 DIA X 260 IN LG		A05324 3	
19	4	SPACER		196278	
20	2	RUBBER BUMPER		285220	
21	4	SCR. HEX..375-16 UNC-2A X 1.25 LG. GR.5		612456	
22	4	NUT HEX .375-16 UNC-2B		546054	
23	4	WASHER, LOCK .375Ø		710304	
24					
25	1	JIB STOP ASSY		179332	
26					
27	2	PIN		177301	
28	2	PIN		177303	
29					
30					
31	2	PIN, SNAP		563823	
32	1	GUARD WIRE ROPE		A02066	
33	2	PIN		177302	
34					
35					
36					
37					
38					
39					
40					
		10 FT INSERT (3.04m)			
41	1	INSERT- 10 FT-0 (3.05m)		32938	
42	2	PENDANT 9 FT-0 (2.89m)		276729 1	
43	4	PIN- JIB JOINT		76225	
B 44	1	TIMBER 27.00 LG X 3.50 W		81017676	
LD 45	4	HHCS 5/8-11UNC X 5.00 GR 5		612685	
E 46	8	WASHER FLAT .625		709747	
F 47	4	HEX LOCK NUT 5/8-11UNC Gr5.2		7660201601	
		20 FT INSERT (6.09m)			
48	1	INSERT- 20 FT-0 (6.09m)		176938	
49	2	PENDANT 19 FT-0 (5.79m)		277422 1	
50	4	PIN- JIB JOINT		76225	
C 51	2	TIMBER 27.00 LG X 3.50 W		81017676	
MG 52	8	HHCS 5/8-11UNC X 5.00 GR 5		612685	
H 53	16	WASHER FLAT .625		709747	
J 54	8	HEX LOCK NUT 5/8-11UNC Gr5.2		7660201601	
		OPTION 1 -FOR 1.125 WIRE ROPE			
60	1	SHEAVE ASSEMBLY FOR 1.125 WIRE ROPE		176799	
		OPTION 2 -FOR 32mm WIRE ROPE			
70	1	SHEAVE ASSEMBLY FOR 32mm WIRE ROPE		A04595	
		OPTION 3 -FOR 38mm WIRE ROPE			
80	1	SHEAVE ASSEMBLY FOR 38mm WIRE ROPE		A04593	

REVISIONS

10-28-02 TMO
A WAS 362 IN.
06-08-10 JAS
UPDATED BOOM SIGN
09-23-11 RDA
B C WAS 192028
D E F G H J
ADDED
K ADDED
10-18-11 RDA
L M WAS
7115204050

1. ON DWG. A02422
2. ON DWG. A05326
3. ON DWG. A02308
4. INSERTS AND CORRESPONDING PENDANTS MUST BE INSTALLED IN ORDER OF ASCENDING LENGTH STARTING AT JIB BUTT.
5. STRUT 177131 CAN BE USED IN PLACE OF STRUT A01797. GUARD WIRE ROPE A02066 AND PIN SNAP 563823 USE OF 177131 REQUIRES THAT THE WEDGE SOCKET BE REMOVED FROM THE LOADLINE TO REEVE.
6. K ATTACH TIMBERS SO THEY ARE FREE TO SLIDE UNDER THERMAL EXPANSION/CONTRACTION OF PLASTIC.

REFERENCE ONLY!

THIS PRINT REMAINS THE PROPERTY OF MANITOWOC CRANES, INC. ALL INFORMATION CONTAINED THEREON IS CONFIDENTIAL. IT IS LOANED, SUBJECT TO RETURN UPON DEMAND, AND ON EXPRESS CONDITION THAT IT IS NOT TO BE COPIED OR USED DIRECTLY OR INDIRECTLY IN ANY WAY WHATSOEVER DETRIMENTAL TO OUR INTERESTS.

TOLERANCE UNLESS OTHERWISE SPECIFIED			
DECIMAL PLACES	FABRICATION ≤ 10 FEET	FABRICATION > 10 FEET	MACHINING
(1) PLACE 0.0	±.12	±.18	±.03
(2) PLACE 0.00	±.06	±.12	±.015
(3) PLACE 0.000			±.005
ANGLES	±1°30'		±0°30'

MACHINING TOLERANCE APPLIES TO ALL DIMENSIONS NOT ON MACHINE SURFACE

SCALE .38=1FT
DR. ER
CK. CRP
MODEL 1015
APP TSC

Manitowoc Cranes, Inc.
Manitowoc, Wisconsin

JIB ASSEMBLY
#134A JIB
FOR #83HD BOOM

DWG. NO. A01833

PRIVATE LABELING REQUIREMENT TO CONFORM TO ENGINEERING SPECIFICATION 6929103794 FOR COMPONENTS LISTED IN GDS500-05-035

DATE 9-12-02
PATTERN NO.

DWG. NO. A01833

DO NOT SCALE THIS DRAWING