TABLE "A"				
REQ'D FOR VARIOUS JIB LENGTHS				K
DRAWING NUMBER		172679	277363 DWG. 169377	193273 WIRE ROPE TIMBER GUARD OPTIONAL
JIB LENGTH		20 FT INSERT (6.1m)	19 FT-2.00 PENDANT (5.8m)	
FEET	METERS			
60	18.3	1	2	1
80	24.4	2	4	2
100	30.5	3	6	3
120	36.6	4	8	4

TABLE "B"										
REQ'D FOR VARIOUS JIB OFFSETS HEAVY LIFT TOP										
DRAWING NUMBER	3 277365 DWG.169377	LINK		2 LINK	PIN	PIN	PIN	PIN	LINK
JIB OFFSET 4	7 FT-4.00 PENDANT (2.2m)	171857	171858	171794	171867	169849	75465	170844	171761
5°	0	2	2	2	4	4	2	2	2
15°	2	0	0	0	2	C 2	2	2	2
30°	2	0	0	2	2	4	2	2	2

TABLE "C"										
REQ'D FOR VARIOUS JIB OFFSETS LONG REACH TOP										
DRAWING NUMBER	3 277365 DWG.169377	LINK		276785 DWG.73026	PIN	PIN	PIN	STRUT	2 LINK
JIB OFFSET 4	7 FT-4.00 PENDANT (2.2m)	171857	171858	6 FT-0.00 PENDANT (1.8m)	171868	171867	169849	J 192488	171794
5°	0	2	2	2	4	2	2	1	0
15°	0	0	0	2	4	0	D 4	1	2
30°	2	0	0	2	4	0	2	1	0

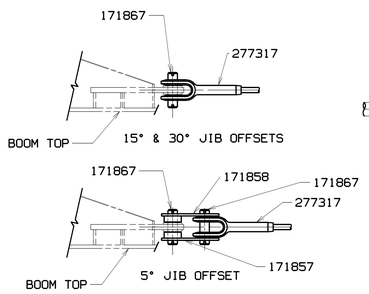

VIEW "E"-"E"

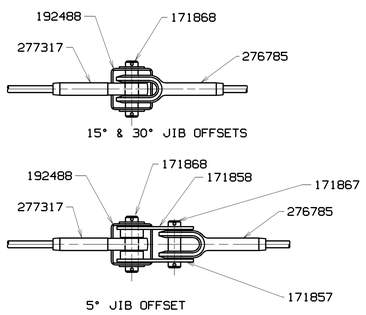

VIEW "F"-"F"

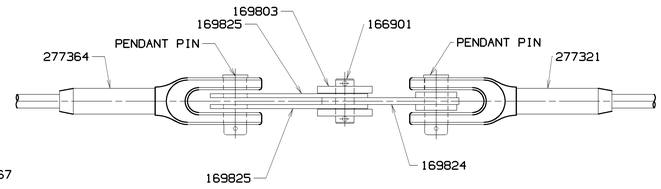

VIEW "C"-"C"

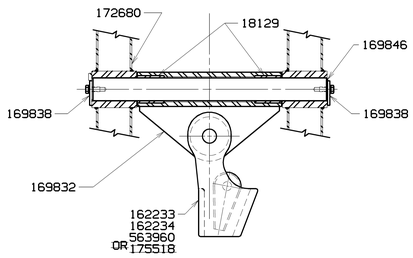

SECTION "D"-"D"
SEE 7

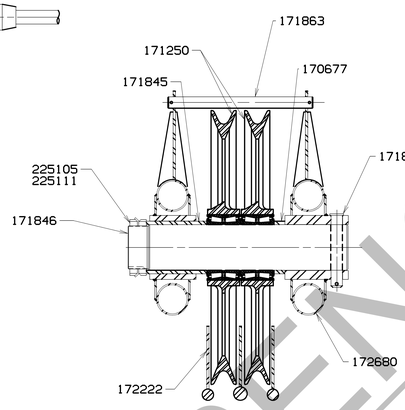

SECTION "A"-"A"

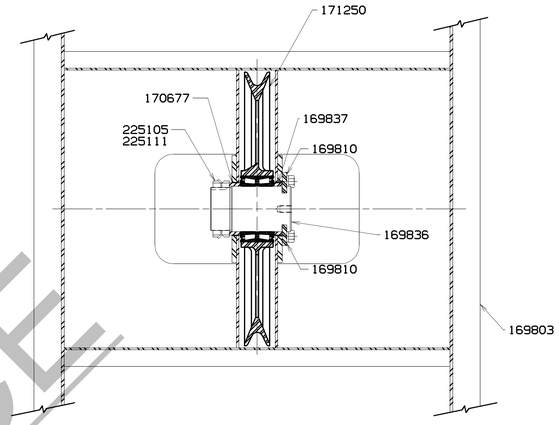

SECTION "B"-"B"

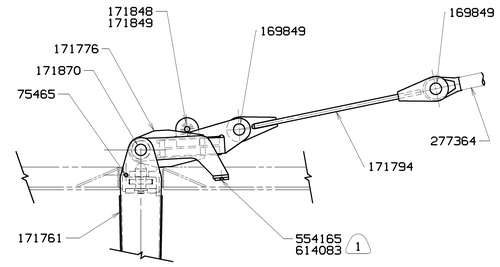

VIEW "G"

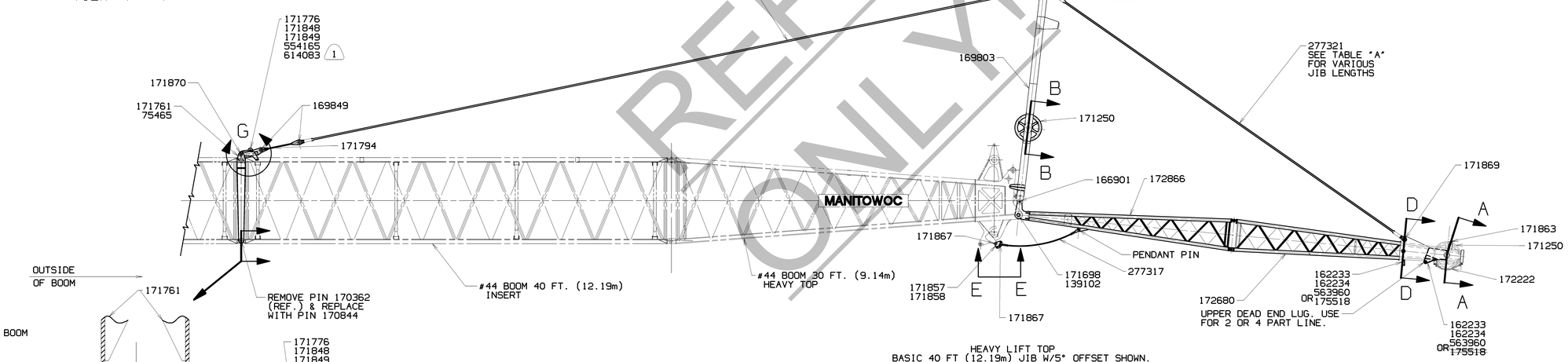

HEAVY LIFT TOP
BASIC 40 FT (12.19m) JIB W/5° OFFSET SHOWN.

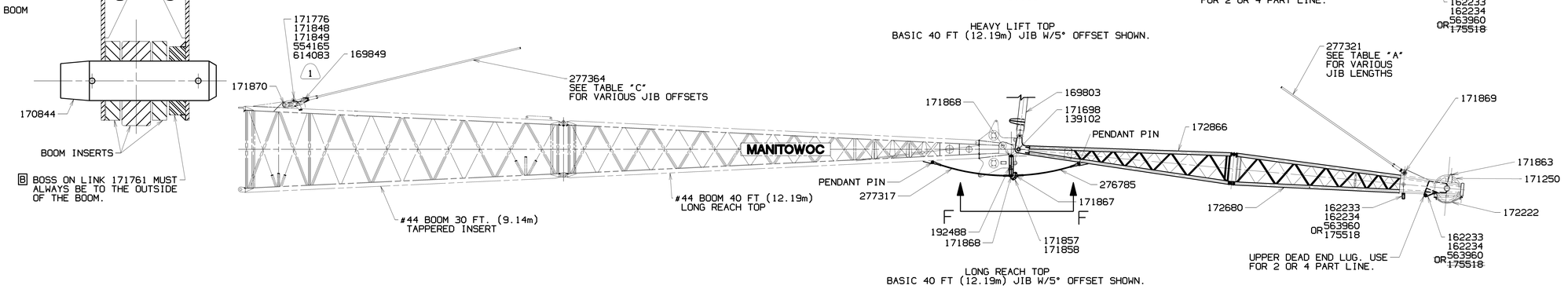

LONG REACH TOP
BASIC 40 FT (12.19m) JIB W/5° OFFSET SHOWN.

REFERENCE ONLY

BILL OF MATERIAL

ITEM NO.	NO. REQ'D	SECTION	DESCRIPTION	LENGTH IN	MATERIAL	CODE NO. OR DWG. NO.	
	2		BUSHING			18129	
	2		PIN			139102	
	1		SOCKET			162233	
	1		WEDGE			162234	
	4		PIN			166901	
	1		JIB STRUT (20 FT)-(6.1m)			169803	
	2		PIN KEEPER			169810	
	2		LINK			169824	
	4		LINK			169825	
	1		DEAD END BAIL			169832	7
	1		PIN			169836	
	1		SPACER			169837	
	2		END PLATE			169838	
	1		PIN			169846	7
	2		SPACER			170677	
	3		SHEAVE ASSEMBLY			171250	8
	2		BUSHING			171698	
	1		BACKSTAY SUPPORT			171776	
	1		SPACER			171845	
	1		SHAFT			171846	
	2		ROLLER			171848	
	1		SHAFT			171849	
	1		ROPE GUARD			171863	
	1		PIN			171864	
	2		PIN			171869	
	2		PIN			171870	
	1		ROPE GUARD			172222	
	1		JIB TOP (20 FT)-(6.1m)			172680	
	1		JIB BUTT (20 FT)-(6.1m)			172866	
	4		LOCKNUT			225105	
	2		LOCKWASHER			225111	
	2		JIB BASIC PENDANT (40 FT.)-(12.19m)			277321	5
	2		PENDANT (7 FT. - 7.00)-(2.3m)			277317	6
	2		BACKSTAY BASIC PENDANT			277364	5
	2		PAD			554165	
	1		PIN			563960	
	2		.312-18UNC-2A X .50 LG (12.7 mm)FL AL HD CAPSCR.			614083	1

ASSEMBLIES USED ON

REVISIONS

12-2-93 LS
A ADDED
1-11-94 LS
B ADDED
C WAS 4 REQ'D
D WAS 2 REQ'D
1-19-94 RAH
E MULTIPLE PART REEVING ADDED
F MULTIPLE PART AND SINGLE PART REEVING ADDED
8-7-96 DW
GH DELETED
5-16-98 DW
J WAS 171850
09-27-11 RDA
K WAS 171477
L ADDED NOTE

1. APPLY LOCKTITE 242 OR EQUAVALENT TO SCREW 614083 AT ASSEMBLY.
2. LOCATE ADJACENT TO BACKSTAY SUPPORT 171776.
3. LOCATE BETWEEN BACKSTAY LINK 171794 OR BACKSTAY SUPPORT 171776 & PENDANT 277364
4. JIB OFFSETS ARE NOMINAL.
5. ON DWG. 169377-(69 FT.-9.00)-(21.3m) LG.
6. ON DWG. 73026
7. CAN BE USED FOR DEAD END WITH 2 PART LINE. MUST BE REMOVED WHEN 2, 3 OR 4 PART LINE AND/OR UPPER DEAD END LUG IS USED.
8. 1.125 (29 mm) WIRE ROPE

E A OPTIONAL-REQ'D. FOR MULTIPLE PART REEVING WITH 28 mm DYFORM 34LR (MEC CODE NO. 719367) OR 28 mm CASAR EUROLIFT (MEC CODE NO. 719368) WIRE ROPE.

ADD

G	1	DEAD END LOCKING SWIVEL ASSEMBLY	175518 9

DELETE

	1	WEDGE SOCKET 1.125 WIRE ROPE	162233
	1	WEDGE 1.125 WIRE ROPE	162234
	1	PIN	563960

HF 9 ~~SEE ASSEMBLY DWG. FOR SWIVEL OPERATIONAL DIRECTIONS FOR MULTIPLE PART AND SINGLE PART REEVING.~~

L 10 ATTACH TIMBERS SO THEY ARE FREE TO SLIDE UNDER THERMAL EXPANSION/CONTRACTION OF PLASTIC

DWG. NO. 172692

PRIVATE LABELING REQUIREMENT TO CONFORM TO ENGINEERING SPECIFICATION 6829103794 FOR COMPONENTS LISTED IN GDS500-05-035

DATE 12-28-92

PATTERN NO.

SUPERSEDES 172692 OF 4-24-92

THIS PRINT REMAINS THE PROPERTY OF MANITOWOC CRANES, INC. ALL INFORMATION CONTAINED THEREIN IS CONFIDENTIAL. IT IS LOANED, SUBJECT TO RETURN UPON DEMAND, AND ON EXPRESS CONDITION THAT IT IS NOT TO BE COPIED OR USED DIRECTLY OR INDIRECTLY IN ANY WAY WHATSOEVER DETRIMENTAL TO OUR INTERESTS.

TOLERANCE UNLESS OTHERWISE SPECIFIED			
DECIMAL PLACES	FABRICATION ≤ 10 FEET	FABRICATION > 10 FEET	MACHINING
(1) PLACE 0.0	±.12	±.18	±.03
(2) PLACE 0.00	±.06	±.12	±.015
(3) PLACE 0.000			±.005
ANGLES	±1°30'		±0°30'

MACHINING TOLERANCE FOR 125 RMS OR FINER DESIGNATION ON THE SURFACE

SCALE 1/4=FT

DR. DJS

CK. DJS

APP TSC

Manitowoc Cranes, Inc.
Manitowoc, Wisconsin

MODEL M-250

JIB ASSEMBLY (EUROPEAN)
#132 JIB
1.50 SWAGED PENDANTS

DWG. NO. 172692

DO NOT SCALE THIS DRAWING