ITEM NO.	NO. REQ'D	SEC-TION	DESCRIPTION	LENGTH IN.	MATERIAL	CODE NO. OR DWG. NO	△
	2		PIN			139193	
	1		OUTSIDE ASSIST BRACKET			174419	
	2		LINK			174420	B
	4		WIRE ROPE CLIP			349281	7
F	~~1~~		~~MODIFICATION TO MAIN STRUT 172102~~			~~421046~~	
	1		SHACKLE			624631	7
	2		THIMBLE			682702	7
	1		.188 WIRE ROPE 50 FT. (15.24m)			719304	7A

ASSEMBLIES USED ON

REVISIONS

3-19-93 DJS
A WAS 173367
4-2-93 DJS
B MODEL NO. CORRECTED
7-14-93 DJS
C D E ADDED
F DELETED
G WAS 421046
12-9-93 LS
H ADDED

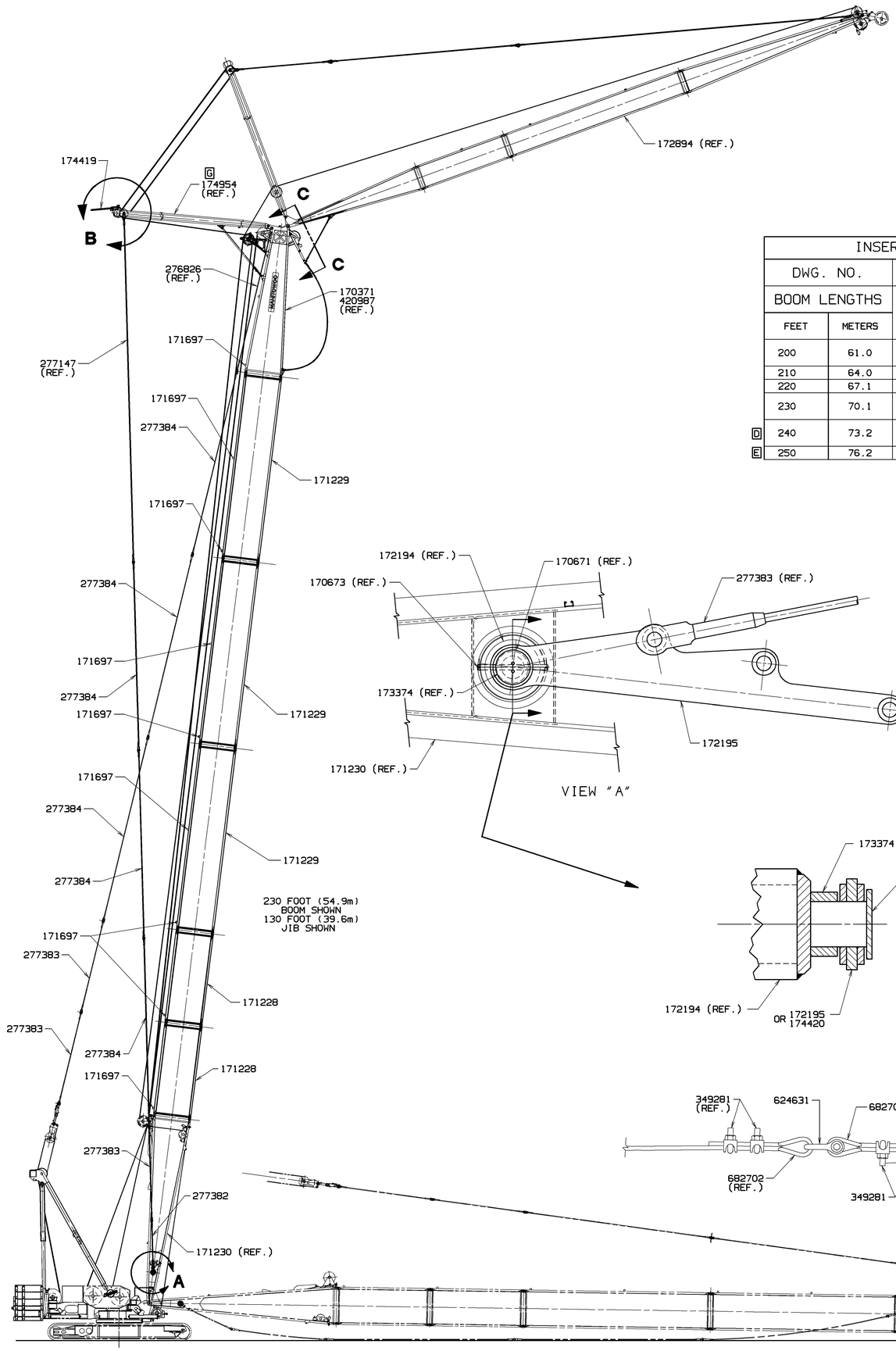

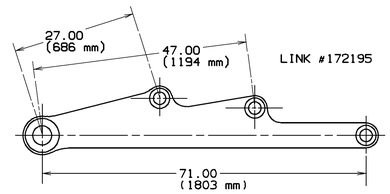

INSERTS, PENDANTS, AND TIMBERS REQ'D. FOR VARIOUS BOOM LENGTHS SEE 1												
DWG. NO.		171227	171228	A 171229	277382 DWG. 78145		277383 DWG. 78145		277384 DWG. 78145		171697	172195		666852
BOOM LENGTHS		10 FT 3.05m INSERT	20 FT 6.10m INSERT	40 FT 12.19m INSERT	INCLUDES JIB BACKSTAY PENDANTS 4						WIRE ROPE TIMBER	BACKSTAY LINK ADJUSTMENT		(OPTIONAL) PENDANT TIE DOWN STRAPS SEE 5
FEET	METERS				10 FT 1.0 3.07m PENDANT		20 FT 1.5 6.13m PENDANT		40 FT 3.0 12.27m PENDANT			INCHES	mm	
200	61.0	OR 1	2	2	4	(4/0)	8	(8/0)	14	(8/6)	7	27.00	686	24
		1	0	3	4	(4/0)	0	(0/0)	18	(12/6)	7	27.00	686	22
210	64.0	0	1	3	2	(0/2)	4	(4/0)	18	(12/6)	7	27.00	686	22
220	67.1	1	1	3	4	(4/0)	6	(4/2)	18	(12/6)	8	LINK 174420		26
230	70.1	OR 0	2	3	2	(0/2)	10	(8/2)	18	(12/6)	8			26
		0	0	4	2	(0/2)	2	(0/2)	22	(16/6)	8			24
D 240	73.2	OR 1	2	3	4	(4/0)	8	(8/0)	20	(12/8)	9			30
		1	0	4	4	(4/0)	0	(0/0)	24	(16/8)	9			28
E 250	76.2	0	1	4	2	(0/2)	4	(4/0)	24	(16/8)	9			28

1. SEE INSERT AND PENDANT NOTES ON 172894 SHEET ONE.
2. FOR BOOM BASIC PARTS, NOTES, SECTIONS, VIEWS AND BOOM LENGTHS LESS THAN 200 FEET, REFER TO RIGGING 172894 SHEETS 1 THRU 4.
3. SEE OUTSIDE ASSIST PROCEDURE #7652A FOR RAISING AND LOWERING BOOM AND JIB.
4. SHOWN IN THE FORMAT: TOTAL PENDANTS REQ'D (BOOM PENDANTS REQ'D / JIB BACKSTAY PENDANTS REQ'D)
5. SEE CRANE ASSEMBLY & RIGGING GUIDE IN THE OPERATIONS MANUAL FOR INSTRUCTIONS ON PENDANT STOWAGE.
6. FOR JIB BASIC PARTS, NOTES, SECTIONS, VIEWS AND JIB LENGTHS LESS THAN 200 FEET, REFER TO RIGGING 172894 SHEETS 1 THRU 4.
7. REFER TO JIB STOP ASSEMBLY 173017 AND VIEW "C"-"C".
C 8. LINK 174420 REPLACES LINK 172195 FOR BOOM LENGTHS 220 FT. (67.1 M) THRU 250 FT. (76.2 M).
H 9. LUFFING JIB ASSEMBLIES REQUIRING OUTSIDE ASSIST MUST HAVE 1000 FT. (304.8 M) OF JIB HOIST LINE.

VIEW "A"

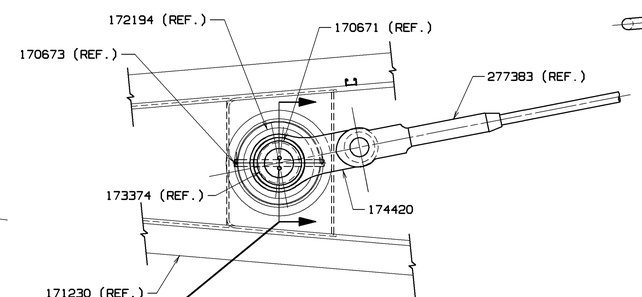

VIEW "A"

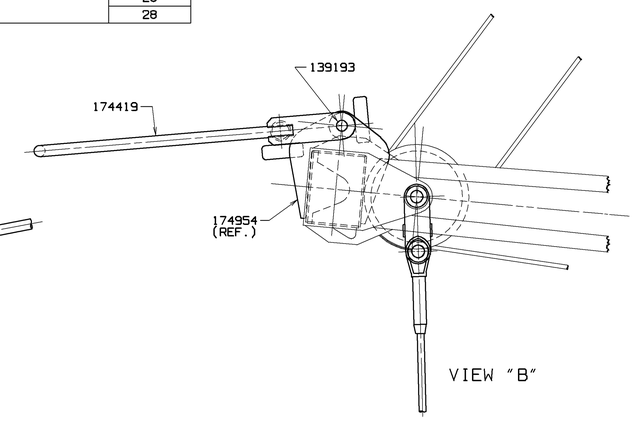

VIEW "B"

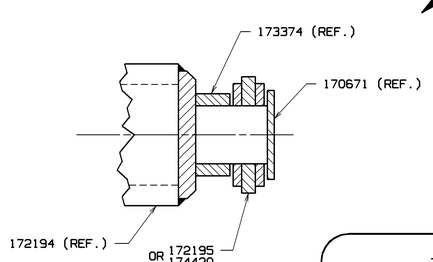

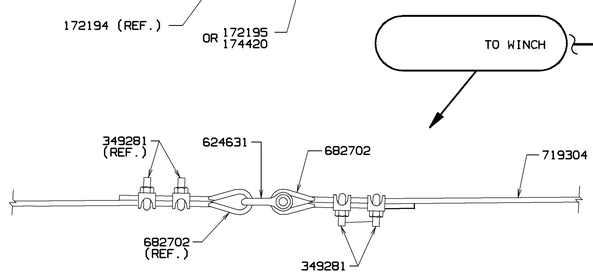

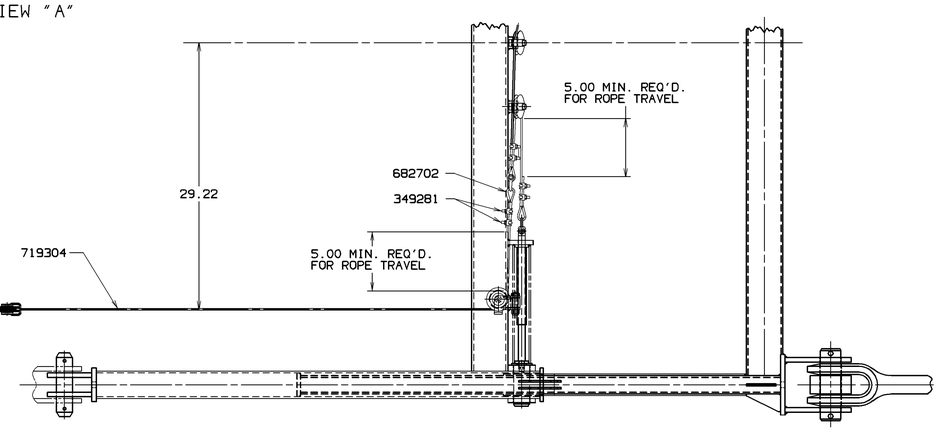

VIEW "C"-"C"

DWG. NO. 174421

THIS PRINT REMAINS THE PROPERTY OF MANITOWOC CRANES, INC. ALL INFORMATION CONTAINED THEREON IS CONFIDENTIAL. IT IS LOANED, SUBJECT TO RETURN UPON DEMAND, AND ON EXPRESS CONDITION THAT IT IS NOT TO BE COPIED OR USED DIRECTLY OR INDIRECTLY IN ANY WAY WHATSOEVER DETRIMENTAL TO OUR INTERESTS.	TOLERANCE UNLESS OTHERWISE SPECIFIED					
	DECIMAL PLACES	FABRICATION		MACHINING		
		≤ 10 FEET	> 10 FEET			
	(1) PLACE	0.0	±.120	±.180	±.030	MACHINING TOLERANCE ADDITIVE TO THE DIMENSION OF THE SURFACE
	(2) PLACE	0.00	±.060	±.120	±.015	
	(3) PLACE	0.000			±.005	
	ANGLES		±1°30'		±0°30'	

12-IT	Manitowoc Cranes, Inc.	LUFFING JIB RIGGING ASSEMBLY	
DR. DJS	Manitowoc, Wisconsin	FOR OUTSIDE ASSIST	
CK. DJS	MODEL M-250 SERIES 2 B	#44 BOOM/#133 JIB	
APP TSC		1.50 PENDANTS (USA)	

DATE 2-16-93
PATTERN NO.
DWG. NO. 174421

DO NOT SCALE THIS DRAWING