BILL OF MATERIAL						
ITEM NO. / NO. REQD.	SEC-TION	DESCRIPTION	LENGTH IN.	MATERIAL	CODE NO. OR DWG. NO.	ASSEMBLIES USED ON

REVISIONS

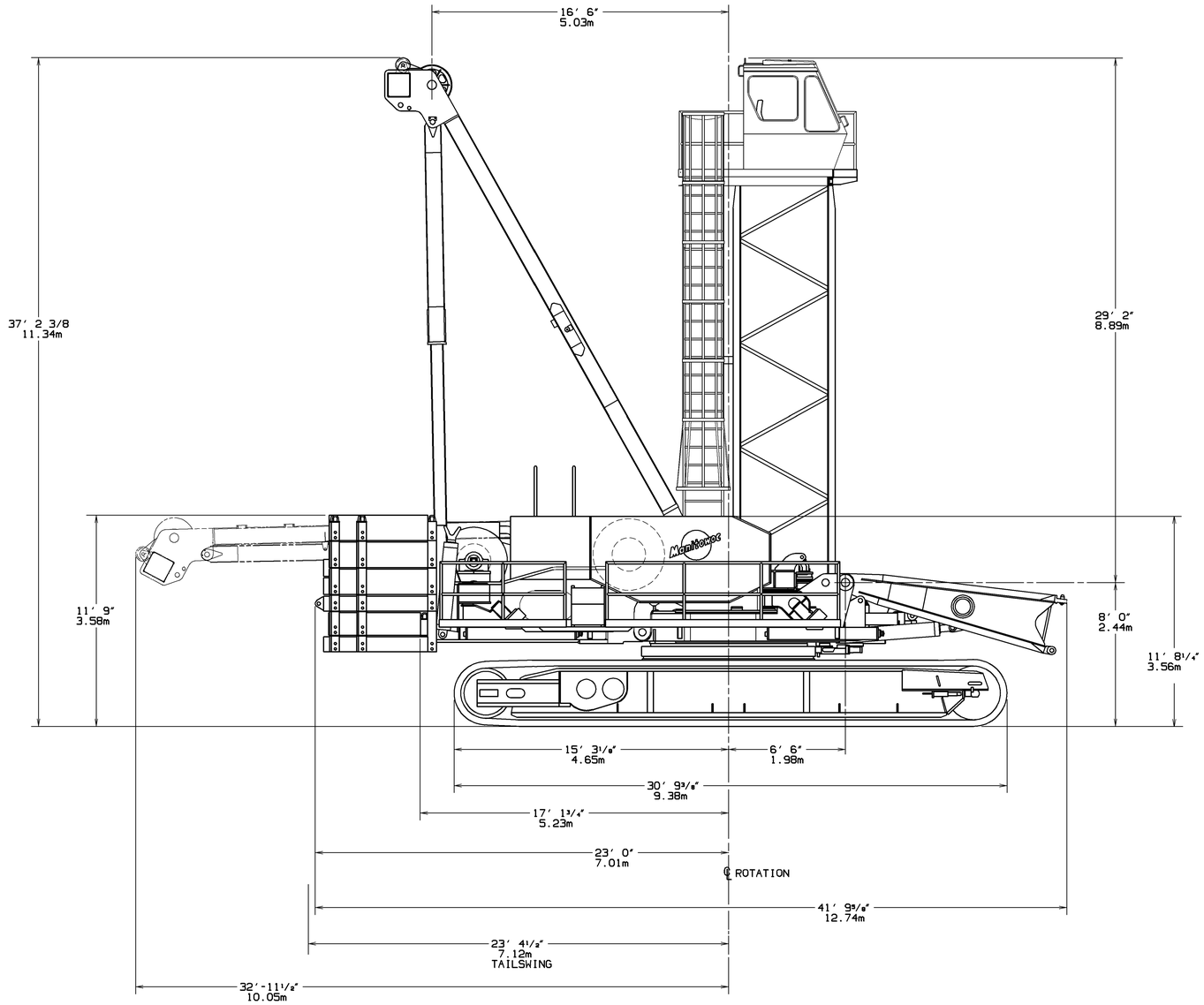

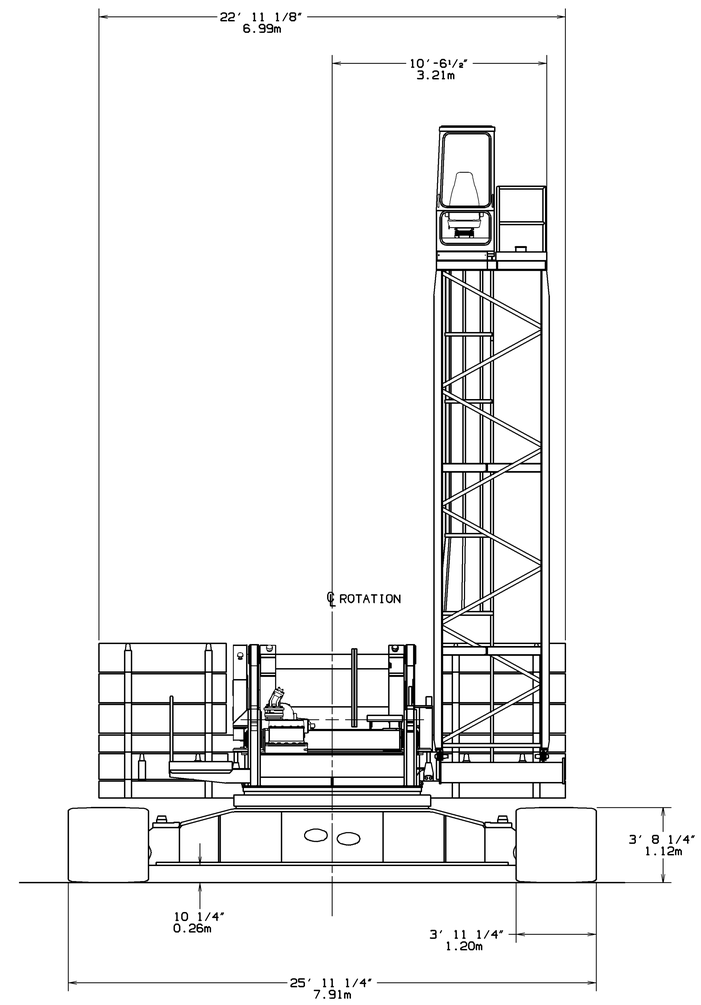

DWG. NO. 175924

DATE 5-2-94

PATTERN NO.

DWG. NO. 175924

THIS PRINT REMAINS THE PROPERTY OF MANITOWOC CRANES, INC. ALL INFORMATION CONTAINED THEREON IS CONFIDENTIAL. IT IS LOANED, SUBJECT TO RETURN UPON DEMAND, AND ON EXPRESS CONDITION THAT IT IS NOT TO BE COPIED OR USED DIRECTLY OR INDIRECTLY IN ANY WAY WHATSOEVER DETRIMENTAL TO OUR INTEREST.

TOLERANCE UNLESS OTHERWISE SPECIFIED			
DECIMAL PLACES	FABRICATION		MACHINING
	± 10 FEET	> 10 FEET	
(1) PLACE 0.0	±.120	±.180	±.030
(2) PLACE 0.00	±.060	±.120	±.015
(3) PLACE 0.000			±.005
ANGLES	±1°30′		±0°30′

MACHINING TOLERANCE APPLIES TO ALL DIMENSIONS TO THE MACHINED SURFACE

SCALE .38=1

DR. JAZ

CK. JAZ

APP GMP

Manitowoc Cranes, Inc.
Manitowoc, Wisconsin

MODEL M-250

CRANE OUTLINE
DIMENSION ASSEMBLY
35 FT. EYE LEVEL
ELEVATED OPERATORS CAB

DO NOT SCALE THIS DRAWING